US EPA ARCHIVE DOCUMENT

SUBCHAPTER C—AIR PROGRAMS

PART 50—NATIONAL PRIMARY AND SECONDARY AMBIENT AIR QUALITY STANDARDS

Sec.
50.1 Definitions.
50.2 Scope.
50.3 Reference conditions.
50.4 National primary ambient air quality standards for sulfur oxides (sulfur dioxide).
50.5 National secondary ambient air quality standard for sulfur oxides (sulfur dioxide).
50.6 National primary and secondary ambient air quality standards for PM_{10}.
50.7 National primary and secondary ambient air quality standards for particulate matter.
50.8 National primary ambient air quality standards for carbon monoxide.
50.9 National 1-hour primary and secondary ambient air quality standards for ozone.
50.10 National 8-hour primary and secondary ambient air quality standards for ozone.
50.11 National primary and secondary ambient air quality standards for nitrogen dioxide.
50.12 National primary and secondary ambient air quality standards for lead.
APPENDIX A TO PART 50—REFERENCE METHOD FOR THE DETERMINATION OF SULFUR DIOXIDE IN THE ATMOSPHERE (PARAROSANILINE METHOD)
APPENDIX B TO PART 50—REFERENCE METHOD FOR THE DETERMINATION OF SUSPENDED PARTICULATE MATTER IN THE ATMOSPHERE (HIGH-VOLUME METHOD)
APPENDIX C TO PART 50—MEASUREMENT PRINCIPLE AND CALIBRATION PROCEDURE FOR THE MEASUREMENT OF CARBON MONOXIDE IN THE ATMOSPHERE (NON–DISPERSIVE INFRARED PHOTOMETRY)
APPENDIX D TO PART 50—MEASUREMENT PRINCIPLE AND CALIBRATION PROCEDURE FOR THE MEASUREMENT OF OZONE IN THE ATMOSPHERE
APPENDIX E TO PART 50 [RESERVED]
APPENDIX F TO PART 50—MEASUREMENT PRINCIPLE AND CALIBRATION PROCEDURE FOR THE MEASUREMENT OF NITROGEN DIOXIDE IN THE ATMOSPHERE (GAS PHASE CHEMILUMINESCENCE)
APPENDIX G TO PART 50—REFERENCE METHOD FOR THE DETERMINATION OF LEAD IN SUSPENDED PARTICULATE MATTER COLLECTED FROM AMBIENT AIR
APPENDIX H TO PART 50—INTERPRETATION OF THE 1-HOUR PRIMARY AND SECONDARY NATIONAL AMBIENT AIR QUALITY STANDARDS FOR OZONE
APPENDIX I TO PART 50—INTERPRETATION OF THE 8-HOUR PRIMARY AND SECONDARY NATIONAL AMBIENT AIR QUALITY STANDARDS FOR OZONE
APPENDIX J TO PART 50—REFERENCE METHOD FOR THE DETERMINATION OF PARTICULATE MATTER AS PM_{10} IN THE ATMOSPHERE
APPENDIX K TO PART 50—INTERPRETATION OF THE NATIONAL AMBIENT AIR QUALITY STANDARDS FOR PARTICULATE MATTER
APPENDIX L TO PART 50—REFERENCE METHOD FOR THE DETERMINATION OF FINE PARTICULATE MATTER AS $PM_{2.5}$ IN THE ATMOSPHERE
APPENDIX M TO PART 50—REFERENCE METHOD FOR THE DETERMINATION OF PARTICULATE MATTER AS PM_{10} IN THE ATMOSPHERE
APPENDIX N TO PART 50—INTERPRETATION OF THE NATIONAL AMBIENT AIR QUALITY STANDARDS FOR PARTICULATE MATTER

AUTHORITY: 42 U.S.C. 7401, *et seq.*

SOURCE: 36 FR 22384, Nov. 25, 1971, unless otherwise noted.

§ 50.1 Definitions.

(a) As used in this part, all terms not defined herein shall have the meaning given them by the Act.

(b) *Act* means the Clean Air Act, as amended (42 U.S.C. 1857–18571, as amended by Pub. L. 91–604).

(c) *Agency* means the Environmental Protection Agency.

(d) *Administrator* means the Administrator of the Environmental Protection Agency.

(e) *Ambient air* means that portion of the atmosphere, external to buildings, to which the general public has access.

(f) *Reference method* means a method of sampling and analyzing the ambient air for an air pollutant that is specified as a reference method in an appendix to this part, or a method that has been designated as a reference method in accordance with part 53 of this chapter; it does not include a method for which a reference method designation has been cancelled in accordance with § 53.11 or § 53.16 of this chapter.

(g) *Equivalent method* means a method of sampling and analyzing the ambient air for an air pollutant that has been designated as an equivalent method in accordance with part 53 of this chapter; it does not include a method for which an equivalent method designation has

been cancelled in accordance with § 53.11 or § 53.16 of this chapter.

(h) *Traceable* means that a local standard has been compared and certified either directly or via not more than one intermediate standard, to a primary standard such as a National Bureau of Standards Standard Reference Material (NBS SRM), or a USEPA/NBS-approved Certified Reference Material (CRM).

(i) *Indian country* is as defined in 18 U.S.C. 1151.

[36 FR 22384, Nov. 25, 1971, as amended at 41 FR 11253, Mar. 17, 1976; 48 FR 2529, Jan. 20, 1983; 63 FR 7274, Feb. 12, 1998]

§ 50.2 Scope.

(a) National primary and secondary ambient air quality standards under section 109 of the Act are set forth in this part.

(b) National primary ambient air quality standards define levels of air quality which the Administrator judges are necessary, with an adequate margin of safety, to protect the public health. National secondary ambient air quality standards define levels of air quality which the Administrator judges necessary to protect the public welfare from any known or anticipated adverse effects of a pollutant. Such standards are subject to revision, and additional primary and secondary standards may be promulgated as the Administrator deems necessary to protect the public health and welfare.

(c) The promulgation of national primary and secondary ambient air quality standards shall not be considered in any manner to allow significant deterioration of existing air quality in any portion of any State or Indian country.

(d) The proposal, promulgation, or revision of national primary and secondary ambient air quality standards shall not prohibit any State or Indian country from establishing ambient air quality standards for that State or area under a tribal CAA program or any portion thereof which are more stringent than the national standards.

[36 FR 22384, Nov. 25, 1971, as amended at 63 FR 7274, Feb. 12, 1998]

§ 50.3 Reference conditions.

All measurements of air quality that are expressed as mass per unit volume (e.g., micrograms per cubic meter) other than for the particulate matter (PM_{10} and $PM_{2.5}$) standards contained in § 50.7 shall be corrected to a reference temperature of 25 °C and a reference pressure of 760 millimeters of mercury (1,013.2 millibars). Measurements of PM_{10} and $PM_{2.5}$ for purposes of comparison to the standards contained in § 50.7 shall be reported based on actual ambient air volume measured at the actual ambient temperature and pressure at the monitoring site during the measurement period.

[62 FR 38711, July 18, 1997]

§ 50.4 National primary ambient air quality standards for sulfur oxides (sulfur dioxide).

(a) The level of the annual standard is 0.030 parts per million (ppm), not to be exceeded in a calendar year. The annual arithmetic mean shall be rounded to three decimal places (fractional parts equal to or greater than 0.0005 ppm shall be rounded up).

(b) The level of the 24-hour standard is 0.14 parts per million (ppm), not to be exceeded more than once per calendar year. The 24-hour averages shall be determined from successive non-overlapping 24-hour blocks starting at midnight each calendar day and shall be rounded to two decimal places (fractional parts equal to or greater than 0.005 ppm shall be rounded up).

(c) Sulfur oxides shall be measured in the ambient air as sulfur dioxide by the reference method described in appendix A to this part or by an equivalent method designated in accordance with part 53 of this chapter.

(d) To demonstrate attainment, the annual arithmetic mean and the second-highest 24-hour averages must be based upon hourly data that are at least 75 percent complete in each calendar quarter. A 24-hour block average shall be considered valid if at least 75 percent of the hourly averages for the 24-hour period are available. In the event that only 18, 19, 20, 21, 22, or 23 hourly averages are available, the 24-hour block average shall be computed as the sum of the available hourly

averages using 18, 19, etc. as the divisor. If fewer than 18 hourly averages are available, but the 24-hour average would exceed the level of the standard when zeros are substituted for the missing values, subject to the rounding rule of paragraph (b) of this section, then this shall be considered a valid 24-hour average. In this case, the 24-hour block average shall be computed as the sum of the available hourly averages divided by 24.

[61 FR 25579, May 22, 1996]

§50.5 National secondary ambient air quality standard for sulfur oxides (sulfur dioxide).

(a) The level of the 3-hour standard is 0.5 parts per million (ppm), not to be exceeded more than once per calendar year. The 3-hour averages shall be determined from successive nonoverlapping 3-hour blocks starting at midnight each calendar day and shall be rounded to 1 decimal place (fractional parts equal to or greater than 0.05 ppm shall be rounded up).

(b) Sulfur oxides shall be measured in the ambient air as sulfur dioxide by the reference method described in appendix A of this part or by an equivalent method designated in accordance with part 53 of this chapter.

(c) To demonstrate attainment, the second-highest 3-hour average must be based upon hourly data that are at least 75 percent complete in each calendar quarter. A 3-hour block average shall be considered valid only if all three hourly averages for the 3-hour period are available. If only one or two hourly averages are available, but the 3-hour average would exceed the level of the standard when zeros are substituted for the missing values, subject to the rounding rule of paragraph (a) of this section, then this shall be considered a valid 3-hour average. In all cases, the 3-hour block average shall be computed as the sum of the hourly averages divided by 3.

[61 FR 25580, May 22, 1996]

§50.6 National primary and secondary ambient air quality standards for PM_{10}.

(a) The level of the national primary and secondary 24-hour ambient air quality standards for particulate matter is 150 micrograms per cubic meter ($\mu g/m^3$), 24-hour average concentration. The standards are attained when the expected number of days per calendar year with a 24-hour average concentration above 150 $\mu g/m^3$, as determined in accordance with appendix K to this part, is equal to or less than one.

(b) The level of the national primary and secondary annual standards for particulate matter is 50 micrograms per cubic meter ($\mu g/m^3$), annual arithmetic mean. The standards are attained when the expected annual arithmetic mean concentration, as determined in accordance with appendix K to this part, is less than or equal to 50 $\mu g/m^3$.

(c) For the purpose of determining attainment of the primary and secondary standards, particulate matter shall be measured in the ambient air as PM_{10} (particles with an aerodynamic diameter less than or equal to a nominal 10 micrometers) by:

(1) A reference method based on appendix J and designated in accordance with part 53 of this chapter, or

(2) An equivalent method designated in accordance with part 53 of this chapter.

[52 FR 24663, July 1, 1987, as amended at 62 FR 38711, July 18, 1997; 65 FR 80779, Dec. 22, 2000]

§50.7 National primary and secondary ambient air quality standards for particulate matter.

(a) The national primary and secondary ambient air quality standards for particulate matter are:

(1) 15.0 micrograms per cubic meter ($\mu g/m^3$) annual arithmetic mean concentration, and 65 $\mu g/m^3$ 24-hour average concentration measured in the ambient air as $PM_{2.5}$ (particles with an aerodynamic diameter less than or equal to a nominal 2.5 micrometers) by either:

(i) A reference method based on appendix L of this part and designated in accordance with part 53 of this chapter; or

(ii) An equivalent method designated in accordance with part 53 of this chapter.

(2) 50 micrograms per cubic meter ($\mu g/m^3$) annual arithmetic mean concentration, and 150 $\mu g/m^3$ 24-hour average concentration measured in the ambient air as PM_{10} (particles with an aerodynamic diameter less than or equal to a nominal 10 micrometers) by either:

(i) A reference method based on appendix M of this part and designated in accordance with part 53 of this chapter; or

(ii) An equivalent method designated in accordance with part 53 of this chapter.

(b) The annual primary and secondary $PM_{2.5}$ standards are met when the annual arithmetic mean concentration, as determined in accordance with appendix N of this part, is less than or equal to 15.0 micrograms per cubic meter.

(c) The 24-hour primary and secondary $PM_{2.5}$ standards are met when the 98th percentile 24-hour concentration, as determined in accordance with appendix N of this part, is less than or equal to 65 micrograms per cubic meter.

(d) The annual primary and secondary PM_{10} standards are met when the annual arithmetic mean concentration, as determined in accordance with appendix N of this part, is less than or equal to 50 micrograms per cubic meter.

(e) The 24-hour primary and secondary PM_{10} standards are met when the 99th percentile 24-hour concentration, as determined in accordance with appendix N of this part, is less than or equal to 150 micrograms per cubic meter.

[62 FR 38711, July 18, 1997]

§ 50.8 National primary ambient air quality standards for carbon monoxide.

(a) The national primary ambient air quality standards for carbon monoxide are:

(1) 9 parts per million (10 milligrams per cubic meter) for an 8-hour average concentration not to be exceeded more than once per year and

(2) 35 parts per million (40 milligrams per cubic meter) for a 1-hour average concentration not to be exceeded more than once per year.

(b) The levels of carbon monoxide in the ambient air shall be measured by:

(1) A reference method based on appendix C and designated in accordance with part 53 of this chapter, or

(2) An equivalent method designated in accordance with part 53 of this chapter.

(c) An 8-hour average shall be considered valid if at least 75 percent of the hourly average for the 8-hour period are available. In the event that only six (or seven) hourly averages are available, the 8-hour average shall be computed on the basis of the hours available using six (or seven) as the divisor.

(d) When summarizing data for comparision with the standards, averages shall be stated to one decimal place. Comparison of the data with the levels of the standards in parts per million shall be made in terms of integers with fractional parts of 0.5 or greater rounding up.

[50 FR 37501, Sept. 13, 1985]

§ 50.9 National 1-hour primary and secondary ambient air quality standards for ozone.

(a) The level of the national 1-hour primary and secondary ambient air quality standards for ozone measured by a reference method based on appendix D to this part and designated in accordance with part 53 of this chapter, is 0.12 parts per million (235 $\mu g/m^3$). The standard is attained when the expected number of days per calendar year with maximum hourly average concentrations above 0.12 parts per million (235 $\mu g/m^3$) is equal to or less than 1, as determined by appendix H to this part.

(b) The 1-hour standards set forth in this section will remain applicable to all areas notwithstanding the promulgation of 8-hour ozone standards under § 50.10. In addition, after the 8-hour standard has become fully enforceable under part D of title I of the CAA and subject to no further legal challenge, the 1-hour standards set forth in this section will no longer apply to an area once EPA determines that the area has

air quality meeting the 1-hour standard. Area designations and classifications with respect to the 1-hour standards are codified in 40 CFR part 81.

[62 FR 38894, July 18, 1997, as amended at 65 FR 45200, July 20, 2000]

EFFECTIVE DATE NOTE: At 68 FR 38163, June 26, 2003, §50.9 was amended by adding paragraph (c), effective August 25, 2003. For the convenience of the user, the added text is set forth as follows.

§ 50.9 National 1-hour primary and secondary ambient air quality standards for ozone.

* * * * *

(c) EPA's authority under paragraph (b) of this section to determine that the 1-hour standard no longer applies to an area based on a determination that the area has attained the 1-hour standard is stayed until such time as EPA issues a final rule revising or reinstating such authority and considers and addresses in such rulemaking any comments concerning (1) which, if any, implementation activities for a revised ozone standard (including but not limited to designation and classification of areas) would need to occur before EPA would determine that the 1-hour ozone standard no longer applies to an area, and (2) the effect of revising the ozone NAAQS on the existing 1-hour ozone designations.

§ 50.10 National 8-hour primary and secondary ambient air quality standards for ozone.

(a) The level of the national 8-hour primary and secondary ambient air quality standards for ozone, measured by a reference method based on appendix D to this part and designated in accordance with part 53 of this chapter, is 0.08 parts per million (ppm), daily maximum 8-hour average.

(b) The 8-hour primary and secondary ozone ambient air quality standards are met at an ambient air quality monitoring site when the average of the annual fourth-highest daily maximum 8-hour average ozone concentration is less than or equal to 0.08 ppm, as determined in accordance with appendix I to this part.

[62 FR 38894, July 18, 1997]

§ 50.11 National primary and secondary ambient air quality standards for nitrogen dioxide.

(a) The level of the national primary ambient air quality standard for nitrogen dioxide is 0.053 parts per million (100 micrograms per cubic meter), annual arithmetic mean concentration.

(b) The level of national secondary ambient air quality standard for nitrogen dioxide is 0.053 parts per million (100 micrograms per cubic meter), annual arithmetic mean concentration.

(c) The levels of the standards shall be measured by:

(1) A reference method based on appendix F and designated in accordance with part 53 of this chapter, or

(2) An equivalent method designated in accordance with part 53 of this chapter.

(d) The standards are attained when the annual arithmetic mean concentration in a calendar year is less than or equal to 0.053 ppm, rounded to three decimal places (fractional parts equal to or greater than 0.0005 ppm must be rounded up). To demonstrate attainment, an annual mean must be based upon hourly data that are at least 75 percent complete or upon data derived from manual methods that are at least 75 percent complete for the scheduled sampling days in each calendar quarter.

[50 FR 25544, June 19, 1985]

§ 50.12 National primary and secondary ambient air quality standards for lead.

National primary and secondary ambient air quality standards for lead and its compounds, measured as elemental lead by a reference method based on appendix G to this part, or by an equivalent method, are: 1.5 micrograms per cubic meter, maximum arithmetic mean averaged over a calendar quarter.

(Secs. 109, 301(a) Clean Air Act as amended (42 U.S.C. 7409, 7601(a)))

[43 FR 46258, Oct. 5, 1978]

APPENDIX A TO PART 50—REFERENCE METHOD FOR THE DETERMINATION OF SULFUR DIOXIDE IN THE ATMOSPHERE (PARAROSANILINE METHOD)

1.0 *Applicability.*

1.1 This method provides a measurement of the concentration of sulfur dioxide (SO_2) in ambient air for determining compliance with the primary and secondary national ambient air quality standards for sulfur oxides (sulfur dioxide) as specified in §50.4 and §50.5 of this chapter. The method is applicable to the measurement of ambient SO_2 concentrations using sampling periods ranging from 30 minutes to 24 hours. Additional quality assurance procedures and guidance are provided in part 58, appendixes A and B, of this chapter and in references 1 and 2.

2.0 *Principle.*

2.1 A measured volume of air is bubbled through a solution of 0.04 M potassium tetrachloromercurate (TCM). The SO_2 present in the air stream reacts with the TCM solution to form a stable monochlorosulfonatomercurate(*3*) complex. Once formed, this complex resists air oxidation(*4, 5*) and is stable in the presence of strong oxidants such as ozone and oxides of nitrogen. During subsequent analysis, the complex is reacted with acid-bleached pararosaniline dye and formaldehyde to form an intensely colored pararosaniline methyl sulfonic acid.(*6*) The optical density of this species is determined spectrophotometrically at 548 nm and is directly related to the amount of SO_2 collected. The total volume of air sampled, corrected to EPA reference conditions (25 °C, 760 mm Hg [101 kPa]), is determined from the measured flow rate and the sampling time. The concentration of SO_2 in the ambient air is computed and expressed in micrograms per standard cubic meter (µg/std m^3).

3.0 *Range.*

3.1 The lower limit of detection of SO_2 in 10 mL of TCM is 0.75 µg (based on collaborative test results).(*7*) This represents a concentration of 25 µg SO_2/m^3 (0.01 ppm) in an air sample of 30 standard liters (short-term sampling) and a concentration of 13 µg SO_2/m^3 (0.005 ppm) in an air sample of 288 standard liters (long-term sampling). Concentrations less than 25 µg SO_2/m^3 can be measured by sampling larger volumes of ambient air; however, the collection efficiency falls off rapidly at low concentrations.(*8, 9*) Beer's law is adhered to up to 34 µg of SO_2 in 25 mL of final solution. This upper limit of the analysis range represents a concentration of 1,130 µg SO_2/m^3 (0.43 ppm) in an air sample of 30 standard liters and a concentration of 590 µg SO_2/m^3 (0.23 ppm) in an air sample of 288 standard liters. Higher concentrations can be measured by collecting a smaller volume of air, by increasing the volume of absorbing solution, or by diluting a suitable portion of the collected sample with absorbing solution prior to analysis.

4.0 *Interferences.*

4.1 The effects of the principal potential interferences have been minimized or eliminated in the following manner: Nitrogen oxides by the addition of sulfamic acid,(*10, 11*) heavy metals by the addition of ethylenediamine tetracetic acid disodium salt (EDTA) and phosphoric acid,(*10, 12*) and ozone by time delay.(*10*) Up to 60 µg Fe (III), 22 µg V (V), 10 µg Cu (II), 10 µg Mn (II), and 10 µg Cr (III) in 10 mL absorbing reagent can be tolerated in the procedure.(*10*) No significant interference has been encountered with 2.3 µg NH_3.(*13*)

5.0 *Precision and Accuracy.*

5.1 The precision of the analysis is 4.6 percent (at the 95 percent confidence level) based on the analysis of standard sulfite samples.(*10*)

5.2 Collaborative test results(*14*) based on the analysis of synthetic test atmospheres (SO_2 in scrubbed air) using the 24-hour sampling procedure and the sulfite-TCM calibration procedure show that:

- The replication error varies linearly with concentration from ±2.5 µg/m^3 at concentrations of 100 µg/m^3 to ±7 µg/m^3 at concentrations of 400 µg/m^3.
- The day-to-day variability within an individual laboratory (repeatability) varies linearly with concentration from ±18.1 µg/m^3 at levels of 100 µg/m^3 to ±50.9 µg/m^3 at levels of 400 µg/m^3.
- The day-to-day variability between two or more laboratories (reproducibility) varies linearly with concentration from ±36.9 µg/m^3 at levels of 100 µg/m^3 to ±103.5 µ g/m^3 at levels of 400 µg/m^3.
- The method has a concentration-dependent bias, which becomes significant at the 95 percent confidence level at the high concentration level. Observed values tend to be lower than the expected SO_2 concentration level.

6.0 *Stability.*

6.1 By sampling in a controlled temperature environment of 15°±10 °C, greater than 98.9 percent of the SO_2–TCM complex is retained at the completion of sampling.(*15*) If kept at 5 °C following the completion of sampling, the collected sample has been found to be stable for up to 30 days.(*10*) The presence of EDTA enhances the stability of SO_2 in the TCM solution and the rate of decay is independent of the concentration of SO_2.(*16*)

7.0 *Apparatus.*

7.1 *Sampling.*

7.1.1 *Sample probe:* A sample probe meeting the requirements of section 7 of 40 CFR part 58, appendix E (Teflon® or glass with residence time less than 20 sec.) is used to transport ambient air to the sampling train location. The end of the probe should be designed or oriented to preclude the sampling of precipitation, large particles, etc. A suitable probe can be constructed from Teflon® tubing connected to an inverted funnel.

7.1.2 *Absorber—short-term sampling:* An all glass midget impinger having a solution capacity of 30 mL and a stem clearance of 4±1

mm from the bottom of the vessel is used for sampling periods of 30 minutes and 1 hour (or any period considerably less than 24 hours). Such an impinger is shown in Figure 1. These impingers are commercially available from distributors such as Ace Glass, Incorporated.

7.1.3 *Absorber—24-hour sampling:* A polypropylene tube 32 mm in diameter and 164 mm long (available from Bel Art Products, Pequammock, NJ) is used as the absorber. The cap of the absorber must be a polypropylene cap with two ports (rubber stoppers are unacceptable because the absorbing reagent can react with the stopper to yield erroneously high SO_2 concentrations). A glass impinger stem, 6 mm in diameter and 158 mm long, is inserted into one port of the absorber cap. The tip of the stem is tapered to a small diameter orifice (0.4±0.1 mm) such that a No. 79 jeweler's drill bit will pass through the opening but a No. 78 drill bit will not. Clearance from the bottom of the absorber to the tip of the stem must be 6±2 mm. Glass stems can be fabricated by any reputable glass blower or can be obtained from a scientific supply firm. Upon receipt, the orifice test should be performed to verify the orifice size. The 50 mL volume level should be permanently marked on the absorber. The assembled absorber is shown in Figure 2.

7.1.4 *Moisture trap:* A moisture trap constructed of a glass trap as shown in Figure 1 or a polypropylene tube as shown in Figure 2 is placed between the absorber tube and flow control device to prevent entrained liquid from reaching the flow control device. The tube is packed with indicating silica gel as shown in Figure 2. Glass wool may be substituted for silica gel when collecting short-term samples (1 hour or less) as shown in Figure 1, or for long term (24 hour) samples if flow changes are not routinely encountered.

7.1.5 *Cap seals:* The absorber and moisture trap caps must seal securely to prevent leaks during use. Heat-shrink material as shown in Figure 2 can be used to retain the cap seals if there is any chance of the caps coming loose during sampling, shipment, or storage.

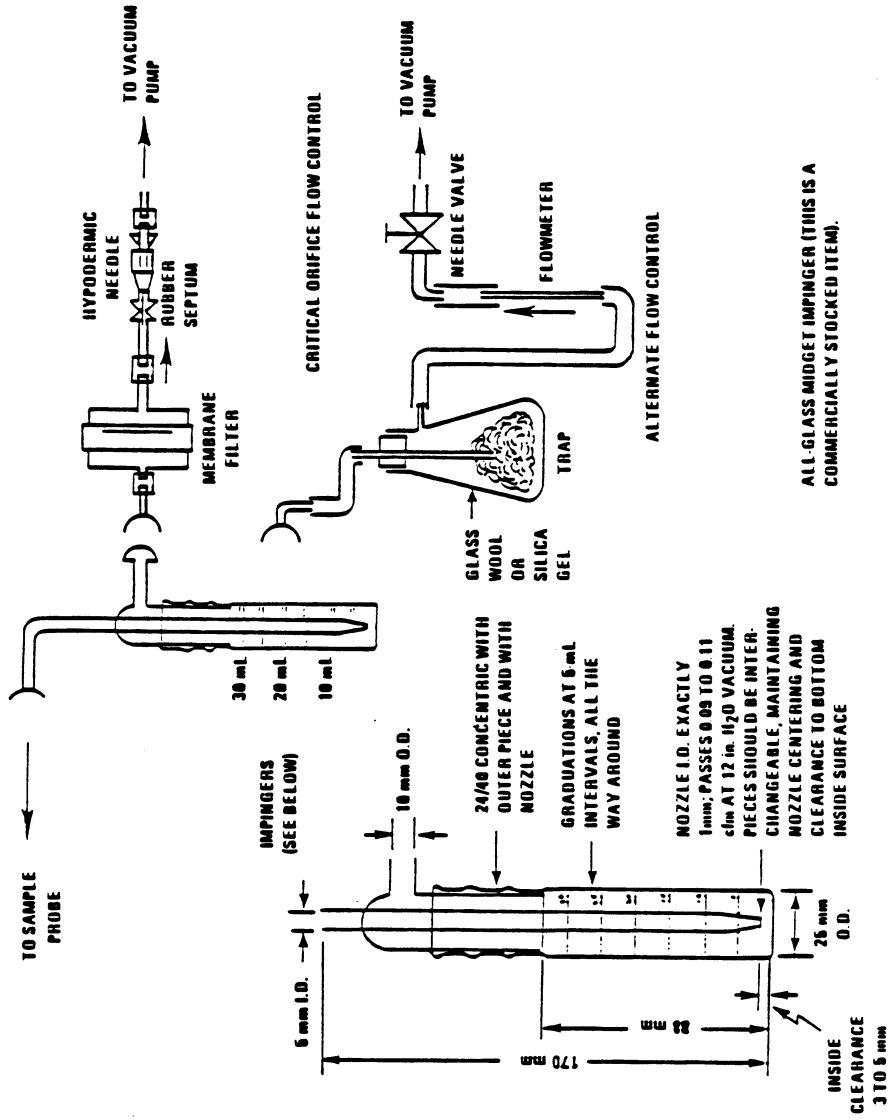

Figure 1. Short-term sampling train.

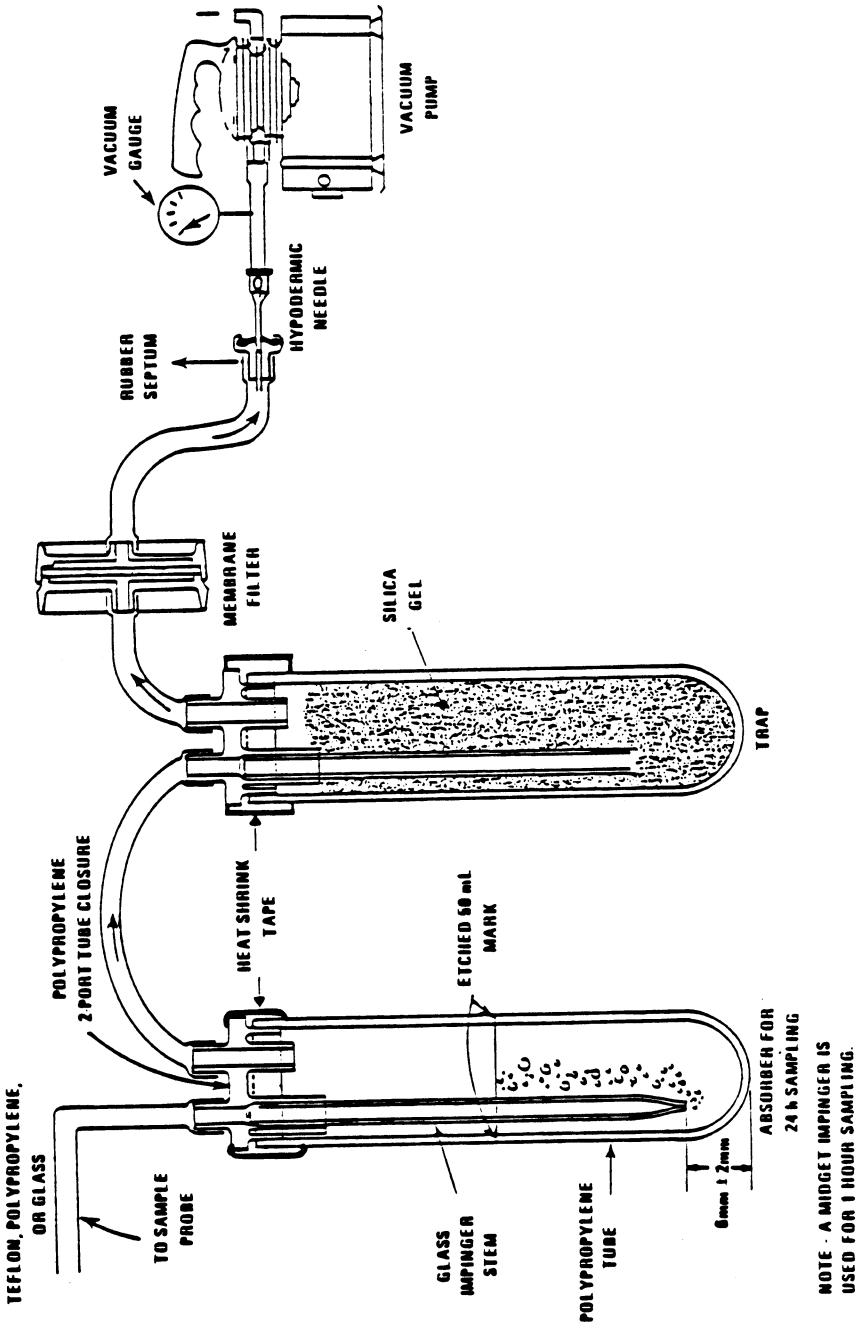

Figure 2. 24-Hour sampling system.

7.1.6 *Flow control device:* A calibrated rotameter and needle valve combination capable of maintaining and measuring air flow to within ±2 percent is suitable for short-term sampling but may not be used for long-term sampling. A critical orifice can be used for regulating flow rate for both long-term and short-term sampling. A 22-gauge hypodermic needle 25 mm long may be used as a critical orifice to yield a flow rate of approximately 1 L/min for a 30-minute sampling period. When sampling for 1 hour, a 23-gauge hypodermic needle 16 mm in length will provide a flow rate of approximately 0.5 L/min. Flow control for a 24-hour sample may be provided by a 27-gauge hypodermic needle critical orifice that is 9.5 mm in length. The flow rate should be in the range of 0.18 to 0.22 L/min.

7.1.7 *Flow measurement device:* Device calibrated as specified in 9.4.1 and used to measure sample flow rate at the monitoring site.

7.1.8 *Membrane particle filter:* A membrane filter of 0.8 to 2 µm porosity is used to protect the flow controller from particles during long-term sampling. This item is optional for short-term sampling.

7.1.9 *Vacuum pump:* A vacuum pump equipped with a vacuum gauge and capable of maintaining at least 70 kPa (0.7 atm) vacuum differential across the flow control device at the specified flow rate is required for sampling.

7.1.10 *Temperature control device:* The temperature of the absorbing solution during sampling must be maintained at 15° ±10 °C. As soon as possible following sampling and until analysis, the temperature of the collected sample must be maintained at 5° ±5 °C. Where an extended period of time may elapse before the collected sample can be moved to the lower storage temperature, a collection temperature near the lower limit of the 15 ± 10 °C range should be used to minimize losses during this period. Thermoelectric coolers specifically designed for this temperature control are available commercially and normally operate in the range of 5° to 15 °C. Small refrigerators can be modified to provide the required temperature control; however, inlet lines must be insulated from the lower temperatures to prevent condensation when sampling under humid conditions. A small heating pad may be necessary when sampling at low temperatures (<7 °C) to prevent the absorbing solution from freezing.*(17)*

7.1.11 *Sampling train container:* The absorbing solution must be shielded from light during and after sampling. Most commercially available sampler trains are enclosed in a light-proof box.

7.1.12 *Timer:* A timer is recommended to initiate and to stop sampling for the 24-hour period. The timer is not a required piece of equipment; however, without the timer a technician would be required to start and stop the sampling manually. An elapsed time meter is also recommended to determine the duration of the sampling period.

7.2 *Shipping.*

7.2.1 *Shipping container:* A shipping container that can maintain a temperature of 5° ±5 °C is used for transporting the sample from the collection site to the analytical laboratory. Ice coolers or refrigerated shipping containers have been found to be satisfactory. The use of eutectic cold packs instead of ice will give a more stable temperature control. Such equipment is available from Cole-Parmer Company, 7425 North Oak Park Avenue, Chicago, IL 60648.

7.3 *Analysis.*

7.3.1 *Spectrophotometer:* A spectrophotometer suitable for measurement of absorbances at 548 nm with an effective spectral bandwidth of less than 15 nm is required for analysis. If the spectrophotometer reads out in transmittance, convert to absorbance as follows:

$$A = \log_{10}(1/T) \qquad (1)$$

where:

A = absorbance, and
T = transmittance ($0 < \geqq T < 1$).

A standard wavelength filter traceable to the National Bureau of Standards is used to verify the wavelength calibration according to the procedure enclosed with the filter. The wavelength calibration must be verified upon initial receipt of the instrument and after each 160 hours of normal use or every 6 months, whichever occurs first.

7.3.2 *Spectrophotometer cells:* A set of 1-cm path length cells suitable for use in the visible region is used during analysis. If the cells are unmatched, a matching correction factor must be determined according to Section 10.1.

7.3.3 *Temperature control device:* The color development step during analysis must be conducted in an environment that is in the range of 20° to 30 °C and controlled to ±1 °C. Both calibration and sample analysis must be performed under identical conditions (within 1 °C). Adequate temperature control may be obtained by means of constant temperature baths, water baths with manual temperature control, or temperature controlled rooms.

7.3.4 *Glassware:* Class A volumetric glassware of various capacities is required for preparing and standardizing reagents and standards and for dispensing solutions during analysis. These included pipets, volumetric flasks, and burets.

7.3.5 *TCM waste receptacle:* A glass waste receptacle is required for the storage of spent TCM solution. This vessel should be stoppered and stored in a hood at all times.

8.0 *Reagents.*

8.1 *Sampling.*

8.1.1 *Distilled water:* Purity of distilled water must be verified by the following procedure:(*18*)

- Place 0.20 mL of potassium permanganate solution (0.316 g/L), 500 mL of distilled water, and 1mL of concentrated sulfuric acid in a chemically resistant glass bottle, stopper the bottle, and allow to stand.
- If the permanganate color (pink) does not disappear completely after a period of 1 hour at room temperature, the water is suitable for use.
- If the permanganate color does disappear, the water can be purified by redistilling with one crystal each of barium hydroxide and potassium permanganate in an all glass still.

8.1.2 *Absorbing reagent* (0.04 M potassium tetrachloromercurate [TCM]): Dissolve 10.86 g mercuric chloride, 0.066 g EDTA, and 6.0 g potassium chloride in distilled water and dilute to volume with distilled water in a 1,000-mL volumetric flask. (*Caution:* Mercuric chloride is highly poisonous. If spilled on skin, flush with water immediately.) The pH of this reagent should be between 3.0 and 5.0 (*10*) Check the pH of the absorbing solution by using pH indicating paper or a pH meter. If the pH of the solution is not between 3.0 and 5.0, dispose of the solution according to one of the disposal techniques described in Section 13.0. The absorbing reagent is normally stable for 6 months. If a precipitate forms, dispose of the reagent according to one of the procedures described in Section 13.0.

8.2 *Analysis.*

8.2.1 *Sulfamic acid* (0.6%): Dissolve 0.6 g sulfamic acid in 100 mL distilled water. Perpare fresh daily.

8.2.2 *Formaldehyde* (0.2%): Dilute 5 mL formaldehyde solution (36 to 38 percent) to 1,000 mL with distilled water. Prepare fresh daily.

8.2.3 *Stock iodine solution* (0.1 N): Place 12.7 g resublimed iodine in a 250-mL beaker and add 40 g potassium iodide and 25 mL water. Stir until dissolved, transfer to a 1,000 mL volumetric flask and dilute to volume with distilled water.

8.2.4 *Iodine solution* (0.01 N): Prepare approximately 0.01 N iodine solution by diluting 50 mL of stock iodine solution (Section 8.2.3) to 500 mL with distilled water.

8.2.5 *Starch indicator solution:* Triturate 0.4 g soluble starch and 0.002 g mercuric iodide (preservative) with enough distilled water to form a paste. Add the paste slowly to 200 mL of boiling distilled water and continue boiling until clear. Cool and transfer the solution to a glass stopperd bottle.

8.2.6 *1 N hydrochloric acid:* Slowly and while stirring, add 86 mL of concentrated hydrochloric acid to 500 mL of distilled water. Allow to cool and dilute to 1,000 mL with distilled water.

8.2.7 *Potassium iodate solution:* Accurately weigh to the nearest 0.1 mg, 1.5 g (record weight) of primary standard grade potassium iodate that has been previously dried at 180 °C for at least 3 hours and cooled in a dessicator. Dissolve, then dilute to volume in a 500-mL volumetric flask with distilled water.

8.2.8 *Stock sodium thiosulfate solution* (0.1 N): Prepare a stock solution by dissolving 25 g sodium thiosulfate ($Na_2 S_2 O_3 \div 5H_2 O$) in 1,000 mL freshly boiled, cooled, distilled water and adding 0.1 g sodium carbonate to the solution. Allow the solution to stand at least 1 day before standardizing. To standardize, accurately pipet 50 mL of potassium iodate solution (Section 8.2.7) into a 500-mL iodine flask and add 2.0 g of potassium iodide and 10 mL of 1 N HCl. Stopper the flask and allow to stand for 5 minutes. Titrate the solution with stock sodium thiosulfate solution (Section 8.2.8) to a pale yellow color. Add 5 mL of starch solution (Section 8.2.5) and titrate until the blue color just disappears. Calculate the normality (N_s) of the stock sodium thiosulfate solution as follows:

$$N_S = \frac{W}{M} \times 2.80 \qquad (2)$$

where:

M = volume of thiosulfate required in mL, and

W = weight of potassium iodate in g (recorded weight in Section 8.2.7).

$$2.80 = \frac{10^3 (\text{conversion of g to mg}) \times 0.1 (\text{fraction iodate used})}{35.67 (\text{equivalent weight of potassium iodate})}$$

8.2.9 *Working sodium thiosulfate titrant* (0.01 N): Accurately pipet 100 mL of stock sodium thiosulfate solution (Section 8.2.8) into a 1,000-mL volumetric flask and dilute to volume with freshly boiled, cooled, distilled water. Calculate the normality of the working sodium thiosulfate titrant (N_T) as follows:

$$N_T = N_S \times 0.100 \qquad (3)$$

8.2.10 *Standardized sulfite solution for the preparation of working sulfite-TCM solution:* Dissolve 0.30 g sodium metabisulfite ($Na_2 S_2 O_5$) or 0.40 g sodium sulfite ($Na_2 SO_3$) in 500 mL of recently boiled, cooled, distilled water. (Sulfite solution is unstable; it is therefore important to use water of the highest purity to minimize this instability.) This solution contains the equivalent of 320 to 400 µg SO_2/mL. The actual concentration of the solution is determined by adding excess iodine and back-titrating with standard sodium thiosulfate solution. To back-titrate, pipet 50 mL of the 0.01 N iodine solution (Section 8.2.4) into each of two 500-mL iodine flasks (A and B). To flask A (blank) add 25 mL distilled water, and to flask B (sample)

pipet 25 mL sulfite solution. Stopper the flasks and allow to stand for 5 minutes. Prepare the working sulfite-TCM solution (Section 8.2.11) immediately prior to adding the iodine solution to the flasks. Using a buret containing standardized 0.01 N thiosulfate titrant (Section 8.2.9), titrate the solution in each flask to a pale yellow color. Then add 5 mL starch solution (Section 8.2.5) and continue the titration until the blue color just disappears.

8.2.11 *Working sulfite-TCM solution:* Accurately pipet 5 mL of the standard sulfite solution (Section 8.2.10) into a 250-mL volumetric flask and dilute to volume with 0.04 M TCM. Calculate the concentration of sulfur dioxide in the working solution as follows:

$$C_{TCM/SO2}\left(\mu g\,SO_2/mL\right) = \frac{(A-B)\left(N_T\right)(32{,}000)}{25} \times 0.02 \qquad (4)$$

where:

A = volume of thiosulfate titrant required for the blank, mL;

B = volume of thiosulfate titrant required for the sample, mL;

N_T = normality of the thiosulfate titrant, from equation (3);

32,000 = milliequivalent weight of SO_2, µg;

25 = volume of standard sulfite solution, mL; and

0.02 = dilution factor.

This solution is stable for 30 days if kept at 5 °C. (16) If not kept at 5 °C, prepare fresh daily.

8.2.12 *Purified pararosaniline (PRA) stock solution* (0.2% nominal):

8.2.12.1 *Dye specifications—*

- The dye must have a maximum absorbance at a wavelength of 540 nm when assayed in a buffered solution of 0.1 M sodium acetate-acetic acid;
- The absorbance of the reagent blank, which is temperature sensitive (0.015 absorbance unit/ °C), must not exceed 0.170 at 22 °C with a 1-cm optical path length when the blank is prepared according to the specified procedure;
- The calibration curve (Section 10.0) must have a slope equal to 0.030±0.002 absorbance unit/µg SO_2 with a 1-cm optical path length when the dye is pure and the sulfite solution is properly standardized.

8.2.12.2 *Preparation of stock PRA solution—* A specially purified (99 to 100 percent pure) solution of pararosaniline, which meets the above specifications, is commercially available in the required 0.20 percent concentration (Harleco Co.). Alternatively, the dye may be purified, a stock solution prepared, and then assayed according to the procedure as described below.*(10)*

8.2.12.3 *Purification procedure for PRA—*

1. Place 100 mL each of 1-butanol and 1 N HCl in a large separatory funnel (250-mL) and allow to equilibrate. Note: Certain batches of 1-butanol contain oxidants that create an SO_2 demand. Before using, check by placing 20 mL of 1-butanol and 5 mL of 20 percent potassium iodide (KI) solution in a 50-mL separatory funnel and shake thoroughly. If a yellow color appears in the alcohol phase, redistill the 1-butanol from silver oxide and collect the middle fraction or purchase a new supply of 1-butanol.

2. Weigh 100 mg of pararosaniline hydrochloride dye (PRA) in a small beaker. Add 50 mL of the equilibrated acid (drain in acid from the bottom of the separatory funnel in 1.) to the beaker and let stand for several minutes. Discard the remaining acid phase in the separatory funnel.

3. To a 125-mL separatory funnel, add 50 mL of the equilibrated 1-butanol (draw the 1-butanol from the top of the separatory funnel in 1.). Transfer the acid solution (from 2.) containing the dye to the funnel and shake carefully to extract. The violet impurity will transfer to the organic phase.

4. Transfer the lower aqueous phase into another separatory funnel, add 20 mL of equilibrated 1-butanol, and extract again.

5. Repeat the extraction procedure with three more 10-mL portions of equilibrated 1-butanol.

6. After the final extraction, filter the acid phase through a cotton plug into a 50-mL volumetric flask and bring to volume with 1 N HCl. This stock reagent will be a yellowish red.

7. To check the purity of the PRA, perform the assay and adjustment of concentration (Section 8.2.12.4) and prepare a reagent blank (Section 11.2); the absorbance of this reagent blank at 540 nm should be less than 0.170 at 22 °C. If the absorbance is greater than 0.170 under these conditions, further extractions should be performed.

8.2.12.4 *PRA assay procedure—* The concentration of pararosaniline hydrochloride (PRA) need be assayed only once after purification. It is also recommended that commercial solutions of pararosaniline be assayed when first purchased. The assay procedure is as follows:*(10)*

1. Prepare 1 M acetate-acetic acid buffer stock solution with a pH of 4.79 by dissolving

13.61 g of sodium acetate trihydrate in distilled water in a 100-mL volumetric flask. Add 5.70 mL of glacial acetic acid and dilute to volume with distilled water.

2. Pipet 1 mL of the stock PRA solution obtained from the purification process or from a commercial source into a 100-mL volumetric flask and dilute to volume with distilled water.

3. Transfer a 5–mL aliquot of the diluted PRA solution from 2. into a 50–mL volumetric flask. Add 5mL of 1 M acetate-acetic acid buffer solution from 1. and dilute the mixture to volume with distilled water. Let the mixture stand for 1 hour.

4. Measure the absorbance of the above solution at 540 nm with a spectrophotometer against a distilled water reference. Compute the percentage of nominal concentration of PRA by

$$\%\mathrm{PRA} = \frac{A \times K}{W} \qquad (5)$$

where:

A = measured absorbance of the final mixture (absorbance units);

W = weight in grams of the PRA dye used in the assay to prepare 50 mL of stock solution (for example, 0.100 g of dye was used to prepare 50 mL of solution in the purification procedure; when obtained from commercial sources, use the stated concentration to compute W; for 98% PRA, W=.098 g.); and

K = 21.3 for spectrophotometers having a spectral bandwidth of less than 15 nm and a path length of 1 cm.

8.2.13 *Pararosaniline reagent:* To a 250–mL volumetric flask, add 20 mL of stock PRA solution. Add an additional 0.2 mL of stock solution for each percentage that the stock assays below 100 percent. Then add 25 mL of 3 M phosphoric acid and dilute to volume with distilled water. The reagent is stable for at least 9 months. Store away from heat and light.

9.0 *Sampling Procedure.*

9.1 *General Considerations.* Procedures are described for short-term sampling (30-minute and 1-hour) and for long-term sampling (24-hour). Different combinations of absorbing reagent volume, sampling rate, and sampling time can be selected to meet special needs. For combinations other than those specifically described, the conditions must be adjusted so that linearity is maintained between absorbance and concentration over the dynamic range. Absorbing reagent volumes less than 10 mL are not recommended. The collection efficiency is above 98 percent for the conditions described; however, the efficiency may be substantially lower when sampling concentrations below 25$\mu\gamma SO_2/m^3$.(*8,9*)

9.2 *30-Minute and 1-Hour Sampling.* Place 10 mL of TCM absorbing reagent in a midget impinger and seal the impinger with a thin film of silicon stopcock grease (around the ground glass joint). Insert the sealed impinger into the sampling train as shown in Figure 1, making sure that all connections between the various components are leak tight. Greaseless ball joint fittings, heat shrinkable Teflon® tubing, or Teflon® tube fittings may be used to attain leakfree conditions for portions of the sampling train that come into contact with air containing SO_2. Shield the absorbing reagent from direct sunlight by covering the impinger with aluminum foil or by enclosing the sampling train in a light-proof box. Determine the flow rate according to Section 9.4.2. Collect the sample at 1±0.10 L/min for 30-minute sampling or 0.500±0.05 L/min for 1-hour sampling. Record the exact sampling time in minutes, as the sample volume will later be determined using the sampling flow rate and the sampling time. Record the atmospheric pressure and temperature.

9.3 *24-Hour Sampling.* Place 50 mL of TCM absorbing solution in a large absorber, close the cap, and, if needed, apply the heat shrink material as shown in Figure 3. Verify that the reagent level is at the 50 mL mark on the absorber. Insert the sealed absorber into the sampling train as shown in Figure 2. At this time verify that the absorber temperature is controlled to 15±10 °C. During sampling, the absorber temperature must be controlled to prevent decomposition of the collected complex. From the onset of sampling until analysis, the absorbing solution must be protected from direct sunlight. Determine the flow rate according to Section 9.4.2. Collect the sample for 24 hours from midnight to midnight at a flow rate of 0.200±0.020 L/min. A start/stop timer is helpful for initiating and stopping sampling and an elapsed time meter will be useful for determining the sampling time.

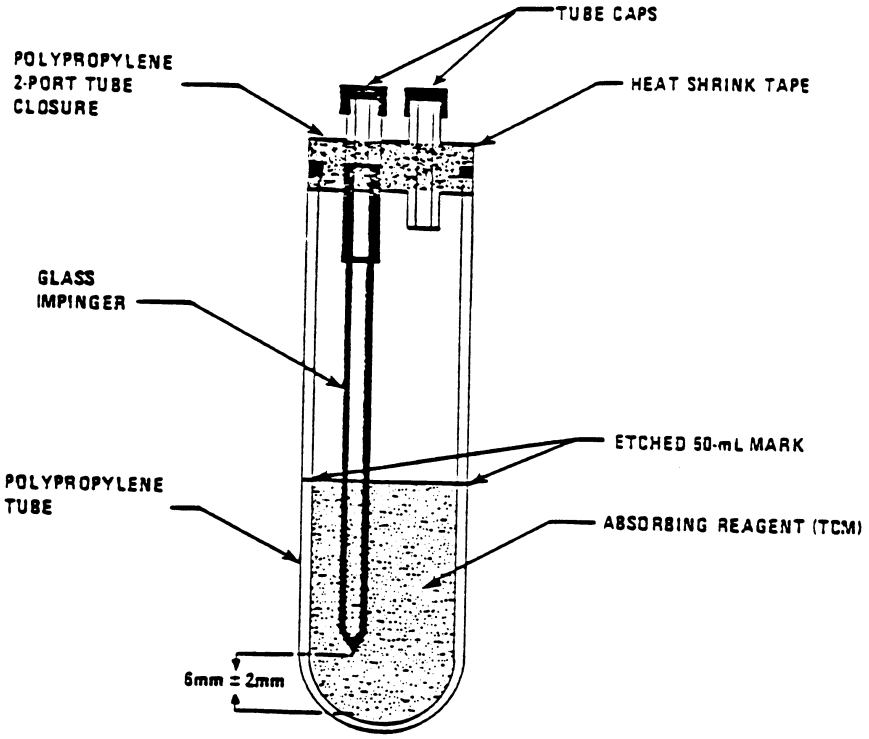

Figure 3. An absorber (24-hour sample) filled and assembled for shipment.

9.4 *Flow Measurement.*

9.4.1 *Calibration:* Flow measuring devices used for the on-site flow measurements required in 9.4.2 must be calibrated against a reliable flow or volume standard such as an NBS traceable bubble flowmeter or calibrated wet test meter. Rotameters or critical orifices used in the sampling train may be calibrated, if desired, as a quality control check, but such calibration shall not replace the on-site flow measurements required by 9.4.2. In-line rotameters, if they are to be calibrated, should be calibrated in situ, with the appropriate volume of solution in the absorber.

9.4.2 *Determination of flow rate at sampling site:* For short-term samples, the standard flow rate is determined at the sampling site at the initiation and completion of sample collection with a calibrated flow measuring device connected to the inlet of the absorber. For 24-hour samples, the standard flow rate is determined at the time the absorber is placed in the sampling train and again when the absorber is removed from the train for shipment to the analytical laboratory with a calibrated flow measuring device connected to the inlet of the sampling train. The flow rate determination must be made with all components of the sampling system in operation (e.g., the absorber temperature controller and any sample box heaters must also be operating). Equation 6 may be used to determine the standard flow rate when a calibrated positive displacement meter is used as the flow measuring device. Other types of calibrated flow measuring devices may also be used to determine the flow rate at the sampling site provided that the user applies any appropriate corrections to devices for which output is dependent on temperature or pressure.

$$Q_{std} = Q_{act} \times \frac{P_b - (1 - RH)P_{H_2O}}{P_{std}} \times \frac{298.16.}{(T_{meter} + 273.16).} \qquad (6)$$

where:

Q_{std} = flow rate at standard conditions, std L/min (25 °C and 760 mm Hg);

Q_{act} = flow rate at monitoring site conditions, L/min;

P_b = barometric pressure at monitoring site conditions, mm Hg or kPa;

RH = fractional relative humidity of the air being measured;

P_{H_2O} = vapor pressure of water at the temperature of the air in the flow or volume standard, in the same units as P_b, (for wet volume standards only, i.e., bubble flowmeter or wet test meter; for dry standards, i.e., dry test meter, P_{H_2O}=0);

P_{std} = standard barometric pressure, in the same units as P_b (760 mm Hg or 101 kPa); and

T_{meter} = temperature of the air in the flow or volume standard, °C (e.g., bubble flowmeter).

If a barometer is not available, the following equation may be used to determine the barometric pressure:

$$P_b = 760 - .076(H)\,\text{mm Hg, or } P_b = 101 - .01(H)\text{kPa} \qquad (7)$$

where:

H = sampling site elevation above sea level in meters.

If the initial flow rate (Q_i) differs from the flow rate of the critical orifice or the flow rate indicated by the flowmeter in the sampling train (Q_c) by more than 5 percent as determined by equation (8), check for leaks and redetermine Q_i.

$$\%\ \text{Diff} = \frac{Q_i - Q_c}{Q_c} \times 100 \qquad (8)$$

Invalidate the sample if the difference between the initial (Q_i) and final (Q_f) flow rates is more than 5 percent as determined by equation (9):

$$\%\ \text{Diff} = \frac{Q_i - Q_f}{Q_f} \times 100 \qquad (9)$$

9.5 *Sample Storage and Shipment.* Remove the impinger or absorber from the sampling train and stopper immediately. Verify that the temperature of the absorber is not above 25 °C. Mark the level of the solution with a temporary (e.g., grease pencil) mark. If the sample will not be analyzed within 12 hours of sampling, it must be stored at 5° ±5 °C until analysis. Analysis must occur within 30 days. If the sample is transported or shipped for a period exceeding 12 hours, it is recommended that thermal coolers using eutectic ice packs, refrigerated shipping containers, etc., be used for periods up to 48 hours. (*17*) Measure the temperature of the absorber solution when the shipment is received. Invalidate the sample if the temperature is above 10 °C. Store the sample at 5° ±5 °C until it is analyzed.

10.0 *Analytical Calibration.*

10.1 *Spectrophotometer Cell Matching.* If unmatched spectrophotometer cells are used, an absorbance correction factor must be determined as follows:

1. Fill all cells with distilled water and designate the one that has the lowest absorbance at 548 nm as the reference. (This reference cell should be marked as such and continually used for this purpose throughout all future analyses.)
2. Zero the spectrophotometer with the reference cell.
3. Determine the absorbance of the remaining cells (A_c) in relation to the reference cell and record these values for future use. Mark all cells in a manner that adequately identifies the correction.

The corrected absorbance during future analyses using each cell is determining as follows:

$$A = A_{obs} - A_c \qquad (10)$$

where:

A = corrected absorbance,

A_{obs} = uncorrected absorbance, and

A_c = cell correction.

10.2 *Static Calibration Procedure* (Option 1). Prepare a dilute working sulfite-TCM solution by diluting 10 mL of the working sulfite-TCM solution (Section 8.2.11) to 100 mL with TCM absorbing reagent. Following the table below, accurately pipet the indicated volumes of the sulfite-TCM solutions into a series of 25-mL volumetric flasks. Add TCM absorbing reagent as indicated to bring the volume in each flask to 10 mL.

Sulfite-TCM solution	Volume of sulfite-TCM solution	Volume of TCM, mL	Total µg SO_2 (approx.*
Working	4.0	6.0	28.8
Working	3.0	7.0	21.6
Working	2.0	8.0	14.4
Dilute working	10.0	0.0	7.2
Dilute working	5.0	5.0	3.6
	0.0	10.0	0.0

*Based on working sulfite-TCM solution concentration of 7.2 µg SO_2/mL; the actual total µg SO_2 must be calculated using equation 11 below.

To each volumetric flask, add 1 mL 0.6% sulfamic acid (Section 8.2.1), accurately pipet 2 mL 0.2% formaldehyde solution (Section 8.2.2), then add 5 mL pararosaniline solution (Section 8.2.13). Start a laboratory timer that has been set for 30 minutes. Bring all flasks to volume with recently boiled and cooled distilled water and mix thoroughly. The color must be developed (during the 30-minute period) in a temperature environment in the range of 20° to 30 °C, which is controlled to ±1 °C. For increased precision, a constant temperature bath is recommended during the color development step. After 30 minutes, determine the corrected absorbance of each standard at 548 nm against a distilled water reference (Section 10.1). Denote this absorbance as (A). Distilled water is used in the reference cell rather than the reagant blank because of the temperature sensitivity of the reagent blank. Calculate the total micrograms SO_2 in each solution:

$$\mu g\ SO_2 = V_{TCM/SO2} \times C_{TCM/SO2} \times D \qquad (11)$$

where:

$V_{TCM/SO}2$ = volume of sulfite-TCM solution used, mL;

$C_{TCM/SO}2$ = concentration of sulfur dioxide in the working sulfite-TCM, µg SO_2/mL (from equation 4); and

D = dilution factor (D = 1 for the working sulfite-TCM solution; D = 0.1 for the diluted working sulfite-TCM solution).

A calibration equation is determined using the method of linear least squares (Section 12.1). The total micrograms SO_2 contained in each solution is the x variable, and the corrected absorbance (eq. 10) associated with each solution is the y variable. For the calibration to be valid, the slope must be in the range of 0.030 ±0.002 absorbance unit/µg SO_2, the intercept as determined by the least squares method must be equal to or less than 0.170 absorbance unit when the color is developed at 22 °C (add 0.015 to this 0.170 specification for each °C above 22 °C) and the correlation coefficient must be greater than 0.998. If these criteria are not met, it may be the result of an impure dye and/or an improperly standardized sulfite-TCM solution. A calibration factor (B_s) is determined by calculating the reciprocal of the slope and is subsequently used for calculating the sample concentration (Section 12.3).

10.3 *Dynamic Calibration Procedures* (Option 2). Atmospheres containing accurately known concentrations of sulfur dioxide are prepared using permeation devices. In the systems for generating these atmospheres, the permeation device emits gaseous SO_2 at a known, low, constant rate, provided the temperature of the device is held constant (±0.1 °C) and the device has been accurately calibrated at the temperature of use. The SO_2 permeating from the device is carried by a low flow of dry carrier gas to a mixing chamber where it is diluted with SO_2-free air to the desired concentration and supplied to a vented manifold. A typical system is shown schematically in Figure 4 and this system and other similar systems have been described in detail by O'Keeffe and Ortman; (*19*) Scaringelli, Frey, and Saltzman, (*20*) and Scaringelli, O'Keeffe, Rosenberg, and Bell. (*21*) Permeation devices may be prepared or purchased and in both cases must be traceable either to a National Bureau of Standards (NBS) Standard Reference Material (SRM 1625, SRM 1626, SRM 1627) or to an NBS/EPA-approved commercially available Certified Reference Material (CRM). CRM's are described in Reference 22, and a list of CRM sources is available from the address shown for Reference 22. A recommended protocol for certifying a permeation device to an NBS SRM or CRM is given in Section 2.0.7 of Reference 2. Device permeation rates of 0.2 to 0.4 µg/min, inert gas flows of about 50 mL/min, and dilution air flow rates from 1.1 to 15 L/min conveniently yield standard atmospheres in the range of 25 to 600 µg SO_2/m^3 (0.010 to 0.230 ppm).

10.3.1 *Calibration Option 2A* (30-minute and 1-hour samples): Generate a series of six standard atmospheres of SO_2 (e.g., 0, 50, 100, 200, 350, 500, 750 µg/m^3) by adjusting the dilution flow rates appropriately. The concentration of SO_2 in each atmosphere is calculated as follows:

$$C_a = \frac{P_r \times 10^3}{Q_d + Q_p} \qquad (12)$$

where:

C_a = concentration of SO_2 at standard conditions, µg/m³;
P_r = permeation rate, µg/min;
Q_d = flow rate of dilution air, std L/min; and
Q_p = flow rate of carrier gas across permeation device, std L/min.

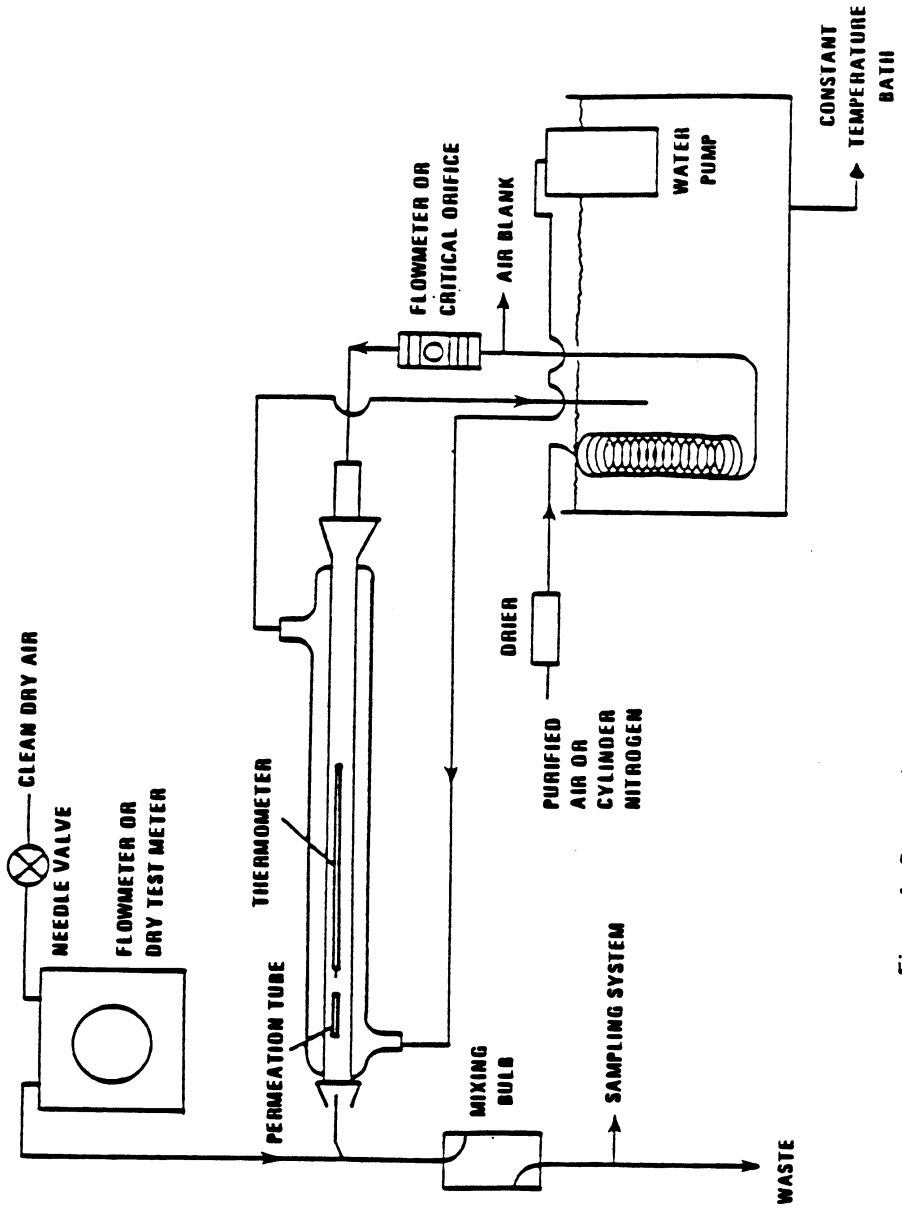

Figure 4. Permeation tube schematic for laboratory use.

Be sure that the total flow rate of the standard exceeds the flow demand of the sample train, with the excess flow vented at atmospheric pressure. Sample each atmosphere using similar apparatus as shown in Figure 1 and under the same conditions as field sampling (i.e., use same absorbing reagent volume and sample same volume of air at an equivalent flow rate). Due to the length of the sampling periods required, this method is not recommended for 24-hour sampling. At the completion of sampling, quantitatively transfer the contents of each impinger to one of a series of 25-mL volumetric flasks (if 10 mL of absorbing solution was used) using small amounts of distilled water for rinse (<5mL). If >10 mL of absorbing solution was used, bring the absorber solution in each impinger to orginal volume with distilled H_2 O and pipet 10-mL portions from each impinger into a series of 25-mL volumetric flasks. If the color development steps are not to be started within 12 hours of sampling, store the solutions at 5° ± 5 °C. Calculate the total micrograms SO_2 in each solution as follows:

$$\mu g SO_2 = \frac{C_a \times Q_s \times t \times V_a \times 10^{-3}}{V_b} \qquad (13)$$

where:

C_a = concentration of SO_2 in the standard atmosphere, µg/m³;
O_s = sampling flow rate, std L/min;
t=sampling time, min;
V_a = volume of absorbing solution used for color development (10 mL); and
V_b = volume of absorbing solution used for sampling, mL.

Add the remaining reagents for color development in the same manner as in Section 10.2 for static solutions. Calculate a calibration equation and a calibration factor (B_g) according to Section 10.2, adhering to all the specified criteria.

10.3.2 Calibration Option 2B (24-hour samples): Generate a standard atmosphere containing approximately 1,050 µg SO_2/m³ and calculate the exact concentration according to equation 12. Set up a series of six absorbers according to Figure 2 and connect to a common manifold for sampling the standard atmosphere. Be sure that the total flow rate of the standard exceeds the flow demand at the sample manifold, with the excess flow vented at atmospheric pressure. The absorbers are then allowed to sample the atmosphere for varying time periods to yield solutions containing 0, 0.2, 0.6, 1.0, 1.4, 1.8, and 2.2 µg SO_2/mL solution. The sampling times required to attain these solution concentrations are calculated as follows:

$$t = \frac{V_b \times C_s}{C_a \times Q_s \times 10^{-3}} \qquad (14)$$

where:

t = sampling time, min;
V_b = volume of absorbing solution used for sampling (50 mL);
C_s = desired concentration of SO_2 in the absorbing solution, µg/mL;
C_a = concentration of the standard atmosphere calculated according to equation 12, µg/m³; and
Q_s = sampling flow rate, std L/min.

At the completion of sampling, bring the absorber solutions to original volume with distilled water. Pipet a 10-mL portion from each absorber into one of a series of 25-mL volumetric flasks. If the color development steps are not to be started within 12 hours of sampling, store the solutions at 5° ± 5 °C. Add the remaining reagents for color development in the same manner as in Section 10.2 for static solutions. Calculate the total µg SO_2 in each standard as follows:

$$\mu g SO_2 = \frac{C_a \times Q_s \times t \times V_a \times 10^{-3}}{V_b} \qquad (15)$$

where:

V_a = volume of absorbing solution used for color development (10 mL).
All other parameters are defined in equation 14.

Calculate a calibration equation and a calibration factor (B_t) according to Section 10.2 adhering to all the specified criteria.

11.0 *Sample Preparation and Analysis.*

11.1 *Sample Preparation.* Remove the samples from the shipping container. If the shipment period exceeded 12 hours from the completion of sampling, verify that the temperature is below 10 °C. Also, compare the solution level to the temporary level mark on the absorber. If either the temperature is above 10 °C or there was significant loss (more than 10 mL) of the sample during shipping, make an appropriate notation in the record and invalidate the sample. Prepare the samples for analysis as follows:

1. For 30-minute or 1-hour samples: Quantitatively transfer the entire 10 mL amount of absorbing solution to a 25-mL volumetric flask and rinse with a small amount (<5 mL) of distilled water.

2. For 24-hour samples: If the volume of the sample is less than the original 50-mL volume (permanent mark on the absorber), adjust the volume back to the original volume with distilled water to compensate for water lost to evaporation during sampling. If the final volume is greater than the original volume, the volume must be measured using a graduated cylinder. To analyze, pipet 10 mL

of the solution into a 25-mL volumetric flask.

11.2 *Sample Analysis.* For each set of determinations, prepare a reagent blank by adding 10 mL TCM absorbing solution to a 25-mL volumetric flask, and two control standards containing approximately 5 and 15 µg SO_2, respectively. The control standards are prepared according to Section 10.2 or 10.3. The analysis is carried out as follows:

1. Allow the sample to stand 20 minutes after the completion of sampling to allow any ozone to decompose (if applicable).
2. To each 25-mL volumetric flask containing reagent blank, sample, or control standard, add 1 mL of 0.6% sulfamic acid (Section 8.2.1) and allow to react for 10 min.
3. Accurately pipet 2 mL of 0.2% formaldehyde solution (Section 8.2.2) and then 5 mL of pararosaniline solution (Section 8.2.13) into each flask. Start a laboratory timer set at 30 minutes.
4. Bring each flask to volume with recently boiled and cooled distilled water and mix thoroughly.
5. During the 30 minutes, the solutions must be in a temperature controlled environment in the range of 20° to 30 °C maintained to ±1 °C. This temperature must also be within 1 °C of that used during calibration.
6. After 30 minutes and before 60 minutes, determine the corrected absorbances (equation 10) of each solution at 548 nm using 1-cm optical path length cells against a distilled water reference (Section 10.1). (*Distilled water is used as a reference instead of the reagent blank because of the sensitivity of the reagent blank to temperature.)*
7. Do not allow the colored solution to stand in the cells because a film may be deposited. Clean the cells with isopropyl alcohol after use.
8. The reagent blank must be within 0.03 absorbance units of the intercept of the calibration equation determined in Section 10.

11.3 *Absorbance range.* If the absorbance of the sample solution ranges between 1.0 and 2.0, the sample can be diluted 1:1 with a portion of the reagent blank and the absorbance redetermined within 5 minutes. Solutions with higher absorbances can be diluted up to sixfold with the reagent blank in order to obtain scale readings of less than 1.0 absorbance unit. However, it is recommended that a smaller portion (<10 mL) of the original sample be reanalyzed (if possible) if the sample requires a dilution greater than 1:1.

11.4 *Reaqent disposal.* All reagents containing mercury compounds must be stored and disposed of using one of the procedures contained in Section 13. Until disposal, the discarded solutions can be stored in closed glass containers and should be left in a fume hood.

12.0 *Calculations.*

12.1 *Calibration Slope, Intercept, and Correlation Coefficient.* The method of least squares is used to calculate a calibration equation in the form of:

$$y = mx + b \qquad (16)$$

where:

y = corrected absorbance,
m = slope, absorbance unit/µg SO_2,
x = micrograms of SO_2,
b = y intercept (absorbance units).

The slope (m), intercept (b), and correlation coefficient (r) are calculated as follows:

$$m = \frac{n\sum xy - (\sum x)(\sum y)}{n\sum x^2 - (\sum x)^2} \qquad (17)$$

$$b = \frac{\sum y - m\sum x}{n} \qquad (18)$$

$$r = \sqrt{\frac{m(\sum xy - \sum x \sum y / n)}{\sum y^2 - (\sum y)^2 / n}} \qquad (19)$$

where n is the number of calibration points.

A data form (Figure 5) is supplied for easily organizing calibration data when the slope, intercept, and correlation coefficient are calculated by hand.

12.2 *Total Sample Volume.* Determine the sampling volume at standard conditions as follows:

$$V_{std} = \frac{Q_i + Q_f}{2} \times t \qquad (20)$$

where:

V_{std} = sampling volume in std L,
Q_i = standard flow rate determined at the initiation of sampling in std L/min,
Q_f = standard flow rate determined at the completion of sampling is std L/min, and
t = total sampling time, min.

12.3 *Sulfur Dioxide Concentration.* Calculate and report the concentration of each sample as follows:

$$\mu g\ SO_2/m^3 = \frac{(A - A_o)(B_x)(10^3)}{V_{std}} \times \frac{V_b}{V_a} \qquad (21)$$

where:

A = corrected absorbance of the sample solution, from equation (10);
A_o = corrected absorbance of the reagent blank, using equation (10);
B_x = calibration factor equal to B_s, B_g, or B_t depending on the calibration procedure used, the reciprocal of the slope of the calibration equation;
V_a = volume of absorber solution analyzed, mL;
V_b = total volume of solution in absorber (see 11.1–2), mL; and
V_{std} = standard air volume sampled, std L (from Section 12.2).

DATA FORM

[For hand calculations]

Calibration point no.	Micrograms So_2	Absorbance units			
	(x)	(y)	x^2	xy	y^2
1	.....	.....	.....	.....	.....
2	.....	.....	.....	.....	.....
3	.....	.....	.....	.....	.....
4	.....	.....	.....	.....	.....
5	.....	.....	.....	.....	.....
6	.....	.....	.....	.....	.....

Σ x=_____ Σ y=_____ Σ x^2=_____ Σxy_____ Σy^2_____

n=_____ (number of pairs of coordinates.)

FIGURE 5. Data form for hand calculations.

12.4 Control Standards. Calculate the analyzed micrograms of SO_2 in each control standard as follows:

$$C_q = (A - A_o) \times B_x \qquad (22)$$

where:

C_q = analyzed µg SO_2 in each control standard,

A = corrected absorbance of the control standard, and

A_o = corrected absorbance of the reagent blank.

The difference between the true and analyzed values of the control standards must not be greater than 1 µg. If the difference is greater than 1 µg, the source of the discrepancy must be identified and corrected.

12.5 Conversion of µg/m^3 to ppm (v/v). If desired, the concentration of sulfur dioxide at reference conditions can be converted to ppm SO_2 (v/v) as follows:

$$\text{ppm } SO_2 = \frac{\mu g\ SO_2}{m^3} \times 3.82 \times 10^{-4} \qquad (23)$$

13.0 The TCM absorbing solution and any reagents containing mercury compounds must be treated and disposed of by one of the methods discussed below. Both methods remove greater than 99.99 percent of the mercury.

13.1 *Disposal of Mercury-Containing Solutions.*

13.2 *Method for Forming an Amalgam.*

1. Place the waste solution in an uncapped vessel in a hood.

2. For each liter of waste solution, add approximately 10 g of sodium carbonate until neutralization has occurred (NaOH may have to be used).

3. Following neutralization, add 10 g of granular zinc or magnesium.

4. Stir the solution in a hood for 24 hours. Caution must be exercised as hydrogen gas is evolved by this treatment process.

5. After 24 hours, allow the solution to stand without stirring to allow the mercury amalgam (solid black material) to settle to the bottom of the waste receptacle.

6. Upon settling, decant and discard the supernatant liquid.

7. Quantitatively transfer the solid material to a container and allow to dry.

8. The solid material can be sent to a mercury reclaiming plant. It must not be discarded.

13.3 *Method Using Aluminum Foil Strips.*

1. Place the waste solution in an uncapped vessel in a hood.

2. For each liter of waste solution, add approximately 10 g of aluminum foil strips. If all the aluminum is consumed and no gas is evolved, add an additional 10 g of foil. Repeat until the foil is no longer consumed and allow the gas to evolve for 24 hours.

3. Decant the supernatant liquid and discard.

4. Transfer the elemental mercury that has settled to the bottom of the vessel to a storage container.

5. The mercury can be sent to a mercury reclaiming plant. It must not be discarded.

14.0 *References for SO_2 Method.*

1. Quality Assurance Handbook for Air Pollution Measurement Systems, Volume I, Principles. EPA–600/9–76–005, U.S. Environmental Protection Agency, Research Triangle Park, NC 27711, 1976.

2. Quality Assurance Handbook for Air Pollution Measurement Systems, Volume II, Ambient Air Specific Methods. EPA–600/4–77–027a, U.S. Environmental Protection Agency, Research Triangle Park, NC 27711, 1977.

3. Dasqupta, P. K., and K. B. DeCesare. Stability of Sulfur Dioxide in Formaldehyde and Its Anomalous Behavior in Tetrachloromercurate (II). Submitted for publication in *Atmospheric Environment*, 1982.

4. West, P. W., and G. C. Gaeke. Fixation of Sulfur Dioxide as Disulfitomercurate (II) and Subsequent Colorimetric Estimation. Anal. Chem., 28:1816, 1956.

5. Ephraim, F. Inorganic Chemistry. P. C. L. Thorne and E. R. Roberts, Eds., 5th Edition, Interscience, 1948, p. 562.

6. Lyles, G. R., F. B. Dowling, and V. J. Blanchard. Quantitative Determination of Formaldehyde in the Parts Per Hundred Million Concentration Level. J. Air. Poll. Cont. Assoc., Vol. 15(106), 1965.

7. McKee, H. C., R. E. Childers, and O. Saenz, Jr. Collaborative Study of Reference Method for Determination of Sulfur Dioxide in the Atmosphere (Pararosaniline Method). EPA–APTD–0903, U.S. Environmental Protection Agency, Research Triangle Park, NC 27711, September 1971.

8. Urone, P., J. B. Evans, and C. M. Noyes. Tracer Techniques in Sulfur—Air Pollution Studies Apparatus and Studies of Sulfur Dioxide Colorimetric and Conductometric Methods. Anal. Chem., 37: 1104, 1965.

9. Bostrom, C. E. The Absorption of Sulfur Dioxide at Low Concentrations (pphm) Studied by an Isotopic Tracer Method. Intern. J. Air Water Poll., 9:333, 1965.

10. Scaringelli, F. P., B. E. Saltzman, and S. A. Frey. Spectrophotometric Determination of Atmospheric Sulfur Dioxide. Anal. Chem., 39: 1709, 1967.

11. Pate, J. B., B. E. Ammons, G. A. Swanson, and J. P. Lodge, Jr. Nitrite Interference in Spectrophotometric Determination of Atmospheric Sulfur Dioxide. Anal. Chem., 37:942, 1965.

12. Zurlo, N., and A. M. Griffini. Measurement of the Sulfur Dioxide Content of the Air in the Presence of Oxides of Nitrogen and Heavy Metals. Medicina Lavoro, 53:330, 1962.

13. Rehme, K. A., and F. P. Scaringelli. Effect of Ammonia on the Spectrophotometric Determination of Atmospheric Concentrations of Sulfur Dioxide. Anal. Chem., 47:2474, 1975.

14. McCoy, R. A., D. E. Camann, and H. C. McKee. Collaborative Study of Reference Method for Determination of Sulfur Dioxide in the Atmosphere (Pararosaniline Method) (24-Hour Sampling). EPA–650/4–74–027, U.S. Environmental Protection Agency, Research Triangle Park, NC 27711, December 1973.

15. Fuerst, R. G. Improved Temperature Stability of Sulfur Dioxide Samples Collected by the Federal Reference Method. EPA–600/4–78–018, U.S. Environmental Protection Agency, Research Triangle Park, NC 27711, April 1978.

16. Scaringelli, F. P., L. Elfers, D. Norris, and S. Hochheiser. Enhanced Stability of Sulfur Dioxide in Solution. Anal. Chem., 42:1818, 1970.

17. Martin, B. E. Sulfur Dioxide Bubbler Temperature Study. EPA–600/4–77–040, U.S. Environmental Protection Agency, Research Triangle Park, NC 27711, August 1977.

18. American Society for Testing and Materials. ASTM Standards, Water; Atmospheric Analysis. Part 23. Philadelphia, PA, October 1968, p. 226.

19. O'Keeffe, A. E., and G. C. Ortman. Primary Standards for Trace Gas Analysis. Anal. Chem., 38:760, 1966.

20. Scaringelli, F. P., S. A. Frey, and B. E. Saltzman. Evaluation of Teflon Permeation Tubes for Use with Sulfur Dioxide. Amer. Ind. Hygiene Assoc. J., 28:260, 1967.

21. Scaringelli, F. P., A. E. O'Keeffe, E. Rosenberg, and J. P. Bell, Preparation of Known Concentrations of Gases and Vapors With Permeation Devices Calibrated Gravimetrically. Anal. Chem., 42:871, 1970.

22. A Procedure for Establishing Traceability of Gas Mixtures to Certain National Bureau of Standards Standard Reference Materials. EPA–600/7–81–010, U.S. Environmental Protection Agency, Environmental Monitoring Systems Laboratory (MD–77), Research Triangle Park, NC 27711, January 1981.

[47 FR 54899, Dec. 6, 1982; 48 FR 17355, Apr. 22, 1983]

APPENDIX B TO PART 50—REFERENCE METHOD FOR THE DETERMINATION OF SUSPENDED PARTICULATE MATTER IN THE ATMOSPHERE (HIGH-VOLUME METHOD)

1.0 *Applicability.*

1.1 This method provides a measurement of the mass concentration of total suspended particulate matter (TSP) in ambient air for determining compliance with the primary and secondary national ambient air quality standards for particulate matter as specified in §50.6 and §50.7 of this chapter. The measurement process is nondestructive, and the size of the sample collected is usually adequate for subsequent chemical analysis. Quality assurance procedures and guidance are provided in part 58, appendixes A and B, of this chapter and in References 1 and 2.

2.0 *Principle.*

2.1 An air sampler, properly located at the measurement site, draws a measured quantity of ambient air into a covered housing and through a filter during a 24-hr (nominal) sampling period. The sampler flow rate and the geometry of the shelter favor the collection of particles up to 25–50 µm (aerodynamic diameter), depending on wind speed and direction.(*3*) The filters used are specified to have a minimum collection efficiency of 99 percent for 0.3 µm (DOP) particles (see Section 7.1.4).

2.2 The filter is weighed (after moisture equilibration) before and after use to determine the net weight (mass) gain. The total volume of air sampled, corrected to EPA standard conditions (25 °C, 760 mm Hg [101 kPa]), is determined from the measured flow rate and the sampling time. The concentration of total suspended particulate matter in the ambient air is computed as the mass of collected particles divided by the volume of air sampled, corrected to standard conditions, and is expressed in micrograms per standard cubic meter (µg/std m^3). For samples collected at temperatures and pressures significantly different than standard conditions, these corrected concentrations may differ substantially from actual concentrations (micrograms per actual cubic meter), particularly at high elevations. The actual particulate matter concentration can be calculated from the corrected concentration using the actual temperature and pressure during the sampling period.

3.0 *Range.*

3.1 The approximate concentration range of the method is 2 to 750 µg/std m^3. The upper limit is determined by the point at which the sampler can no longer maintain the specified

flow rate due to the increased pressure drop of the loaded filter. This point is affected by particle size distribution, moisture content of the collected particles, and variability from filter to filter, among other things. The lower limit is determined by the sensitivity of the balance (see Section 7.10) and by inherent sources of error (see Section 6).

3.2 At wind speeds between 1.3 and 4.5 m/sec (3 and 10 mph), the high-volume air sampler has been found to collect particles up to 25 to 50 µm, depending on wind speed and direction.(*3*) For the filter specified in Section 7.1, there is effectively no lower limit on the particle size collected.

4.0 *Precision.*

4.1 Based upon collaborative testing, the relative standard deviation (coefficient of variation) for single analyst precision (repeatability) of the method is 3.0 percent. The corresponding value for interlaboratory precision (reproducibility) is 3.7 percent.(*4*)

5.0 *Accuracy.*

5.1 The absolute accuracy of the method is undefined because of the complex nature of atmospheric particulate matter and the difficulty in determining the ''true'' particulate matter concentration. This method provides a measure of particulate matter concentration suitable for the purpose specified under Section 1.0, Applicability.

6.0 *Inherent Sources of Error.*

6.1 *Airflow variation.* The weight of material collected on the filter represents the (integrated) sum of the product of the instantaneous flow rate times the instantaneous particle concentration. Therefore, dividing this weight by the average flow rate over the sampling period yields the true particulate matter concentration only when the flow rate is constant over the period. The error resulting from a nonconstant flow rate depends on the magnitude of the instantaneous changes in the flow rate and in the particulate matter concentration. Normally, such errors are not large, but they can be greatly reduced by equipping the sampler with an automatic flow controlling mechanism that maintains constant flow during the sampling period. Use of a contant flow controller is recommended.*

6.2 *Air volume measurement.* If the flow rate changes substantially or nonuniformly during the sampling period, appreciable error in the estimated air volume may result from using the average of the presampling and postsampling flow rates. Greater air volume measurement accuracy may be achieved by (1) equipping the sampler with a flow controlling mechanism that maintains constant air flow during the sampling period,* (2) using a calibrated, continuous flow rate recording device to record the actual flow rate during the samping period and integrating the flow rate over the period, or (3) any other means that will accurately measure the total air volume sampled during the sampling period. Use of a continuous flow recorder is recommended, particularly if the sampler is not equipped with a constant flow controller.

6.3 *Loss of volatiles.* Volatile particles collected on the filter may be lost during subsequent sampling or during shipment and/or storage of the filter prior to the postsampling weighing.(*5*) Although such losses are largely unavoidable, the filter should be reweighed as soon after sampling as practical.

6.4 *Artifact particulate matter.* Artifact particulate matter can be formed on the surface of alkaline glass fiber filters by oxidation of acid gases in the sample air, resulting in a higher than true TSP determination.(*6 7*) This effect usually occurs early in the sample period and is a function of the filter pH and the presence of acid gases. It is generally believed to account for only a small percentage of the filter weight gain, but the effect may become more significant where relatively small particulate weights are collected.

6.5 *Humidity.* Glass fiber filters are comparatively insensitive to changes in relative humidity, but collected particulate matter can be hygroscopic.(*8*) The moisture conditioning procedure minimizes but may not completely eliminate error due to moisture.

6.6 *Filter handling.* Careful handling of the filter between the presampling and postsampling weighings is necessary to avoid errors due to loss of fibers or particles from the filter. A filter paper cartridge or cassette used to protect the filter can minimize handling errors. (See Reference 2, Section 2).

6.7 *Nonsampled particulate matter.* Particulate matter may be deposited on the filter by wind during periods when the sampler is inoperative. (*9*) It is recommended that errors from this source be minimized by an automatic mechanical device that keeps the filter covered during nonsampling periods, or by timely installation and retrieval of filters to minimize the nonsampling periods prior to and following operation.

6.8 *Timing errors.* Samplers are normally controlled by clock timers set to start and stop the sampler at midnight. Errors in the nominal 1,440-min sampling period may result from a power interruption during the sampling period or from a discrepancy between the start or stop time recorded on the filter information record and the actual start or stop time of the sampler. Such discrepancies may be caused by (1) poor resolution of the timer set-points, (2) timer error due to power interruption, (3) missetting of

*At elevated altitudes, the effectiveness of automatic flow controllers may be reduced because of a reduction in the maximum sampler flow.

the timer, or (4) timer malfunction. In general, digital electronic timers have much better set-point resolution than mechanical timers, but require a battery backup system to maintain continuity of operation after a power interruption. A continuous flow recorder or elapsed time meter provides an indication of the sampler run-time, as well as indication of any power interruption during the sampling period and is therefore recommended.

6.9 *Recirculation of sampler exhaust.* Under stagnant wind conditions, sampler exhaust air can be resampled. This effect does not appear to affect the TSP measurement substantially, but may result in increased carbon and copper in the collected sample. (*10*) This problem can be reduced by ducting the exhaust air well away, preferably downwind, from the sampler.

7.0 *Apparatus.*

(See References 1 and 2 for quality assurance information.)

NOTE: Samplers purchased prior to the effective date of this amendment are not subject to specifications preceded by (†).

7.1 *Filter.* (Filters supplied by the Environmental Protection Agency can be assumed to meet the following criteria. Additional specifications are required if the sample is to be analyzed chemically.)

7.1.1 *Size:* 20.3±0.2×25.4±0.2 cm (nominal 8×10 in).

7.1.2 *Nominal exposed area:* 406.5 cm^2 (63 in^2).

7.1.3. *Material:* Glass fiber or other relatively inert, nonhygroscopic material. (*8*)

7.1.4 *Collection efficiency:* 99 percent minimum as measured by the DOP test (ASTM–2986) for particles of 0.3 µm diameter.

7.1.5 *Recommended pressure drop range:* 42–54 mm Hg (5.6–7.2 kPa) at a flow rate of 1.5 std m^3/min through the nominal exposed area.

7.1.6 *pH:* 6 to 10. (*11*)

7.1.7 *Integrity:* 2.4 mg maximum weight loss. (*11*)

7.1.8 *Pinholes:* None.

7.1.9 *Tear strength:* 500 g minimum for 20 mm wide strip cut from filter in weakest dimension. (See ASTM Test D828–60).

7.1.10 *Brittleness:* No cracks or material separations after single lengthwise crease.

7.2 *Sampler.* The air sampler shall provide means for drawing the air sample, via reduced pressure, through the filter at a uniform face velocity.

7.2.1 The sampler shall have suitable means to:

a. Hold and seal the filter to the sampler housing.

b. Allow the filter to be changed conveniently.

c. Preclude leaks that would cause error in the measurement of the air volume passing through the filter.

d. (†) Manually adjust the flow rate to accommodate variations in filter pressure drop and site line voltage and altitude. The adjustment may be accomplished by an automatic flow controller or by a manual flow adjustment device. Any manual adjustment device must be designed with positive detents or other means to avoid unintentional changes in the setting.

7.2.2 *Minimum sample flow rate, heavily loaded filter:* 1.1 m^3/min (39 ft^3/min).‡

7.2.3 *Maximum sample flow rate, clean filter:* 1.7 m^3/min (60 ft^3/min).‡

7.2.4 *Blower Motor:* The motor must be capable of continuous operation for 24-hr periods.

7.3 *Sampler shelter.*

7.3.1 The sampler shelter shall:

a. Maintain the filter in a horizontal position at least 1 m above the sampler supporting surface so that sample air is drawn downward through the filter.

b. Be rectangular in shape with a gabled roof, similar to the design shown in Figure 1.

c. Cover and protect the filter and sampler from precipitation and other weather.

d. Discharge exhaust air at least 40 cm from the sample air inlet.

e. Be designed to minimize the collection of dust from the supporting surface by incorporating a baffle between the exhaust outlet and the supporting surface.

7.3.2 The sampler cover or roof shall overhang the sampler housing somewhat, as shown in Figure 1, and shall be mounted so as to form an air inlet gap between the cover and the sampler housing walls. † This sample air inlet should be approximately uniform on all sides of the sampler. † The area of the sample air inlet must be sized to provide an effective particle capture air velocity of between 20 and 35 cm/sec at the recommended operational flow rate. The capture velocity is the sample air flow rate divided by the inlet area measured in a horizontal plane at the lower edge of the cover. † Ideally, the inlet area and operational flow rate should be selected to obtain a capture air velocity of 25 ±2 cm/sec.

7.4 *Flow rate measurement devices.*

7.4.1 The sampler shall incorporate a flow rate measurement device capable of indicating the total sampler flow rate. Two common types of flow indicators covered in the calibration procedure are (1) an electronic mass flowmeter and (2) an orifice or orifices

(†) See note at beginning of Section 7 of this appendix.

‡ These specifications are in actual air volume units; to convert to EPA standard air volume units, multiply the specifications by $(P_b/P_{std})(298/T)$ where P_b and T are the barometric pressure in mm Hg (or kPa) and the temperature in K at the sampler, and P_{std} is 760 mm Hg (or 101 kPa).

located in the sample air stream together with a suitable pressure indicator such as a manometer, or aneroid pressure gauge. A pressure recorder may be used with an orifice to provide a continuous record of the flow. Other types of flow indicators (including rotameters) having comparable precision and accuracy are also acceptable.

7.4.2 † The flow rate measurement device must be capable of being calibrated and read in units corresponding to a flow rate which is readable to the nearest 0.02 std m^3/min over the range 1.0 to 1.8 std m^3/min.

7.5 *Thermometer,* to indicate the approximate air temperature at the flow rate measurement orifice, when temperature corrections are used.

7.5.1 *Range:* −40° to +50 °C (223–323 K).

7.5.2 *Resolution:* 2 °C (2 K).

7.6 *Barometer,* to indicate barometric pressure at the flow rate measurement orifice, when pressure corrections are used.

7.6.1 *Range:* 500 to 800 mm Hg (66–106 kPa).

7.6.2 *Resolution:* ±5 mm Hg (0.67 kPa).

7.7 *Timing/control device.*

7.7.1 The timing device must be capable of starting and stopping the sampler to obtain an elapsed run-time of 24 hr ±1 hr (1,440 ±60 min).

7.7.2 *Accuracy of time setting:* ±30 min, or better. (See Section 6.8).

7.8 *Flow rate transfer standard,* traceable to a primary standard. (See Section 9.2.)

7.8.1 *Approximate range:* 1.0 to 1.8 m^3/min.

7.8.2 *Resolution:* 0.02 m^3/min.

7.8.3 *Reproducibility:* ±2 percent (2 times coefficient of variation) over normal ranges of ambient temperature and pressure for the stated flow rate range. (See Reference 2, Section 2.)

7.8.4 *Maximum pressure drop at 1.7 std m^3/*min; 50 cm H_2O (5 kPa).

7.8.5 The flow rate transfer standard must connect without leaks to the inlet of the sampler and measure the flow rate of the total air sample.

7.8.6 The flow rate transfer standard must include a means to vary the sampler flow rate over the range of 1.0 to 1.8 m^3/min (35–64 ft^3/min) by introducing various levels of flow resistance between the sampler and the transfer standard inlet.

7.8.7 The conventional type of flow transfer standard consists of: An orifice unit with adapter that connects to the inlet of the sampler, a manometer or other device to measure orifice pressure drop, a means to vary the flow through the sampler unit, a thermometer to measure the ambient temperature, and a barometer to measure ambient pressure. Two such devices are shown in Figures 2a and 2b. Figure 2a shows multiple fixed resistance plates, which necessitate disassembly of the unit each time the flow resistance is changed. A preferable design, illustrated in Figure 2b, has a variable flow restriction that can be adjusted externally without disassembly of the unit. Use of a conventional, orifice-type transfer standard is assumed in the calibration procedure (Section 9). However, the use of other types of transfer standards meeting the above specifications, such as the one shown in Figure 2c, may be approved; see the note following Section 9.1.

7.9 *Filter conditioning environment*

7.9.1 *Controlled temperature:* between 15° and 30 °C with less than ±3 °C variation during equilibration period.

7.9.2 *Controlled humidity:* Less than 50 percent relative humidity, constant within ±5 percent.

7.10 *Analytical balance.*

7.10.1 *Sensitivity:* 0.1 mg.

7.10.2 Weighing chamber designed to accept an unfolded 20.3×25.4 cm (8×10 in) filter.

7.11 *Area light source,* similar to X-ray film viewer, to backlight filters for visual inspection.

7.12 *Numbering device,* capable of printing identification numbers on the filters before they are placed in the filter conditioning environment, if not numbered by the supplier.

8.0 *Procedure.*

(See References 1 and 2 for quality assurance information.)

8.1 Number each filter, if not already numbered, near its edge with a unique identification number.

8.2 Backlight each filter and inspect for pinholes, particles, and other imperfections; filters with visible imperfections must not be used.

8.3 Equilibrate each filter in the conditioning environment for at least 24-hr.

8.4 Following equilibration, weigh each filter to the nearest milligram and record this tare weight (W_i) with the filter identification number.

8.5 Do not bend or fold the filter before collection of the sample.

8.6 Open the shelter and install a numbered, preweighed filter in the sampler, following the sampler manufacturer's instructions. During inclement weather, precautions must be taken while changing filters to prevent damage to the clean filter and loss of sample from or damage to the exposed filter. Filter cassettes that can be loaded and unloaded in the laboratory may be used to minimize this problem (See Section 6.6).

8.7 Close the shelter and run the sampler for at least 5 min to establish run-temperature conditions.

8.8 Record the flow indicator reading and, if needed, the barometric pressure (P_3) and the ambient temperature (T_3) see NOTE following step 8.12). Stop the sampler. Determine the sampler flow rate (see Section 10.1); if it is outside the acceptable range (1.1 to 1.7 m^3/min [39–60 ft^3/min]), use a different filter, or adjust the sampler flow rate. Warning: Substantial flow adjustments may affect the

calibration of the orifice-type flow indicators and may necessitate recalibration.

8.9 Record the sampler identification information (filter number, site location or identification number, sample date, and starting time).

8.10 Set the timer to start and stop the sampler such that the sampler runs 24-hrs, from midnight to midnight (local time).

8.11 As soon as practical following the sampling period, run the sampler for at least 5 min to again establish run-temperature conditions.

8.12 Record the flow indicator reading and, if needed, the barometric pressure (P_3) and the ambient temperature (T_3).

NOTE: No onsite pressure or temperature measurements are necessary if the sampler flow indicator does not require pressure or temperature corrections (e.g., a mass flowmeter) or if average barometric pressure and seasonal average temperature for the site are incorporated into the sampler calibration (see step 9.3.9). For individual pressure and temperature corrections, the ambient pressure and temperature can be obtained by onsite measurements or from a nearby weather station. Barometric pressure readings obtained from airports must be station pressure, not corrected to sea level, and may need to be corrected for differences in elevation between the sampler site and the airport. For samplers having flow recorders but not constant flow controllers, the average temperature and pressure at the site *during the sampling period* should be estimated from weather bureau or other available data.

8.13 Stop the sampler and carefully remove the filter, following the sampler manufacturer's instructions. Touch only the outer edges of the filter. See the precautions in step 8.6.

8.14 Fold the filter in half lengthwise so that only surfaces with collected particulate matter are in contact and place it in the filter holder (glassine envelope or manila folder).

8.15 Record the ending time or elapsed time on the filter information record, either from the stop set-point time, from an elapsed time indicator, or from a continuous flow record. The sample period must be 1,440 ± 60 min. for a valid sample.

8.16 Record on the filter information record any other factors, such as meteorological conditions, construction activity, fires or dust storms, etc., that might be pertinent to the measurement. If the sample is known to be defective, void it at this time.

8.17 Equilibrate the exposed filter in the conditioning environment for at least 24-hrs.

8.18 Immediately after equilibration, reweigh the filter to the nearest milligram and record the gross weight with the filter identification number. See Section 10 for TSP concentration calculations.

9.0 *Calibration.*

9.1 Calibration of the high volume sampler's flow indicating or control device is necessary to establish traceability of the field measurement to a primary standard via a flow rate transfer standard. Figure 3a illustrates the certification of the flow rate transfer standard and Figure 3b illustrates its use in calibrating a sampler flow indicator. Determination of the corrected flow rate from the sampler flow indicator, illustrated in Figure 3c, is addressed in Section 10.1

NOTE: The following calibration procedure applies to a conventional orifice-type flow transfer standard and an orifice-type flow indicator in the sampler (the most common types). For samplers using a pressure recorder having a square-root scale, 3 other acceptable calibration procedures are provided in Reference 12. Other types of transfer standards may be used if the manufacturer or user provides an appropriately modified calibration procedure that has been approved by EPA under Section 2.8 of appendix C to part 58 of this chapter.

9.2 *Certification of the flow rate transfer standard.*

9.2.1 *Equipment required:* Positive displacement standard volume meter traceable to the National Bureau of Standards (such as a Roots meter or equivalent), stop-watch, manometer, thermometer, and barometer.

9.2.2 Connect the flow rate transfer standard to the inlet of the standard volume meter. Connect the manometer to measure the pressure at the inlet of the standard volume meter. Connect the orifice manometer to the pressure tap on the transfer standard. Connect a high-volume air pump (such as a high-volume sampler blower) to the outlet side of the standard volume meter. See Figure 3a.

9.2.3 Check for leaks by temporarily clamping both manometer lines (to avoid fluid loss) and blocking the orifice with a large-diameter rubber stopper, wide cellophane tape, or other suitable means. Start the high-volume air pump and note any change in the standard volume meter reading. The reading should remain constant. If the reading changes, locate any leaks by listening for a whistling sound and/or retightening all connections, making sure that all gaskets are properly installed.

9.2.4 After satisfactorily completing the leak check as described above, unclamp both manometer lines and zero both manometers.

9.2.5 Achieve the appropriate flow rate through the system, either by means of the variable flow resistance in the transfer standard or by varying the voltage to the air pump. (Use of resistance plates as shown in Figure 1a is discouraged because the above leak check must be repeated each time a new resistance plate is installed.) At least five different but constant flow rates, evenly distributed, with at least three in the specified

flow rate interval (1.1 to 1.7 m^3/min [39–60 ft^3/min]), are required.

9.2.6 Measure and record the certification data on a form similar to the one illustrated in Figure 4 according to the following steps.

9.2.7 Observe the barometric pressure and record as P_1 (item 8 in Figure 4).

9.2.8 Read the ambient temperature in the vicinity of the standard volume meter and record it as T_1 (item 9 in Figure 4).

9.2.9 Start the blower motor, adjust the flow, and allow the system to run for at least 1 min for a constant motor speed to be attained.

9.2.10 Observe the standard volume meter reading and simultaneously start a stopwatch. Record the initial meter reading (V_i) in column 1 of Figure 4.

9.2.11 Maintain this constant flow rate until at least 3 m^3 of air have passed through the standard volume meter. Record the standard volume meter inlet pressure manometer reading as ΔP (column 5 in Figure 4), and the orifice manometer reading as ΔH (column 7 in Figure 4). Be sure to indicate the correct units of measurement.

9.2.12 After at least 3 m^3 of air have passed through the system, observe the standard volume meter reading while simultaneously stopping the stopwatch. Record the final meter reading (V_f) in column 2 and the elapsed time (t) in column 3 of Figure 4.

9.2.13 Calculate the volume measured by the standard volume meter at meter conditions of temperature and pressures as $V_m = V_f - V_i$. Record in column 4 of Figure 4.

9.2.14 Correct this volume to standard volume (std m^3) as follows:

$$V_{std} = V_m \frac{P_1 - \Delta P}{P_{std}} \frac{T_{std}}{T_1}$$

where:

V_{std} = standard volume, std m^3;

V_m = actual volume measured by the standard volume meter;

P_1 = barometric pressure during calibration, mm Hg or kPa;

ΔP = differential pressure at inlet to volume meter, mm Hg or kPa;

P_{std} = 760 mm Hg or 101 kPa;

T_{std} = 298 K;

T_1 = ambient temperature during calibration, K.

Calculate the standard flow rate (std m^3/min) as follows:

$$Q_{std} = \frac{V_{std}}{t}$$

where:

Q_{std} = standard volumetric flow rate, std m^3/min

t = elapsed time, minutes.

Record Q_{std} to the nearest 0.01 std m^3/min in column 6 of Figure 4.

9.2.15 Repeat steps 9.2.9 through 9.2.14 for at least four additional constant flow rates, evenly spaced over the approximate range of 1.0 to 1.8 std m^3/min (35–64 ft^3/min).

9.2.16 For each flow, compute

$\sqrt{\Delta\Delta H}\ (P_1/P_{std})(298/T_1)$

(column 7a of Figure 4) and plot these value against Q_{std} as shown in Figure 3a. Be sure to use consistent units (mm Hg or kPa) for barometric pressure. Draw the orifice transfer standard certification curve or calculate the linear least squares slope (m) and intercept (b) of the certification curve:

$\sqrt{\Delta\Delta H}\ (P_1/P_{std})(298/T_1)$

$= mQ_{std} + b$. See Figures 3 and 4. A certification graph should be readable to 0.02 std m^3/min.

9.2.17 Recalibrate the transfer standard annually or as required by applicable quality control procedures. (See Reference 2.)

9.3 *Calibration of sampler flow indicator.*

NOTE: For samplers equipped with a flow controlling device, the flow controller must be disabled to allow flow changes during calibration of the sampler's flow indicator, or the alternate calibration of the flow controller given in 9.4 may be used. For samplers using an orifice-type flow indicator downstream of the motor, do not vary the flow rate by adjusting the voltage or power supplied to the sampler.

9.3.1 A form similar to the one illustrated in Figure 5 should be used to record the calibration data.

9.3.2 Connect the transfer standard to the inlet of the sampler. Connect the orifice manometer to the orifice pressure tap, as illustrated in Figure 3b. Make sure there are no leaks between the orifice unit and the sampler.

9.3.3 Operate the sampler for at least 5 minutes to establish thermal equilibrium prior to the calibration.

9.3.4 Measure and record the ambient temperature, T_2, and the barometric pressure, P_2, during calibration.

9.3.5 Adjust the variable resistance or, if applicable, insert the appropriate resistance plate (or no plate) to achieve the desired flow rate.

9.3.6 Let the sampler run for at least 2 min to re-establish the run-temperature conditions. Read and record the pressure drop across the orifice (ΔH) and the sampler flow rate indication (I) in the appropriate columns of Figure 5.

9.3.7 Calculate $\sqrt{\Delta H}(P_2/P_{std})(298/T_2)$ and determine the flow rate at standard conditions (Q_{std}) either graphically from the certification curve or by calculating Q_{std} from the least square slope and intercept of the transfer standard's transposed certification curve: $Q_{std} = 1/m\ \sqrt{\Delta H}(P_2/P_{std})(298/T_2) - b$. Record the value of Q_{std} on Figure 5.

9.3.8 Repeat steps 9.3.5, 9.3.6, and 9.3.7 for several additional flow rates distributed over a range that includes 1.1 to 1.7 std m^3/min.

9.3.9 Determine the calibration curve by plotting values of the appropriate expression involving I, selected from table 1, against Q_{std}. The choice of expression from table 1 depends on the flow rate measurement device used (see Section 7.4.1) and also on whether the calibration curve is to incorporate geographic average barometric pressure (P_a) and seasonal average temperature (T_a) for the site to approximate actual pressure and temperature. Where P_a and T_a can be determined for a site for a seasonal period such that the actual barometric pressure and temperature at the site do not vary by more than ±60 mm Hg (8 kPa) from P_a or ±15 °C from T_a, respectively, then using P_a and T_a avoids the need for subsequent pressure and temperature calculation when the sampler is used. The geographic average barometric pressure (P_a) may be estimated from an altitude-pressure table or by making an (approximate) elevation correction of −26 mm Hg (−3.46 kPa) for each 305 m (1,000 ft) above sea level (760 mm Hg or 101 kPa). The seasonal average temperature (T_a) may be estimated from weather station or other records. Be sure to use consistent units (mm Hg or kPa) for barometric pressure.

9.3.10 Draw the sampler calibration curve or calculate the linear least squares slope (m), intercept (b), and correlation coefficient of the calibration curve: [Expression from table 1]= $mQ_{std}+b$. See Figures 3 and 5. Calibration curves should be readable to 0.02 std m^3/min.

9.3.11 For a sampler equipped with a flow controller, the flow controlling mechanism should be re-enabled and set to a flow near the lower flow limit to allow maximum control range. The sample flow rate should be verified at this time with a clean filter installed. Then add two or more filters to the sampler to see if the flow controller maintains a constant flow; this is particularly important at high altitudes where the range of the flow controller may be reduced.

9.4 Alternate calibration of flow-controlled samplers. A flow-controlled sampler may be calibrated solely at its controlled flow rate, provided that previous operating history of the sampler demonstrates that the flow rate is stable and reliable. In this case, the flow indicator may remain uncalibrated but should be used to indicate any relative change between initial and final flows, and the sampler should be recalibrated more often to minimize potential loss of samples because of controller malfunction.

9.4.1 Set the flow controller for a flow near the lower limit of the flow range to allow maximum control range.

9.4.2 Install a clean filter in the sampler and carry out steps 9.3.2, 9.3.3, 9.3.4, 9.3.6, and 9.3.7.

9.4.3 Following calibration, add one or two additional clean filters to the sampler, reconnect the transfer standard, and operate the sampler to verify that the controller maintains the same calibrated flow rate; this is particularly important at high altitudes where the flow control range may be reduced.

TABLE 1. EXPRESSIONS FOR PLOTTING SAMPLER CALIBRATION CURVES

Type of sampler flow rate measuring device	Expression: For actual pressure and temperature corrections	Expression: For incorporation of geographic average pressure and seasonal average temperature
Mass flowmeter	I	I
Orifice and pressure indicator	$\sqrt{I\left(\frac{P_2}{P_{std}}\right)\left(\frac{298}{T_2}\right)}$	$\sqrt{I\left(\frac{P_2}{P_a}\right)\left(\frac{T_a}{T_2}\right)}$
Rotameter, or orifice and pressure recorder having square root scale*	$I\sqrt{\left(\frac{P_2}{P_{std}}\right)\left(\frac{298}{T_2}\right)}$	$I\sqrt{\left(\frac{P_2}{P_a}\right)\left(\frac{T_a}{T_2}\right)}$

*This scale is recognizable by its nonuniform divisions and is the most commonly available for high-volume samplers.

TABLE 2. EXPRESSIONS FOR DETERMINING FLOW RATE DURING SAMPLER OPERATION

Type of sampler flow rate measuring device	Expression: For actual pressure and temperature corrections	Expression: For use when geographic average pressure and seasonal average temperature have been incorporated into the sampler calibration
Mass flowmeter	I	I
Orifice and pressure indicator	$\sqrt{I\left(\frac{P_3}{P_{std}}\right)\left(\frac{298}{T_3}\right)}$	$\sqrt{I}$
Rotameter, or orifice and pressure recorder having square root scale*	$I\sqrt{\left(\frac{P_3}{P_{std}}\right)\left(\frac{298}{T_3}\right)}$	I

*This scale is recognizable by its nonuniform divisions and is the most commonly available for high-volume samplers.

10.0 *Calculations of TSP Concentration.*

10.1 Determine the average sampler flow rate during the sampling period according to either 10.1.1 or 10.1.2 below.

10.1.1 For a sampler without a continuous flow recorder, determine the appropriate expression to be used from table 2 corresponding to the one from table 1 used in step 9.3.9. Using this appropriate expression, determine Q_{std} for the initial flow rate from the sampler calibration curve, either graphically or from the transposed regression equation:

Q_{std} =
1/m ([Appropriate expression from table 2] – b)

Similarly, determine Q_{std} from the final flow reading, and calculate the average flow Q_{std} as one-half the sum of the initial and final flow rates.

10.1.2 For a sampler with a continuous flow recorder, determine the average flow rate device reading, I, for the period. Determine the appropriate expression from table 2 corresponding to the one from table 1 used in step 9.3.9. Then using this expression and the average flow rate reading, determine Q_{std} from the sampler calibration curve, either graphically or from the transposed regression equation:

Q_{std} =
1/m ([Appropriate expression from table 2] – b)

If the trace shows substantial flow change during the sampling period, greater accuracy may be achieved by dividing the sampling period into intervals and calculating an average reading before determining Q_{std}.

10.2 Calculate the total air volume sampled as:

$V - Q_{std} \times t$

where:

V = total air volume sampled, in standard volume units, std m^3/;
Q_{std} = average standard flow rate, std m^3/min;
t = sampling time, min.

10.3 Calculate and report the particulate matter concentration as:

$$TSP = \frac{(W_f - W_i) \times 10^6}{V}$$

where:

TSP = mass concentration of total suspended particulate matter, µg/std m^3;
W_i = initial weight of clean filter, g;
W_f = final weight of exposed filter, g;
V = air volume sampled, converted to standard conditions, std m^3,
10^6 = conversion of g to µg.

10.4 If desired, the actual particulate matter concentration (see Section 2.2) can be calculated as follows:

$(TSP)_a = TSP\ (P_3/P_{std})(298/T_3)$

where:

$(TSP)_a$ = actual concentration at field conditions, µg/m^3;

TSP = concentration at standard conditions, μg/std m^3;
P_3 = average barometric pressure during sampling period, mm Hg;
P_{std} = 760 mn Hg (or 101 kPa);
T_3 = average ambient temperature during sampling period, K.

11.0 *References.*

1. Quality Assurance Handbook for Air Pollution Measurement Systems, Volume I, Principles. EPA–600/9–76–005, U.S. Environmental Protection Agency, Research Triangle Park, NC 27711, 1976.

2. Quality Assurance Handbook for Air Pollution Measurement Systems, Volume II, Ambient Air Specific Methods. EPA–600/4–77–027a, U.S. Environmental Protection Agency, Research Triangle Park, NC 27711, 1977.

3. Wedding, J. B., A. R. McFarland, and J. E. Cernak. Large Particle Collection Characteristics of Ambient Aerosol Samplers. Environ. Sci. Technol. *11:*387–390, 1977.

4. McKee, H. C., et al. Collaborative Testing of Methods to Measure Air Pollutants, I. The High-Volume Method for Suspended Particulate Matter. J. Air Poll. Cont. Assoc., 22 (342), 1972.

5. Clement, R. E., and F. W. Karasek. Sample Composition Changes in Sampling and Analysis of Organic Compounds in Aerosols. The Intern. J. Environ. Anal. Chem., 7:109, 1979.

6. Lee, R. E., Jr., and J. Wagman. A Sampling Anomaly in the Determination of Atmospheric Sulfuric Concentration. Am. Ind. Hygiene Assoc. J., 27:266, 1966.

7. Appel, B. R., et al. Interference Effects in Sampling Particulate Nitrate in Ambient Air. Atmospheric Environment, 13:319, 1979.

8. Tierney, G. P., and W. D. Conner. Hygroscopic Effects on Weight Determinations of Particulates Collected on Glass-Fiber Filters. Am. Ind. Hygiene Assoc. J., 28:363, 1967.

9. Chahal, H. S., and D. J. Romano. High-Volume Sampling Effect of Windborne Particulate Matter Deposited During Idle Periods. J. Air Poll. Cont. Assoc., Vol. 26 (885), 1976.

10. Patterson, R. K. Aerosol Contamination from High-Volume Sampler Exhaust. J. Air Poll. Cont. Assoc., Vol. 30 (169), 1980.

11. EPA Test Procedures for Determining pH and Integrity of High-Volume Air Filters. QAD/M–80.01. Available from the Methods Standardization Branch, Quality Assurance Division, Environmental Monitoring Systems Laboratory (MD–77), U.S. Environmental Protection Agency, Research Triangle Park, NC 27711, 1980.

12. Smith, F., P. S. Wohlschlegel, R. S. C. Rogers, and D. J. Mulligan. Investigation of Flow Rate Calibration Procedures Associated with the High-Volume Method for Determination of Suspended Particulates. EPA–600/4–78–047, U.S. Environmental Protection Agency, Research Triangle Park, NC, June 1978.

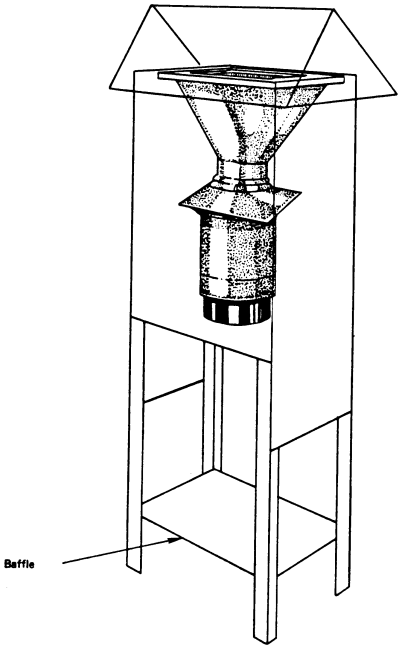

Figure 1. High-volume sampler in shelter.

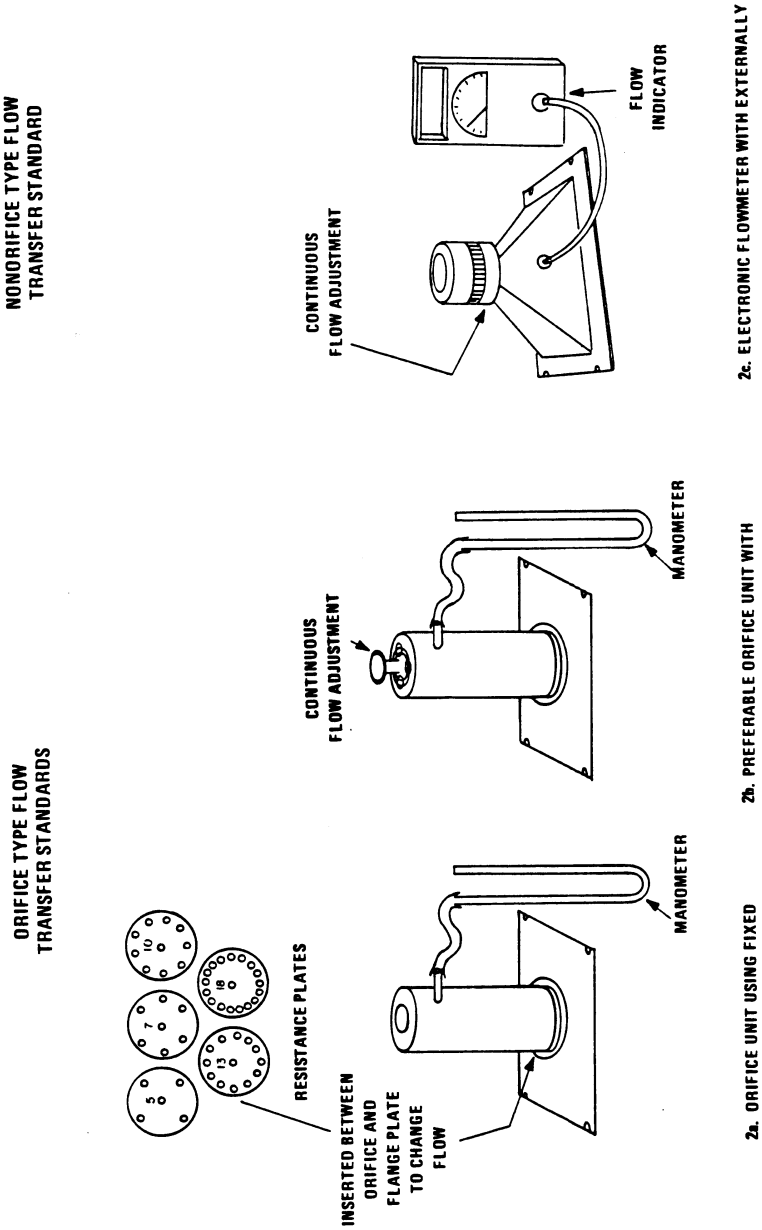

Figure 2. Various types of flow transfer standards. Note that all devices are designed to mount to the filter inlet area of the sampler.

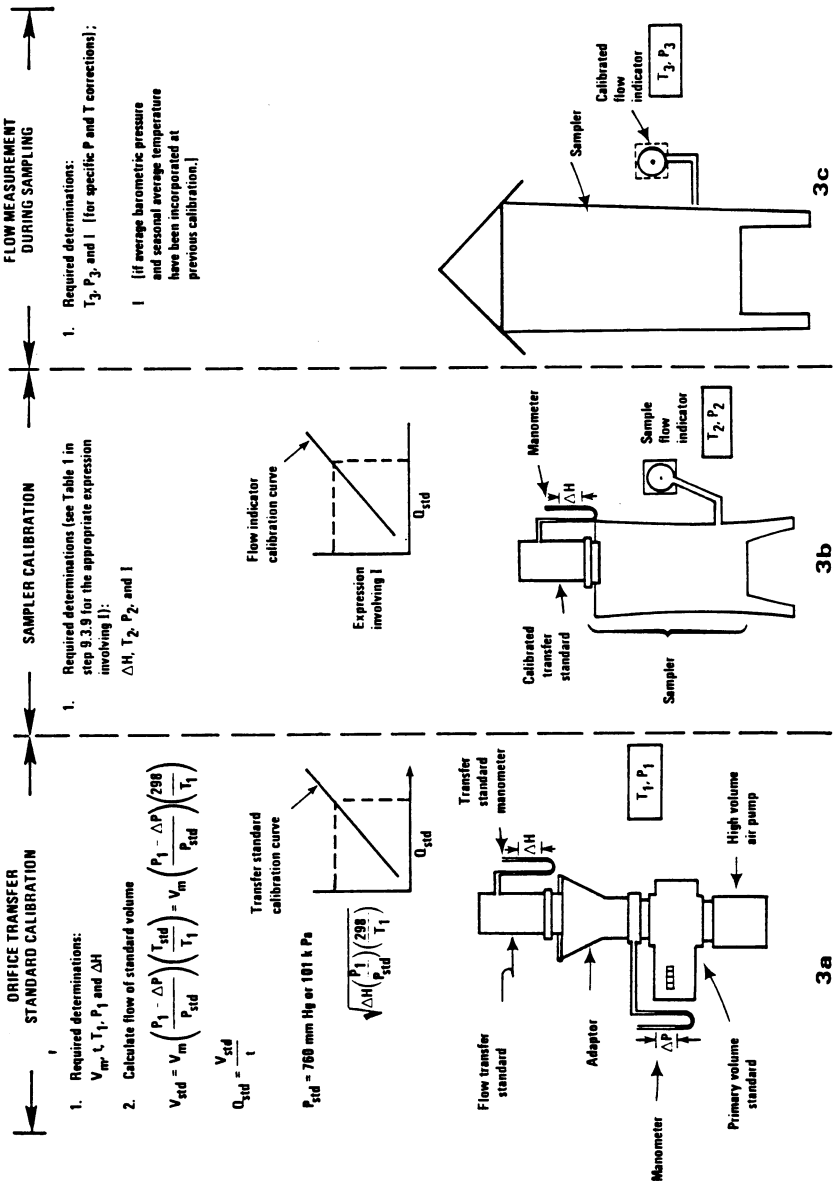

Figure 3. Illustration of the 3 steps in the flow measurement process.

ORIFICE TRANSFER STANDARD CERTIFICATION WORKSHEET

	(1)	(2)	(3)	(4)	(5)	(6)	(7)	(7a)
Run No.	Meter reading start V_i (m^3)	Meter reading stop V_f (m^3)	Sampling time t (min)	Volume measured V_m (m^3)	Differential pressure (at inlet to volume meter) ΔP (mm Hg or kPa)	(X) Flow rate Q_{std} (std m^3/min)	Pressure drop across orifice ΔH ☐ (in) or ☐ (cm) of water	(Y) $\sqrt{\Delta H\left(\frac{P_1}{P_{std}}\right)\left(\frac{298}{T_1}\right)}$
1								
2								
3								
4								
5								
6								

RECORDED CALIBRATION DATA

Standard volume meter no. _____

Transfer standard type: ☐ orifice ☐ other

Model No. _____ Serial No. _____

(8) P_1: _____ mm Hg (or kPa) (10) P_{std}: 760 mm Hg (or 101 kPa)

(9) T_1: _____ K (11) T_{std}: 298 K

Calibration performed by: _____

Date: _____

CALCULATION EQUATIONS

(1) $V_m = V_f - V_i$

(2) $V_{std} = V_m\left(\frac{P_1 - \Delta P}{P_{std}}\right)\left(\frac{T_{std}}{T_1}\right)$

(3) $Q_{std} = \frac{V_{std}}{t}$

LEAST SQUARES CALCULATIONS

Linear ($Y = mX + b$) regression equation of $Y = \sqrt{\Delta H(P_1/P_{std})(298/T_1)}$ on $X = Q_{std}$ for Orifice Calibration Unit (i.e., $\sqrt{\Delta H(P_1/P_{std})(298/T_1)} = mQ_{std} + b$)

Slope (m) = _____ Intercept (b) = _____ Correlation coefficient (r) = _____

To use for subsequent calibration: $X = \frac{1}{m}(Y-b)$; $\boxed{Q_{std} = \frac{1}{m}\left(\sqrt{\Delta H\left(\frac{P_2}{P_{std}}\right)\left(\frac{298}{T_2}\right)} - b\right)}$

Figure 4. Example of orifice transfer standard certification worksheet.

HIGH-VOLUME AIR SAMPLER CALIBRATION WORKSHEET

Site Location: _____ Barometric Pressure, P_2 mm Hg (or kPa) _____

Date: _____ Calibrated By: _____ Temperature, T_2 (K) _____

Sampler No. _____ Serial No. _____

Transfer std. type: _____ Serial No. _____

P_{std} = 760 mm Hg (or 101 kPa)

Optional: Average barometric pressure: P_a = _____

Seasonal average temperature: T_a = _____

No.	ΔH Pressure drop across orifice ☐ (in) or ☐ (cm) of water	$\sqrt{\Delta H\left(\frac{P_2}{P_{std}}\right)\left(\frac{298}{T_2}\right)}$	(X) Q_{std} (from orifice certification) std m³/min	I Sampler flow rate indication (arbitrary)	(Y) For specific pressure and temperature corrections (see Table 1) ☐ I or ☐ $\sqrt{I\left(\frac{P_2}{P_{std}}\right)\left(\frac{298}{T_2}\right)}$ or ☐ $I\sqrt{\left(\frac{P_2}{P_{std}}\right)\left(\frac{298}{T_2}\right)}$	For incorporation of average pressure and seasonal average temperature (see Table 1) ☐ I or ☐ $\sqrt{I\left(\frac{P_2}{P_a}\right)\left(\frac{T_a}{T_2}\right)}$ or ☐ $I\sqrt{\left(\frac{P_2}{P_a}\right)\left(\frac{T_a}{T_2}\right)}$
1						
2						
3						
4						
5						
6						

LEAST SQUARES CALCULATIONS

Linear regression of Y on X: Y = mX + b; Y = appropriate expression from Table 1; X = Q_{std}

Slope (m) = ____ Intercept (b) = ____ Correlation Coeff. (r) = _____

To determine subsequent flow rate during use: $X = \frac{1}{m}(Y-b)$; $Q_{std} = \frac{1}{m}$ ([appropriate expression from Table 2] − b)

Figure 5. Example of high-volume air sampler calibration worksheet.

[47 FR 54912, Dec. 6, 1982; 48 FR 17355, Apr. 22, 1983]

APPENDIX C TO PART 50—MEASUREMENT PRINCIPLE AND CALIBRATION PROCEDURE FOR THE MEASUREMENT OF CARBON MONOXIDE IN THE ATMOSPHERE (NON-DISPERSIVE INFRARED PHOTOMETRY)

MEASUREMENT PRINCIPLE

1. Measurements are based on the absorption of infrared radiation by carbon monoxide (CO) in a non-dispersive photometer. Infrared energy from a source is passed through a cell containing the gas sample to be analyzed, and the quantitative absorption of energy by CO in the sample cell is measured by a suitable detector. The photometer is sensitized to CO by employing CO gas in either the detector or in a filter cell in the optical path, thereby limiting the measured absorption to one or more of the characteristic wavelengths at which CO strongly absorbs. Optical filters or other means may

also be used to limit sensitivity of the photometer to a narrow band of interest. Various schemes may be used to provide a suitable zero reference for the photometer. The measured absorption is converted to an electrical output signal, which is related to the concentration of CO in the measurement cell.

2. An analyzer based on this principle will be considered a reference method only if it has been designated as a reference method in accordance with part 53 of this chapter.

3. Sampling considerations.

The use of a particle filter on the sample inlet line of an NDIR CO analyzer is optional and left to the discretion of the user or the manufacturer. Use of filter should depend on the analyzer's susceptibility to interference, malfunction, or damage due to particles.

CALIBRATION PROCEDURE

1. *Principle.* Either of two methods may be used for dynamic multipoint calibration of CO analyzers:

(1) One method uses a single certified standard cylinder of CO, diluted as necessary with zero air, to obtain the various calibration concentrations needed.

(2) The other method uses individual certified standard cylinders of CO for each concentration needed. Additional information on calibration may be found in Section 2.0.9 of Reference 1.

2. *Apparatus.* The major components and typical configurations of the calibration systems for the two calibration methods are shown in Figures 1 and 2.

2.1 Flow controller(s). Device capable of adjusting and regulating flow rates. Flow rates for the dilution method (Figure 1) must be regulated to ± 1%.

2.2 Flow meter(s). Calibrated flow meter capable of measuring and monitoring flow rates. Flow rates for the dilution method (Figure 1) must be measured with an accuracy of ± 2% of the measured value.

2.3 Pressure regulator(s) for standard CO cylinder(s). Regulator must have nonreactive diaphragm and internal parts and a suitable delivery pressure.

2.4 Mixing chamber. A chamber designed to provide thorough mixing of CO and diluent air for the dilution method.

2.5 Output manifold. The output manifold should be of sufficient diameter to insure an insignificant pressure drop at the analyzer connection. The system must have a vent designed to insure atmospheric pressure at the manifold and to prevent ambient air from entering the manifold.

3. *Reagents.*

3.1 CO concentration standard(s). Cylinder(s) of CO in air containing appropriate concentrations(s) of CO suitable for the selected operating range of the analyzer under calibration; CO standards for the dilution method may be contained in a nitrogen matrix if the zero air dilution ratio is not less than 100:1. The assay of the cylinder(s) must be traceable either to a National Bureau of Standards (NBS) CO in air Standard Reference Material (SRM) or to an NBS/EPA-approved commercially available Certified Reference Material (CRM). CRM's are described in Reference 2, and a list of CRM sources is available from the address shown for Reference 2. A recommended protocol for certifying CO gas cylinders against either a CO SRM or a CRM is given in Reference 1. CO gas cylinders should be recertified on a regular basis as determined by the local quality control program.

3.2 Dilution gas (zero air). Air, free of contaminants which will cause a detectable response on the CO analyzer. The zero air should contain <0.1 ppm CO. A procedure for generating zero air is given in Reference 1.

4. *Procedure Using Dynamic Dilution Method.*

4.1 Assemble a dynamic calibration system such as the one shown in Figure 1. All calibration gases including zero air must be introduced into the sample inlet of the analyzer system. For specific operating instructions refer to the manufacturer's manual.

4.2 Insure that all flowmeters are properly calibrated, under the conditions of use, if appropriate, against an authoritative standard such as a soap-bubble meter or wet-test meter. All volumetric flowrates should be corrected to 25 °C and 760 mm Hg (101 kPa). A discussion on calibration of flowmeters is given in Reference 1.

4.3 Select the operating range of the CO analyzer to be calibrated.

4.4 Connect the signal output of the CO analyzer to the input of the strip chart recorder or other data collection device. All adjustments to the analyzer should be based on the appropriate strip chart or data device readings. References to analyzer responses in the procedure given below refer to recorder or data device responses.

4.5 Adjust the calibration system to deliver zero air to the output manifold. The total air flow must exceed the total demand of the analyzer(s) connected to the output manifold to insure that no ambient air is pulled into the manifold vent. Allow the analyzer to sample zero air until a stable respose is obtained. After the response has stabilized, adjust the analyzer zero control. Offsetting the analyzer zero adjustments to +5 percent of scale is recommended to facilitate observing negative zero drift. Record the stable zero air response as Z_{CO}.

4.6 Adjust the zero air flow and the CO flow from the standard CO cylinder to provide a diluted CO concentration of approximately 80 percent of the upper range limit (URL) of the operating range of the analyzer. The total air flow must exceed the total demand of the analyzer(s) connected to the output manifold to insure that no ambient air is

pulled into the manifold vent. The exact CO concentration is calculated from:

$$[CO]_{OUT} = \frac{[CO]_{STD} \times F_{CO}}{F_D + F_{CO}} \quad (1)$$

where:

$[CO]_{OUT}$ = diluted CO concentration at the output manifold, ppm;

$[CO]_{STD}$ = concentration of the undiluted CO standard, ppm;

F_{CO} = flow rate of the CO standard corrected to 25 °C and 760 mm Hg, (101 kPa), L/min; and

F_D = flow rate of the dilution air corrected to 25 °C and 760 mm Hg, (101 kPa), L/min.

Sample this CO concentration until a stable response is obtained. Adjust the analyzer span control to obtain a recorder response as indicated below:

Recorder response (percent scale) =

$$\frac{[CO]_{OUT}}{URL} \times 100 + Z_{CO} \quad (2)$$

where:

URL = nominal upper range limit of the analyzer's operating range, and

Z_{CO} = analyzer response to zero air, % scale.

If substantial adjustment of the analyzer span control is required, it may be necessary to recheck the zero and span adjustments by repeating Steps 4.5 and 4.6. Record the CO concentration and the analyzer's response. 4.7 Generate several additional concentrations (at least three evenly spaced points across the remaining scale are suggested to verify linearity) by decreasing F_{CO} or increasing F_D. Be sure the total flow exceeds the analyzer's total flow demand. For each concentration generated, calculate the exact CO concentration using Equation (1). Record the concentration and the analyzer's response for each concentration. Plot the analyzer responses versus the corresponding CO concentrations and draw or calculate the calibration curve.

5. *Procedure Using Multiple Cylinder Method.* Use the procedure for the dynamic dilution method with the following changes:

5.1 Use a multi-cylinder system such as the typical one shown in Figure 2.

5.2 The flowmeter need not be accurately calibrated, provided the flow in the output manifold exceeds the analyzer's flow demand.

5.3 The various CO calibration concentrations required in Steps 4.6 and 4.7 are obtained without dilution by selecting the appropriate certified standard cylinder.

REFERENCES

1. Quality Assurance Handbook for Air Pollution Measurement Systems, Volume II—Ambient Air Specific Methods, EPA–600/4–77–027a, U.S. Environmental Protection Agency, Environmental Monitoring Systems Laboratory, Research Triangle Park, NC 27711, 1977.

2. A procedure for Establishing Traceability of Gas Mixtures to Certain National Bureau of Standards Standard Reference Materials. EPA–600/7–81–010, U.S. Environmental Protection Agency, Environmental Monitoring Systems Laboratory (MD–77), Research Triangle Park, NC 27711, January 1981.

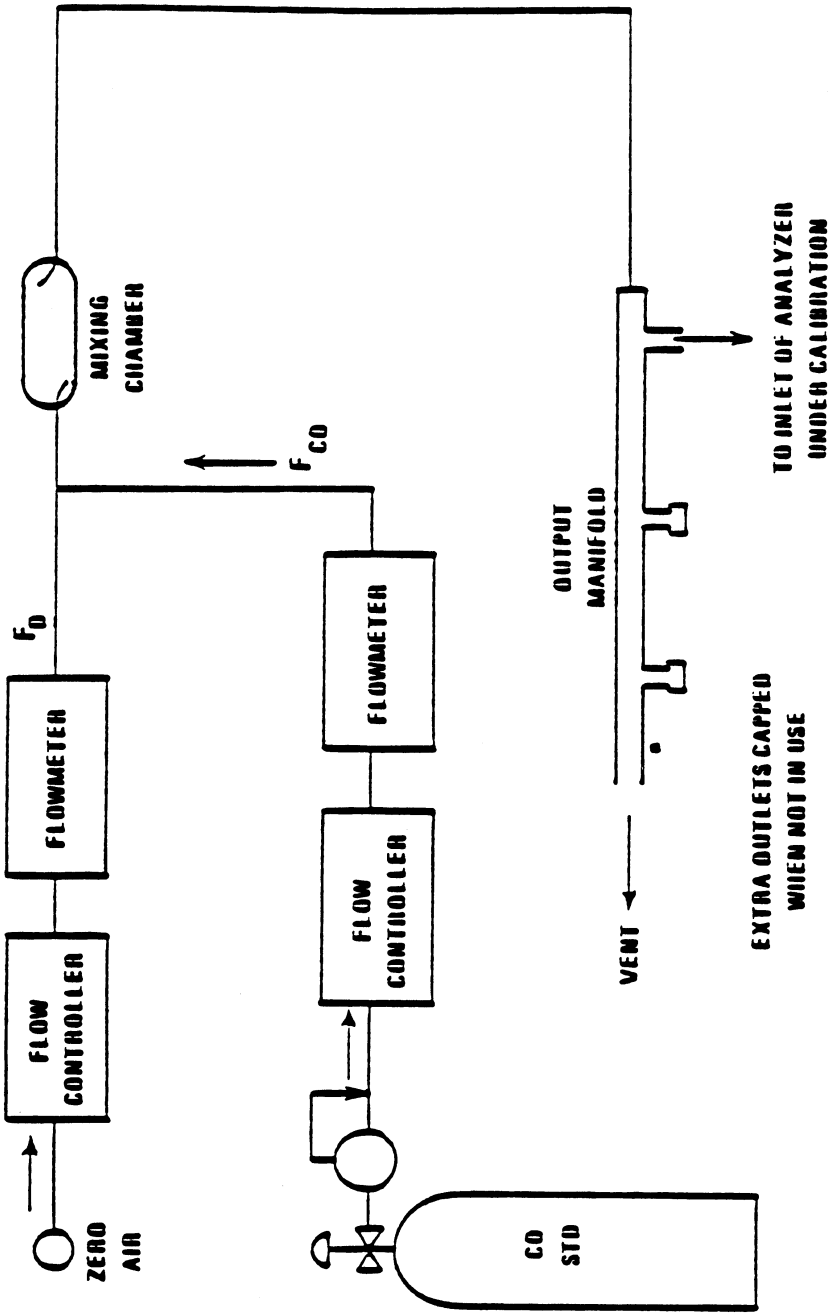

Figure 1. Dilution method for calibration of CO analyzers.

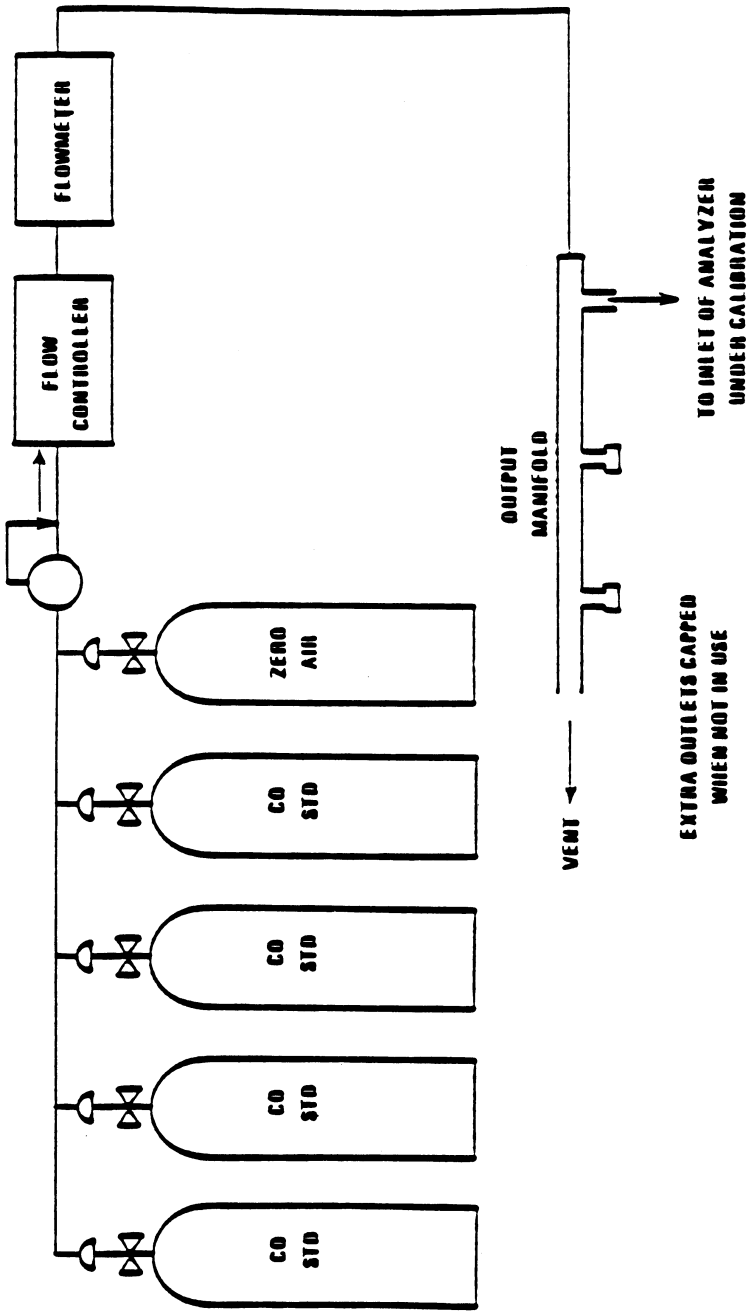

Figure 2. Multiple cylinder method for calibration of CO analyzers.

[47 FR 54922, Dec. 6, 1982; 48 FR 17355, Apr. 22, 1983]

APPENDIX D TO PART 50—MEASUREMENT PRINCIPLE AND CALIBRATION PROCEDURE FOR THE MEASUREMENT OF OZONE IN THE ATMOSPHERE

MEASUREMENT PRINCIPLE

1. Ambient air and ethylene are delivered simultaneously to a mixing zone where the ozone in the air reacts with the ethylene to emit light, which is detected by a photomultiplier tube. The resulting photocurrent is amplified and is either read directly or displayed on a recorder.

2. An analyzer based on this principle will be considered a reference method only if it has been designated as a reference method in accordance with part 53 of this chapter and calibrated as follows:

CALIBRATION PROCEDURE

1. *Principle.* The calibration procedure is based on the photometric assay of ozone (O_3) concentrations in a dynamic flow system. The concentration of O_3 in an absorption cell is determined from a measurement of the amount of 254 nm light absorbed by the sample. This determination requires knowledge of (1) the absorption coefficient (α) of O_3 at 254 nm, (2) the optical path length (l) through the sample, (3) the transmittance of the sample at a wavelength of 254 nm, and (4) the temperature (T) and pressure (P) of the sample. The transmittance is defined as the ratio I/I_0, where I is the intensity of light which passes through the cell and is sensed by the detector when the cell contains an O_3 sample, and I_0 is the intensity of light which passes through the cell and is sensed by the detector when the cell contains zero air. It is assumed that all conditions of the system, except for the contents of the absorption cell, are identical during measurement of I and I_0. The quantities defined above are related by the Beer-Lambert absorption law,

$$\text{Transmittance} = \frac{I}{I_O} = e^{-ac\ell} \qquad (1)$$

where:

α = absorption coefficient of O_3 at 254 nm=308 ±4 atm−1 cm−1 at 0 °C and 760 torr.[1, 2, 3, 4, 5, 6, 7]

c = O_3 concentration in atmospheres

l = optical path length in cm

In practice, a stable O_3 generator is used to produce O_3 concentrations over the required range. Each O_3 concentration is determined from the measurement of the transmittance (I/I_0) of the sample at 254 nm with a photometer of path length l and calculated from the equation,

$$c(\text{atm}) = -\frac{1}{\alpha l}(\ln I / I_O) \qquad (2a)$$

or

$$c(\text{ppm}) = -\frac{10^6}{\alpha l}(\ln I / I_O) \qquad (2b)$$

The calculated O_3 concentrations must be corrected for O_3 losses which may occur in the photometer and for the temperature and pressure of the sample.

2. *Applicability.* This procedure is applicable to the calibration of ambient air O_3 analyzers, either directly or by means of a transfer standard certified by this procedure. Transfer standards must meet the requirements and specifications set forth in Reference 8.

3. *Apparatus.* A complete UV calibration system consists of an ozone generator, an output port or manifold, a photometer, an appropriate source of zero air, and other components as necessary. The configuration must provide a stable ozone concentration at the system output and allow the photometer to accurately assay the output concentration to the precision specified for the photometer (3.1). Figure 1 shows a commonly used configuration and serves to illustrate the calibration procedure which follows. Other configurations may require appropriate variations in the procedural steps. All connections between components in the calibration system downstream of the O_3 generator should be of glass, Teflon, or other relatively inert materials. Additional information regarding the assembly of a UV photometric calibration apparatus is given in Reference 9. For certification of transfer standards which provide their own source of O_3, the transfer standard may replace the O_3 generator and possibly other components shown in Figure 1; see Reference 8 for guidance.

3.1 *UV photometer.* The photometer consists of a low-pressure mercury discharge lamp, (optional) collimation optics, an absorption cell, a detector, and signal-processing electronics, as illustrated in Figure 1. It must be capable of measuring the transmittance, I/I_0, at a wavelength of 254 nm with sufficient precision such that the standard deviation of the concentration measurements does not exceed the greater of 0.005 ppm or 3% of the concentration. Because the low-pressure mercury lamp radiates at several wavelengths, the photometer must incorporate suitable means to assure that no O_3 is generated in the cell by the lamp, and that at least 99.5% of the radiation sensed by the detector is 254 nm radiation. (This can be readily achieved by prudent selection of optical filter and detector response characteristics.) The length of the light path through the absorption cell must be known with an accuracy of at least 99.5%. In addition, the cell and associated plumbing must be designed to

minimize loss of O_3 from contact with cell walls and gas handling components. See Reference 9 for additional information.

3.2 *Air flow controllers.* Devices capable of regulating air flows as necessary to meet the output stability and photometer precision requirements.

3.3 *Ozone generator.* Device capable of generating stable levels of O_3 over the required concentration range.

3.4 *Output manifold.* The output manifold should be constructed of glass, Teflon, or other relatively inert material, and should be of sufficient diameter to insure a negligible pressure drop at the photometer connection and other output ports. The system must have a vent designed to insure atmospheric pressure in the manifold and to prevent ambient air from entering the manifold.

3.5 *Two-way valve.* Manual or automatic valve, or other means to switch the photometer flow between zero air and the O_3 concentration.

3.6 *Temperature indicator.* Accurate to ±1 °C.

3.7 *Barometer or pressure indicator.* Accurate to ±2 torr.

4. *Reagents.*

4.1 *Zero air.* The zero air must be free of contaminants which would cause a detectable response from the O_3 analyzer, and it should be free of NO, C_2H_4, and other species which react with O_3. A procedure for generating suitable zero air is given in Reference 9. As shown in Figure 1, the zero air supplied to the photometer cell for the I_0 reference measurement must be derived from the same source as the zero air used for generation of the ozone concentration to be assayed (I measurement). When using the photometer to certify a transfer standard having its own source of ozone, see Reference 8 for guidance on meeting this requirement.

5. *Procedure.*

5.1 *General operation.* The calibration photometer must be dedicated exclusively to use as a calibration standard. It should always be used with clean, filtered calibration gases, and never used for ambient air sampling. Consideration should be given to locating the calibration photometer in a clean laboratory where it can be stationary, protected from physical shock, operated by a responsible analyst, and used as a common standard for all field calibrations via transfer standards.

5.2 *Preparation.* Proper operation of the photometer is of critical importance to the accuracy of this procedure. The following steps will help to verify proper operation. The steps are not necessarily required prior to each use of the photometer. Upon initial operation of the photometer, these steps should be carried out frequently, with all quantitative results or indications recorded in a chronological record either in tabular form or plotted on a graphical chart. As the performance and stability record of the photometer is established, the frequency of these steps may be reduced consistent with the documented stability of the photometer.

5.2.1 *Instruction manual:* Carry out all set up and adjustment procedures or checks as described in the operation or instruction manual associated with the photometer.

5.2.2 *System check:* Check the photometer system for integrity, leaks, cleanliness, proper flowrates, etc. Service or replace filters and zero air scrubbers or other consumable materials, as necessary.

5.2.3 *Linearity:* Verify that the photometer manufacturer has adequately established that the linearity error of the photometer is less than 3%, or test the linearity by dilution as follows: Generate and assay an O_3 concentration near the upper range limit of the system (0.5 or 1.0 ppm), then accurately dilute that concentration with zero air and reassay it. Repeat at several different dilution ratios. Compare the assay of the original concentration with the assay of the diluted concentration divided by the dilution ratio, as follows

$$E = \frac{A_1 - A_2 / R}{A_1} \times 100\% \qquad (3)$$

where:

E = linearity error, percent

A_1 = assay of the original concentration

A_2 = assay of the diluted concentration

R = dilution ratio = flow of original concentration divided by the total flow

The linearity error must be less than 5%. Since the accuracy of the measured flowrates will affect the linearity error as measured this way, the test is not necessarily conclusive. Additional information on verifying linearity is contained in Reference 9.

5.2.4 *Intercomparison:* When possible, the photometer should be occasionally intercompared, either directly or via transfer standards, with calibration photometers used by other agencies or laboratories.

5.2.5 *Ozone losses:* Some portion of the O_3 may be lost upon contact with the photometer cell walls and gas handling components. The magnitude of this loss must be determined and used to correct the calculated O_3 concentration. This loss must not exceed 5%. Some guidelines for quantitatively determining this loss are discussed in Reference 9.

5.3 *Assay of O_3* concentrations.

5.3.1 Allow the photometer system to warm up and stabilizer.

5.3.2 Verify that the flowrate through the photometer absorption cell, F allows the cell to be flushed in a reasonably short period of time (2 liter/min is a typical flow). The precision of the measurements is inversely related to the time required for flushing, since the photometer drift error increases with time.

5.3.3 Insure that the flowrate into the output manifold is at least 1 liter/min greater than the total flowrate required by the photometer and any other flow demand connected to the manifold.

5.3.4 Insure that the flowrate of zero air, F_z, is at least 1 liter/min greater than the flowrate required by the photometer.

5.3.5 With zero air flowing in the output manifold, actuate the two-way valve to allow the photometer to sample first the manifold zero air, then F_z. The two photometer readings must be equal ($I=I_o$).

NOTE: In some commercially available photometers, the operation of the two-way valve and various other operations in section 5.3 may be carried out automatically by the photometer.

5.3.6 Adjust the O_3 generator to produce an O_3 concentration as needed.

5.3.7 Actuate the two-way valve to allow the photometer to sample zero air until the absorption cell is thoroughly flushed and record the stable measured value of I_o.

5.3.8 Actuate the two-way valve to allow the photometer to sample the ozone concentration until the absorption cell is thoroughly flushed and record the stable measured value of I.

5.3.9 Record the temperature and pressure of the sample in the photometer absorption cell. (See Reference 9 for guidance.)

5.3.10 Calculate the O_3 concentration from equation 4. An average of several determinations will provide better precision.

$$[O_3]_{OUT} = \left(\frac{-1}{al}\ln\frac{I}{I_O}\right)\left(\frac{T}{273}\right)\left(\frac{760)}{P}\right)\times\frac{10^6}{L} \quad (4)$$

where:

$[O_3]_{OUT}$ = O_3 concentration, ppm

α = absorption coefficient of O_3 at 254 nm=308 $atm^{-1}\ cm^{-1}$ at 0 °C and 760 torr

l = optical path length, cm

T = sample temperature, K

P = sample pressure, torr

L = correction factor for O_3 losses from 5.2.5=(1-fraction O_3 lost).

NOTE: Some commercial photometers may automatically evaluate all or part of equation 4. It is the operator's responsibility to verify that all of the information required for equation 4 is obtained, either automatically by the photometer or manually. For ''automatic'' photometers which evaluate the first term of equation 4 based on a linear approximation, a manual correction may be required, particularly at higher O_3 levels. See the photometer instruction manual and Reference 9 for guidance.

5.3.11 Obtain additional O_3 concentration standards as necessary by repeating steps 5.3.6 to 5.3.10 or by Option 1.

5.4 *Certification of transfer standards.* A transfer standard is certified by relating the output of the transfer standard to one or more ozone standards as determined according to section 5.3. The exact procedure varies depending on the nature and design of the transfer standard. Consult Reference 8 for guidance.

5.5 *Calibration of ozone analyzers.* Ozone analyzers are calibrated as follows, using ozone standards obtained directly according to section 5.3 or by means of a certified transfer standard.

5.5.1 Allow sufficient time for the O_3 analyzer and the photometer or transfer standard to warmup and stabilize.

5.5.2 Allow the O_3 analyzer to sample zero air until a stable response is obtained and adjust the O_3 analyzer's zero control. Offsetting the analyzer's zero adjustment to +5% of scale is recommended to facilitate observing negative zero drift. Record the stable zero air response as ''Z''.

5.5.3 Generate an O_3 concentration standard of approximately 80% of the desired upper range limit (URL) of the O_3 analyzer. Allow the O_3 analyzer to sample this O_3 concentration standard until a stable response is obtained.

5.5.4 Adjust the O_3 analyzer's span control to obtain a convenient recorder response as indicated below:

recorder response (%scale) =

$$\left(\frac{[O_3]_{OUT}}{URL}\times 100\right)+Z \quad (5)$$

where:

URL = upper range limit of the O_3 analyzer, ppm

Z = recorder response with zero air, % scale

Record the O_3 concentration and the corresponding analyzer response. If substantial adjustment of the span control is necessary, recheck the zero and span adjustments by repeating steps 5.5.2 to 5.5.4.

5.5.5 Generate several other O_3 concentration standards (at least 5 others are recommended) over the scale range of the O_3 analyzer by adjusting the O_3 source or by Option 1. For each O_3 concentration standard, record the O_3 and the corresponding analyzer response.

5.5.6 Plot the O_3 analyzer responses versus the corresponding O_3 concentrations and draw the O_3 analyzer's calibration curve or calculate the appropriate response factor.

5.5.7 *Option 1:* The various O_3 concentrations required in steps 5.3.11 and 5.5.5 may be obtained by dilution of the O_3 concentration generated in steps 5.3.6 and 5.5.3. With this option, accurate flow measurements are required. The dynamic calibration system may be modified as shown in Figure 2 to allow for dilution air to be metered in downstream of the O_3 generator. A mixing chamber between the O_3 generator and the output manifold is also required. The flowrate through the O_3 generator (F_o) and the dilution air flowrate

(F_D) are measured with a reliable flow or volume standard traceable to NBS. Each O_3 concentration generated by dilution is calculated from:

$$[O_3]'_{OUT} = [O_3]_{OUT}\left(\frac{F_O}{F_O + F_D}\right) \qquad (6)$$

where:

$[O_3]'_{OUT}$ = diluted O_3 concentration, ppm
F_0 = flowrate through the O_3 generator, liter/min
F_D = diluent air flowrate, liter/min

REFERENCES

1. E.C.Y. Inn and Y. Tanaka, ''Absorption coefficient of Ozone in the Ultraviolet and Visible Regions'', *J. Opt. Soc. Am., 43,* 870 (1953).

2. A. G. Hearn, ''Absorption of Ozone in the Ultraviolet and Visible Regions of the Spectrum'', *Proc. Phys. Soc.* (London), *78,* 932 (1961).

3. W. B. DeMore and O. Raper, ''Hartley Band Extinction Coefficients of Ozone in the Gas Phase and in Liquid Nitrogen, Carbon Monoxide, and Argon'', *J. Phys. Chem., 68,* 412 (1964).

4. M. Griggs, ''Absorption Coefficients of Ozone in the Ultraviolet and Visible Regions'', *J. Chem. Phys., 49,* 857 (1968).

5. K. H. Becker, U. Schurath, and H. Seitz, ''Ozone Olefin Reactions in the Gas Phase. 1. Rate Constants and Activation Energies'', *Int'l Jour. of Chem. Kinetics,* VI, 725 (1974).

6. M. A. A. Clyne and J. A. Coxom, ''Kinetic Studies of Oxy-halogen Radical Systems'', *Proc. Roy. Soc., A303,* 207 (1968).

7. J. W. Simons, R. J. Paur, H. A. Webster, and E. J. Bair, ''Ozone Ultraviolet Photolysis. VI. The Ultraviolet Spectrum'', *J. Chem. Phys., 59,* 1203 (1973).

8. Transfer Standards for Calibration of Ambient Air Monitoring Analyzers for Ozone, EPA publication number EPA–600/4–79–056, EPA, National Exposure Research Laboratory, Department E, (MD–77B), Research Triangle Park, NC 27711.

9. Technical Assistance Document for the Calibration of Ambient Ozone Monitors, EPA publication number EPA–600/4–79–057, EPA, National Exposure Research Laboratory, Department E, (MD–77B), Research Triangle Park, NC 27711.

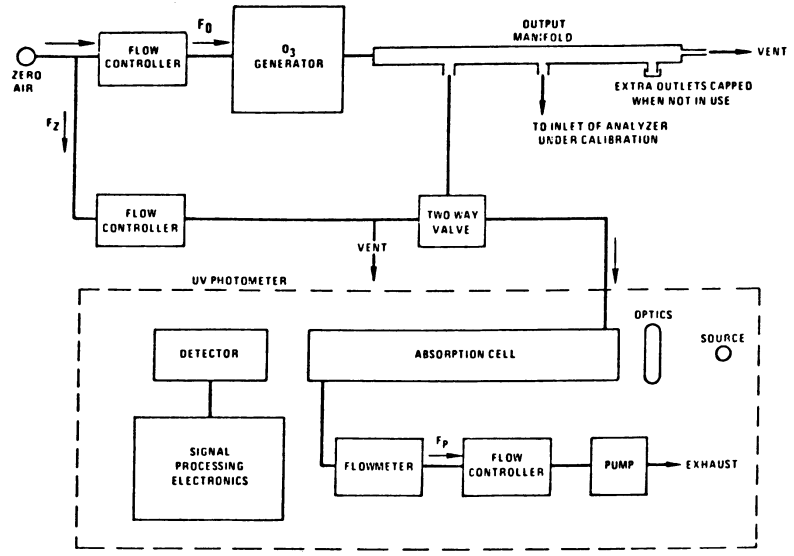

Figure 1. Schematic diagram of a typical UV photometric calibration system.

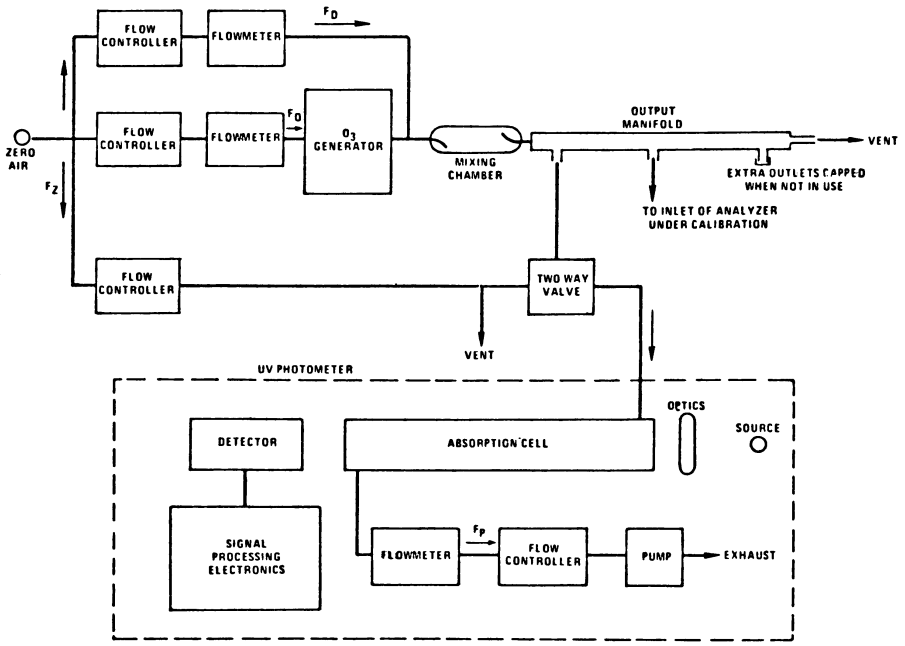

Figure 2. Schematic diagram of a typical UV photometric calibration system (OPTION 1)

[44 FR 8224, Feb. 8, 1979, as amended at 62 FR 38895, July 18, 1997]

APPENDIX E TO PART 50 [RESERVED]

APPENDIX F TO PART 50—MEASUREMENT PRINCIPLE AND CALIBRATION PROCEDURE FOR THE MEASUREMENT OF NITROGEN DIOXIDE IN THE ATMOSPHERE (GAS PHASE CHEMILUMINESCENCE)

PRINCIPLE AND APPLICABILITY

1. Atmospheric concentrations of nitrogen dioxide (NO_2) are measured indirectly by photometrically measuring the light intensity, at wavelengths greater than 600 nanometers, resulting from the chemiluminescent reaction of nitric oxide (NO) with ozone (O_3). (*1,2,3*) NO_2 is first quantitatively reduced to NO(*4,5,6*) by means of a converter. NO, which commonly exists in ambient air together with NO_2, passes through the converter unchanged causing a resultant total NO_X concentration equal to $NO+NO_2$. A sample of the input air is also measured without having passed through the converted. This latter NO measurement is subtracted from the former measurement ($NO+NO_2$) to yield the final NO_2 measurement. The NO and $NO+NO_2$ measurements may be made concurrently with dual systems, or cyclically with the same system provided the cycle time does not exceed 1 minute.

2. *Sampling considerations.*

2.1 Chemiluminescence $NO/NO_X/NO_2$ analyzers will respond to other nitrogen containing compounds, such as peroxyacetyl nitrate (PAN), which might be reduced to NO in the thermal converter. (*7*) Atmospheric concentrations of these potential interferences are generally low relative to NO_2 and valid NO_2 measurements may be obtained. In certain geographical areas, where the concentration of these potential interferences is known or suspected to be high relative to NO_2, the use of an equivalent method for the measurement of NO_2 is recommended.

2.2 The use of integrating flasks on the sample inlet line of chemiluminescence $NO/NO_X/NO_2$ analyzers is optional and left to couraged. The sample residence time between the sampling point and the analyzer should be kept to a minimum to avoid erroneous NO_2 measurements resulting from the reaction of ambient levels of NO and O_3 in the sampling system.

2.3 The use of particulate filters on the sample inlet line of chemiluminescence $NO/NO_X/NO_2$ analyzers is optional and left to the discretion of the user or the manufacturer.

Use of the filter should depend on the analyzer's susceptibility to interference, malfunction, or damage due to particulates. Users are cautioned that particulate matter concentrated on a filter may cause erroneous NO_2 measurements and therefore filters should be changed frequently.

3. An analyzer based on this principle will be considered a reference method only if it has been designated as a reference method in accordance with part 53 of this chapter.

CALIBRATION

1. *Alternative A*—Gas phase titration (GPT) of an NO standard with O_3.

Major equipment required: Stable O_3 generator. Chemiluminescence $NO/NO_X/NO_2$ analyzer with strip chart recorder(s). NO concentration standard.

1.1 *Principle.* This calibration technique is based upon the rapid gas phase reaction between NO and O_3 to produce stoichiometric quantities of NO_2 in accordance with the following equation: (*8*)

$$NO + O_3 \rightarrow NO_2 + O_2 \qquad (1)$$

The quantitative nature of this reaction is such that when the NO concentration is known, the concentration of NO_2 can be determined. Ozone is added to excess NO in a dynamic calibration system, and the NO channel of the chemiluminescence $NO/NO_X/NO_2$ analyzer is used as an indicator of changes in NO concentration. Upon the addition of O_3, the decrease in NO concentration observed on the calibrated NO channel is equivalent to the concentration of NO_2 produced. The amount of NO_2 generated may be varied by adding variable amounts of O_3 from a stable uncalibrated O_3 generator. (*9*)

1.2 *Apparatus.* Figure 1, a schematic of a typical GPT apparatus, shows the suggested configuration of the components listed below. All connections between components in the calibration system downstream from the O_3 generator should be of glass, Teflon®, or other non-reactive material.

1.2.1 *Air flow controllers.* Devices capable of maintaining constant air flows within ±2% of the required flowrate.

1.2.2 *NO flow controller.* A device capable of maintaining constant NO flows within ±2% of the required flowrate. Component parts in contact with the NO should be of a non-reactive material.

1.2.3 *Air flowmeters.* Calibrated flowmeters capable of measuring and monitoring air flowrates with an accuracy of ±2% of the measured flowrate.

1.2.4 *NO flowmeter.* A calibrated flowmeter capable of measuring and monitoring NO flowrates with an accuracy of ±2% of the measured flowrate. (Rotameters have been reported to operate unreliably when measuring low NO flows and are not recommended.)

1.2.5 *Pressure regulator for standard NO cylinder.* This regulator must have a nonreactive diaphragm and internal parts and a suitable delivery pressure.

1.2.6 *Ozone generator.* The generator must be capable of generating sufficient and stable levels of O_3 for reaction with NO to generate NO_2 concentrations in the range required. Ozone generators of the electric discharge type may produce NO and NO_2 and are not recommended.

1.2.7 *Valve.* A valve may be used as shown in Figure 1 to divert the NO flow when zero air is required at the manifold. The valve should be constructed of glass, Teflon®, or other nonreactive material.

1.2.8 *Reaction chamber.* A chamber, constructed of glass, Teflon®, or other nonreactive material, for the quantitative reaction of O_3 with excess NO. The chamber should be of sufficient volume (V_{RC}) such that the residence time (t_R) meets the requirements specified in 1.4. For practical reasons, t_R should be less than 2 minutes.

1.2.9 *Mixing chamber.* A chamber constructed of glass, Teflon®, or other nonreactive material and designed to provide thorough mixing of reaction products and diluent air. The residence time is not critical when the dynamic parameter specification given in 1.4 is met.

1.2.10 *Output manifold.* The output manifold should be constructed of glass, Teflon®, or other non-reactive material and should be of sufficient diameter to insure an insignificant pressure drop at the analyzer connection. The system must have a vent designed to insure atmospheric pressure at the manifold and to prevent ambient air from entering the manifold.

1.3 *Reagents.*

1.3.1 *NO concentration standard.* Gas cylinder standard containing 50 to 100 ppm NO in N_2 with less than 1 ppm NO_2. This standard must be traceable to a National Bureau of Standards (NBS) NO in N_2 Standard Reference Material (SRM 1683 or SRM 1684), an NBS NO_2 Standard Reference Material (SRM 1629), or an NBS/EPA-approved commercially available Certified Reference Material (CRM). CRM's are described in Reference 14, and a list of CRM sources is available from the address shown for Reference 14. A recommended protocol for certifying NO gas cylinders against either an NO SRM or CRM is given in section 2.0.7 of Reference 15. Reference 13 gives procedures for certifying an NO gas cylinder against an NBS NO_2 SRM and for determining the amount of NO_2 impurity in an NO cylinder.

1.3.2 *Zero air.* Air, free of contaminants which will cause a detectable response on the $NO/NO_X/NO_2$ analyzer or which might react with either NO, O_3, or NO_2 in the gas phase titration. A procedure for generating zero air is given in reference 13.

1.4 *Dynamic parameter specification.*

1.4.1 The O_3 generator air flowrate (F_0) and NO flowrate (F_{NO}) (see Figure 1) must be adjusted such that the following relationship holds:

$$P_R = [\mathrm{NO}]_{RC} \times t_R \ 2.75 \text{ ppm-minutes} \quad (2)$$

$$[\mathrm{NO}]_{RC} = [\mathrm{NO}]_{\mathrm{STD}} \left(\frac{F_{\mathrm{NO}}}{F_{\mathrm{O}} + F_{\mathrm{NO}}} \right) \quad (3)$$

$$t_R = \frac{V_{RC}}{F_O + F_{\mathrm{NO}}} < 2 \text{ minutes} \quad (4)$$

where:

P_R = dynamic parameter specification, determined empirically, to insure complete reaction of the available O_3, ppm-minute

$[NO]_{RC}$ = NO concentration in the reaction chamber, ppm

$_R$ = residence time of the reactant gases in the reaction chamber, minute

$[NO]_{STD}$ = concentration of the undiluted NO standard, ppm

F_{NO} = NO flowrate, scm^3/min

F_O = O_3 generator air flowrate, scm^3/min

V_{RC} = volume of the reaction chamber, scm^3

1.4.2 The flow conditions to be used in the GPT system are determined by the following procedure:

(a) Determine F_T, the total flow required at the output manifold (F_T=analyzer demand plus 10 to 50% excess).

(b) Establish $[NO]_{OUT}$ as the highest NO concentration (ppm) which will be required at the output manifold. $[NO]_{OUT}$ should be approximately equivalent to 90% of the upper range limit (*URL*) of the NO_2 concentration range to be covered.

(c) Determine F_{NO} as

$$F_{\mathrm{NO}} = \frac{[NO]_{\mathrm{OUT}} \times F_{\mathrm{T}}}{[NO]_{\mathrm{STD}}} \quad (5)$$

(d) Select a convenient or available reaction chamber volume. Initially, a trial V_{RC} may be selected to be in the range of approximately 200 to 500 scm^3.

(e) Compute FO as

$$F_{\mathrm{O}} = \sqrt{\frac{[\mathrm{NO}]_{\mathrm{STD}} \times F_{\mathrm{NO}} \times V_{\mathrm{RC}}}{2.75}} - F_{\mathrm{NO}} \quad (6)$$

(f) Compute t_R as

$$t_R = \frac{V_{RC}}{F_{\mathrm{O}} + F_{\mathrm{NO}}} \quad (7)$$

Verify that t_R < 2 minutes. If not, select a reaction chamber with a smaller V_{RC}.

(g) Compute the diluent air flowrate as

$$F_D = F_T' \ F_O' \ F_{\mathrm{NO}} \quad (8)$$

where:

F_D = diluent air flowrate, scm^3/min

(h) If F_O turns out to be impractical for the desired system, select a reaction chamber having a different V_{RC} and recompute F_O and F_D.

NOTE: A dynamic parameter lower than 2.75 ppm-minutes may be used if it can be determined empirically that quantitative reaction of O_3 with NO occurs. A procedure for making this determination as well as a more detailed discussion of the above requirements and other related considerations is given in reference 13.

1.5 *Procedure.*

1.5.1 Assemble a dynamic calibration system such as the one shown in Figure 1.

1.5.2 Insure that all flowmeters are calibrated under the conditions of use against a reliable standard such as a soap-bubble meter or wet-test meter. All volumetric flowrates should be corrected to 25 °C and 760 mm Hg. A discussion on the calibration of flowmeters is given in reference 13.

1.5.3 Precautions must be taken to remove O_2 and other contaminants from the NO pressure regulator and delivery system prior to the start of calibration to avoid any conversion of the standard NO to NO_2. Failure to do so can cause significant errors in calibration. This problem may be minimized by (1) carefully evacuating the regulator, when possible, after the regulator has been connected to the cylinder and before opening the cylinder valve; (2) thoroughly flushing the regulator and delivery system with NO after opening the cylinder valve; (3) not removing the regulator from the cylinder between calibrations unless absolutely necessary. Further discussion of these procedures is given in reference 13.

1.5.4 Select the operating range of the NO/NO_X/NO_2 analyzer to be calibrated. In order to obtain maximum precision and accuracy for NO_2 calibration, all three channels of the analyzer should be set to the same range. If operation of the NO and NO_X channels on higher ranges is desired, subsequent recalibration of the NO and NO_X channels on the higher ranges is recommended.

NOTE: Some analyzer designs may require identical ranges for NO, NO_X, and NO_2 during operation of the analyzer.

1.5.5 Connect the recorder output cable(s) of the NO/NO_X/NO_2 analyzer to the input terminals of the strip chart recorder(s). All adjustments to the analyzer should be performed based on the appropriate strip chart readings. References to analyzer responses in the procedures given below refer to recorder responses.

1.5.6 Determine the GPT flow conditions required to meet the dynamic parameter specification as indicated in 1.4.

1.5.7 Adjust the diluent air and O_3 generator air flows to obtain the flows determined in section 1.4.2. The total air flow must exceed the total demand of the analyzer(s) connected to the output manifold to insure that no ambient air is pulled into the manifold vent. Allow the analyzer to sample zero air until stable NO, NO_X, and NO_2 responses are obtained. After the responses have stabilized, adjust the analyzer zero control(s).

NOTE: Some analyzers may have separate zero controls for NO, NO_X, and NO_2. Other analyzers may have separate zero controls only for NO and NO_X, while still others may have only one zero control common to all three channels.

Offsetting the analyzer zero adjustments to +5 percent of scale is recommended to facilitate observing negative zero drift. Record the stable zero air responses as Z_{NO}, Z_{NOX}, and Z_{NO2}.

1.5.8 *Preparation of NO and NO_X calibration curves.*

1.5.8.1 *Adjustment of NO span control.* Adjust the NO flow from the standard NO cylinder to generate an NO concentration of approximately 80 percent of the upper range limit (*URL*) of the NO range. This exact NO concentration is calculated from:

$$[NO]_{OUT} = \frac{F_{NO} \times [NO]_{STD}}{F_{NO} + F_O + F_D} \qquad (9)$$

where:

$[NO]_{OUT}$ = diluted NO concentration at the output manifold, ppm

Sample this NO concentration until the NO and NO_X responses have stabilized. Adjust the NO span control to obtain a recorder response as indicated below:

recorder response (percent scale) =

$$\left(\frac{[NO]_{OUT}}{URL} \times 100\right) + Z_{NO} \qquad (10)$$

where:

URL = nominal upper range limit of the NO channel, ppm

NOTE: Some analyzers may have separate span controls for NO, NO_X, and NO_2. Other analyzers may have separate span controls only for NO and NO_X, while still others may have only one span control common to all three channels. When only one span control is available, the span adjustment is made on the NO channel of the analyzer.

If substantial adjustment of the NO span control is necessary, it may be necessary to recheck the zero and span adjustments by repeating steps 1.5.7 and 1.5.8.1. Record the NO concentration and the analyzer's NO response.

1.5.8.2 *Adjustment of NO_X span control.* When adjusting the analyzer's NO_X span control, the presence of any NO_2 impurity in the standard NO cylinder must be taken into account. Procedures for determining the amount of NO_2 impurity in the standard NO

cylinder are given in reference 13. The exact NO_X concentration is calculated from:

$$[NO_X]_{OUT} = \frac{F_{NO} \times \left([NO]_{STD} + [NO_2]_{IMP}\right)}{F_{NO} + F_O + F_D} \quad (11)$$

where:

$[NO_X]_{OUT}$ = diluted NO_X concentration at the output manifold, ppm

$[NO_2]_{IMP}$ = concentration of NO_2 impurity in the standard NO cylinder, ppm

Adjust the NO_X span control to obtain a recorder response as indicated below:

recorder response (% scale) =

$$\left(\frac{[NO_X]_{OUT}}{URL} \times 100\right) + Z_{NO_X} \quad (12)$$

NOTE: If the analyzer has only one span control, the span adjustment is made on the NO channel and no further adjustment is made here for NO_x.

If substantial adjustment of the NO_X span control is necessary, it may be necessary to recheck the zero and span adjustments by repeating steps 1.5.7 and 1.5.8.2. Record the NO_X concentration and the analyzer's NO_X response.

1.5.8.3 Generate several additional concentrations (at least five evenly spaced points across the remaining scale are suggested to verify linearity) by decreasing F_{NO} or increasing F_D. For each concentration generated, calculate the exact NO and NO_X concentrations using equations (9) and (11) respectively. Record the analyzer's NO and NO_X responses for each concentration. Plot the analyzer responses versus the respective calculated NO and NO_X concentrations and draw or calculate the NO and NO_X calibration curves. For subsequent calibrations where linearity can be assumed, these curves may be checked with a two-point calibration consisting of a zero air point and NO and NO_X concentrations of approximately 80% of the *URL*.

1.5.9 *Preparation of NO_2 calibration curve.*

1.5.9.1 Assuming the NO_2 zero has been properly adjusted while sampling zero air in step 1.5.7, adjust F_O and F_D as determined in section 1.4.2. Adjust F_{NO} to generate an NO concentration near 90% of the *URL* of the NO range. Sample this NO concentration until the NO and NO_X responses have stabilized. Using the NO calibration curve obtained in section 1.5.8, measure and record the NO concentration as $[NO]_{orig.}$ Using the NO_X calibration curve obtained in section 1.5.8, measure and record the NO_X concentration as $[NO_X]_{orig}$.

1.5.9.2 Adjust the O_3 generator to generate sufficient O_3 to produce a decrease in the NO concentration equivalent to approximately 80% of the URL of the NO_2 range. The decrease must not exceed 90% of the NO concentration determined in step 1.5.9.1. After the analyzer responses have stabilized, record the resultant NO and NO_X concentrations as $[NO]_{rem}$ and $[NO_X]_{rem}$.

1.5.9.3 Calculate the resulting NO_2 concentration from:

$$[NO_2]_{OUT} = [NO]_{orig} - [NO]_{rem} + \frac{F_{NO} \times [NO_2]_{IMP}}{F_{NO} + F_O + F_D} \quad (13)$$

where:

$[NO_2]_{OUT}$ = diluted NO_2 concentration at the output manifold, ppm

$[NO]_{orig}$ = original NO concentration, prior to addition of O_3, ppm

$[NO]_{rem}$ = NO concentration remaining after addition of O_3, ppm

Adjust the NO_2 span control to obtain a recorder response as indicated below:

recorder response (% scale) =

$$\left(\frac{[NO_2]_{OUT}}{URL} \times 100\right) + Z_{NO_2} \quad (14)$$

NOTE: If the analyzer has only one or two span controls, the span adjustments are made on the NO channel or NO and NO_X channels and no further adjustment is made here for NO_2.

If substantial adjustment of the NO_2 span control is necessary, it may be necessary to recheck the zero and span adjustments by repeating steps 1.5.7 and 1.5.9.3. Record the NO_2 concentration and the corresponding analyzer NO_2 and NO_X responses.

1.5.9.4 Maintaining the same F_{NO}, F_O, and F_D as in section 1.5.9.1, adjust the ozone generator to obtain several other concentrations of NO_2 over the NO_2 range (at least five evenly spaced points across the remaining scale are suggested). Calculate each NO_2 concentration using equation (13) and record the corresponding analyzer NO_2 and NO_X responses. Plot the analyzer's NO_2 responses versus the corresponding calculated NO_2 concentrations and draw or calculate the NO_2 calibration curve.

1.5.10 *Determination of converter efficiency.*

1.5.10.1 For each NO_2 concentration generated during the preparation of the NO_2 calibration curve (see section 1.5.9) calculate the concentration of NO_2 converted from:

$$[NO_2]_{CONV} = [NO_2]_{OUT} \cdot \left([NO_X]_{orig} - [NO_X]_{rem}\right) \qquad (15)$$

where:

$[NO_2]_{CONV}$ = concentration of NO_2 converted, ppm

$[NO_X]_{orig}$ = original NO_X concentration prior to addition of O_3, ppm

$[NO_X]_{rem}$ = NO_X concentration remaining after addition of O_3, ppm

NOTE: Supplemental information on calibration and other procedures in this method are given in reference 13.

Plot $[NO_2]_{CONV}$ (y-axis) versus $[NO_2]_{OUT}$ (x-axis) and draw or calculate the converter efficiency curve. The slope of the curve times 100 is the average converter efficiency, E_C. The average converter efficiency must be greater than 96%; if it is less than 96%, replace or service the converter.

2. *Alternative B*—NO_2 permeation device.

Major equipment required:

Stable O_3 generator.

Chemiluminescence $NO/NO_X/NO_2$ analyzer with strip chart recorder(s).

NO concentration standard.

NO_2 concentration standard.

2.1 *Principle.* Atmospheres containing accurately known concentrations of nitrogen dioxide are generated by means of a permeation device. (*10*) The permeation device emits NO_2 at a known constant rate provided the temperature of the device is held constant (±0.1 °C) and the device has been accurately calibrated at the temperature of use. The NO_2 emitted from the device is diluted with zero air to produce NO_2 concentrations suitable for calibration of the NO_2 channel of the $NO/NO_X/NO_2$ analyzer. An NO concentration standard is used for calibration of the NO and NO_X channels of the analyzer.

2.2 *Apparatus.* A typical system suitable for generating the required NO and NO_2 concentrations is shown in Figure 2. All connections between components downstream from the permeation device should be of glass, Teflon®, or other non-reactive material.

2.2.1 *Air flow controllers.* Devices capable of maintaining constant air flows within ±2% of the required flowrate.

2.2.2 *NO flow controller.* A device capable of maintaining constant NO flows within ±2% of the required flowrate. Component parts in contact with the NO must be of a non-reactive material.

2.2.3 *Air flowmeters.* Calibrated flowmeters capable of measuring and monitoring air flowrates with an accuracy of ±2% of the measured flowrate.

2.2.4 *NO flowmeter.* A calibrated flowmeter capable of measuring and monitoring NO flowrates with an accuracy of ±2% of the measured flowrate. (Rotameters have been reported to operate unreliably when measuring low NO flows and are not recommended.)

2.2.5 *Pressure regulator for standard NO cylinder.* This regulator must have a non-reactive diaphragm and internal parts and a suitable delivery pressure.

2.2.6 *Drier.* Scrubber to remove moisture from the permeation device air system. The use of the drier is optional with NO_2 permeation devices not sensitive to moisture. (Refer to the supplier's instructions for use of the permeation device.)

2.2.7 *Constant temperature chamber.* Chamber capable of housing the NO_2 permeation device and maintaining its temperature to within ±0.1 °C.

2.2.8 *Temperature measuring device.* Device capable of measuring and monitoring the temperature of the NO_2 permeation device with an accuracy of ±0.05 °C.

2.2.9 *Valves.* A valve may be used as shown in Figure 2 to divert the NO_2 from the permeation device when zero air or NO is required at the manifold. A second valve may be used to divert the NO flow when zero air or NO_2 is required at the manifold.

The valves should be constructed of glass, Teflon®, or other nonreactive material.

2.2.10 *Mixing chamber.* A chamber constructed of glass, Teflon®, or other nonreactive material and designed to provide thorough mixing of pollutant gas streams and diluent air.

2.2.11 *Output manifold.* The output manifold should be constructed of glass, Teflon®, or other non-reactive material and should be of sufficient diameter to insure an insignificant pressure drop at the analyzer connection. The system must have a vent designed to insure atmospheric pressure at the manifold and to prevent ambient air from entering the manifold.

2.3 *Reagents.*

2.3.1 *Calibration standards.* Calibration standards are required for both NO and NO_2. The reference standard for the calibration may be either an NO or NO_2 standard, and must be traceable to a National Bureau of Standards (NBS) NO in N_2 Standard Reference Material (SRM 1683 or SRM 1684), and NBS NO_2 Standard Reference Material (SRM 1629), or an NBS/EPA-approved commercially

available Certified Reference Material (CRM). CRM's are described in Reference 14, and a list of CRM sources is available from the address shown for Reference 14. Reference 15 gives recommended procedures for certifying an NO gas cylinder against an NO SRM or CRM and for certifying an NO_2 permeation device against an NO_2 SRM. Reference 13 contains procedures for certifying an NO gas cylinder against an NO_2 SRM and for certifying an NO_2 permeation device against an NO SRM or CRM. A procedure for determining the amount of NO_2 impurity in an NO cylinder is also contained in Reference 13. The NO or NO_2 standard selected as the reference standard must be used to certify the other standard to ensure consistency between the two standards.

2.3.1.1 *NO_2 Concentration standard.* A permeation device suitable for generating NO_2 concentrations at the required flow-rates over the required concentration range. If the permeation device is used as the reference standard, it must be traceable to an SRM or CRM as specified in 2.3.1. If an NO cylinder is used as the reference standard, the NO_2 permeation device must be certified against the NO standard according to the procedure given in Reference 13. The use of the permeation device should be in strict accordance with the instructions supplied with the device. Additional information regarding the use of permeation devices is given by Scaringelli et al. (11) and Rook et al. (12).

2.3.1.2 *NO Concentration standard.* Gas cylinder containing 50 to 100 ppm NO in N_2 with less than 1 ppm NO_2. If this cylinder is used as the reference standard, the cylinder must be traceable to an SRM or CRM as specified in 2.3.1. If an NO_2 permeation device is used as the reference standard, the NO cylinder must be certified against the NO_2 standard according to the procedure given in Reference 13. The cylinder should be recertified on a regular basis as determined by the local quality control program.

2.3.3 *Zero air.* Air, free of contaminants which might react with NO or NO_2 or cause a detectable response on the $NO/NO_X/NO_2$ analyzer. When using permeation devices that are sensitive to moisture, the zero air passing across the permeation device must be dry to avoid surface reactions on the device. (Refer to the supplier's instructions for use of the permeation device.) A procedure for generating zero air is given in reference 13.

2.4 *Procedure.*

2.4.1 Assemble the calibration apparatus such as the typical one shown in Figure 2.

2.4.2 Insure that all flowmeters are calibrated under the conditions of use against a reliable standard such as a soap bubble meter or wet-test meter. All volumetric flowrates should be corrected to 25 °C and 760 mm Hg. A discussion on the calibration of flowmeters is given in reference 13.

2.4.3 Install the permeation device in the constant temperature chamber. Provide a small fixed air flow (200–400 scm^3/min) across the device. The permeation device should always have a continuous air flow across it to prevent large buildup of NO_2 in the system and a consequent restabilization period. Record the flowrate as FP. Allow the device to stabilize at the calibration temperature for at least 24 hours. The temperature must be adjusted and controlled to within ±0.1 °C or less of the calibration temperature as monitored with the temperature measuring device.

2.4.4 Precautions must be taken to remove O_2 and other contaminants from the NO pressure regulator and delivery system prior to the start of calibration to avoid any conversion of the standard NO to NO_2. Failure to do so can cause significant errors in calibration. This problem may be minimized by

(1) Carefully evacuating the regulator, when possible, after the regulator has been connected to the cylinder and before opening the cylinder valve;

(2) Thoroughly flushing the regulator and delivery system with NO after opening the cylinder valve;

(3) Not removing the regulator from the cylinder between calibrations unless absolutely necessary. Further discussion of these procedures is given in reference 13.

2.4.5 Select the operating range of the NO/NO_X NO_2 analyzer to be calibrated. In order to obtain maximum precision and accuracy for NO_2 calibration, all three channels of the analyzer should be set to the same range. If operation of the NO and NO_X channels on higher ranges is desired, subsequent recalibration of the NO and NO_X channels on the higher ranges is recommended.

NOTE: Some analyzer designs may require identical ranges for NO, NO_X, and NO_2 during operation of the analyzer.

2.4.6 Connect the recorder output cable(s) of the $NO/NO_X/NO_2$ analyzer to the input terminals of the strip chart recorder(s). All adjustments to the analyzer should be performed based on the appropriate strip chart readings. References to analyzer responses in the procedures given below refer to recorder responses.

2.4.7 Switch the valve to vent the flow from the permeation device and adjust the diluent air flowrate, F_D, to provide zero air at the output manifold. The total air flow must exceed the total demand of the analyzer(s) connected to the output manifold to insure that no ambient air is pulled into the manifold vent. Allow the analyzer to sample zero air until stable NO, NO_X, and NO_2 responses are obtained. After the responses have stabilized, adjust the analyzer zero control(s).

NOTE: Some analyzers may have separate zero controls for NO, NO_X, and NO_2. Other analyzers may have separate zero controls only for NO and NO_X, while still others may

have only one zero common control to all three channels.

Offsetting the analyzer zero adjustments to +5% of scale is recommended to facilitate observing negative zero drift. Record the stable zero air responses as Z_{NO}, Z_{NOX}, and Z_{NO2}.

2.4.8 *Preparation of NO and NO_X calibration curves.*

2.4.8.1 *Adjustment of NO span control.* Adjust the NO flow from the standard NO cylinder to generate an NO concentration of approximately 80% of the upper range limit (URL) of the NO range. The exact NO concentration is calculated from:

$$[NO]_{OUT} = \frac{F_{NO} \times [NO]_{STD}}{F_{NO} + F_D} \quad (16)$$

where:

$[NO]_{OUT}$ = diluted NO concentration at the output manifold, ppm

F_{NO} = NO flowrate, scm^3/min

$[NO]_{STD}$=concentration of the undiluted NO standard, ppm

F_D = diluent air flowrate, scm^3/min

Sample this NO concentration until the NO and NO_X responses have stabilized. Adjust the NO span control to obtain a recorder response as indicated below:

recorder response (% scale) =

$$= \left(\frac{[NO]_{OUT}}{URL} \times 100 \right) + Z_{NO} \quad (17)$$

$$= \left(\frac{[NO_X]_{OUT}}{URL} \times 100 \right) + Z_{NO_X} \quad (19)$$

where:

URL = nominal upper range limit of the NO channel, ppm

NOTE: Some analyzers may have separate span controls for NO, NO_X, and NO_2. Other analyzers may have separate span controls only for NO and NO_X, while still others may have only one span control common to all three channels. When only one span control is available, the span adjustment is made on the NO channel of the analyzer.

If substantial adjustment of the NO span control is necessary, it may be necessary to recheck the zero and span adjustments by repeating steps 2.4.7 and 2.4.8.1. Record the NO concentration and the analyzer's NO response.

2.4.8.2 *Adjustment of NO_X span control.* When adjusting the analyzer's NO_X span control, the presence of any NO_2 impurity in the standard NO cylinder must be taken into account. Procedures for determining the amount of NO_2 impurity in the standard NO cylinder are given in reference 13. The exact NO_X concentration is calculated from:

$$[NO_X]_{OUT} = \frac{F_{NO} \times \left([NO]_{STD} + [NO_2]_{IMP}\right)}{F_{NO} + F_D} \quad (18)$$

where:

$[NO_X]_{OUT}$ = diluted NO_X cencentration at the output manifold, ppm

$[NO_2]_{IMP}$ = concentration of NO_2 impurity in the standard NO cylinder, ppm

Adjust the NO_X span control to obtain a convenient recorder response as indicated below:

recorder response (% scale)

$$= \left(\frac{[NO_X]_{OUT}}{URL} \times 100 \right) + Z_{NO_X} \quad (19)$$

NOTE: If the analyzer has only one span control, the span adjustment is made on the NO channel and no further adjustment is made here for NO_X.

If substantial adjustment of the NO_X span control is necessary, it may be necessary to recheck the zero and span adjustments by repeating steps 2.4.7 and 2.4.8.2. Record the NO_X concentration and the analyzer's NO_X response.

2.4.8.3 Generate several additional concentrations (at least five evenly spaced points across the remaining scale are suggested to verify linearity) by decreasing F_{NO} or increasing F_D. For each concentration generated, calculate the exact NO and NO_X concentrations using equations (16) and (18) respectively. Record the analyzer's NO and NO_X responses for each concentration. Plot the analyzer responses versus the respective calculated NO and NO_X concentrations and draw or calculate the NO and NO_X calibration curves. For subsequent calibrations where linearity can be assumed, these curves may be checked with a two-point calibration consisting of a zero point and NO and NO_X concentrations of approximately 80 percent of the URL.

2.4.9 *Preparation of NO_2 calibration curve.*

2.4.9.1 Remove the NO flow. Assuming the NO_2 zero has been properly adjusted while sampling zero air in step 2.4.7, switch the valve to provide NO_2 at the output manifold.

2.4.9.2 Adjust F_D to generate an NO_2 concentration of approximately 80 percent of the *URL* of the NO_2 range. The total air flow must exceed the demand of the analyzer(s) under calibration. The actual concentration of NO_2 is calculated from:

$$[NO_2]_{OUT} = \frac{R \times K}{F_P + F_D} \quad (20)$$

where:

$[NO_2]_{OUT}$ = diluted NO_2 concentration at the output manifold, ppm

R = permeation rate, μg/min

K = 0.532µl NO_2/µg NO_2 (at 25 °C and 760 mm Hg)

F_p = air flowrate across permeation device, scm^3/min

F_D = diluent air flowrate, scm^3/min

Sample this NO_2 concentration until the NO_X and NO_2 responses have stabilized. Adjust the NO_2 span control to obtain a recorder response as indicated below:

recorder response (% scale)

$$= \left(\frac{[NO_2]_{OUT}}{URL} \times 100 \right) + Z_{NO2} \qquad (21)$$

NOTE: If the analyzer has only one or two span controls, the span adjustments are made on the NO channel or NO and NO_X channels and no further adjustment is made here for NO_2.

If substantial adjustment of the NO_2 span control is necessary it may be necessary to recheck the zero and span adjustments by repeating steps 2.4.7 and 2.4.9.2. Record the NO_2 concentration and the analyzer's NO_2 response. Using the NO_X calibration curve obtained in step 2.4.8, measure and record the NO_X concentration as $[NO_X]_M$.

2.4.9.3 Adjust F_D to obtain several other concentrations of NO_2 over the NO_2 range (at least five evenly spaced points across the remaining scale are suggested). Calculate each NO_2 concentration using equation (20) and record the corresponding analyzer NO_2 and NO_X responses. Plot the analyzer's NO_2 responses versus the corresponding calculated NO_2 concentrations and draw or calculate the NO_2 calibration curve.

2.4.10 *Determination of converter efficiency*.

2.4.10.1 Plot $[NO_X]_M$ (y-axis) versus $[NO_2]_{OUT}$ (x-axis) and draw or calculate the converter efficiency curve. The slope of the curve times 100 is the average converter efficiency, E_C. The average converter efficiency must be greater than 96 percent; if it is less than 96 percent, replace or service the converter.

NOTE: Supplemental information on calibration and other procedures in this method are given in reference 13.

3. *Frequency of calibration*. The frequency of calibration, as well as the number of points necessary to establish the calibration curve and the frequency of other performance checks, will vary from one analyzer to another. The user's quality control program should provide guidelines for initial establishment of these variables and for subsequent alteration as operational experience is accumulated. Manufacturers of analyzers should include in their instruction/operation manuals information and guidance as to these variables and on other matters of operation, calibration, and quality control.

REFERENCES

1. A. Fontijn, A. J. Sabadell, and R. J. Ronco, ''Homogeneous Chemiluminescent Measurement of Nitric Oxide with Ozone,'' Anal. Chem., 42, 575 (1970).

2. D. H. Stedman, E. E. Daby, F. Stuhl, and H. Niki, ''Analysis of Ozone and Nitric Oxide by a Chemiluminiscent Method in Laboratory and Atmospheric Studies of Photochemical Smog,'' J. Air Poll. Control Assoc., 22, 260 (1972).

3. B. E. Martin, J. A. Hodgeson, and R. K. Stevens, ''Detection of Nitric Oxide Chemiluminescence at Atmospheric Pressure,'' Presented at 164th National ACS Meeting, New York City, August 1972.

4. J. A. Hodgeson, K. A. Rehme, B. E. Martin, and R. K. Stevens, ''Measurements for Atmospheric Oxides of Nitrogen and Ammonia by Chemiluminescence,'' Presented at 1972 APCA Meeting, Miami, FL, June 1972.

5. R. K. Stevens and J. A. Hodgeson, ''Applications of Chemiluminescence Reactions to the Measurement of Air Pollutants,'' Anal. Chem., 45, 443A (1973).

6. L. P. Breitenbach and M. Shelef, ''Development of a Method for the Analysis of NO_2 and NH_3 by NO-Measuring Instruments,'' J. Air Poll. Control Assoc., 23, 128 (1973).

7. A. M. Winer, J. W. Peters, J. P. Smith, and J. N. Pitts, Jr., ''Response of Commercial Chemiluminescent NO-NO_2 Analyzers to Other Nitrogen-Containing Compounds,'' Environ. Sci. Technol., 8, 1118 (1974).

8. K. A. Rehme, B. E. Martin, and J. A. Hodgeson, Tentative Method for the Calibration of Nitric Oxide, Nitrogen Dioxide, and Ozone Analyzers by Gas Phase Titration,'' EPA–R2–73–246, March 1974.

9. J. A. Hodgeson, R. K. Stevens, and B. E. Martin, ''A Stable Ozone Source Applicable as a Secondary Standard for Calibration of Atmospheric Monitors,'' ISA Transactions, 11, 161 (1972).

10. A. E. O'Keeffe and G. C. Ortman, ''Primary Standards for Trace Gas Analysis,'' Anal. Chem., 38, 760 (1966).

11. F. P. Scaringelli, A. E. O'Keeffe, E. Rosenberg, and J. P. Bell, ''Preparation of Known Concentrations of Gases and Vapors with Permeation Devices Calibrated Gravimetrically,'' Anal. Chem., 42, 871 (1970).

12. H. L. Rook, E. E. Hughes, R. S. Fuerst, and J. H. Margeson, ''Operation Characteristics of NO_2 Permeation Devices,'' Presented at 167th National ACS Meeting, Los Angeles, CA, April 1974.

13. E. C. Ellis, ''Technical Assistance Document for the Chemiluminescence Measurement of Nitrogen Dioxide,'' EPA–E600/4–75–003 (Available in draft form from the United States Environmental Protection Agency, Department E (MD–76), Environmental Monitoring and Support Laboratory, Research Triangle Park, NC 27711).

14. A Procedure for Establishing Traceability of Gas Mixtures to Certain National Bureau of Standards Standard Reference Materials. EPA–600/7–81–010, Joint publication by NBS and EPA. Available from the U.S. Environmental Protection Agency, Environmental Monitoring Systems Laboratory (MD–77), Research Triangle Park, NC 27711, May 1981.

15. *Quality Assurance Handbook for Air Pollution Measurement Systems, Volume II, Ambient Air Specific Methods.* The U.S. Environmental Protection Agency, Environmental Monitoring Systems Laboratory, Research Triangle Park, NC 27711. Publication No. EAP–600/4–77–027a.

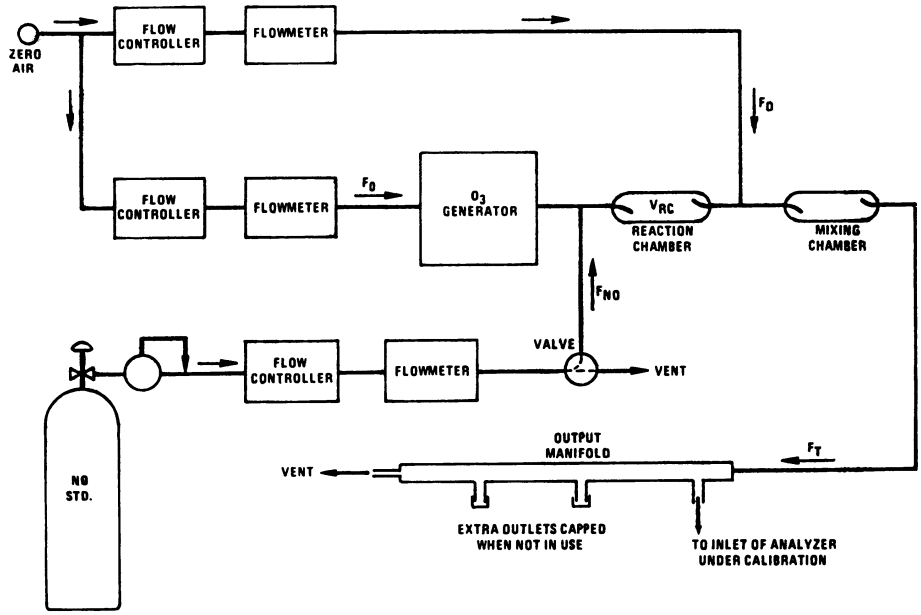

Figure 1. Schematic diagram of a typical GPT calibration system.

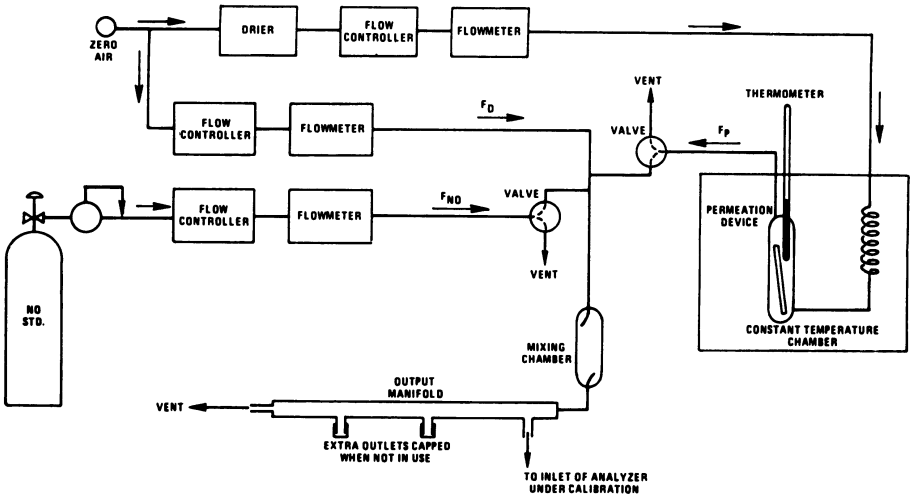

Figure 2. Schematic diagram of a typical calibration apparatus using an NO_2 permeation device.

[41 FR 52688, Dec. 1, 1976, as amended at 48 FR 2529, Jan 20, 1983]

APPENDIX G TO PART 50—REFERENCE METHOD FOR THE DETERMINATION OF LEAD IN SUSPENDED PARTICULATE MATTER COLLECTED FROM AMBIENT AIR

1. *Principle and applicability.*

1.1 Ambient air suspended particulate matter is collected on a glass-fiber filter for 24 hours using a high volume air sampler. The analysis of the 24-hour samples may be performed for either individual samples or composites of the samples collected over a calendar month or quarter, provided that the compositing procedure has been approved in accordance with section 2.8 of appendix C to part 58 of this chapter—*Modifications of methods by users.* (Guidance or assistance in requesting approval under Section 2.8 can be obtained from the address given in section 2.7 of appendix C to part 58 of this chapter.)

1.2 Lead in the particulate matter is solubilized by extraction with nitric acid (HNO_3), facilitated by heat or by a mixture of HNO_3 and hydrochloric acid (HCl) facilitated by ultrasonication.

1.3 The lead content of the sample is analyzed by atomic absorption spectrometry using an air-acetylene flame, the 283.3 or 217.0 nm lead absorption line, and the optimum instrumental conditions recommended by the manufacturer.

1.4 The ultrasonication extraction with HNO_3/HCl will extract metals other than lead from ambient particulate matter.

2. *Range, sensitivity, and lower detectable limit.* The values given below are typical of the methods capabilities. Absolute values will vary for individual situations depending on the type of instrument used, the lead line, and operating conditions.

2.1 *Range.* The typical range of the method is 0.07 to 7.5 µg Pb/m^3 assuming an upper linear range of analysis of 15 µg/ml and an air volume of 2,400 m^3.

2.2 *Sensitivity.* Typical sensitivities for a 1 percent change in absorption (0.0044 absorbance units) are 0.2 and 0.5 µg Pb/ml for the 217.0 and 283.3 nm lines, respectively.

2.3 *Lower detectable limit (LDL).* A typical LDL is 0.07 µg Pb/m^3. The above value was calculated by doubling the between-laboratory standard deviation obtained for the lowest measurable lead concentration in a collaborative test of the method.(*15*) An air volume of 2,400 m^3 was assumed.

3. *Interferences.* Two types of interferences are possible: chemical and light scattering.

3.1 *Chemical.* Reports on the absence *(1, 2, 3, 4, 5)* of chemical interferences far outweigh those reporting their presence, *(6)* therefore, no correction for chemical interferences is given here. If the analyst suspects that the sample matrix is causing a chemical interference, the interference can be verified and corrected for by carrying out the analysis

with and without the method of standard additions.*(7)*

3.2 *Light scattering.* Nonatomic absorption or light scattering, produced by high concentrations of dissolved solids in the sample, can produce a significant interference, especially at low lead concentrations. (*2*) The interference is greater at the 217.0 nm line than at the 283.3 nm line. No interference was observed using the 283.3 nm line with a similar method.(*1*)

Light scattering interferences can, however, be corrected for instrumentally. Since the dissolved solids can vary depending on the origin of the sample, the correction may be necessary, especially when using the 217.0 nm line. Dual beam instruments with a continuum source give the most accurate correction. A less accurate correction can be obtained by using a nonabsorbing lead line that is near the lead analytical line. Information on use of these correction techniques can be obtained from instrument manufacturers' manuals.

If instrumental correction is not feasible, the interference can be eliminated by use of the ammonium pyrrolidinecarbodithioate-methylisobutyl ketone, chelation-solvent extraction technique of sample preparation.(*8*)

4. *Precision and bias.*

4.1 The high-volume sampling procedure used to collect ambient air particulate matter has a between-laboratory relative standard deviation of 3.7 percent over the range 80 to 125 µg/m^3.(*9*) The combined extraction-analysis procedure has an average within-laboratory relative standard deviation of 5 to 6 percent over the range 1.5 to 15 µg Pb/ml, and an average between laboratory relative standard deviation of 7 to 9 percent over the same range. These values include use of either extraction procedure.

4.2 Single laboratory experiments and collaborative testing indicate that there is no significant difference in lead recovery between the hot and ultrasonic extraction procedures.(*15*)

5. *Apparatus.*

5.1 *Sampling.*

5.1.1 *High-Volume Sampler.* Use and calibrate the sampler as described in appendix B to this part.

5.2 *Analysis.*

5.2.1 *Atomic absorption spectrophotometer.* Equipped with lead hollow cathode or electrodeless discharge lamp.

5.2.1.1 *Acetylene.* The grade recommended by the instrument manufacturer should be used. Change cylinder when pressure drops below 50–100 psig.

5.2.1.2 *Air.* Filtered to remove particulate, oil, and water.

5.2.2 *Glassware.* Class A borosilicate glassware should be used throughout the analysis.

5.2.2.1 *Beakers.* 30 and 150 ml. graduated, Pyrex.

5.2.2.2 *Volumetric flasks.* 100-ml.

5.2.2.3 *Pipettes.* To deliver 50, 30, 15, 8, 4, 2, 1 ml.

5.2.2.4 *Cleaning.* All glassware should be scrupulously cleaned. The following procedure is suggested. Wash with laboratory detergent, rinse, soak for 4 hours in 20 percent (w/w) HNO_3, rinse 3 times with distilled-deionized water, and dry in a dust free manner.

5.2.3 *Hot plate.*

5.2.4. *Ultrasonication water bath, unheated.* Commercially available laboratory ultrasonic cleaning baths of 450 watts or higher ''cleaning power,'' i.e., actual ultrasonic power output to the bath have been found satisfactory.

5.2.5 *Template.* To aid in sectioning the glass-fiber filter. See figure 1 for dimensions.

5.2.6 *Pizza cutter.* Thin wheel. Thickness 1mm.

5.2.7 *Watch glass.*

5.2.8 *Polyethylene bottles.* For storage of samples. Linear polyethylene gives better storage stability than other polyethylenes and is preferred.

5.2.9 Parafilm ''M''.[1] American Can Co., Marathon Products, Neenah, Wis., or equivalent.

6. *Reagents.*

6.1 *Sampling.*

6.1.1 *Glass fiber filters.* The specifications given below are intended to aid the user in obtaining high quality filters with reproducible properties. These specifications have been met by EPA contractors.

6.1.1.1 *Lead content.* The absolute lead content of filters is not critical, but low values are, of course, desirable. EPA typically obtains filters with a lead content of 75 µg/filter.

It is important that the variation in lead content from filter to filter, within a given batch, be small.

6.1.1.2 *Testing.*

6.1.1.2.1 For large batches of filters (>500 filters) select at random 20 to 30 filters from a given batch. For small batches (>500 filters) a lesser number of filters may be taken. Cut one ¾″×8″ strip from each filter anywhere in the filter. Analyze all strips, separately, according to the directions in sections 7 and 8.

6.1.1.2.2 Calculate the total lead in each filter as

$$F_b = \mu g\ Pb/ml \times \frac{100\ ml}{strip} \times \frac{12\ strips}{filter}$$

where:

F_b = Amount of lead per 72 square inches of filter, µg.

6.1.1.2.3 Calculate the mean, F_b, of the values and the relative standard deviation

[1] Mention of commercial products does not imply endorsement by the U.S. Environmental Protection Agency.

(standard deviation/mean × 100). If the relative standard deviation is high enough so that, in the analysts opinion, subtraction of F_b, (section 10.3) may result in a significant error in the µg Pb/m^3, the batch should be rejected.

6.1.1.2.4 For acceptable batches, use the value of F_b to correct all lead analyses (section 10.3) of particulate matter collected using that batch of filters. If the analyses are below the LDL (section 2.3) no correction is necessary.

6.2 *Analysis.*

6.2.1 Concentrated (15.6 *M)* HNO_3. ACS reagent grade HNO_3 and commercially available redistilled HNO_3 has found to have sufficiently low lead concentrations.

6.2.2 Concentrated (11.7 *M*) HCl. ACS reagent grade.

6.2.3 *Distilled-deionized water.* (D.I. water).

6.2.4 3 *M* HNO_3. This solution is used in the hot extraction procedure. To prepare, add 192 ml of concentrated HNO_3 to D.I. water in a 1 *l* volumetric flask. Shake well, cool, and dilute to volume with D.I. water. *Caution:* Nitric acid fumes are toxic. Prepare in a well ventilated fume hood.

6.2.5 0.45 *M* HNO_3. This solution is used as the matrix for calibration standards when using the hot extraction procedure. To prepare, add 29 ml of concentrated HNO_3 to D.I. water in a 1 *l* volumetric flask. Shake well, cool, and dilute to volume with D.I. water.

6.2.6 2.6 *M* HNO_3+0 to 0.9 *M* HCl. This solution is used in the ultrasonic extraction procedure. The concentration of HCl can be varied from 0 to 0.9 *M*. Directions are given for preparation of a 2.6 *M* HNO_3+0.9 *M* HCl solution. Place 167 ml of concentrated HNO_3 into a 1 *l* volumetric flask and add 77 ml of concentrated HCl. Stir 4 to 6 hours, dilute to nearly 1 *l* with D.I. water, cool to room temperature, and dilute to 1 *l*.

6.2.7 0.40 *M* HNO_3 + X *M* HCl. This solution is used as the matrix for calibration standards when using the ultrasonic extraction procedure. To prepare, add 26 ml of concentrated HNO_3, plus the ml of HCl required, to a 1 *l* volumetric flask. Dilute to nearly 1 *l* with D.I. water, cool to room temperature, and dilute to 1 *l*. The amount of HCl required can be determined from the following equation:

$$y = \frac{77\ \text{ml} \times 0.15 \times}{0.9\ \text{M}}$$

where:

y = ml of concentrated HCl required.
x = molarity of HCl in 6.2.6.
0.15 = dilution factor in 7.2.2.

6.2.8 Lead nitrate, $Pb(NO_3)_2$. ACS reagent grade, purity 99.0 percent. Heat for 4 hours at 120 °C and cool in a desiccator.

6.3 *Calibration standards.*

6.3.1 Master standard, 1000 µg Pb/ml in HNO_3. Dissolve 1.598 g of $Pb(NO_3)_2$ in 0.45 *M* HNO_3 contained in a 1 *l* volumetric flask and dilute to volume with 0.45 *M* HNO_3.

6.3.2 Master standard, 1000 µg Pb/ml in HNO_3/HCl. Prepare as in section 6.3.1 except use the HNO_3/HCl solution in section 6.2.7.

Store standards in a polyethylene bottle. Commercially available certified lead standard solutions may also be used.

7. *Procedure.*

7.1 *Sampling.* Collect samples for 24 hours using the procedure described in reference *10* with glass-fiber filters meeting the specifications in section 6.1.1. Transport collected samples to the laboratory taking care to minimize contamination and loss of sample. (*16).*

7.2 *Sample preparation.*

7.2.1 *Hot extraction procedure.*

7.2.1.1 Cut a ¾″×8″ strip from the exposed filter using a template and a pizza cutter as described in Figures 1 and 2. Other cutting procedures may be used.

Lead in ambient particulate matter collected on glass fiber filters has been shown to be uniformly distributed across the filter.[1,3,11] Another study[12] has shown that when sampling near a roadway, strip position contributes significantly to the overall variability associated with lead analyses. Therefore, when sampling near a roadway, additional strips should be analyzed to minimize this variability.

7.2.1.2 Fold the strip in half twice and place in a 150-ml beaker. Add 15 ml of 3 *M* HNO_3 to cover the sample. The acid should completely cover the sample. Cover the beaker with a watch glass.

7.2.1.3 Place beaker on the hot-plate, contained in a fume hood, and boil gently for 30 min. Do not let the sample evaporate to dryness. *Caution:* Nitric acid fumes are toxic.

7.2.1.4 Remove beaker from hot plate and cool to near room temperature.

7.2.1.5 Quantitatively transfer the sample as follows:

7.2.1.5.1 Rinse watch glass and sides of beaker with D.I. water.

7.2.1.5.2 Decant extract and rinsings into a 100-ml volumetric flask.

7.2.1.5.3 Add D.I. water to 40 ml mark on beaker, cover with watch glass, and set aside for a minimum of 30 minutes. This is a critical step and cannot be omitted since it allows the HNO_3 trapped in the filter to diffuse into the rinse water.

7.2.1.5.4 Decant the water from the filter into the volumetric flask.

7.2.1.5.5 Rinse filter and beaker twice with D.I. water and add rinsings to volumetric flask until total volume is 80 to 85 ml.

7.2.1.5.6 Stopper flask and shake vigorously. Set aside for approximately 5 minutes or until foam has dissipated.

7.2.1.5.7 Bring solution to volume with D.I. water. Mix thoroughly.

7.2.1.5.8 Allow solution to settle for one hour before proceeding with analysis.

7.2.1.5.9 If sample is to be stored for subsequent analysis, transfer to a linear polyethylene bottle.

7.2.2 *Ultrasonic extraction procedure.*

7.2.2.1 Cut a ¾″×8″ strip from the exposed filter as described in section 7.2.1.1.

7.2.2.2 Fold the strip in half twice and place in a 30 ml beaker. Add 15 ml of the HNO_3/HCl solution in section 6.2.6. The acid should completely cover the sample. Cover the beaker with parafilm.

The parafilm should be placed over the beaker such that none of the parafilm is in contact with water in the ultrasonic bath. Otherwise, rinsing of the parafilm (section 7.2.2.4.1) may contaminate the sample.

7.2.2.3 Place the beaker in the ultrasonication bath and operate for 30 minutes.

7.2.2.4 Quantitatively transfer the sample as follows:

7.2.2.4.1 Rinse parafilm and sides of beaker with D.I. water.

7.2.2.4.2 Decant extract and rinsings into a 100 ml volumetric flask.

7.2.2.4.3 Add 20 ml D.I. water to cover the filter strip, cover with parafilm, and set aside for a minimum of 30 minutes. This is a critical step and cannot be omitted. The sample is then processed as in sections 7.2.1.5.4 through 7.2.1.5.9.

NOTE: Samples prepared by the hot extraction procedure are now in 0.45 *M* HNO_3. Samples prepared by the ultrasonication procedure are in 0.40 *M* HNO_3 + X *M* HCl.

8. *Analysis.*

8.1 Set the wavelength of the monochromator at 283.3 or 217.0 nm. Set or align other instrumental operating conditions as recommended by the manufacturer.

8.2 The sample can be analyzed directly from the volumetric flask, or an appropriate amount of sample decanted into a sample analysis tube. In either case, care should be taken not to disturb the settled solids.

8.3 Aspirate samples, calibration standards and blanks (section 9.2) into the flame and record the equilibrium absorbance.

8.4 Determine the lead concentration in µg Pb/ml, from the calibration curve, section 9.3.

8.5 Samples that exceed the linear calibration range should be diluted with acid of the same concentration as the calibration standards and reanalyzed.

9. *Calibration.*

9.1 *Working standard,* 20 µg Pb/ml. Prepared by diluting 2.0 ml of the master standard (section 6.3.1 if the hot acid extraction was used or section 6.3.2 if the ultrasonic extraction procedure was used) to 100 ml with acid of the same concentration as used in preparing the master standard.

9.2 *Calibration standards.* Prepare daily by diluting the working standard, with the same acid matrix, as indicated below. Other lead concentrations may be used.

Volume of 20 µg/ml working standard, ml	Final volume, ml	Concentration µg Pb/ml
0	100	0
1.0	200	0.1
2.0	200	0.2
2.0	100	0.4
4.0	100	0.8
8.0	100	1.6
15.0	100	3.0
30.0	100	6.0
50.0	100	10.0
100.0	100	20.0

9.3 *Preparation of calibration curve.* Since the working range of analysis will vary depending on which lead line is used and the type of instrument, no one set of instructions for preparation of a calibration curve can be given. Select standards (plus the reagent blank), in the same acid concentration as the samples, to cover the linear absorption range indicated by the instrument manufacturer. Measure the absorbance of the blank and standards as in section 8.0. Repeat until good agreement is obtained between replicates. Plot absorbance (y-axis) versus concentration in µg Pb/ml (x-axis). Draw (or compute) a straight line through the linear portion of the curve. Do not force the calibration curve through zero. Other calibration procedures may be used.

To determine stability of the calibration curve, remeasure—alternately—one of the following calibration standards for every 10th sample analyzed: Concentration $\leq$ 1µg Pb/ml; concentration $\leq$ 10 µg Pb/ml. If either standard deviates by more than 5 percent from the value predicted by the calibration curve, recalibrate and repeat the previous 10 analyses.

10. *Calculation.*

10.1 *Measured air volume.* Calculate the measured air volume at Standard Temperature and Pressure as described in Reference 10.

10.2 *Lead concentration.* Calculate lead concentration in the air sample.

$$C = \frac{(\mu g\ Pb/ml \times 100\ ml/strip \times 12\ strips/filter) - \overline{F}_b}{V_{STP}}$$

where:

C = Concentration, µg Pb/sm³.

µg Pb/ml = Lead concentration determined from section 8.

100 ml/strip = Total sample volume.

12 strips = Total useable filter area, 8″×9″. Exposed area of one strip, ¾″×7″.

Filter = Total area of one strip, ¾″×8″.

F_b = Lead concentration of blank filter, µg, from section 6.1.1.2.3.

V_{STP} = Air volume from section 10.2.

11. *Quality control.*

¾″×8″ glass fiber filter strips containing 80 to 2000 µg Pb/strip (as lead salts) and blank strips with zero Pb content should be used to determine if the method—as being used—has any bias. Quality control charts should be established to monitor differences between measured and true values. The frequency of such checks will depend on the local quality control program.

To minimize the possibility of generating unreliable data, the user should follow practices established for assuring the quality of air pollution data, (*13*) and take part in EPA's semiannual audit program for lead analyses.

12. *Trouble shooting.*

1. During extraction of lead by the hot extraction procedure, it is important to keep the sample covered so that corrosion products—formed on fume hood surfaces which may contain lead—are not deposited in the extract.

2. The sample acid concentration should minimize corrosion of the nebulizer. However, different nebulizers may require lower acid concentrations. Lower concentrations can be used provided samples and standards have the same acid concentration.

3. Ashing of particulate samples has been found, by EPA and contractor laboratories, to be unnecessary in lead analyses by atomic absorption. Therefore, this step was omitted from the method.

4. Filtration of extracted samples, to remove particulate matter, was specifically excluded from sample preparation, because some analysts have observed losses of lead due to filtration.

5. If suspended solids should clog the nebulizer during analysis of samples, centrifuge the sample to remove the solids.

13. *Authority.*

(Secs. 109 and 301(a), Clean Air Act, as amended (42 U.S.C. 7409, 7601(a)))

14. *References.*

1. Scott, D. R. et al. ''Atomic Absorption and Optical Emission Analysis of NASN Atmospheric Particulate Samples for Lead.'' *Envir. Sci. and Tech., 10,* 877–880 (1976).

2. Skogerboe, R. K. et al. ''Monitoring for Lead in the Environment.'' pp. 57–66, Department of Chemistry, Colorado State University, Fort Collins, CO 80523. Submitted to National Science Foundation for publications, 1976.

3. Zdrojewski, A. et al. ''The Accurate Measurement of Lead in Airborne Particulates.'' *Inter. J. Environ. Anal. Chem., 2,* 63–77 (1972).

4. Slavin, W., ''Atomic Absorption Spectroscopy.'' Published by Interscience Company, New York, NY (1968).

5. Kirkbright, G. F., and Sargent, M., ''Atomic Absorption and Fluorescence Spectroscopy.'' Published by Academic Press, New York, NY 1974.

6. Burnham, C. D. et al., ''Determination of Lead in Airborne Particulates in Chicago and Cook County, IL, by Atomic Absorption Spectroscopy.'' Envir. Sci. and Tech., 3, 472–475 (1969).

7. ''Proposed Recommended Practices for Atomic Absorption Spectrometry.'' *ASTM Book of Standards,* part 30, pp. 1596–1608 (July 1973).

8. Koirttyohann, S. R. and Wen, J. W., ''Critical Study of the APCD–MIBK Extraction System for Atomic Absorption.'' *Anal. Chem., 45,* 1986–1989 (1973).

9. *Collaborative Study of Reference Method for the Determination of Suspended Particulates in the Atmosphere (High Volume Method).* Obtainable from National Technical Information Service, Department of Commerce, Port Royal Road, Springfield, VA 22151, as PB–205–891.

10. [Reserved]

11. Dubois, L., et al., ''The Metal Content of Urban Air.'' JAPCA, *16,* 77–78 (1966).

12. EPA Report No. 600/4–77–034, June 1977, ''Los Angeles Catalyst Study Symposium.'' Page 223.

13. *Quality Assurance Handbook for Air Pollution Measurement System. Volume 1—Principles.* EPA–600/9–76–005, March 1976.

14. Thompson, R. J. et al., ''Analysis of Selected Elements in Atmospheric Particulate Matter by Atomic Absorption.'' *Atomic Absorption Newsletter, 9,* No. 3, May-June 1970.

15. To be published. EPA, QAB, EMSL, RTP, N.C. 27711

16. *Quality Assurance Handbook for Air Pollution Measurement Systems. Volume II—Ambient Air Specific Methods.* EPA–600/4–77/027a, May 1977.

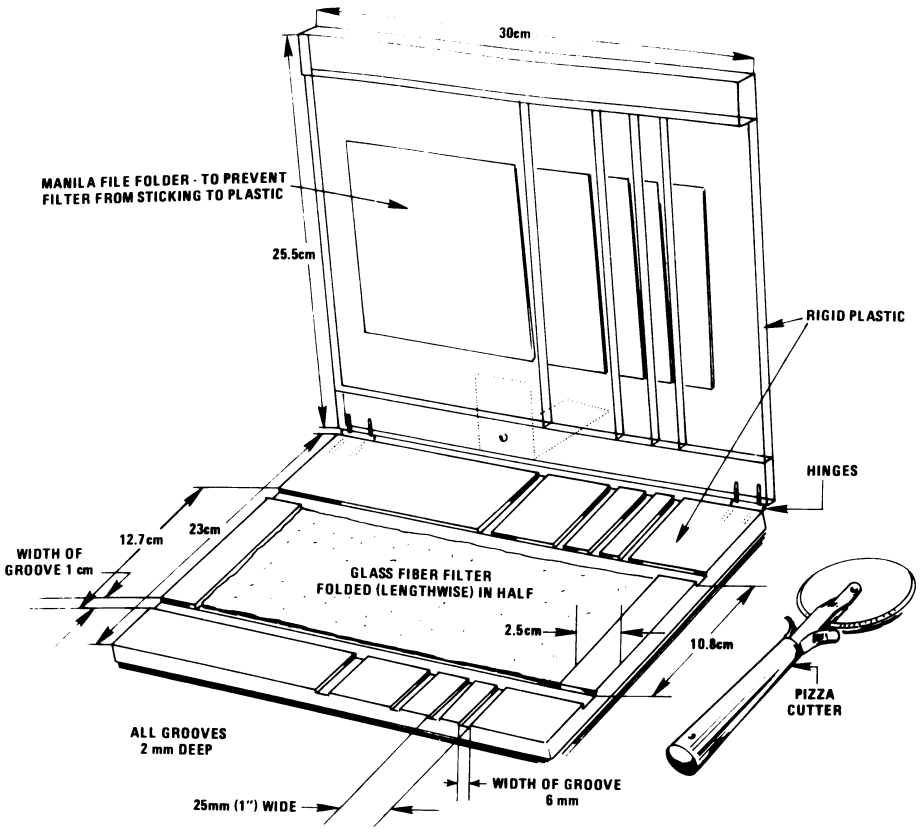

Figure 1

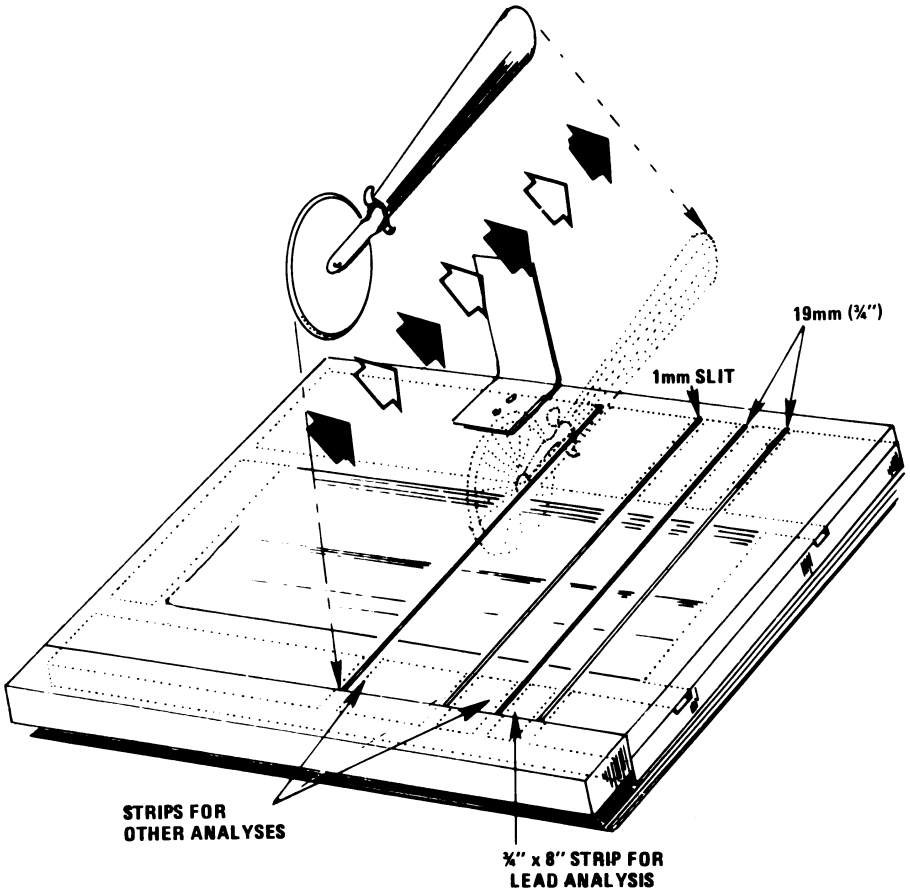

Figure 2

(Secs. 109, 301(a) of the Clean Air Act, as amended (42 U.S.C. 7409, 7601(a)); secs. 110, 301(a) and 319 of the Clean Air Act (42 U.S.C. 7410, 7601(a), 7619))

[43 FR 46258, Oct. 5, 1978; 44 FR 37915, June 29, 1979, as amended at 46 FR 44163, Sept. 3, 1981; 52 FR 24664, July 1, 1987]

APPENDIX H TO PART 50—INTERPRETATION OF THE 1-HOUR PRIMARY AND SECONDARY NATIONAL AMBIENT AIR QUALITY STANDARDS FOR OZONE

1. GENERAL

This appendix explains how to determine when the expected number of days per calendar year with maximum hourly average concentrations above 0.12 ppm (235 μg/m³) is equal to or less than 1. An expanded discussion of these procedures and associated examples are contained in the ''Guideline for Interpretation of Ozone Air Quality Standards.'' For purposes of clarity in the following discussion, it is convenient to use the term ''exceedance'' to describe a daily maximum hourly average ozone measurement that is greater than the level of the standard. Therefore, the phrase ''expected number of days with maximum hourly average ozone concentrations above the level of the standard'' may be simply stated as the ''expected number of exceedances.''

The basic principle in making this determination is relatively straightforward. Most of the complications that arise in determining the expected number of annual exceedances relate to accounting for incomplete sampling. In general, the average number of exceedances per calendar year must be less than or equal to 1. In its simplest form, the number of exceedances at a monitoring site would be recorded for each calendar year and then averaged over the past 3 calendar years to determine if this average is less than or equal to 1.

2. Interpretation of Expected Exceedances

The ozone standard states that the expected number of exceedances per year must be less than or equal to 1. The statistical term ''expected number'' is basically an arithmetic average. The following example explains what it would mean for an area to be in compliance with this type of standard. Suppose a monitoring station records a valid daily maximum hourly average ozone value for every day of the year during the past 3 years. At the end of each year, the number of days with maximum hourly concentrations above 0.12 ppm is determined and this number is averaged with the results of previous years. As long as this average remains ''less than or equal to 1,'' the area is in compliance.

3. Estimating the Number of Exceedances for a Year

In general, a valid daily maximum hourly average value may not be available for each day of the year, and it will be necessary to account for these missing values when estimating the number of exceedances for a particular calendar year. The purpose of these computations is to determine if the expected number of exceedances per year is less than or equal to 1. Thus, if a site has two or more observed exceedances each year, the standard is not met and it is not necessary to use the procedures of this section to account for incomplete sampling.

The term ''missing value'' is used here in the general sense to describe all days that do not have an associated ozone measurement. In some cases, a measurement might actually have been missed but in other cases no measurement may have been scheduled for that day. A daily maximum ozone value is defined to be the highest hourly ozone value recorded for the day. This daily maximum value is considered to be valid if 75 percent of the hours from 9:01 a.m. to 9:00 p.m. (LST) were measured or if the highest hour is greater than the level of the standard.

In some areas, the seasonal pattern of ozone is so pronounced that entire months need not be sampled because it is extremely unlikely that the standard would be exceeded. Any such waiver of the ozone monitoring requirement would be handled under provisions of 40 CFR, part 58. Some allowance should also be made for days for which valid daily maximum hourly values were not obtained but which would quite likely have been below the standard. Such an allowance introduces a complication in that it becomes necessary to define under what conditions a missing value may be assumed to have been less than the level of the standard. The following criterion may be used for ozone:

A missing daily maximum ozone value may be assumed to be less than the level of the standard if the valid daily maxima on both the preceding day and the following day do not exceed 75 percent of the level of the standard.

Let z denote the number of missing daily maximum values that may be assumed to be less than the standard. Then the following formula shall be used to estimate the expected number of exceedances for the year:

$$e = v + [(v/n) * (N\text{-}n\text{-}z)] \qquad (1)$$

(*Indicates multiplication.)

where:

e = the estimated number of exceedances for the year,
N = the number of required monitoring days in the year,
n = the number of valid daily maxima,
v = the number of daily values above the level of the standard, and
z = the number of days assumed to be less than the standard level.

This estimated number of exceedances shall be rounded to one decimal place (fractional parts equal to 0.05 round up).

It should be noted that N will be the total number of days in the year unless the appropriate Regional Administrator has granted a waiver under the provisions of 40 CFR part 58.

The above equation may be interpreted intuitively in the following manner. The estimated number of exceedances is equal to the observed number of exceedances (v) plus an increment that accounts for incomplete sampling. There were (N-n) missing values for the year but a certain number of these, namely z, were assumed to be less than the standard. Therefore, (N-n-z) missing values are considered to include possible exceedances. The fraction of measured values that are above the level of the standard is v/n. It is assumed that this same fraction applies to the (N-n-z) missing values and that (v/n)*(N-n-z) of these values would also have exceeded the level of the standard.

[44 FR 8220, Feb. 8, 1979, as amended at 62 FR 38895, July 18, 1997]

APPENDIX I TO PART 50—INTERPRETATION OF THE 8-HOUR PRIMARY AND SECONDARY NATIONAL AMBIENT AIR QUALITY STANDARDS FOR OZONE

1. *General.*

This appendix explains the data handling conventions and computations necessary for determining whether the national 8-hour primary and secondary ambient air quality standards for ozone specified in §50.10 are met at an ambient ozone air quality monitoring site. Ozone is measured in the ambient air by a reference method based on appendix D of this part. Data reporting, data handling, and computation procedures to be used in making comparisons between reported ozone concentrations and the level of the ozone standard are specified in the following sections. Whether to exclude, retain, or make adjustments to the data affected by stratospheric ozone intrusion or other natural events is subject to the approval of the appropriate Regional Administrator.

2. *Primary and Secondary Ambient Air Quality Standards for Ozone.*

2.1 *Data Reporting and Handling Conventions.*

2.1.1 *Computing 8-hour averages.* Hourly average concentrations shall be reported in parts per million (ppm) to the third decimal place, with additional digits to the right being truncated. Running 8-hour averages shall be computed from the hourly ozone concentration data for each hour of the year and the result shall be stored in the first, or start, hour of the 8-hour period. An 8-hour average shall be considered valid if at least 75% of the hourly averages for the 8-hour period are available. In the event that only 6 (or 7) hourly averages are available, the 8-hour average shall be computed on the basis of the hours available using 6 (or 7) as the divisor. (8-hour periods with three or more missing hours shall not be ignored if, after substituting one-half the minimum detectable limit for the missing hourly concentrations, the 8-hour average concentration is greater than the level of the standard.) The computed 8-hour average ozone concentrations shall be reported to three decimal places (the insignificant digits to the right of the third decimal place are truncated, consistent with the data handling procedures for the reported data.)

2.1.2 *Daily maximum 8-hour average concentrations.* (a) There are 24 possible running 8-hour average ozone concentrations for each calendar day during the ozone monitoring season. (Ozone monitoring seasons vary by geographic location as designated in part 58, appendix D to this chapter.) The daily maximum 8-hour concentration for a given calendar day is the highest of the 24 possible 8-hour average concentrations computed for that day. This process is repeated, yielding a daily maximum 8-hour average ozone concentration for each calendar day with ambient ozone monitoring data. Because the 8-hour averages are recorded in the start hour, the daily maximum 8-hour concentrations from two consecutive days may have some hourly concentrations in common. Generally, overlapping daily maximum 8-hour averages are not likely, except in those nonurban monitoring locations with less pronounced diurnal variation in hourly concentrations.

(b) An ozone monitoring day shall be counted as a valid day if valid 8-hour averages are available for at least 75% of possible hours in the day (i.e., at least 18 of the 24 averages). In the event that less than 75% of the 8-hour averages are available, a day shall also be counted as a valid day if the daily maximum 8-hour average concentration for that day is greater than the level of the ambient standard.

2.2 *Primary and Secondary Standard-related Summary Statistic.* The standard-related summary statistic is the annual fourth-highest daily maximum 8-hour ozone concentration, expressed in parts per million, averaged over three years. The 3-year average shall be computed using the three most recent, consecutive calendar years of monitoring data meeting the data completeness requirements described in this appendix. The computed 3-year average of the annual fourth-highest daily maximum 8-hour average ozone concentrations shall be expressed to three decimal places (the remaining digits to the right are truncated.)

2.3 *Comparisons with the Primary and Secondary Ozone Standards.* (a) The primary and secondary ozone ambient air quality standards are met at an ambient air quality monitoring site when the 3-year average of the annual fourth-highest daily maximum 8-hour average ozone concentration is less than or equal to 0.08 ppm. The number of significant figures in the level of the standard dictates the rounding convention for comparing the computed 3-year average annual fourth-highest daily maximum 8-hour average ozone concentration with the level of the standard. The third decimal place of the computed value is rounded, with values equal to or greater than 5 rounding up. Thus, a computed 3-year average ozone concentration of 0.085 ppm is the smallest value that is greater than 0.08 ppm.

(b) This comparison shall be based on three consecutive, complete calendar years of air quality monitoring data. This requirement is met for the three year period at a monitoring site if daily maximum 8-hour average concentrations are available for at least 90%, on average, of the days during the designated ozone monitoring season, with a minimum data completeness in any one year of at least 75% of the designated sampling days. When

computing whether the minimum data completeness requirements have been met, meteorological or ambient data may be sufficient to demonstrate that meteorological conditions on missing days were not conducive to concentrations above the level of the standard. Missing days assumed less than the level of the standard are counted for the purpose of meeting the data completeness requirement, subject to the approval of the appropriate Regional Administrator.

(c) Years with concentrations greater than the level of the standard shall not be ignored on the ground that they have less than complete data. Thus, in computing the 3-year average fourth maximum concentration, calendar years with less than 75% data completeness shall be included in the computation if the average annual fourth maximum 8-hour concentration is greater than the level of the standard.

(d) Comparisons with the primary and secondary ozone standards are demonstrated by examples 1 and 2 in paragraphs (d)(1) and (d)(2) respectively as follows:

(1) As shown in example 1, the primary and secondary standards are met at this monitoring site because the 3-year average of the annual fourth-highest daily maximum 8-hour average ozone concentrations (i.e., 0.084 ppm) is less than or equal to 0.08 ppm. The data completeness requirement is also met because the average percent of days with valid ambient monitoring data is greater than 90%, and no single year has less than 75% data completeness.

EXAMPLE 1. AMBIENT MONITORING SITE ATTAINING THE PRIMARY AND SECONDARY OZONE STANDARDS

Year	Percent Valid Days	1st Highest Daily Max 8-hour Conc. (ppm)	2nd Highest Daily Max 8-hour Conc. (ppm)	3rd Highest Daily Max 8-hour Conc. (ppm)	4th Highest Daily Max 8-hour Conc. (ppm)	5th Highest Daily Max 8-hour Conc. (ppm)
1993	100%	0.092	0.091	0.090	0.088	0.085
1994	96%	0.090	0.089	0.086	0.084	0.080
1995	98%	0.087	0.085	0.083	0.080	0.075
Average	98%					

(2) As shown in example 2, the primary and secondary standards are not met at this monitoring site because the 3-year average of the fourth-highest daily maximum 8-hour average ozone concentrations (i.e., 0.093 ppm) is greater than 0.08 ppm. Note that the ozone concentration data for 1994 is used in these computations, even though the data capture is less than 75%, because the average fourth-highest daily maximum 8-hour average concentration is greater than 0.08 ppm.

EXAMPLE 2. AMBIENT MONITORING SITE FAILING TO MEET THE PRIMARY AND SECONDARY OZONE STANDARDS

Year	Percent Valid Days	1st Highest Daily Max 8-hour Conc. (ppm)	2nd Highest Daily Max 8-hour Conc. (ppm)	3rd Highest Daily Max 8-hour Conc. (ppm)	4th Highest Daily Max 8-hour Conc. (ppm)	5th Highest Daily Max 8-hour Conc. (ppm)
1993	96%	0.105	0.103	0.103	0.102	0.102
1994	74%	0.090	0.085	0.082	0.080	0.078
1995	98%	0.103	0.101	0.101	0.097	0.095
Average	89%					

3. *Design Values for Primary and Secondary Ambient Air Quality Standards for Ozone.* The air quality design value at a monitoring site is defined as that concentration that when reduced to the level of the standard ensures that the site meets the standard. For a concentration-based standard, the air quality design value is simply the standard-related test statistic. Thus, for the primary and secondary ozone standards, the 3-year average annual fourth-highest daily maximum 8-hour average ozone concentration is also the air quality design value for the site.

[62 FR 38895, July 18, 1997]

APPENDIX J TO PART 50—REFERENCE METHOD FOR THE DETERMINATION OF PARTICULATE MATTER AS PM_{10} IN THE ATMOSPHERE

1.0 *Applicability.*

1.1 This method provides for the measurement of the mass concentration of particulate matter with an aerodynamic diameter less than or equal to a nominal 10 micrometers (PM_{1O}) in ambient air over a 24-hour period for purposes of determining attainment and maintenance of the primary and secondary national ambient air quality standards for particulate matter specified in §50.6 of this chapter. The measurement process is nondestructive, and the PM_{10} sample can be subjected to subsequent physical or chemical analyses. Quality assurance procedures and guidance are provided in part 58, appendices A and B, of this chapter and in References 1 and 2.

2.0 *Principle.*

2.1 An air sampler draws ambient air at a constant flow rate into a specially shaped inlet where the suspended particulate matter is inertially separated into one or more size fractions within the PM_{10} size range. Each size fraction in the PM_{1O} size range is then collected on a separate filter over the specified sampling period. The particle size discrimination characteristics (sampling effectiveness and 50 percent cutpoint) of the sampler inlet are prescribed as performance specifications in part 53 of this chapter.

2.2 Each filter is weighed (after moisture equilibration) before and after use to determine the net weight (mass) gain due to collected PM_{10}. The total volume of air sampled, corrected to EPA reference conditions (25 C, 101.3 kPa), is determined from the measured flow rate and the sampling time. The mass concentration of PM_{10} in the ambient air is computed as the total mass of collected particles in the PM_{10} size range divided by the volume of air sampled, and is expressed in micrograms per standard cubic meter (µg/std m^3). For PM_{10} samples collected at temperatures and pressures significantly different from EPA reference conditions, these corrected concentrations sometimes differ substantially from actual concentrations (in micrograms per actual cubic meter), particularly at high elevations. Although not required, the actual PM_{10} concentration can be calculated from the corrected concentration, using the average ambient temperature and barometric pressure during the sampling period.

2.3 A method based on this principle will be considered a reference method only if (a) the associated sampler meets the requirements specified in this appendix and the requirements in part 53 of this chapter, and (b) the method has been designated as a reference method in accordance with part 53 of this chapter.

3.0 *Range.*

3.1 The lower limit of the mass concentration range is determined by the repeatability of filter tare weights, assuming the nominal air sample volume for the sampler. For samplers having an automatic filter-changing mechanism, there may be no upper limit. For samplers that do not have an automatic filter-changing mechanism, the upper limit is determined by the filter mass loading beyond which the sampler no longer maintains the operating flow rate within specified limits due to increased pressure drop across the loaded filter. This upper limit cannot be specified precisely because it is a complex function of the ambient particle size distribution and type, humidity, filter type, and perhaps other factors. Nevertheless, all samplers should be capable of measuring 24-hour PM_{10} mass concentrations of at least 300 µg/std m^3 while maintaining the operating flow rate within the specified limits.

4.0 *Precision.*

4.1 The precision of PM_{10} samplers must be 5 µg/m^3 for PM_{10} concentrations below 80 µg/m^3 and 7 percent for PM_{10} concentrations above 80 µg/m^3, as required by part 53 of this chapter, which prescribes a test procedure that determines the variation in the PM_{10} concentration measurements of identical samplers under typical sampling conditions. Continual assessment of precision via collocated samplers is required by part 58 of this chapter for PM_{10} samplers used in certain monitoring networks.

5.0 *Accuracy.*

5.1 Because the size of the particles making up ambient particulate matter varies over a wide range and the concentration of particles varies with particle size, it is difficult to define the absolute accuracy of PM_{10} samplers. Part 53 of this chapter provides a specification for the sampling effectiveness of PM_{10} samplers. This specification requires that the expected mass concentration calculated for a candidate PM_{10} sampler, when sampling a specified particle size distribution, be within ±10 percent of that calculated for an ideal sampler whose sampling effectiveness is explicitly specified. Also, the particle size for 50 percent sampling effectivensss is required to be 10±0.5 micrometers. Other specifications related to accuracy apply to flow measurement and calibration, filter media, analytical (weighing) procedures, and artifact. The flow rate accuracy of PM_{10} samplers used in certain monitoring networks is required by part 58 of this chapter to be assessed periodically via flow rate audits.

6.0 *Potential Sources of Error.*

6.1 *Volatile Particles.* Volatile particles collected on filters are often lost during shipment and/or storage of the filters prior to the post-sampling weighing[3]. Although shipment or storage of loaded filters is sometimes unavoidable, filters should be reweighed as soon as practical to minimize these losses.

6.2 *Artifacts.* Positive errors in PM_{10} concentration measurements may result from retention of gaseous species on filters[4,5]. Such errors include the retention of sulfur

dioxide and nitric acid. Retention of sulfur dioxide on filters, followed by oxidation to sulfate, is referred to as artifact sulfate formation, a phenomenon which increases with increasing filter alkalinity[6]. Little or no artifact sulfate formation should occur using filters that meet the alkalinity specification in section 7.2.4. Artifact nitrate formation, resulting primarily from retention of nitric acid, occurs to varying degrees on many filter types, including glass fiber, cellulose ester, and many quartz fiber filters[5,7,8,9,10]. Loss of true atmospheric particulate nitrate during or following sampling may also occur due to dissociation or chemical reaction. This phenomenon has been observed on Teflon® filters[8] and inferred for quartz fiber filters[11,12]. The magnitude of nitrate artifact errors in PM_{10} mass concentration measurements will vary with location and ambient temperature; however, for most sampling locations, these errors are expected to be small.

6.3 *Humidity.* The effects of ambient humidity on the sample are unavoidable. The filter equilibration procedure in section 9.0 is designed to minimize the effects of moisture on the filter medium.

6.4 *Filter Handling.* Careful handling of filters between presampling and postsampling weighings is necessary to avoid errors due to damaged filters or loss of collected particles from the filters. Use of a filter cartridge or cassette may reduce the magnitude of these errors. Filters must also meet the integrity specification in section 7.2.3.

6.5 *Flow Rate Variation.* Variations in the sampler's operating flow rate may alter the particle size discrimination characteristics of the sampler inlet. The magnitude of this error will depend on the sensitivity of the inlet to variations in flow rate and on the particle distribution in the atmosphere during the sampling period. The use of a flow control device (section 7.1.3) is required to minimize this error.

6.6 *Air Volume Determination.* Errors in the air volume determination may result from errors in the flow rate and/or sampling time measurements. The flow control device serves to minimize errors in the flow rate determination, and an elapsed time meter (section 7.1.5) is required to minimize the error in the sampling time measurement.

7.0 *Apparatus.*

7.1 *PM_{10} Sampler.*

7.1.1 The sampler shall be designed to:

a. Draw the air sample into the sampler inlet and through the particle collection filter at a uniform face velocity.

b. Hold and seal the filter in a horizontal position so that sample air is drawn downward through the filter.

c. Allow the filter to be installed and removed conveniently.

d. Protect the filter and sampler from precipitation and prevent insects and other debris from being sampled.

e. Minimize air leaks that would cause error in the measurement of the air volume passing through the filter.

f. Discharge exhaust air at a sufficient distance from the sampler inlet to minimize the sampling of exhaust air.

g. Minimize the collection of dust from the supporting surface.

7.1.2 The sampler shall have a sample air inlet system that, when operated within a specified flow rate range, provides particle size discrimination characteristics meeting all of the applicable performance specifications prescribed in part 53 of this chapter. The sampler inlet shall show no significant wind direction dependence. The latter requirement can generally be satisfied by an inlet shape that is circularly symmetrical about a vertical axis.

7.1.3 The sampler shall have a flow control device capable of maintaining the sampler's operating flow rate within the flow rate limits specified for the sampler inlet over normal variations in line voltage and filter pressure drop.

7.1.4 The sampler shall provide a means to measure the total flow rate during the sampling period. A continuous flow recorder is recommended but not required. The flow measurement device shall be accurate to ±2 percent.

7.1.5 A timing/control device capable of starting and stopping the sampler shall be used to obtain a sample collection period of 24 ±1 hr (1,440 ±60 min). An elapsed time meter, accurate to within ±15 minutes, shall be used to measure sampling time. This meter is optional for samplers with continuous flow recorders if the sampling time measurement obtained by means of the recorder meets the ±15 minute accuracy specification.

7.1.6 The sampler shall have an associated operation or instruction manual as required by part 53 of this chapter which includes detailed instructions on the calibration, operation, and maintenance of the sampler.

7.2 *Filters.*

7.2.1 *Filter Medium.* No commercially available filter medium is ideal in all respects for all samplers. The user's goals in sampling determine the relative importance of various filter characteristics (e.g., cost, ease of handling, physical and chemical characteristics, etc.) and, consequently, determine the choice among acceptable filters. Furthermore, certain types of filters may not be suitable for use with some samplers, particularly under heavy loading conditions (high mass concentrations), because of high or rapid increase in the filter flow resistance that would exceed the capability of the sampler's flow control device. However, samplers equipped with automatic filter-changing

mechanisms may allow use of these types of filters. The specifications given below are minimum requirements to ensure acceptability of the filter medium for measurement of PM_{10} mass concentrations. Other filter evaluation criteria should be considered to meet individual sampling and analysis objectives.

7.2.2 *Collection Efficiency*. ≧99 percent, as measured by the DOP test (ASTM–2986) with 0.3 µm particles at the sampler's operating face velocity.

7.2.3 *Integrity*. ±5 µg/m³ (assuming sampler's nominal 24-hour air sample volume). Integrity is measured as the PM_{10} concentration equivalent corresponding to the average difference between the initial and the final weights of a random sample of test filters that are weighed and handled under actual or simulated sampling conditions, but have no air sample passed through them (i.e., filter blanks). As a minimum, the test procedure must include initial equilibration and weighing, installation on an inoperative sampler, removal from the sampler, and final equilibration and weighing.

7.2.4 *Alkalinity*. <25 microequivalents/gram of filter, as measured by the procedure given in Reference 13 following at least two months storage in a clean environment (free from contamination by acidic gases) at room temperature and humidity.

7.3 *Flow Rate Transfer Standard.* The flow rate transfer standard must be suitable for the sampler's operating flow rate and must be calibrated against a primary flow or volume standard that is traceable to the National Bureau of Standards (NBS). The flow rate transfer standard must be capable of measuring the sampler's operating flow rate with an accuracy of ±2 percent.

7.4 *Filter Conditioning Environment.*

7.4.1 Temperature range: 15 to 30 C.

7.4.2 Temperature control: ±3 C.

7.4.3 Humidity range: 20% to 45% RH.

7.4.4 Humidity control: ±5% RH.

7.5 *Analytical Balance.* The analytical balance must be suitable for weighing the type and size of filters required by the sampler. The range and sensitivity required will depend on the filter tare weights and mass loadings. Typically, an analytical balance with a sensitivity of 0.1 mg is required for high volume samplers (flow rates >0.5 m³/min). Lower volume samplers (flow rates <0.5 m³/min) will require a more sensitive balance.

8.0 *Calibration.*

8.1 *General Requirements.*

8.1.1 Calibration of the sampler's flow measurement device is required to establish traceability of subsequent flow measurements to a primary standard. A flow rate transfer standard calibrated against a primary flow or volume standard shall be used to calibrate or verify the accuracy of the sampler's flow measurement device.

8.1.2 Particle size discrimination by inertial separation requires that specific air velocities be maintained in the sampler's air inlet system. Therefore, the flow rate through the sampler's inlet must be maintained throughout the sampling period within the design flow rate range specified by the manufacturer. Design flow rates are specified as actual volumetric flow rates, measured at existing conditions of temperature and pressure (Q_a). In contrast, mass concentrations of PM_{10} are computed using flow rates corrected to EPA reference conditions of temperature and pressure (Q_{std}).

8.2 *Flow Rate Calibration Procedure.*

8.2.1 PM_{10} samplers employ various types of flow control and flow measurement devices. The specific procedure used for flow rate calibration or verification will vary depending on the type of flow controller and flow indicator employed. Calibration in terms of actual volumetric flow rates (Q_a) is generally recommended, but other measures of flow rate (e.g., Q_{std}) may be used provided the requirements of section 8.1 are met. The general procedure given here is based on actual volumetric flow units (Q_a) and serves to illustrate the steps involved in the calibration of a PM_{10} sampler. Consult the sampler manufacturer's instruction manual and Reference 2 for specific guidance on calibration. Reference 14 provides additional information on the use of the commonly used measures of flow rate and their interrelationships.

8.2.2 Calibrate the flow rate transfer standard against a primary flow or volume standard traceable to NBS. Establish a calibration relationship (e.g., an equation or family of curves) such that traceability to the primary standard is accurate to within 2 percent over the expected range of ambient conditions (i.e., temperatures and pressures) under which the transfer standard will be used. Recalibrate the transfer standard periodically.

8.2.3 Following the sampler manufacturer's instruction manual, remove the sampler inlet and connect the flow rate transfer standard to the sampler such that the transfer standard accurately measures the sampler's flow rate. Make sure there are no leaks between the transfer standard and the sampler.

8.2.4 Choose a minimum of three flow rates (actual m³/min), spaced over the acceptable flow rate range specified for the inlet (see 7.1.2) that can be obtained by suitable adjustment of the sampler flow rate. In accordance with the sampler manufacturer's instruction manual, obtain or verify the calibration relationship between the flow rate (actual m³/min) as indicated by the transfer standard and the sampler's flow indicator response. Record the ambient temperature and barometric pressure. Temperature and pressure corrections to subsequent flow indicator readings may be required for certain types of

flow measurement devices. When such corrections are necessary, correction on an individual or daily basis is preferable. However, seasonal average temperature and average barometric pressure for the sampling site may be incorporated into the sampler calibration to avoid daily corrections. Consult the sampler manufacturer's instruction manual and Reference 2 for additional guidance.

8.2.5 Following calibration, verify that the sampler is operating at its design flow rate (actual m^3/min) with a clean filter in place.

8.2.6 Replace the sampler inlet.

9.0 *Procedure.*

9.1 The sampler shall be operated in accordance with the specific guidance provided in the sampler manufacturer's instruction manual and in Reference 2. The general procedure given here assumes that the sampler's flow rate calibration is based on flow rates at ambient conditions (Q_a) and serves to illustrate the steps involved in the operation of a PM_{10} sampler.

9.2 Inspect each filter for pinholes, particles, and other imperfections. Establish a filter information record and assign an identification number to each filter.

9.3 Equilibrate each filter in the conditioning environment (see 7.4) for at least 24 hours.

9.4 Following equilibration, weigh each filter and record the presampling weight with the filter identification number.

9.5 Install a preweighed filter in the sampler following the instructions provided in the sampler manufacturer's instruction manual.

9.6 Turn on the sampler and allow it to establish run-temperature conditions. Record the flow indicator reading and, if needed, the ambient temperature and barometric pressure. Determine the sampler flow rate (actual m^3/min) in accordance with the instructions provided in the sampler manufacturer's instruction manual. NOTE.—No onsite temperature or pressure measurements are necessary if the sampler's flow indicator does not require temperature or pressure corrections or if seasonal average temperature and average barometric pressure for the sampling site are incorporated into the sampler calibration (see step 8.2.4). If individual or daily temperature and pressure corrections are required, ambient temperature and barometric pressure can be obtained by on-site measurements or from a nearby weather station. Barometric pressure readings obtained from airports must be station pressure, not corrected to sea level, and may need to be corrected for differences in elevation between the sampling site and the airport.

9.7 If the flow rate is outside the acceptable range specified by the manufacturer, check for leaks, and if necessary, adjust the flow rate to the specified setpoint. Stop the sampler.

9.8 Set the timer to start and stop the sampler at appropriate times. Set the elapsed time meter to zero or record the initial meter reading.

9.9 Record the sample information (site location or identification number, sample date, filter identification number, and sampler model and serial number).

9.10 Sample for 24±1 hours.

9.11 Determine and record the average flow rate (Q_a) in actual m^3/min for the sampling period in accordance with the instructions provided in the sampler manufacturer's instruction manual. Record the elapsed time meter final reading and, if needed, the average ambient temperature and barometric pressure for the sampling period (see note following step 9.6).

9.12 Carefully remove the filter from the sampler, following the sampler manufacturer's instruction manual. Touch only the outer edges of the filter.

9.13 Place the filter in a protective holder or container (e.g., petri dish, glassine envelope, or manila folder).

9.14 Record any factors such as meteorological conditions, construction activity, fires or dust storms, etc., that might be pertinent to the measurement on the filter information record.

9.15 Transport the exposed sample filter to the filter conditioning environment as soon as possible for equilibration and subsequent weighing.

9.16 Equilibrate the exposed filter in the conditioning environment for at least 24 hours under the same temperature and humidity conditions used for presampling filter equilibration (see 9.3).

9.17 Immediately after equilibration, reweigh the filter and record the postsampling weight with the filter identification number.

10.0 *Sampler Maintenance.*

10.1 The PM_{10} sampler shall be maintained in strict accordance with the maintenance procedures specified in the sampler manufacturer's instruction manual.

11.0 *Calculations.*

11.1 Calculate the average flow rate over the sampling period corrected to EPA reference conditions as $\bar{Q}_{std}$. When the sampler's flow indicator is calibrated in actual volumetric units (Q_a), $\bar{Q}_{std}$ is calculated as:

$$\bar{Q}_{std}=\bar{Q}_a\times(P_{av}/T_{av})(T_{std}/P_{std})$$

where

$\bar{Q}_{std}$ = average flow rate at EPA reference conditions, std m^3/min;

$\bar{Q}_a$ = average flow rate at ambient conditions, m^3/min;

P_{av} = average barometric pressure during the sampling period or average barometric pressure for the sampling site, kPa (or mm Hg);

T_{av} = average ambient temperature during the sampling period or seasonal average

ambient temperature for the sampling site, K;

T_{std} = standard temperature, defined as 298 K;

P_{std} = standard pressure, defined as 101.3 kPa (or 760 mm Hg).

11.2 Calculate the total volume of air sampled as:

$$V_{std} = \bar{Q}_{std} \times t$$

where

V_{std} = total air sampled in standard volume units, std m^3;

t = sampling time, min.

11.3 Calculate the PM_{10} concentration as:

$$PM_{10} = (W_f - W_i) \times 10^6 / V_{std}$$

where

PM_{10} = mass concentration of PM_{10}, µg/std m^3;

W_f, W_i = final and initial weights of filter collecting PM_{1O} particles, g;

10^6 = conversion of g to µg.

NOTE: If more than one size fraction in the PM_{10} size range is collected by the sampler, the sum of the net weight gain by each collection filter $[\Sigma(W_f - W_i)]$ is used to calculate the PM_{10} mass concentration.

12.0 *References.*

1. Quality Assurance Handbook for Air Pollution Measurement Systems, Volume I, Principles. EPA–600/9–76–005, March 1976. Available from CERI, ORD Publications, U.S. Environmental Protection Agency, 26 West St. Clair Street, Cincinnati, OH 45268.

2. Quality Assurance Handbook for Air Pollution Measurement Systems, Volume II, Ambient Air Specific Methods. EPA–600/4–77–027a, May 1977. Available from CERI, ORD Publications, U.S. Environmental Protection Agency, 26 West St. Clair Street, Cincinnati, OH 45268.

3. Clement, R.E., and F.W. Karasek. Sample Composition Changes in Sampling and Analysis of Organic Compounds in Aerosols. Int. J. Environ. Analyt. Chem., 7:109, 1979.

4. Lee, R.E., Jr., and J. Wagman. A Sampling Anomaly in the Determination of Atmospheric Sulfate Concentration. Amer. Ind. Hyg. Assoc. J., 27:266, 1966.

5. Appel, B.R., S.M. Wall, Y. Tokiwa, and M. Haik. Interference Effects in Sampling Particulate Nitrate in Ambient Air. Atmos. Environ., 13:319, 1979.

6. Coutant, R.W. Effect of Environmental Variables on Collection of Atmospheric Sulfate. Environ. Sci. Technol., 11:873, 1977.

7. Spicer, C.W., and P. Schumacher. Interference in Sampling Atmospheric Particulate Nitrate. Atmos. Environ., 11:873, 1977.

8. Appel, B.R., Y. Tokiwa, and M. Haik. Sampling of Nitrates in Ambient Air. Atmos. Environ., 15:283, 1981.

9. Spicer, C.W., and P.M. Schumacher. Particulate Nitrate: Laboratory and Field Studies of Major Sampling Interferences. Atmos. Environ., 13:543, 1979.

10. Appel, B.R. Letter to Larry Purdue, U.S. EPA, Environmental Monitoring and Support Laboratory. March 18, 1982, Docket No. A–82–37, II–I–1.

11. Pierson, W.R., W.W. Brachaczek, T.J. Korniski, T.J. Truex, and J.W. Butler. Artifact Formation of Sulfate, Nitrate, and Hydrogen Ion on Backup Filters: Allegheny Mountain Experiment. J. Air Pollut. Control Assoc., 30:30, 1980.

12. Dunwoody, C.L. Rapid Nitrate Loss From PM_{10} Filters. J. Air Pollut. Control Assoc., 36:817, 1986.

13. Harrell, R.M. Measuring the Alkalinity of Hi-Vol Air Filters. EMSL/RTP–SOP–QAD–534, October 1985. Available from the U.S. Environmental Protection Agency, EMSL/QAD, Research Triangle Park, NC 27711.

14. Smith, F., P.S. Wohlschlegel, R.S.C. Rogers, and D.J. Mulligan. Investigation of Flow Rate Calibration Procedures Associated With the High Volume Method for Determination of Suspended Particulates. EPA–600/4–78–047, U.S. Environmental Protection Agency, Research Triangle Park, NC 27711, 1978.

[52 FR 24664, July 1, 1987; 52 FR 29467, Aug. 7, 1987]

APPENDIX K TO PART 50—INTERPRETATION OF THE NATIONAL AMBIENT AIR QUALITY STANDARDS FOR PARTICULATE MATTER

1.0 *General.*

(a) This appendix explains the computations necessary for analyzing particulate matter data to determine attainment of the 24-hour and annual standards specified in 40 CFR 50.6. For the primary and secondary standards, particulate matter is measured in the ambient air as PM_{10} (particles with an aerodynamic diameter less than or equal to a nominal 10 micrometers) by a reference method based on appendix J of this part and designated in accordance with part 53 of this chapter, or by an equivalent method designated in accordance with part 53 of this chapter. The required frequency of measurements is specified in part 58 of this chapter.

(b) The terms used in this appendix are defined as follows:

Average refers to an arithmetic mean. All particulate matter standards are expressed in terms of expected annual values: Expected number of exceedances per year for the 24-hour standards and expected annual arithmetic mean for the annual standards.

Daily value for PM_{10} refers to the 24-hour average concentration of PM_{10} calculated or measured from midnight to midnight (local time).

Exceedance means a daily value that is above the level of the 24-hour standard after

rounding to the nearest 10 μg/m³ (i.e., values ending in 5 or greater are to be rounded up).

Expected annual value is the number approached when the annual values from an increasing number of years are averaged, in the absence of long-term trends in emissions or meteorological conditions.

Year refers to a calendar year.

(c) Although the discussion in this appendix focuses on monitored data, the same principles apply to modeling data, subject to EPA modeling guidelines.

2.0 *Attainment Determinations.*

2.1 *24-Hour Primary and Secondary Standards.*

(a) Under 40 CFR 50.6(a) the 24-hour primary and secondary standards are attained when the expected number of exceedances per year at each monitoring site is less than or equal to one. In the simplest case, the number of expected exceedances at a site is determined by recording the number of exceedances in each calendar year and then averaging them over the past 3 calendar years. Situations in which 3 years of data are not available and possible adjustments for unusual events or trends are discussed in sections 2.3 and 2.4 of this appendix. Further, when data for a year are incomplete, it is necessary to compute an estimated number of exceedances for that year by adjusting the observed number of exceedances. This procedure, performed by calendar quarter, is described in section 3.0 of this appendix. The expected number of exceedances is then estimated by averaging the individual annual estimates for the past 3 years.

(b) The comparison with the allowable expected exceedance rate of one per year is made in terms of a number rounded to the nearest tenth (fractional values equal to or greater than 0.05 are to be rounded up; e.g., an exceedance rate of 1.05 would be rounded to 1.1, which is the lowest rate for nonattainment).

2.2 *Annual Primary and Secondary Standards.* Under 40 CFR 50.6(b), the annual primary and secondary standards are attained when the expected annual arithmetic mean PM_{10} concentration is less than or equal to the level of the standard. In the simplest case, the expected annual arithmetic mean is determined by averaging the annual arithmetic mean PM_{10} concentrations for the past 3 calendar years. Because of the potential for incomplete data and the possible seasonality in PM_{10} concentrations, the annual mean shall be calculated by averaging the four quarterly means of PM_{10} concentrations within the calendar year. The equations for calculating the annual arithmetic mean are given in section 4.0 of this appendix. Situations in which 3 years of data are not available and possible adjustments for unusual events or trends are discussed in sections 2.3 and 2.4 of this appendix. The expected annual arithmetic mean is rounded to the nearest 1 μg/m³ before comparison with the annual standards (fractional values equal to or greater than 0.5 are to be rounded up).

2.3 *Data Requirements.*

(a) 40 CFR 58.13 specifies the required minimum frequency of sampling for PM_{10}. For the purposes of making comparisons with the particulate matter standards, all data produced by National Air Monitoring Stations (NAMS), State and Local Air Monitoring Stations (SLAMS) and other sites submitted to EPA in accordance with the part 58 requirements must be used, and a minimum of 75 percent of the scheduled PM_{10} samples per quarter are required.

(b) To demonstrate attainment of either the annual or 24-hour standards at a monitoring site, the monitor must provide sufficient data to perform the required calculations of sections 3.0 and 4.0 of this appendix. The amount of data required varies with the sampling frequency, data capture rate and the number of years of record. In all cases, 3 years of representative monitoring data that meet the 75 percent criterion of the previous paragraph should be utilized, if available, and would suffice. More than 3 years may be considered, if all additional representative years of data meeting the 75 percent criterion are utilized. Data not meeting these criteria may also suffice to show attainment; however, such exceptions will have to be approved by the appropriate Regional Administrator in accordance with EPA guidance.

(c) There are less stringent data requirements for showing that a monitor has failed an attainment test and thus has recorded a violation of the particulate matter standards. Although it is generally necessary to meet the minimum 75 percent data capture requirement per quarter to use the computational equations described in sections 3.0 and 4.0 of this appendix, this criterion does not apply when less data is sufficient to unambiguously establish nonattainment. The following examples illustrate how nonattainment can be demonstrated when a site fails to meet the completeness criteria. Nonattainment of the 24-hour primary standards can be established by the observed annual number of exceedances (e.g., four observed exceedances in a single year), or by the estimated number of exceedances derived from the observed number of exceedances and the required number of scheduled samples (e.g., two observed exceedances with every other day sampling). Nonattainment of the annual standards can be demonstrated on the basis of quarterly mean concentrations developed from observed data combined with one-half the minimum detectable concentration substituted for missing values. In both cases, expected annual values must exceed the levels allowed by the standards.

2.4 *Adjustment for Exceptional Events and Trends.*

(a) An exceptional event is an uncontrollable event caused by natural sources of particulate matter or an event that is not expected to recur at a given location. Inclusion of such a value in the computation of exceedances or averages could result in inappropriate estimates of their respective expected annual values. To reduce the effect of unusual events, more than 3 years of representative data may be used. Alternatively, other techniques, such as the use of statistical models or the use of historical data could be considered so that the event may be discounted or weighted according to the likelihood that it will recur. The use of such techniques is subject to the approval of the appropriate Regional Administrator in accordance with EPA guidance.

(b) In cases where long–term trends in emissions and air quality are evident, mathematical techniques should be applied to account for the trends to ensure that the expected annual values are not inappropriately biased by unrepresentative data. In the simplest case, if 3 years of data are available under stable emission conditions, this data should be used. In the event of a trend or shift in emission patterns, either the most recent representative year(s) could be used or statistical techniques or models could be used in conjunction with previous years of data to adjust for trends. The use of less than 3 years of data, and any adjustments are subject to the approval of the appropriate Regional Administrator in accordance with EPA guidance.

3.0 *Computational Equations for the 24-hour Standards.*

3.1 *Estimating Exceedances for a Year.*

(a) If PM_{10} sampling is scheduled less frequently than every day, or if some scheduled samples are missed, a PM_{10} value will not be available for each day of the year. To account for the possible effect of incomplete data, an adjustment must be made to the data collected at each monitoring location to estimate the number of exceedances in a calendar year. In this adjustment, the assumption is made that the fraction of missing values that would have exceeded the standard level is identical to the fraction of measured values above this level. This computation is to be made for all sites that are scheduled to monitor throughout the entire year and meet the minimum data requirements of section 2.3 of this appendix. Because of possible seasonal imbalance, this adjustment shall be applied on a quarterly basis. The estimate of the expected number of exceedances for the quarter is equal to the observed number of exceedances plus an increment associated with the missing data. The following equation must be used for these computations:

Equation 1

$$e_q = v_q + \left[\left(v_q/n_q\right)\times\left(N_q - n_q\right)\right] = v_q \times N_q/n_q$$

where:

e_q = the estimated number of exceedances for calendar quarter q;

v_q = the observed number of exceedances for calendar quarter q;

N_q = the number of days in calendar quarter q;

n_q = the number of days in calendar quarter q with PM_{10} data; and

q = the index for calendar quarter, q=1, 2, 3 or 4.

(b) The estimated number of exceedances for a calendar quarter must be rounded to the nearest hundredth (fractional values equal to or greater than 0.005 must be rounded up).

(c) The estimated number of exceedances for the year, e, is the sum of the estimates for each calendar quarter.

Equation 2

$$e = \sum_{q=1}^{4} e_q$$

(d) The estimated number of exceedances for a single year must be rounded to one decimal place (fractional values equal to or greater than 0.05 are to be rounded up). The expected number of exceedances is then estimated by averaging the individual annual estimates for the most recent 3 or more representative years of data. The expected number of exceedances must be rounded to one decimal place (fractional values equal to or greater than 0.05 are to be rounded up).

(e) The adjustment for incomplete data will not be necessary for monitoring or modeling data which constitutes a complete record, i.e., 365 days per year.

(f) To reduce the potential for overestimating the number of expected exceedances, the correction for missing data will not be required for a calendar quarter in which the first observed exceedance has occurred if:

(1) There was only one exceedance in the calendar quarter;

(2) Everyday sampling is subsequently initiated and maintained for 4 calendar quarters in accordance with 40 CFR 58.13; and

(3) Data capture of 75 percent is achieved during the required period of everyday sampling. In addition, if the first exceedance is observed in a calendar quarter in which the monitor is already sampling every day, no adjustment for missing data will be made to the first exceedance if a 75 percent data capture rate was achieved in the quarter in which it was observed.

Example 1

a. During a particular calendar quarter, 39 out of a possible 92 samples were recorded, with one observed exceedance of the 24-hour standard. Using Equation 1, the estimated number of exceedances for the quarter is:

e_q=1×92/39=2.359 or 2.36.

b. If the estimated exceedances for the other 3 calendar quarters in the year were 2.30, 0.0 and 0.0, then, using Equation 2, the estimated number of exceedances for the year is 2.36=2.30=0.0=0.0 which equals 4.66 or 4.7. If no exceedances were observed for the 2 previous years, then the expected number of exceedances is estimated by: (1/3)×(4.7=0=0)=1.57 or 1.6. Since 1.6 exceeds the allowable number of expected exceedances, this monitoring site would fail the attainment test.

Example 2

In this example, everyday sampling was initiated following the first observed exceedance as required by 40 CFR 58.13. Accordingly, the first observed exceedance would not be adjusted for incomplete sampling. During the next three quarters, 1.2 exceedances were estimated. In this case, the estimated exceedances for the year would be 1.0=1.2=0.0=0.0 which equals 2.2. If, as before, no exceedances were observed for the two previous years, then the estimated exceedances for the 3–year period would then be (1/3)×(2.2=0.0=0.0)=0.7, and the monitoring site would *not* fail the attainment test.

3.2 *Adjustments for Non-Scheduled Sampling Days.*

(a) If a systematic sampling schedule is used and sampling is performed on days in addition to the days specified by the systematic sampling schedule, e.g., during episodes of high pollution, then an adjustment must be made in the eqution for the estimation of exceedances. Such an adjustment is needed to eliminate the bias in the estimate of the quarterly and annual number of exceedances that would occur if the chance of an exceedance is different for scheduled than for nonscheduled days, as would be the case with episode sampling.

(b) The required adjustment treats the systematic sampling schedule as a stratified sampling plan. If the period from one scheduled sample until the day preceding the next scheduled sample is defined as a sampling stratum, then there is one stratum for each scheduled sampling day. An average number of observed exceedances is computed for each of these sampling strata. With nonscheduled sampling days, the estimated number of exceedances is defined as:

Equation 3

$$e_q = \left(N_q / m_q\right) \times \sum_{j=1}^{m_q} \left(v_j / k_j\right)$$

where:

e_q = the estimated number of exceedances for the quarter;
N_q = the number of days in the quarter;
m_q = the number of strata with samples during the quarter;
v_j = the number of observed exceedances in stratum j; and
k_j = the number of actual samples in stratum j.

(c) Note that if only one sample value is recorded in each stratum, then Equation 3 reduces to Equation 1.

Example 3

A monitoring site samples according to a systematic sampling schedule of one sample every 6 days, for a total of 15 scheduled samples in a quarter out of a total of 92 possible samples. During one 6-day period, potential episode levels of PM_{10} were suspected, so 5 additional samples were taken. One of the regular scheduled samples was missed, so a total of 19 samples in 14 sampling strata were measured. The one 6-day sampling stratum with 6 samples recorded 2 exceedances. The remainder of the quarter with one sample per stratum recorded zero exceedances. Using Equation 3, the estimated number of exceedances for the quarter is:

e_q=(92/14)×(2/6=0=. . .=0)=2.19.

4.0 *Computational Equations for Annual Standards.*

4.1 *Calculation of the Annual Arithmetic Mean.* (a) An annual arithmetic mean value for PM_{10} is determined by averaging the quarterly means for the 4 calendar quarters of the year. The following equation is to be used for calculation of the mean for a calendar quarter:

Equation 4

$$\bar{x}_q = \left(1/n_q\right) \times \sum_{i=1}^{n_q} x_i$$

where:

$\bar{x}_q$ = the quarterly mean concentration for quarter q, q=1, 2, 3, or 4,
n_q = the number of samples in the quarter, and
x_i = the ith concentration value recorded in the quarter.

(b) The quarterly mean, expressed in μg/m³, must be rounded to the nearest tenth (fractional values of 0.05 should be rounded up).

(c) The annual mean is calculated by using the following equation:

Equation 5

$$\bar{x} = \left(\frac{1}{4}\right) \times \sum_{q=1}^{4} \bar{x}_q$$

where:

$\bar{x}$ = the annual mean; and

$\bar{x}_q$ = the mean for calendar quarter q.

(d) The average of quarterly means must be rounded to the nearest tenth (fractional values of 0.05 should be rounded up).

(e) The use of quarterly averages to compute the annual average will not be necessary for monitoring or modeling data which results in a complete record, i.e., 365 days per year.

(f) The expected annual mean is estimated as the average of three or more annual means. This multi-year estimate, expressed in µg/m³, shall be rounded to the nearest integer for comparison with the annual standard (fractional values of 0.5 should be rounded up).

Example 4

Using Equation 4, the quarterly means are calculated for each calendar quarter. If the quarterly means are 52.4, 75.3, 82.1, and 63.2 µg/m³, then the annual mean is:

$\bar{x}$ = (1/4)×(52.4=75.3=82.1=63.2) = 68.25 or 68.3.

4.2 *Adjustments for Non-scheduled Sampling Days.* (a) An adjustment in the calculation of the annual mean is needed if sampling is performed on days in addition to the days specified by the systematic sampling schedule. For the same reasons given in the discussion of estimated exceedances, under section 3.2 of this appendix, the quarterly averages would be calculated by using the following equation:

Equation 6

$$\bar{x}_q = \left(\frac{1}{m_q}\right) \times \sum_{j=1}^{m_q} \sum_{i=1}^{k_j} \left(x_{ij}/k_j\right)$$

where:

$\bar{x}_q$ = the quarterly mean concentration for quarter q, q=1, 2, 3, or 4;

x_{ij} = the ith concentration value recorded in stratum j;

k_j = the number of actual samples in stratum j; and

m_q = the number of strata with data in the quarter.

(b) If one sample value is recorded in each stratum, Equation 6 reduces to a simple arithmetic average of the observed values as described by Equation 4.

Example 5

a. During one calendar quarter, 9 observations were recorded. These samples were distributed among 7 sampling strata, with 3 observations in one stratum. The concentrations of the 3 observations in the single stratum were 202, 242, and 180 µg/m³. The remaining 6 observed concentrations were 55, 68, 73, 92, 120, and 155 µg/m³. Applying the weighting factors specified in Equation 6, the quarterly mean is:

$\bar{x}_q$ = (1/7) × [(1/3) × (202 = 242 = 180) = 155 = 68 = 73 = 92 = 120 = 155] = 110.1

b. Although 24-hour measurements are rounded to the nearest 10 µg/m³ for determinations of exceedances of the 24-hour standard, note that these values are rounded to the nearest 1 µg/m³ for the calculation of means.

[62 FR 38712, July 18, 1997]

APPENDIX L TO PART 50—REFERENCE METHOD FOR THE DETERMINATION OF FINE PARTICULATE MATTER AS $PM_{2.5}$ IN THE ATMOSPHERE

1.0 *Applicability.*

1.1 This method provides for the measurement of the mass concentration of fine particulate matter having an aerodynamic diameter less than or equal to a nominal 2.5 micrometers ($PM_{2.5}$) in ambient air over a 24-hour period for purposes of determining whether the primary and secondary national ambient air quality standards for fine particulate matter specified in §50.7 of this part are met. The measurement process is considered to be nondestructive, and the $PM_{2.5}$ sample obtained can be subjected to subsequent physical or chemical analyses. Quality assessment procedures are provided in part 58, appendix A of this chapter, and quality assurance guidance are provided in references 1, 2, and 3 in section 13.0 of this appendix.

1.2 This method will be considered a reference method for purposes of part 58 of this chapter only if:

(a) The associated sampler meets the requirements specified in this appendix and the applicable requirements in part 53 of this chapter, and

(b) The method and associated sampler have been designated as a reference method in accordance with part 53 of this chapter.

1.3 $PM_{2.5}$ samplers that meet nearly all specifications set forth in this method but have minor deviations and/or modifications of the reference method sampler will be designated as ''Class I'' equivalent methods for $PM_{2.5}$ in accordance with part 53 of this chapter.

2.0 *Principle.*

2.1 An electrically powered air sampler draws ambient air at a constant volumetric flow rate into a specially shaped inlet and

through an inertial particle size separator (impactor) where the suspended particulate matter in the $PM_{2.5}$ size range is separated for collection on a polytetrafluoroethylene (PTFE) filter over the specified sampling period. The air sampler and other aspects of this reference method are specified either explicitly in this appendix or generally with reference to other applicable regulations or quality assurance guidance.

2.2 Each filter is weighed (after moisture and temperature conditioning) before and after sample collection to determine the net gain due to collected $PM_{2.5}$. The total volume of air sampled is determined by the sampler from the measured flow rate at actual ambient temperature and pressure and the sampling time. The mass concentration of $PM_{2.5}$ in the ambient air is computed as the total mass of collected particles in the $PM_{2.5}$ size range divided by the actual volume of air sampled, and is expressed in micrograms per cubic meter of air ($\mu g/m^3$).

3.0 *$PM_{2.5}$ Measurement Range.*

3.1 *Lower concentration limit.* The lower detection limit of the mass concentration measurement range is estimated to be approximately 2 $\mu g/m^3$, based on noted mass changes in field blanks in conjunction with the 24 m^3 nominal total air sample volume specified for the 24-hour sample.

3.2 *Upper concentration limit.* The upper limit of the mass concentration range is determined by the filter mass loading beyond which the sampler can no longer maintain the operating flow rate within specified limits due to increased pressure drop across the loaded filter. This upper limit cannot be specified precisely because it is a complex function of the ambient particle size distribution and type, humidity, the individual filter used, the capacity of the sampler flow rate control system, and perhaps other factors. Nevertheless, all samplers are estimated to be capable of measuring 24-hour $PM_{2.5}$ mass concentrations of at least 200 $\mu g/m^3$ while maintaining the operating flow rate within the specified limits.

3.3 *Sample period.* The required sample period for $PM_{2.5}$ concentration measurements by this method shall be 1,380 to 1500 minutes (23 to 25 hours). However, when a sample period is less than 1,380 minutes, the measured concentration (as determined by the collected $PM_{2.5}$ mass divided by the actual sampled air volume), multiplied by the actual number of minutes in the sample period and divided by 1,440, may be used as if it were a valid concentration measurement for the specific purpose of determining a violation of the NAAQS. This value assumes that the $PM_{2.5}$ concentration is zero for the remaining portion of the sample period and therefore represents the minimum concentration that could have been measured for the full 24-hour sample period. Accordingly, if the value thus calculated is high enough to be an exceedance, such an exceedance would be a valid exceedance for the sample period. When reported to AIRS, this data value should receive a special code to identify it as not to be commingled with normal concentration measurements or used for other purposes.

4.0 *Accuracy.*

4.1 Because the size and volatility of the particles making up ambient particulate matter vary over a wide range and the mass concentration of particles varies with particle size, it is difficult to define the accuracy of $PM_{2.5}$ measurements in an absolute sense. The accuracy of $PM_{2.5}$ measurements is therefore defined in a relative sense, referenced to measurements provided by this reference method. Accordingly, accuracy shall be defined as the degree of agreement between a subject field $PM_{2.5}$ sampler and a collocated $PM_{2.5}$ reference method audit sampler operating simultaneously at the monitoring site location of the subject sampler and includes both random (precision) and systematic (bias) errors. The requirements for this field sampler audit procedure are set forth in part 58, appendix A of this chapter.

4.2 *Measurement system bias.* Results of collocated measurements where the duplicate sampler is a reference method sampler are used to assess a portion of the measurement system bias according to the schedule and procedure specified in part 58, appendix A of this chapter.

4.3 *Audits with reference method samplers to determine system accuracy and bias.* According to the schedule and procedure specified in part 58, appendix A of this chapter, a reference method sampler is required to be located at each of selected $PM_{2.5}$ SLAMS sites as a duplicate sampler. The results from the primary sampler and the duplicate reference method sampler are used to calculate accuracy of the primary sampler on a quarterly basis, bias of the primary sampler on an annual basis, and bias of a single reporting organization on an annual basis. Reference 2 in section 13.0 of this appendix provides additional information and guidance on these reference method audits.

4.4 *Flow rate accuracy and bias.* Part 58, appendix A of this chapter requires that the flow rate accuracy and bias of individual $PM_{2.5}$ samplers used in SLAMS monitoring networks be assessed periodically via audits of each sampler's operational flow rate. In addition, part 58, appendix A of this chapter requires that flow rate bias for each reference and equivalent method operated by each reporting organization be assessed quarterly and annually. Reference 2 in section 13.0 of this appendix provides additional information and guidance on flow rate accuracy audits and calculations for accuracy and bias.

5.0 *Precision.* A data quality objective of 10 percent coefficient of variation or better has

been established for the operational precision of $PM_{2.5}$ monitoring data.

5.1 Tests to establish initial operational precision for each reference method sampler are specified as a part of the requirements for designation as a reference method under § 53.58 of this chapter.

5.2 *Measurement System Precision.* Collocated sampler results, where the duplicate sampler is not a reference method sampler but is a sampler of the same designated method as the primary sampler, are used to assess measurement system precision according to the schedule and procedure specified in part 58, appendix A of this chapter. Part 58, appendix A of this chapter requires that these collocated sampler measurements be used to calculate quarterly and annual precision estimates for each primary sampler and for each designated method employed by each reporting organization. Reference 2 in section 13.0 of this appendix provides additional information and guidance on this requirement.

6.0 *Filter for $PM_{2.5}$ Sample Collection.* Any filter manufacturer or vendor who sells or offers to sell filters specifically identified for use with this $PM_{2.5}$ reference method shall certify that the required number of filters from each lot of filters offered for sale as such have been tested as specified in this section 6.0 and meet all of the following design and performance specifications.

6.1 *Size.* Circular, 46.2 mm diameter ±0.25 mm.

6.2 *Medium.* Polytetrafluoroethylene (PTFE Teflon), with integral support ring.

6.3 *Support ring.* Polymethylpentene (PMP) or equivalent inert material, 0.38 ±0.04 mm thick, outer diameter 46.2 mm ±0.25 mm, and width of 3.68 mm (±0.00, -0.51 mm).

6.4 *Pore size.* 2 µm as measured by ASTM F 316–94.

6.5 *Filter thickness.* 30 to 50 µm.

6.6 *Maximum pressure drop (clean filter).* 30 cm H_2O column @ 16.67 L/min clean air flow.

6.7 *Maximum moisture pickup.* Not more than 10 µg weight increase after 24-hour exposure to air of 40 percent relative humidity, relative to weight after 24-hour exposure to air of 35 percent relative humidity.

6.8 *Collection efficiency.* Greater than 99.7 percent, as measured by the DOP test (ASTM D 2986–91) with 0.3 µm particles at the sampler's operating face velocity.

6.9 *Filter weight stability.* Filter weight loss shall be less than 20 µg, as measured in each of the following two tests specified in sections 6.9.1 and 6.9.2 of this appendix. The following conditions apply to both of these tests: Filter weight loss shall be the average difference between the initial and the final filter weights of a random sample of test filters selected from each lot prior to sale. The number of filters tested shall be not less than 0.1 percent of the filters of each manufacturing lot, or 10 filters, whichever is greater. The filters shall be weighed under laboratory conditions and shall have had no air sample passed through them, i.e., filter blanks. Each test procedure must include initial conditioning and weighing, the test, and final conditioning and weighing. Conditioning and weighing shall be in accordance with sections 8.0 through 8.2 of this appendix and general guidance provided in reference 2 of section 13.0 of this appendix.

6.9.1 *Test for loose, surface particle contamination.* After the initial weighing, install each test filter, in turn, in a filter cassette (Figures L–27, L–28, and L–29 of this appendix) and drop the cassette from a height of 25 cm to a flat hard surface, such as a particle-free wood bench. Repeat two times, for a total of three drop tests for each test filter. Remove the test filter from the cassette and weigh the filter. The average change in weight must be less than 20 µg.

6.9.2 *Test for temperature stability.* After weighing each filter, place the test filters in a drying oven set at 40 °C ±2 °C for not less than 48 hours. Remove, condition, and reweigh each test filter. The average change in weight must be less than 20 µg.

6.10 *Alkalinity.* Less than 25 microequivalents/gram of filter, as measured by the guidance given in reference 2 in section 13.0 of this appendix.

6.11 *Supplemental requirements.* Although not required for determination of $PM_{2.5}$ mass concentration under this reference method, additional specifications for the filter must be developed by users who intend to subject $PM_{2.5}$ filter samples to subsequent chemical analysis. These supplemental specifications include background chemical contamination of the filter and any other filter parameters that may be required by the method of chemical analysis. All such supplemental filter specifications must be compatible with and secondary to the primary filter specifications given in this section 6.0 of this appendix.

7.0 *$PM_{2.5}$ Sampler.*

7.1 *Configuration.* The sampler shall consist of a sample air inlet, downtube, particle size separator (impactor), filter holder assembly, air pump and flow rate control system, flow rate measurement device, ambient and filter temperature monitoring system, barometric pressure measurement system, timer, outdoor environmental enclosure, and suitable mechanical, electrical, or electronic control capability to meet or exceed the design and functional performance as specified in this section 7.0 of this appendix. The performance specifications require that the sampler:

(a) Provide automatic control of sample volumetric flow rate and other operational parameters.

(b) Monitor these operational parameters as well as ambient temperature and pressure.

(c) Provide this information to the sampler operator at the end of each sample period in

digital form, as specified in table L–1 of section 7.4.19 of this appendix.

7.2 *Nature of specifications.* The $PM_{2.5}$ sampler is specified by a combination of design and performance requirements. The sample inlet, downtube, particle size discriminator, filter cassette, and the internal configuration of the filter holder assembly are specified explicitly by design figures and associated mechanical dimensions, tolerances, materials, surface finishes, assembly instructions, and other necessary specifications. All other aspects of the sampler are specified by required operational function and performance, and the design of these other aspects (including the design of the lower portion of the filter holder assembly) is optional, subject to acceptable operational performance. Test procedures to demonstrate compliance with both the design and performance requirements are set forth in subpart E of part 53 of this chapter.

7.3 *Design specifications.* Except as indicated in this section 7.3 of this appendix, these components must be manufactured or reproduced exactly as specified, in an ISO 9001-registered facility, with registration initially approved and subsequently maintained during the period of manufacture. See § 53.1(t) of this chapter for the definition of an ISO-registered facility. Minor modifications or variances to one or more components that clearly would not affect the aerodynamic performance of the inlet, downtube, impactor, or filter cassette will be considered for specific approval. Any such proposed modifications shall be described and submitted to the EPA for specific individual acceptability either as part of a reference or equivalent method application under part 53 of this chapter or in writing in advance of such an intended application under part 53 of this chapter.

7.3.1 *Sample inlet assembly.* The sample inlet assembly, consisting of the inlet, downtube, and impactor shall be configured and assembled as indicated in Figure L–1 of this appendix and shall meet all associated requirements. A portion of this assembly shall also be subject to the maximum overall sampler leak rate specification under section 7.4.6 of this appendix.

7.3.2 *Inlet.* The sample inlet shall be fabricated as indicated in Figures L–2 through L–18 of this appendix and shall meet all associated requirements.

7.3.3 *Downtube.* The downtube shall be fabricated as indicated in Figure L–19 of this appendix and shall meet all associated requirements.

7.3.4 *Impactor.*

7.3.4.1 The impactor (particle size separator) shall be fabricated as indicated in Figures L–20 through L–24 of this appendix and shall meet all associated requirements. Following the manufacture and finishing of each upper impactor housing (Figure L–21 of this appendix), the dimension of the impaction jet must be verified by the manufacturer using Class ZZ go/no-go plug gauges that are traceable to NIST.

7.3.4.2 Impactor filter specifications:

(a) Size. Circular, 35 to 37 mm diameter.

(b) Medium. Borosilicate glass fiber, without binder.

(c) Pore size. 1 to 1.5 micrometer, as measured by ASTM F 316–80.

(d) Thickness. 300 to 500 micrometers.

7.3.4.3 Impactor oil specifications:

(a) Composition. Tetramethyltetraphenyltrisiloxane, single-compound diffusion oil.

(b) Vapor pressure. Maximum 2×10^{-8} mm Hg at 25 °C.

(c) Viscosity. 36 to 40 centistokes at 25 °C.

(d) Density. 1.06 to 1.07 g/cm^3 at 25 °C.

(e) Quantity. 1 mL ±0.1 mL.

7.3.5 *Filter holder assembly.* The sampler shall have a sample filter holder assembly to adapt and seal to the down tube and to hold and seal the specified filter, under section 6.0 of this appendix, in the sample air stream in a horizontal position below the downtube such that the sample air passes downward through the filter at a uniform face velocity. The upper portion of this assembly shall be fabricated as indicated in Figures L–25 and L–26 of this appendix and shall accept and seal with the filter cassette, which shall be fabricated as indicated in Figures L–27 through L–29 of this appendix.

(a) The lower portion of the filter holder assembly shall be of a design and construction that:

(1) Mates with the upper portion of the assembly to complete the filter holder assembly,

(2) Completes both the external air seal and the internal filter cassette seal such that all seals are reliable over repeated filter changings, and

(3) Facilitates repeated changing of the filter cassette by the sampler operator.

(b) Leak–test performance requirements for the filter holder assembly are included in section 7.4.6 of this appendix.

(c) If additional or multiple filters are stored in the sampler as part of an automatic sequential sample capability, all such filters, unless they are currently and directly installed in a sampling channel or sampling configuration (either active or inactive), shall be covered or (preferably) sealed in such a way as to:

(1) Preclude significant exposure of the filter to possible contamination or accumulation of dust, insects, or other material that may be present in the ambient air, sampler, or sampler ventilation air during storage periods either before or after sampling; and

(2) To minimize loss of volatile or semi-volatile PM sample components during storage of the filter following the sample period.

7.3.6 *Flow rate measurement adapter.* A flow rate measurement adapter as specified in

Figure L–30 of this appendix shall be furnished with each sampler.

7.3.7 *Surface finish.* All internal surfaces exposed to sample air prior to the filter shall be treated electrolytically in a sulfuric acid bath to produce a clear, uniform anodized surface finish of not less than 1000 mg/ft^2 (1.08 mg/cm^2) in accordance with military standard specification (mil. spec.) 8625F, Type II, Class 1 in reference 4 of section 13.0 of this appendix. This anodic surface coating shall not be dyed or pigmented. Following anodization, the surfaces shall be sealed by immersion in boiling deionized water for not less than 15 minutes. Section 53.51(d)(2) of this chapter should also be consulted.

7.3.8 *Sampling height.* The sampler shall be equipped with legs, a stand, or other means to maintain the sampler in a stable, upright position and such that the center of the sample air entrance to the inlet, during sample collection, is maintained in a horizontal plane and is 2.0 ±0.2 meters above the floor or other horizontal supporting surface. Suitable bolt holes, brackets, tie-downs, or other means should be provided to facilitate mechanically securing the sample to the supporting surface to prevent toppling of the sampler due to wind.

7.4 *Performance specifications.*

7.4.1 *Sample flow rate.* Proper operation of the impactor requires that specific air velocities be maintained through the device. Therefore, the design sample air flow rate through the inlet shall be 16.67 L/min (1.000 m^3/hour) measured as actual volumetric flow rate at the temperature and pressure of the sample air entering the inlet.

7.4.2 *Sample air flow rate control system.* The sampler shall have a sample air flow rate control system which shall be capable of providing a sample air volumetric flow rate within the specified range, under section 7.4.1 of this appendix, for the specified filter, under section 6.0 of this appendix, at any atmospheric conditions specified, under section 7.4.7 of this appendix, at a filter pressure drop equal to that of a clean filter plus up to 75 cm water column (55 mm Hg), and over the specified range of supply line voltage, under section 7.4.15.1 of this appendix. This flow control system shall allow for operator adjustment of the operational flow rate of the sampler over a range of at least ±15 percent of the flow rate specified in section 7.4.1 of this appendix.

7.4.3 *Sample flow rate regulation.* The sample flow rate shall be regulated such that for the specified filter, under section 6.0 of this appendix, at any atmospheric conditions specified, under section 7.4.7 of this appendix, at a filter pressure drop equal to that of a clean filter plus up to 75 cm water column (55 mm Hg), and over the specified range of supply line voltage, under section 7.4.15.1 of this appendix, the flow rate is regulated as follows:

7.4.3.1 The volumetric flow rate, measured or averaged over intervals of not more than 5 minutes over a 24-hour period, shall not vary more than ±5 percent from the specified 16.67 L/min flow rate over the entire sample period.

7.4.3.2 The coefficient of variation (sample standard deviation divided by the mean) of the flow rate, measured over a 24-hour period, shall not be greater than 2 percent.

7.4.3.3 The amplitude of short-term flow rate pulsations, such as may originate from some types of vacuum pumps, shall be attenuated such that they do not cause significant flow measurement error or affect the collection of particles on the particle collection filter.

7.4.4 *Flow rate cut off.* The sampler's sample air flow rate control system shall terminate sample collection and stop all sample flow for the remainder of the sample period in the event that the sample flow rate deviates by more than 10 percent from the sampler design flow rate specified in section 7.4.1 of this appendix for more than 60 seconds. However, this sampler cut-off provision shall not apply during periods when the sampler is inoperative due to a temporary power interruption, and the elapsed time of the inoperative period shall not be included in the total sample time measured and reported by the sampler, under section 7.4.13 of this appendix.

7.4.5 *Flow rate measurement.*

7.4.5.1 The sampler shall provide a means to measure and indicate the instantaneous sample air flow rate, which shall be measured as volumetric flow rate at the temperature and pressure of the sample air entering the inlet, with an accuracy of ±2 percent. The measured flow rate shall be available for display to the sampler operator at any time in either sampling or standby modes, and the measurement shall be updated at least every 30 seconds. The sampler shall also provide a simple means by which the sampler operator can manually start the sample flow temporarily during non-sampling modes of operation, for the purpose of checking the sample flow rate or the flow rate measurement system.

7.4.5.2 During each sample period, the sampler's flow rate measurement system shall automatically monitor the sample volumetric flow rate, obtaining flow rate measurements at intervals of not greater than 30 seconds.

(a) Using these interval flow rate measurements, the sampler shall determine or calculate the following flow-related parameters, scaled in the specified engineering units:

(1) The instantaneous or interval-average flow rate, in L/min.

(2) The value of the average sample flow rate for the sample period, in L/min.

(3) The value of the coefficient of variation (sample standard deviation divided by the

average) of the sample flow rate for the sample period, in percent.

(4) The occurrence of any time interval during the sample period in which the measured sample flow rate exceeds a range of ±5 percent of the average flow rate for the sample period for more than 5 minutes, in which case a warning flag indicator shall be set.

(5) The value of the integrated total sample volume for the sample period, in m^3.

(b) Determination or calculation of these values shall properly exclude periods when the sampler is inoperative due to temporary interruption of electrical power, under section 7.4.13 of this appendix, or flow rate cut off, under section 7.4.4 of this appendix.

(c) These parameters shall be accessible to the sampler operator as specified in table L–1 of section 7.4.19 of this appendix. In addition, it is strongly encouraged that the flow rate for each 5-minute interval during the sample period be available to the operator following the end of the sample period.

7.4.6 *Leak test capability.*

7.4.6.1 *External leakage.* The sampler shall include an external air leak-test capability consisting of components, accessory hardware, operator interface controls, a written procedure in the associated Operation/Instruction Manual, under section 7.4.18 of this appendix, and all other necessary functional capability to permit and facilitate the sampler operator to conveniently carry out a leak test of the sampler at a field monitoring site without additional equipment. The sampler components to be subjected to this leak test include all components and their interconnections in which external air leakage would or could cause an error in the sampler's measurement of the total volume of sample air that passes through the sample filter.

(a) The suggested technique for the operator to use for this leak test is as follows:

(1) Remove the sampler inlet and installs the flow rate measurement adapter supplied with the sampler, under section 7.3.6 of this appendix.

(2) Close the valve on the flow rate measurement adapter and use the sampler air pump to draw a partial vacuum in the sampler, including (at least) the impactor, filter holder assembly (filter in place), flow measurement device, and interconnections between these devices, of at least 55 mm Hg (75 cm water column), measured at a location downstream of the filter holder assembly.

(3) Plug the flow system downstream of these components to isolate the components under vacuum from the pump, such as with a built-in valve.

(4) Stop the pump.

(5) Measure the trapped vacuum in the sampler with a built-in pressure measuring device.

(6) (i) Measure the vacuum in the sampler with the built-in pressure measuring device again at a later time at least 10 minutes after the first pressure measurement.

(ii) CAUTION: Following completion of the test, the adaptor valve should be opened slowly to limit the flow rate of air into the sampler. Excessive air flow rate may blow oil out of the impactor.

(7) Upon completion of the test, open the adaptor valve, remove the adaptor and plugs, and restore the sampler to the normal operating configuration.

(b) The associated leak test procedure shall require that for successful passage of this test, the difference between the two pressure measurements shall not be greater than the number of mm of Hg specified for the sampler by the manufacturer, based on the actual internal volume of the sampler, that indicates a leak of less than 80 mL/min.

(c) Variations of the suggested technique or an alternative external leak test technique may be required for samplers whose design or configuration would make the suggested technique impossible or impractical. The specific proposed external leak test procedure, or particularly an alternative leak test technique, proposed for a particular candidate sampler may be described and submitted to the EPA for specific individual acceptability either as part of a reference or equivalent method application under part 53 of this chapter or in writing in advance of such an intended application under part 53 of this chapter.

7.4.6.2 *Internal, filter bypass leakage.* The sampler shall include an internal, filter bypass leak-check capability consisting of components, accessory hardware, operator interface controls, a written procedure in the Operation/Instruction Manual, and all other necessary functional capability to permit and facilitate the sampler operator to conveniently carry out a test for internal filter bypass leakage in the sampler at a field monitoring site without additional equipment. The purpose of the test is to determine that any portion of the sample flow rate that leaks past the sample filter without passing through the filter is insignificant relative to the design flow rate for the sampler.

(a) The suggested technique for the operator to use for this leak test is as follows:

(1) Carry out an external leak test as provided under section 7.4.6.1 of this appendix which indicates successful passage of the prescribed external leak test.

(2) Install a flow-impervious membrane material in the filter cassette, either with or without a filter, as appropriate, which effectively prevents air flow through the filter.

(3) Use the sampler air pump to draw a partial vacuum in the sampler, downstream of the filter holder assembly, of at least 55 mm Hg (75 cm water column).

(4) Plug the flow system downstream of the filter holder to isolate the components under

vacuum from the pump, such as with a built-in valve.

(5) Stop the pump.

(6) Measure the trapped vacuum in the sampler with a built-in pressure measuring device.

(7) Measure the vacuum in the sampler with the built-in pressure measuring device again at a later time at least 10 minutes after the first pressure measurement.

(8) Remove the flow plug and membrane and restore the sampler to the normal operating configuration.

(b) The associated leak test procedure shall require that for successful passage of this test, the difference between the two pressure measurements shall not be greater than the number of mm of Hg specified for the sampler by the manufacturer, based on the actual internal volume of the portion of the sampler under vacuum, that indicates a leak of less than 80 mL/min.

(c) Variations of the suggested technique or an alternative internal, filter bypass leak test technique may be required for samplers whose design or configuration would make the suggested technique impossible or impractical. The specific proposed internal leak test procedure, or particularly an alternative internal leak test technique proposed for a particular candidate sampler may be described and submitted to the EPA for specific individual acceptability either as part of a reference or equivalent method application under part 53 of this chapter or in writing in advance of such intended application under part 53 of this chapter.

7.4.7 *Range of operational conditions.* The sampler is required to operate properly and meet all requirements specified in this appendix over the following operational ranges.

7.4.7.1 *Ambient temperature.* -30 to =45 °C (Note: Although for practical reasons, the temperature range over which samplers are required to be tested under part 53 of this chapter is -20 to =40 °C, the sampler shall be designed to operate properly over this wider temperature range.).

7.4.7.2 *Ambient relative humidity.* 0 to 100 percent.

7.4.7.3 *Barometric pressure range.* 600 to 800 mm Hg.

7.4.8 *Ambient temperature sensor.* The sampler shall have capability to measure the temperature of the ambient air surrounding the sampler over the range of -30 to =45 °C, with a resolution of 0.1 °C and accuracy of ±2.0 °C, referenced as described in reference 3 in section 13.0 of this appendix, with and without maximum solar insolation.

7.4.8.1 The ambient temperature sensor shall be mounted external to the sampler enclosure and shall have a passive, naturally ventilated sun shield. The sensor shall be located such that the entire sun shield is at least 5 cm above the horizontal plane of the sampler case or enclosure (disregarding the inlet and downtube) and external to the vertical plane of the nearest side or protuberance of the sampler case or enclosure. The maximum temperature measurement error of the ambient temperature measurement system shall be less than 1.6 °C at 1 m/s wind speed and 1000 W/m2 solar radiation intensity.

7.4.8.2 The ambient temperature sensor shall be of such a design and mounted in such a way as to facilitate its convenient dismounting and immersion in a liquid for calibration and comparison to the filter temperature sensor, under section 7.4.11 of this appendix.

7.4.8.3 This ambient temperature measurement shall be updated at least every 30 seconds during both sampling and standby (non-sampling) modes of operation. A visual indication of the current (most recent) value of the ambient temperature measurement, updated at least every 30 seconds, shall be available to the sampler operator during both sampling and standby (non-sampling) modes of operation, as specified in table L–1 of section 7.4.19 of this appendix.

7.4.8.4 This ambient temperature measurement shall be used for the purpose of monitoring filter temperature deviation from ambient temperature, as required by section 7.4.11 of this appendix, and may be used for purposes of effecting filter temperature control, under section 7.4.10 of this appendix, or computation of volumetric flow rate, under sections 7.4.1 to 7.4.5 of this appendix, if appropriate.

7.4.8.5 Following the end of each sample period, the sampler shall report the maximum, minimum, and average temperature for the sample period, as specified in table L–1 of section 7.4.19 of this appendix.

7.4.9 *Ambient barometric sensor.* The sampler shall have capability to measure the barometric pressure of the air surrounding the sampler over a range of 600 to 800 mm Hg referenced as described in reference 3 in section 13.0 of this appendix; also see part 53, subpart E of this chapter. This barometric pressure measurement shall have a resolution of 5 mm Hg and an accuracy of ±10 mm Hg and shall be updated at least every 30 seconds. A visual indication of the value of the current (most recent) barometric pressure measurement, updated at least every 30 seconds, shall be available to the sampler operator during both sampling and standby (non-sampling) modes of operation, as specified in table L–1 of section 7.4.19 of this appendix. This barometric pressure measurement may be used for purposes of computation of volumetric flow rate, under sections 7.4.1 to 7.4.5 of this appendix, if appropriate. Following the end of a sample period, the sampler shall report the maximum, minimum, and mean barometric pressures for the sample period, as specified in table L–1 of section 7.4.19 of this appendix.

7.4.10 *Filter temperature control (sampling and post-sampling).* The sampler shall provide a means to limit the temperature rise of the sample filter (all sample filters for sequential samplers), from insolation and other sources, to no more 5 °C above the temperature of the ambient air surrounding the sampler, during both sampling and post-sampling periods of operation. The post-sampling period is the non-sampling period between the end of the active sampling period and the time of retrieval of the sample filter by the sampler operator.

7.4.11 *Filter temperature sensor(s).*

7.4.11.1 The sampler shall have the capability to monitor the temperature of the sample filter (all sample filters for sequential samplers) over the range of -30 to =45 °C during both sampling and non-sampling periods. While the exact location of this temperature sensor is not explicitly specified, the filter temperature measurement system must demonstrate agreement, within 1 °C, with a test temperature sensor located within 1 cm of the center of the filter downstream of the filter during both sampling and non-sampling modes, as specified in the filter temperature measurement test described in part 53, subpart E of this chapter. This filter temperature measurement shall have a resolution of 0.1 °C and accuracy of ±1.0 °C, referenced as described in reference 3 in section 13.0 of this appendix. This temperature sensor shall be of such a design and mounted in such a way as to facilitate its reasonably convenient dismounting and immersion in a liquid for calibration and comparison to the ambient temperature sensor under section 7.4.8 of this appendix.

7.4.11.2 The filter temperature measurement shall be updated at least every 30 seconds during both sampling and standby (non-sampling) modes of operation. A visual indication of the current (most recent) value of the filter temperature measurement, updated at least every 30 seconds, shall be available to the sampler operator during both sampling and standby (non-sampling) modes of operation, as specified in table L–1 of section 7.4.19 of this appendix.

7.4.11.3 For sequential samplers, the temperature of each filter shall be measured individually unless it can be shown, as specified in the filter temperature measurement test described in §53.57 of this chapter, that the temperature of each filter can be represented by fewer temperature sensors.

7.4.11.4 The sampler shall also provide a warning flag indicator following any occurrence in which the filter temperature (any filter temperature for sequential samplers) exceeds the ambient temperature by more than 5 °C for more than 30 consecutive minutes during either the sampling or post-sampling periods of operation, as specified in table L–1 of section 7.4.19 of this appendix, under section 10.12 of this appendix, regarding sample validity when a warning flag occurs. It is further recommended (not required) that the sampler be capable of recording the maximum differential between the measured filter temperature and the ambient temperature and its time and date of occurrence during both sampling and post-sampling (non-sampling) modes of operation and providing for those data to be accessible to the sampler operator following the end of the sample period, as suggested in table L–1 of section 7.4.19 of this appendix.

7.4.12 *Clock/timer system.*

(a) The sampler shall have a programmable real-time clock timing/control system that:

(1) Is capable of maintaining local time and date, including year, month, day-of-month, hour, minute, and second to an accuracy of ±1.0 minute per month.

(2) Provides a visual indication of the current system time, including year, month, day-of-month, hour, and minute, updated at least each minute, for operator verification.

(3) Provides appropriate operator controls for setting the correct local time and date.

(4) Is capable of starting the sample collection period and sample air flow at a specific, operator-settable time and date, and stopping the sample air flow and terminating the sampler collection period 24 hours (1440 minutes) later, or at a specific, operator-settable time and date.

(b) These start and stop times shall be readily settable by the sampler operator to within ±1.0 minute. The system shall provide a visual indication of the current start and stop time settings, readable to ±1.0 minute, for verification by the operator, and the start and stop times shall also be available via the data output port, as specified in table L–1 of section 7.4.19 of this appendix. Upon execution of a programmed sample period start, the sampler shall automatically reset all sample period information and warning flag indications pertaining to a previous sample period. Refer also to section 7.4.15.4 of this appendix regarding retention of current date and time and programmed start and stop times during a temporary electrical power interruption.

7.4.13 *Sample time determination.* The sampler shall be capable of determining the elapsed sample collection time for each $PM_{2.5}$ sample, accurate to within ±1.0 minute, measured as the time between the start of the sampling period, under section 7.4.12 of this appendix and the termination of the sample period, under section 7.4.12 of this appendix or section 7.4.4 of this appendix. This elapsed sample time shall not include periods when the sampler is inoperative due to a temporary interruption of electrical power, under section 7.4.15.4 of this appendix. In the event that the elapsed sample time determined for the sample period is not within the

range specified for the required sample period in section 3.3 of this appendix, the sampler shall set a warning flag indicator. The date and time of the start of the sample period, the value of the elapsed sample time for the sample period, and the flag indicator status shall be available to the sampler operator following the end of the sample period, as specified in table L–1 of section 7.4.19 of this appendix.

7.4.14 *Outdoor environmental enclosure.* The sampler shall have an outdoor enclosure (or enclosures) suitable to protect the filter and other non-weatherproof components of the sampler from precipitation, wind, dust, extremes of temperature and humidity; to help maintain temperature control of the filter (or filters, for sequential samplers); and to provide reasonable security for sampler components and settings.

7.4.15 *Electrical power supply.*

7.4.15.1 The sampler shall be operable and function as specified herein when operated on an electrical power supply voltage of 105 to 125 volts AC (RMS) at a frequency of 59 to 61 Hz. Optional operation as specified at additional power supply voltages and/or frequencies shall not be precluded by this requirement.

7.4.15.2 The design and construction of the sampler shall comply with all applicable National Electrical Code and Underwriters Laboratories electrical safety requirements.

7.4.15.3 The design of all electrical and electronic controls shall be such as to provide reasonable resistance to interference or malfunction from ordinary or typical levels of stray electromagnetic fields (EMF) as may be found at various monitoring sites and from typical levels of electrical transients or electronic noise as may often or occasionally be present on various electrical power lines.

7.4.15.4 In the event of temporary loss of electrical supply power to the sampler, the sampler shall not be required to sample or provide other specified functions during such loss of power, except that the internal clock/timer system shall maintain its local time and date setting within ±1 minute per week, and the sampler shall retain all other time and programmable settings and all data required to be available to the sampler operator following each sample period for at least 7 days without electrical supply power. When electrical power is absent at the operator-set time for starting a sample period or is interrupted during a sample period, the sampler shall automatically start or resume sampling when electrical power is restored, if such restoration of power occurs before the operator-set stop time for the sample period.

7.4.15.5 The sampler shall have the capability to record and retain a record of the year, month, day-of-month, hour, and minute of the start of each power interruption of more than 1 minute duration, up to 10 such power interruptions per sample period. (More than 10 such power interruptions shall invalidate the sample, except where an exceedance is measured, under section 3.3 of this appendix.) The sampler shall provide for these power interruption data to be available to the sampler operator following the end of the sample period, as specified in table L–1 of section 7.4.19 of this appendix.

7.4.16 *Control devices and operator interface.* The sampler shall have mechanical, electrical, or electronic controls, control devices, electrical or electronic circuits as necessary to provide the timing, flow rate measurement and control, temperature control, data storage and computation, operator interface, and other functions specified. Operator-accessible controls, data displays, and interface devices shall be designed to be simple, straightforward, reliable, and easy to learn, read, and operate under field conditions. The sampler shall have provision for operator input and storage of up to 64 characters of numeric (or alphanumeric) data for purposes of site, sampler, and sample identification. This information shall be available to the sampler operator for verification and change and for output via the data output port along with other data following the end of a sample period, as specified in table L–1 of section 7.4.19 of this appendix. All data required to be available to the operator following a sample collection period or obtained during standby mode in a post-sampling period shall be retained by the sampler until reset, either manually by the operator or automatically by the sampler upon initiation of a new sample collection period.

7.4.17 *Data output port requirement.* The sampler shall have a standard RS–232C data output connection through which digital data may be exported to an external data storage or transmission device. All information which is required to be available at the end of each sample period shall be accessible through this data output connection. The information that shall be accessible though this output port is summarized in table L–1 of section 7.4.19 of this appendix. Since no specific format for the output data is provided, the sampler manufacturer or vendor shall make available to sampler purchasers appropriate computer software capable of receiving exported sampler data and correctly translating the data into a standard spreadsheet format and optionally any other formats as may be useful to sampler users. This requirement shall not preclude the sampler from offering other types of output connections in addition to the required RS–232C port.

7.4.18 *Operation/instruction manual.* The sampler shall include an associated comprehensive operation or instruction manual, as required by part 53 of this chapter, which includes detailed operating instructions on

the setup, operation, calibration, and maintenance of the sampler. This manual shall provide complete and detailed descriptions of the operational and calibration procedures prescribed for field use of the sampler and all instruments utilized as part of this reference method. The manual shall include adequate warning of potential safety hazards that may result from normal use or malfunction of the method and a description of necessary safety precautions. The manual shall also include a clear description of all procedures pertaining to installation, operation, periodic and corrective maintenance, and troubleshooting, and shall include parts identification diagrams.

7.4.19 *Data reporting requirements.* The various information that the sampler is required to provide and how it is to be provided is summarized in the following table L–1.

TABLE L–1—SUMMARY OF INFORMATION TO BE PROVIDED BY THE SAMPLER

Information to be provided	Appendix L section reference	Availability				Format	
		Anytime[1]	End of period[2]	Visual display[3]	Data output[4]	Digital reading[5]	Units
Flow rate, 30-second maximum interval.	7.4.5.1	✔		✔	*	XX.X	L/min
Flow rate, average for the sample period.	7.4.5.2	*	✔	*	✔	XX.X	L/min
Flow rate, CV, for sample period.	7.4.5.2	*	✔	*	✔■	XX.X	%
Flow rate, 5-min. average out of spec. (FLAG[6]).	7.4.5.2	✔	✔	✔	✔■	On/Off	
Sample volume, total.	7.4.5.2	*	✔	✔	✔■	XX.X	m^3
Temperature, ambient, 30-second interval.	7.4.8	✔		✔		XX.X	°C
Temperature, ambient, min., max., average for the sample period.	7.4.8	*	✔	✔	✔■	XX.X	°C
Baro pressure, ambient, 30-second interval.	7.4.9	✔		✔		XXX	mm Hg
Baro pressure, ambient, min., max., average for the sample period.	7.4.9	*	✔	✔	✔■	XXX	mm Hg
Filter temperature, 30-second interval.	7.4.11	✔		✔		XX.X	°C
Filter temperature differential, 30-second interval, out of spec. (FLAG[6]).	7.4.11	*	✔	✔	✔■	On/Off	
Filter temperature, maximum differential from ambient, date, time of occurrence.	7.4.11	*	*	*	*	X.X, YY/MM/DD HH:mm.	°C, Yr./Mon./Day Hrs. min
Date and time	7.4.12	✔		✔		YY/MM/DD HH:mm.	Yr./Mon./Day Hrs. min
Sample start and stop time settings.	7.4.12	✔	✔	✔	✔	YY/MM/DD HH:mm.	Yr./Mon./Day Hrs. min
Sample period start time.	7.4.12		✔	✔	✔■	YYYY/MM/DD HH:mm.	Yr./Mon./Day Hrs. min
Elapsed sample time.	7.4.13	*	✔	✔	✔■	HH:mm	Hrs. min

TABLE L–1—SUMMARY OF INFORMATION TO BE PROVIDED BY THE SAMPLER—Continued

Information to be provided	Appendix L section reference	Availability				Format	
		Anytime[1]	End of period[2]	Visual display[3]	Data output[4]	Digital reading[5]	Units
Elapsed sample time, out of spec. (FLAG[6]).	7.4.13	.....	✔	✔	✔■	On/Off	
Power interruptions ≦1 min., start time of first 10.	7.4.15.5	*	✔	*	✔	1HH:mm, 2HH:mm, etc	Hrs. min
User-entered information, such as sampler and site identification.	7.4.16	✔	✔	✔	✔■	As entered	

✔ Provision of this information is required.
*Provision of this information is optional. If information related to the entire sample period is optionally provided prior to the end of the sample period, the value provided should be the value calculated for the portion of the sampler period completed up to the time the information is provided.
■ Indicates that this information is also required to be provided to the AIRS data bank; see §§58.26 and 58.35 of this chapter.

[1] Information is required to be available to the operator at any time the sampler is operating, whether sampling or not.
[2] Information relates to the entire sampler period and must be provided following the end of the sample period until reset manually by the operator or automatically by the sampler upon the start of a new sample period.
[3] Information shall be available to the operator visually.
[4] Information is to be available as digital data at the sampler's data output port specified in section 7.4.16 of this appendix following the end of the sample period until reset manually by the operator or automatically by the sampler upon the start of a new sample period.
[5] Digital readings, both visual and data output, shall have not less than the number of significant digits and resolution specified.
[6] Flag warnings may be displayed to the operator by a single-flag indicator or each flag may be displayed individually. Only a set (on) flag warning must be indicated; an off (unset) flag may be indicated by the absence of a flag warning. Sampler users should refer to section 10.12 of this appendix regarding the validity of samples for which the sampler provided an associated flag warning.

8.0 *Filter Weighing.* See reference 2 in section 13.0 of this appendix, for additional, more detailed guidance.

8.1 *Analytical balance.* The analytical balance used to weigh filters must be suitable for weighing the type and size of filters specified, under section 6.0 of this appendix, and have a readability of ±1 µg. The balance shall be calibrated as specified by the manufacturer at installation and recalibrated immediately prior to each weighing session. See reference 2 in section 13.0 of this appendix for additional guidance.

8.2 *Filter conditioning.* All sample filters used shall be conditioned immediately before both the pre- and post-sampling weighings as specified below. See reference 2 in section 13.0 of this appendix for additional guidance.

8.2.1 *Mean temperature.* 20 - 23 °C.

8.2.2 *Temperature control.* ±2 °C over 24 hours.

8.2.3 *Mean humidity.* Generally, 30–40 percent relative humidity; however, where it can be shown that the mean ambient relative humidity during sampling is less than 30 percent, conditioning is permissible at a mean relative humidity within ±5 relative humidity percent of the mean ambient relative humidity during sampling, but not less than 20 percent.

8.2.4 *Humidity control.* ±5 relative humidity percent over 24 hours.

8.2.5 *Conditioning time.* Not less than 24 hours.

8.3 *Weighing procedure.*

8.3.1 New filters should be placed in the conditioning environment immediately upon arrival and stored there until the pre-sampling weighing. See reference 2 in section 13.0 of this appendix for additional guidance.

8.3.2 The analytical balance shall be located in the same controlled environment in which the filters are conditioned. The filters shall be weighed immediately following the conditioning period without intermediate or transient exposure to other conditions or environments.

8.3.3 Filters must be conditioned at the same conditions (humidity within ±5 relative humidity percent) before both the pre- and post-sampling weighings.

8.3.4 Both the pre- and post-sampling weighings should be carried out on the same analytical balance, using an effective technique to neutralize static charges on the filter, under reference 2 in section 13.0 of this appendix. If possible, both weighings should be carried out by the same analyst.

8.3.5 The pre-sampling (tare) weighing shall be within 30 days of the sampling period.

8.3.6 The post-sampling conditioning and weighing shall be completed within 240 hours (10 days) after the end of the sample period, unless the filter sample is maintained at 4 °C

or less during the entire time between retrieval from the sampler and the start of the conditioning, in which case the period shall not exceed 30 days. Reference 2 in section 13.0 of this appendix has additional guidance on transport of cooled filters.

8.3.7 *Filter blanks.*

8.3.7.1 New field blank filters shall be weighed along with the pre-sampling (tare) weighing of each lot of $PM_{2.5}$ filters. These blank filters shall be transported to the sampling site, installed in the sampler, retrieved from the sampler without sampling, and reweighed as a quality control check.

8.3.7.2 New laboratory blank filters shall be weighed along with the pre-sampling (tare) weighing of each set of $PM_{2.5}$ filters. These laboratory blank filters should remain in the laboratory in protective containers during the field sampling and should be reweighed as a quality control check.

8.3.8 Additional guidance for proper filter weighing and related quality assurance activities is provided in reference 2 in section 13.0 of this appendix.

9.0 *Calibration.* Reference 2 in section 13.0 of this appendix contains additional guidance.

9.1 *General requirements.*

9.1.1 Multipoint calibration and single-point verification of the sampler's flow rate measurement device must be performed periodically to establish and maintain traceability of subsequent flow measurements to a flow rate standard.

9.1.2 An authoritative flow rate standard shall be used for calibrating or verifying the sampler's flow rate measurement device with an accuracy of ±2 percent. The flow rate standard shall be a separate, stand-alone device designed to connect to the flow rate measurement adapter, Figure L–30 of this appendix. This flow rate standard must have its own certification and be traceable to a National Institute of Standards and Technology (NIST) primary standard for volume or flow rate. If adjustments to the sampler's flow rate measurement system calibration are to be made in conjunction with an audit of the sampler's flow measurement system, such adjustments shall be made following the audit. Reference 2 in section 13.0 of this appendix contains additional guidance.

9.1.3 The sampler's flow rate measurement device shall be re-calibrated after electromechanical maintenance or transport of the sampler.

9.2 *Flow rate calibration/verification procedure.*

9.2.1 $PM_{2.5}$ samplers may employ various types of flow control and flow measurement devices. The specific procedure used for calibration or verification of the flow rate measurement device will vary depending on the type of flow rate controller and flow rate measurement employed. Calibration shall be in terms of actual ambient volumetric flow rates (Q^a), measured at the sampler's inlet downtube. The generic procedure given here serves to illustrate the general steps involved in the calibration of a $PM_{2.5}$ sampler. The sampler operation/instruction manual required under section 7.4.18 of this appendix and the Quality Assurance Handbook in reference 2 in section 13.0 of this appendix provide more specific and detailed guidance for calibration.

9.2.2 The flow rate standard used for flow rate calibration shall have its own certification and be traceable to a NIST primary standard for volume or flow rate. A calibration relationship for the flow rate standard, e.g., an equation, curve, or family of curves relating actual flow rate (Q_a) to the flow rate indicator reading, shall be established that is accurate to within 2 percent over the expected range of ambient temperatures and pressures at which the flow rate standard may be used. The flow rate standard must be re-calibrated or re-verified at least annually.

9.2.3 The sampler flow rate measurement device shall be calibrated or verified by removing the sampler inlet and connecting the flow rate standard to the sampler's downtube in accordance with the operation/instruction manual, such that the flow rate standard accurately measures the sampler's flow rate. The sampler operator shall first carry out a sampler leak check and confirm that the sampler passes the leak test and then verify that no leaks exist between the flow rate standard and the sampler.

9.2.4 The calibration relationship between the flow rate (in actual L/min) indicated by the flow rate standard and by the sampler's flow rate measurement device shall be established or verified in accordance with the sampler operation/instruction manual. Temperature and pressure corrections to the flow rate indicated by the flow rate standard may be required for certain types of flow rate standards. Calibration of the sampler's flow rate measurement device shall consist of at least three separate flow rate measurements (multipoint calibration) evenly spaced within the range of -10 percent to =10 percent of the sampler's operational flow rate, section 7.4.1 of this appendix. Verification of the sampler's flow rate shall consist of one flow rate measurement at the sampler's operational flow rate. The sampler operation/instruction manual and reference 2 in section 13.0 of this appendix provide additional guidance.

9.2.5 If during a flow rate verification the reading of the sampler's flow rate indicator or measurement device differs by ± 4 percent or more from the flow rate measured by the flow rate standard, a new multipoint calibration shall be performed and the flow rate verification must then be repeated.

9.2.6 Following the calibration or verification, the flow rate standard shall be removed from the sampler and the sampler inlet shall be reinstalled. Then the sampler's

normal operating flow rate (in L/min) shall be determined with a clean filter in place. If the flow rate indicated by the sampler differs by ±2 percent or more from the required sampler flow rate, the sampler flow rate must be adjusted to the required flow rate, under section 7.4.1 of this appendix.

9.3 Periodic calibration or verification of the calibration of the sampler's ambient temperature, filter temperature, and barometric pressure measurement systems is also required. Reference 3 of section 13.0 of this appendix contains additional guidance.

10.0 *$PM_{2.5}$ Measurement Procedure.* The detailed procedure for obtaining valid $PM_{2.5}$ measurements with each specific sampler designated as part of a reference method for $PM_{2.5}$ under part 53 of this chapter shall be provided in the sampler-specific operation or instruction manual required by section 7.4.18 of this appendix. Supplemental guidance is provided in section 2.12 of the Quality Assurance Handbook listed in reference 2 in section 13.0 of this appendix. The generic procedure given here serves to illustrate the general steps involved in the $PM_{2.5}$ sample collection and measurement, using a $PM_{2.5}$ reference method sampler.

10.1 The sampler shall be set up, calibrated, and operated in accordance with the specific, detailed guidance provided in the specific sampler's operation or instruction manual and in accordance with a specific quality assurance program developed and established by the user, based on applicable supplementary guidance provided in reference 2 in section 13.0 of this appendix.

10.2 Each new sample filter shall be inspected for correct type and size and for pinholes, particles, and other imperfections. Unacceptable filters should be discarded. A unique identification number shall be assigned to each filter, and an information record shall be established for each filter. If the filter identification number is not or cannot be marked directly on the filter, alternative means, such as a number-identified storage container, must be established to maintain positive filter identification.

10.3 Each filter shall be conditioned in the conditioning environment in accordance with the requirements specified in section 8.2 of this appendix.

10.4 Following conditioning, each filter shall be weighed in accordance with the requirements specified in section 8.0 of this appendix and the presampling weight recorded with the filter identification number.

10.5 A numbered and preweighed filter shall be installed in the sampler following the instructions provided in the sampler operation or instruction manual.

10.6 The sampler shall be checked and prepared for sample collection in accordance with instructions provided in the sampler operation or instruction manual and with the specific quality assurance program established for the sampler by the user.

10.7 The sampler's timer shall be set to start the sample collection at the beginning of the desired sample period and stop the sample collection 24 hours later.

10.8 Information related to the sample collection (site location or identification number, sample date, filter identification number, and sampler model and serial number) shall be recorded and, if appropriate, entered into the sampler.

10.9 The sampler shall be allowed to collect the $PM_{2.5}$ sample during the set 24-hour time period.

10.10 Within 96 hours of the end of the sample collection period, the filter, while still contained in the filter cassette, shall be carefully removed from the sampler, following the procedure provided in the sampler operation or instruction manual and the quality assurance program, and placed in a protective container. The protective container shall contain no loose material that could be transferred to the filter. The protective container shall hold the filter cassette securely such that the cover shall not come in contact with the filter's surfaces. Reference 2 in section 13.0 of this appendix contains additional information.

10.11 The total sample volume in actual m^3 for the sampling period and the elapsed sample time shall be obtained from the sampler and recorded in accordance with the instructions provided in the sampler operation or instruction manual. All sampler warning flag indications and other information required by the local quality assurance program shall also be recorded.

10.12 All factors related to the validity or representativeness of the sample, such as sampler tampering or malfunctions, unusual meteorological conditions, construction activity, fires or dust storms, etc. shall be recorded as required by the local quality assurance program. The occurrence of a flag warning during a sample period shall not necessarily indicate an invalid sample but rather shall indicate the need for specific review of the QC data by a quality assurance officer to determine sample validity.

10.13 After retrieval from the sampler, the exposed filter containing the $PM_{2.5}$ sample should be transported to the filter conditioning environment as soon as possible ideally to arrive at the conditioning environment within 24 hours for conditioning and subsequent weighing. During the period between filter retrieval from the sampler and the start of the conditioning, the filter shall be maintained as cool as practical and continuously protected from exposure to temperatures over 25 °C. See section 8.3.6 of this appendix regarding time limits for completing the post-sampling weighing. See reference 2 in section 13.0 of this appendix for additional guidance on transporting filter

samplers to the conditioning and weighing laboratory.

10.14. The exposed filter containing the $PM_{2.5}$ sample shall be re-conditioned in the conditioning environment in accordance with the requirements specified in section 8.2 of this appendix.

10.15. The filter shall be reweighed immediately after conditioning in accordance with the requirements specified in section 8.0 of this appendix, and the postsampling weight shall be recorded with the filter identification number.

10.16 The $PM_{2.5}$ concentration shall be calculated as specified in section 12.0 of this appendix.

11.0 *Sampler Maintenance.* The sampler shall be maintained as described by the sampler's manufacturer in the sampler-specific operation or instruction manual required under section 7.4.18 of this appendix and in accordance with the specific quality assurance program developed and established by the user based on applicable supplementary guidance provided in reference 2 in section 13.0 of this appendix.

12.0 *Calculations*

12.1 (a) The $PM_{2.5}$ concentration is calculated as:

$$PM_{2.5} = (W_f - W_i)/V_a$$

where:

$PM_{2.5}$ = mass concentration of $PM_{2.5}$, $\mu g/m^3$;

W_f, W_i = final and initial weights, respectively, of the filter used to collect the $PM_{2.5}$ particle sample, μg;

V_a = total air volume sampled in actual volume units, as provided by the sampler, m^3.

NOTE: Total sample time must be between 1,380 and 1,500 minutes (23 and 25 hrs) for a fully valid $PM_{2.5}$ sample; however, see also section 3.3 of this appendix.

13.0 *References.*

1. Quality Assurance Handbook for Air Pollution Measurement Systems, Volume I, Principles. EPA/600/R–94/038a, April 1994. Available from CERI, ORD Publications, U.S. Environmental Protection Agency, 26 West Martin Luther King Drive, Cincinnati, Ohio 45268.

2. Copies of section 2.12 of the Quality Assurance Handbook for Air Pollution Measurement Systems, Volume II, Ambient Air Specific Methods, EPA/600/R–94/038b, are available from Department E (MD-77B), U.S. EPA, Research Triangle Park, NC 27711.

3. Quality Assurance Handbook for Air Pollution Measurement Systems, Volume IV: Meteorological Measurements, (Revised Edition) EPA/600/R–94/038d, March, 1995. Available from CERI, ORD Publications, U.S. Environmental Protection Agency, 26 West Martin Luther King Drive, Cincinnati, Ohio 45268.

4. Military standard specification (mil. spec.) 8625F, Type II, Class 1 as listed in Department of Defense Index of Specifications and Standards (DODISS), available from DODSSP–Customer Service, Standardization Documents Order Desk, 700 Robbins Avenue, Building 4D, Philadelphia, PA 1911–5094.

14.0 *Figures L–1 through L–30 to Appendix L.*

FIGURE L-1. PM2.5 SAMPLER, ASSEMBLY

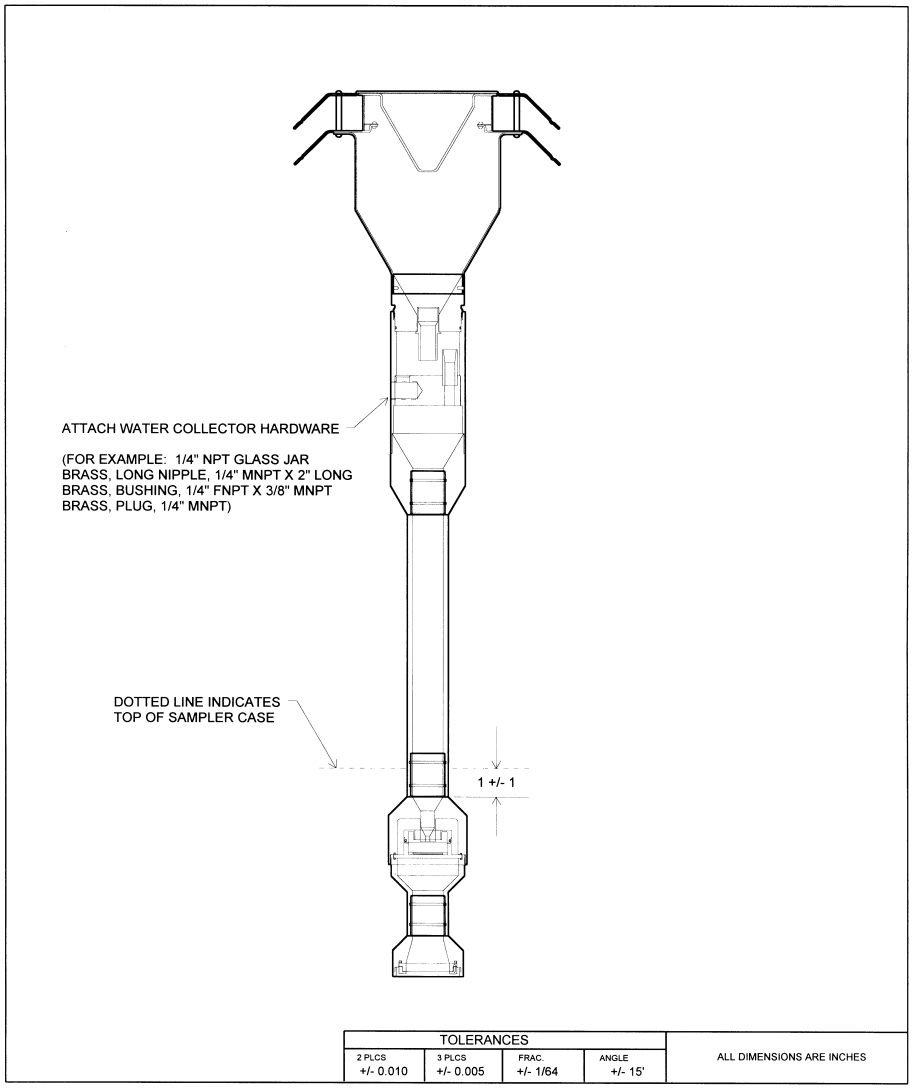

FIGURE L-2. 10-MICRON INLET, ASSEMBLY

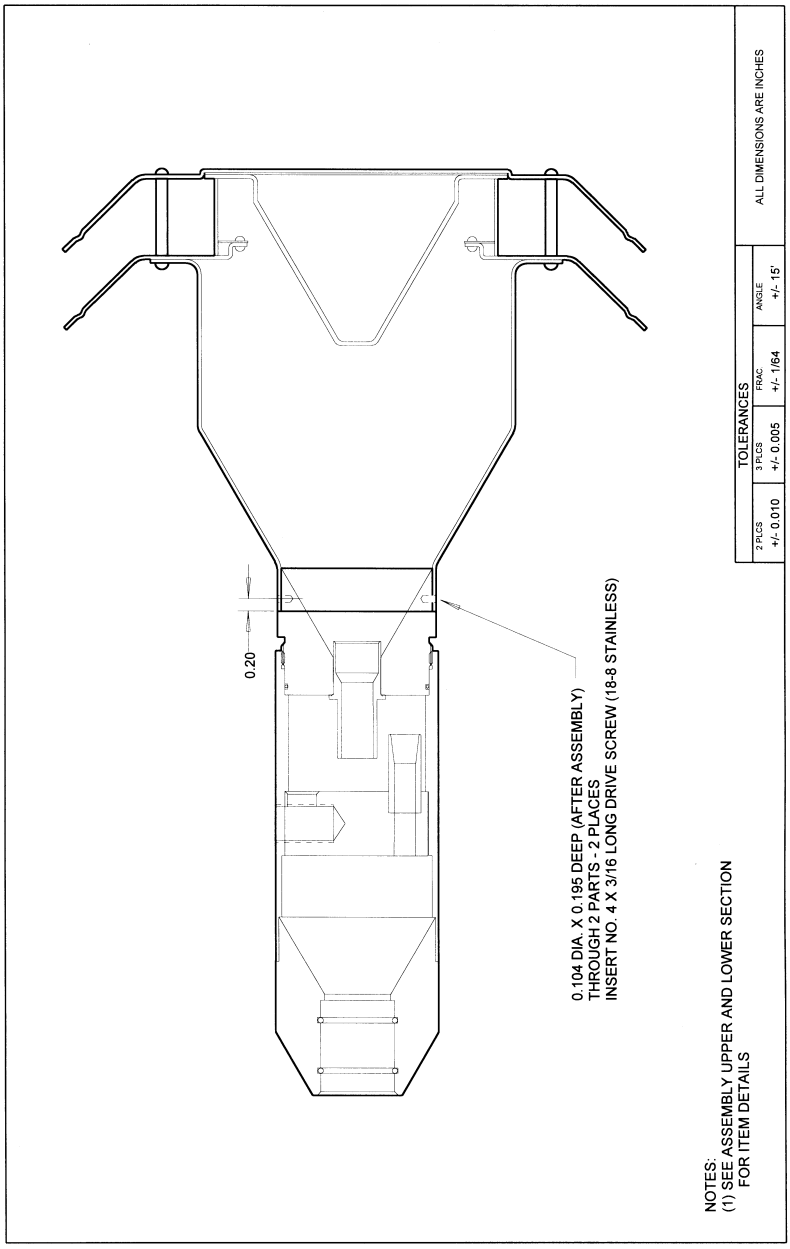

FIGURE L-3. 10-MICRON ASSEMBLY, UPPER SECTION

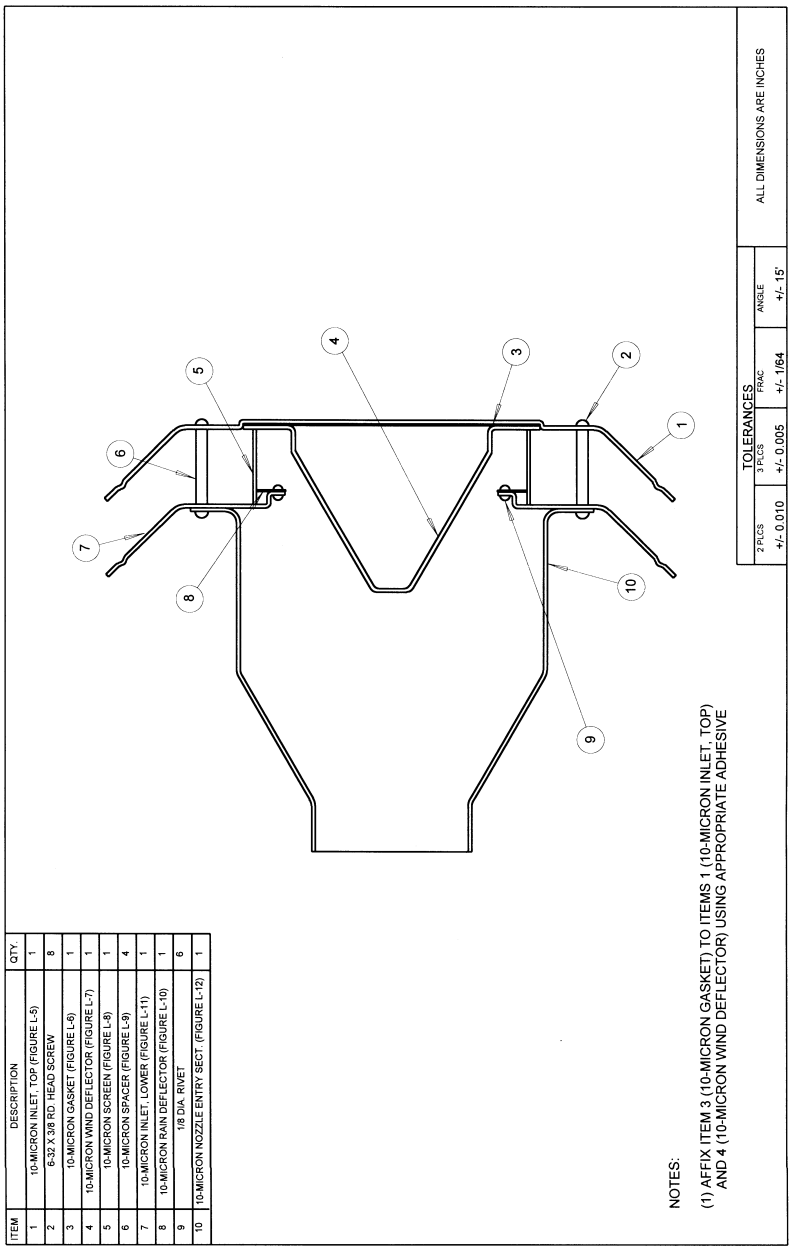

FIGURE L-4. 10-MICRON ASSEMBLY, LOWER SECTION

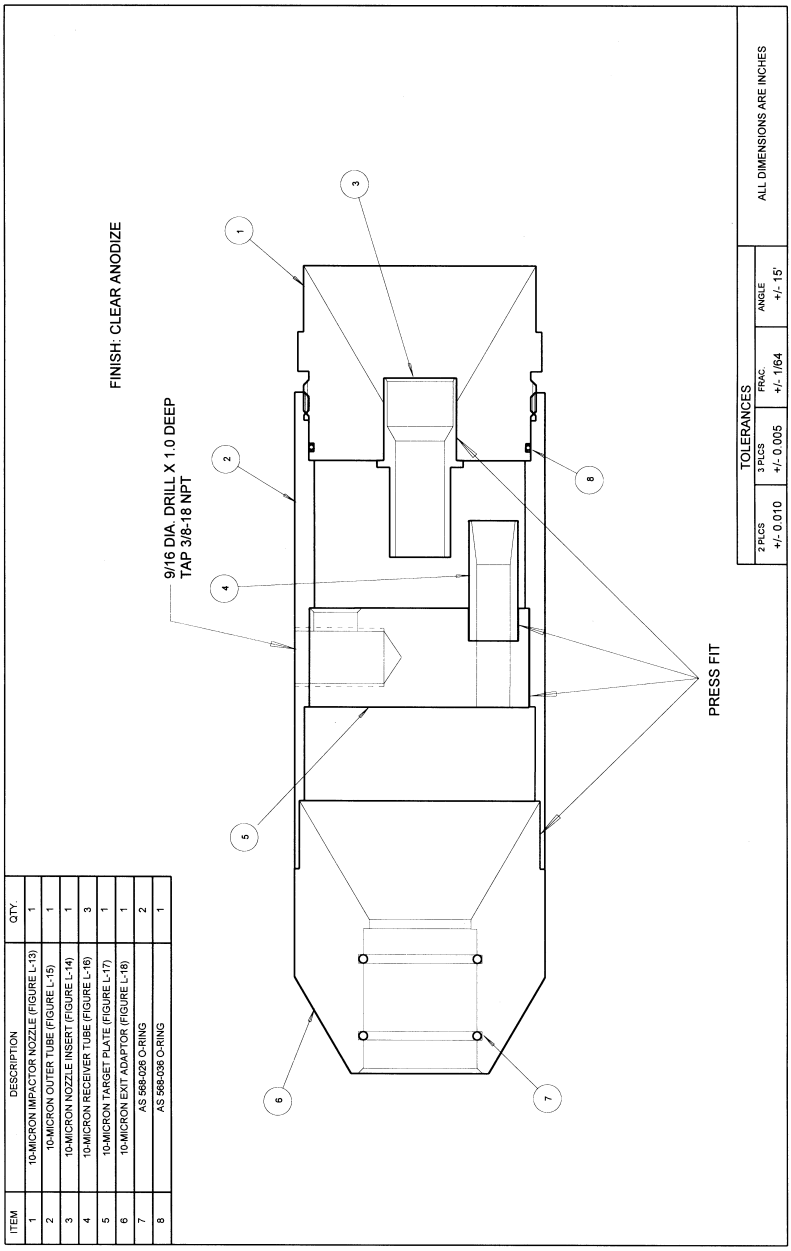

ITEM	DESCRIPTION	QTY.
1	10-MICRON IMPACTOR NOZZLE (FIGURE L-13)	1
2	10-MICRON OUTER TUBE (FIGURE L-15)	1
3	10-MICRON NOZZLE INSERT (FIGURE L-14)	1
4	10-MICRON RECEIVER TUBE (FIGURE L-16)	3
5	10-MICRON TARGET PLATE (FIGURE L-17)	1
6	10-MICRON EXIT ADAPTOR (FIGURE L-18)	1
7	AS 568-026 O-RING	2
8	AS 568-036 O-RING	1

FIGURE L-5. 10-MICRON INLET, TOP

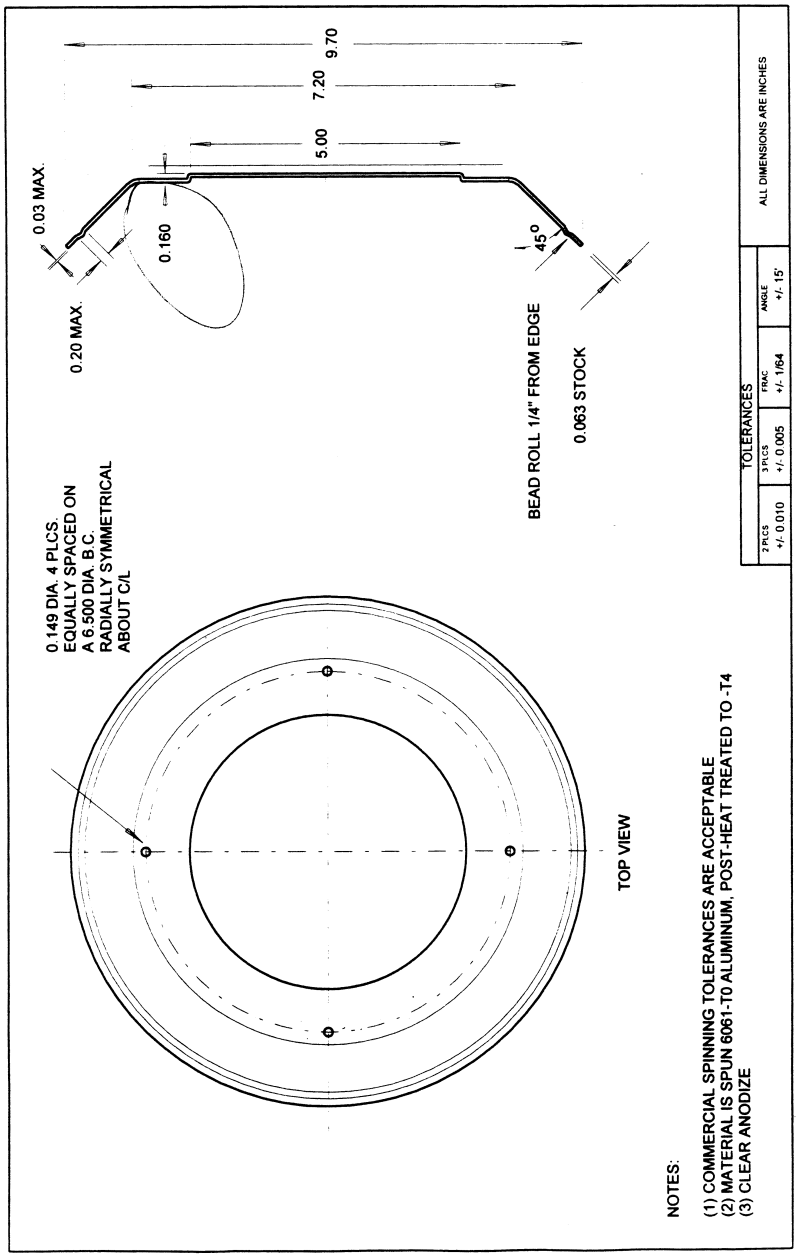

FIGURE L-6. 10-MICRON GASKET

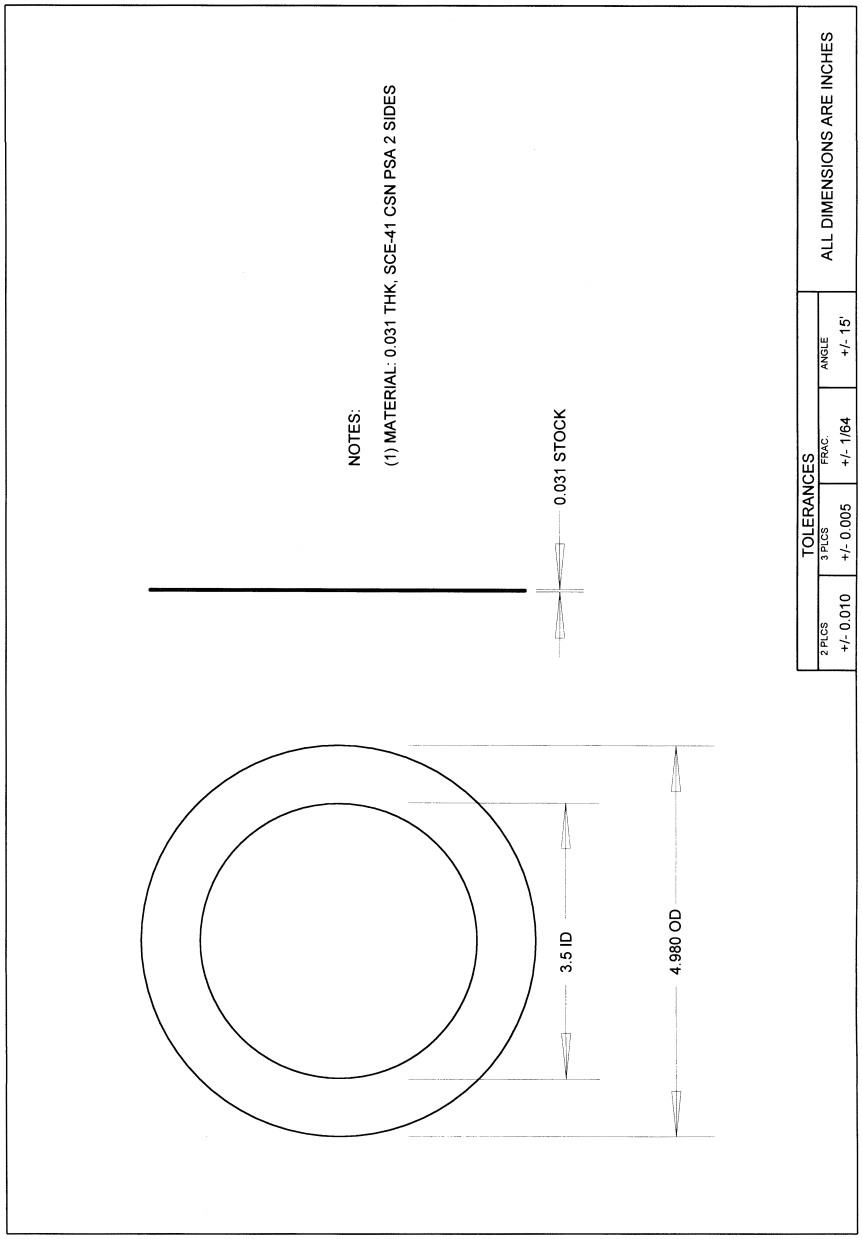

FIGURE L-7. 10-MICRON WIND DEFLECTOR

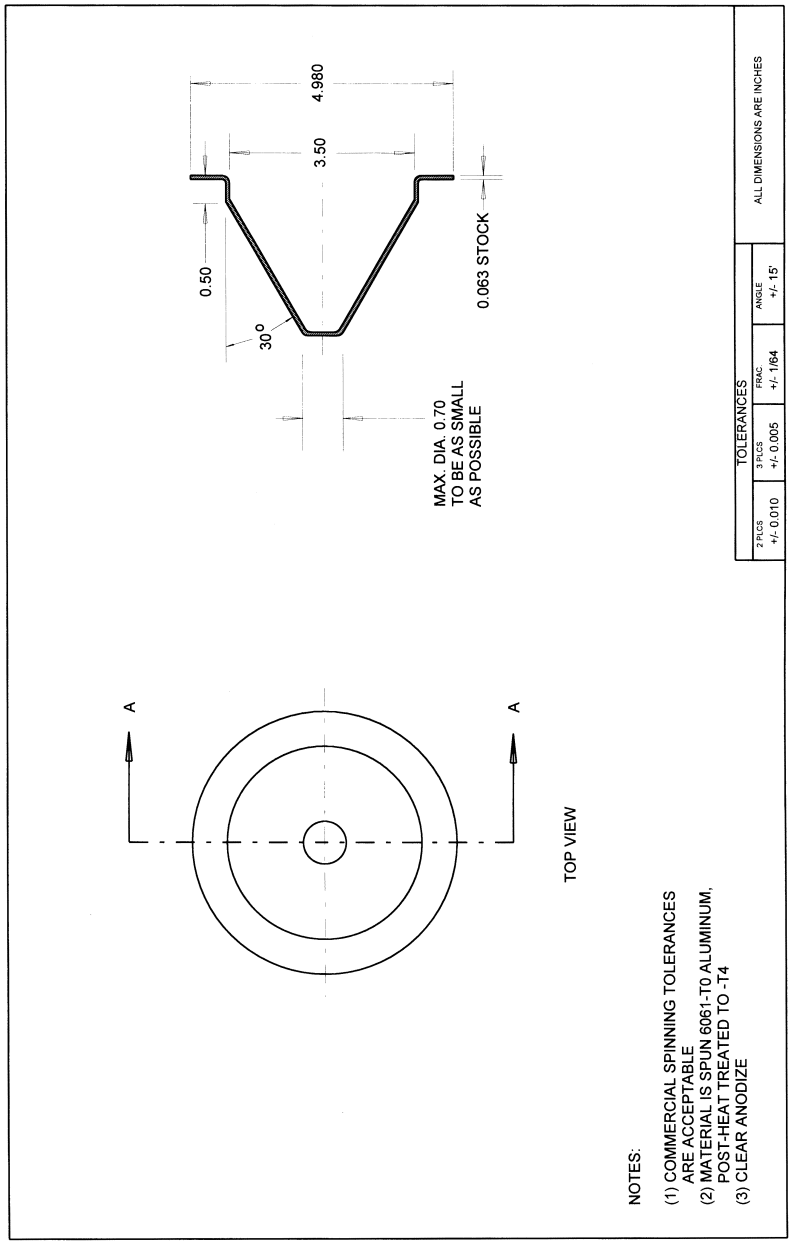

FIGURE L-8. 10-MICRON SCREEN

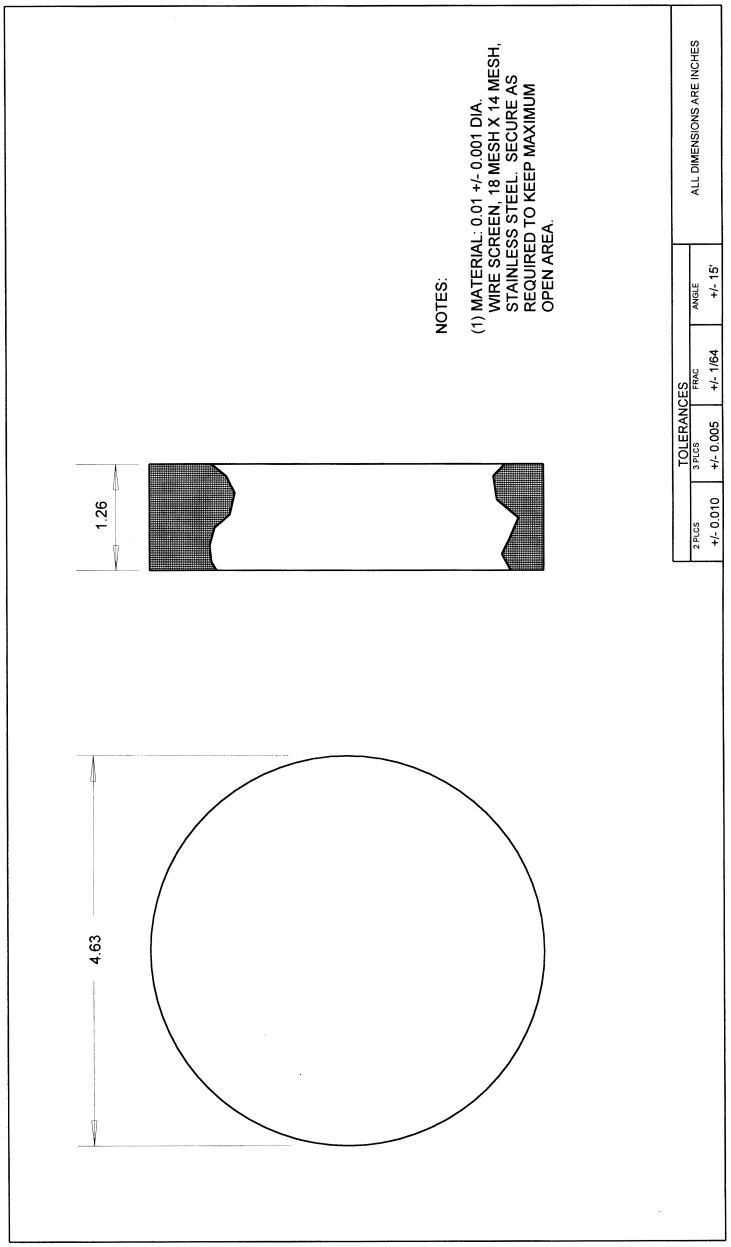

FIGURE L-9. 10-MICRON SPACER

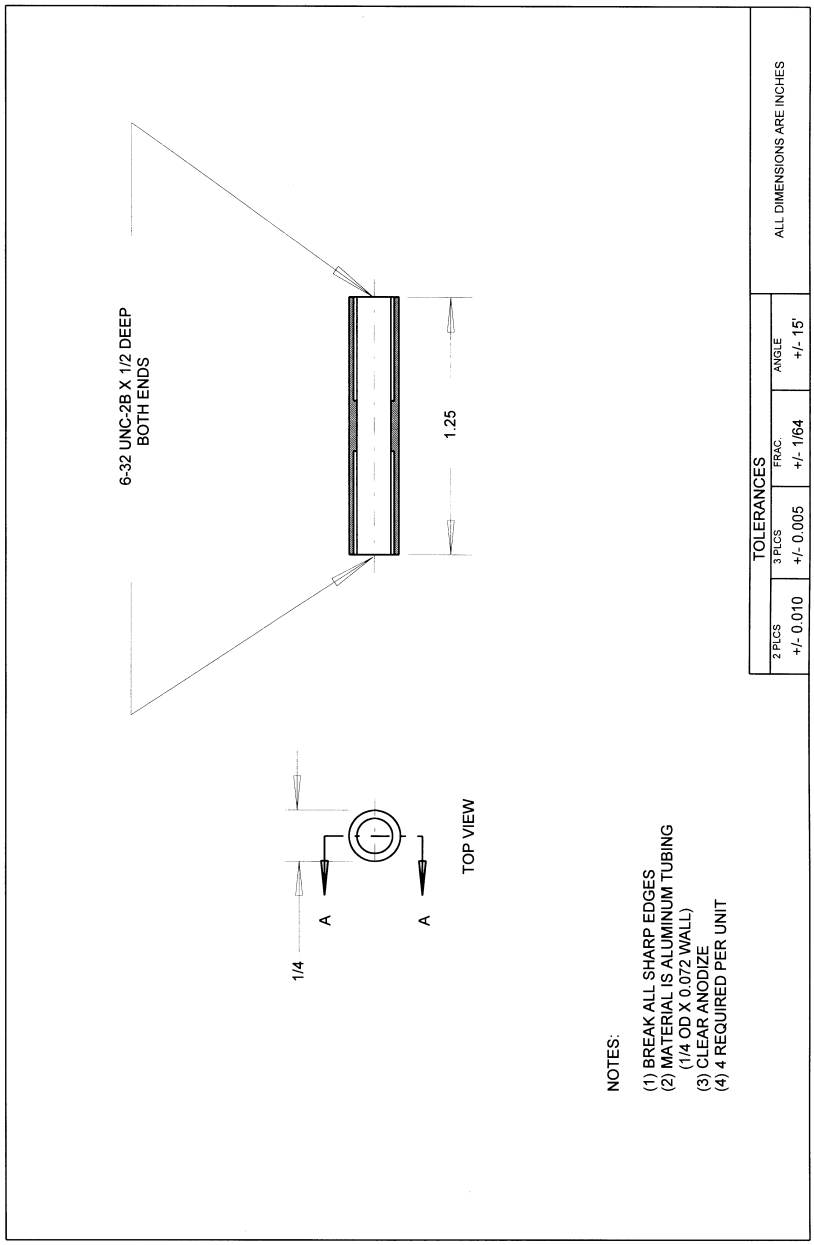

FIGURE L-10. 10-MICRON RAIN DEFLECTOR

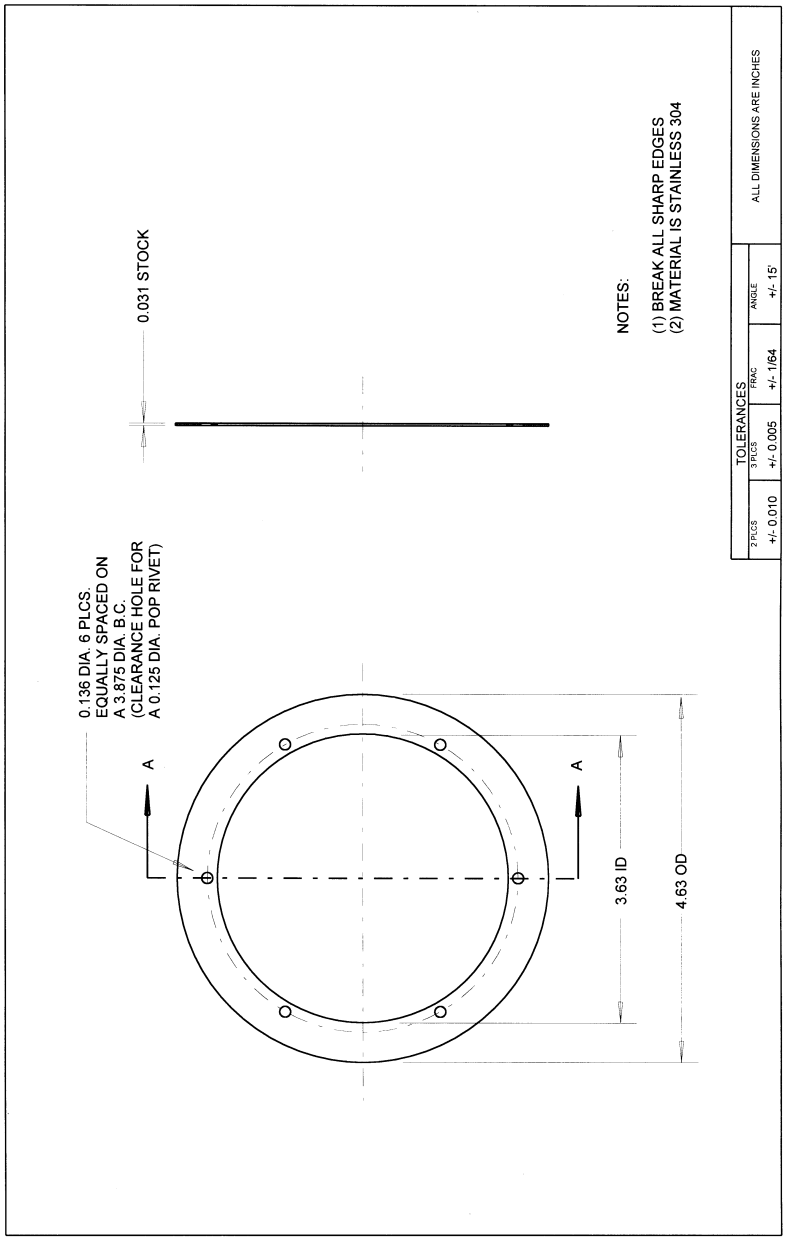

FIGURE L-11. 10-MICRON INLET, LOWER

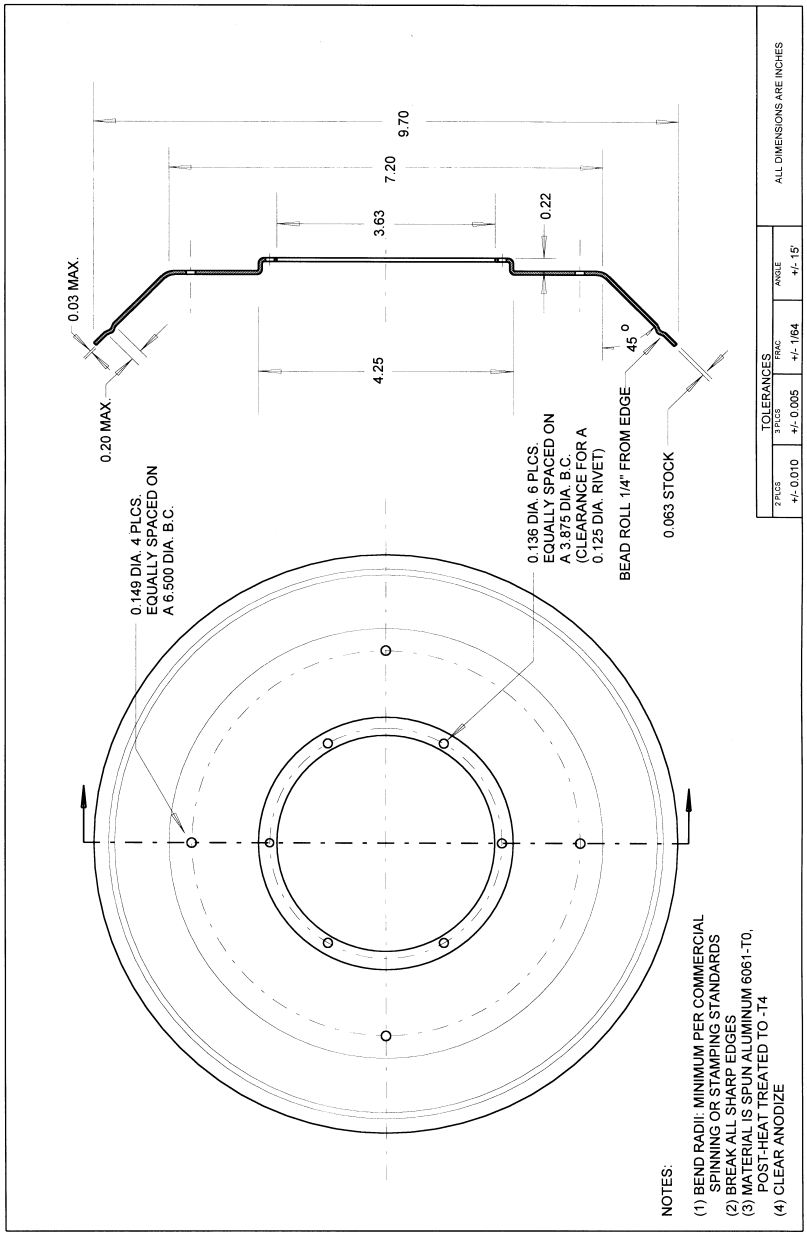

FIGURE L-12. 10-MICRON NOZZLE ENTRY SECTION

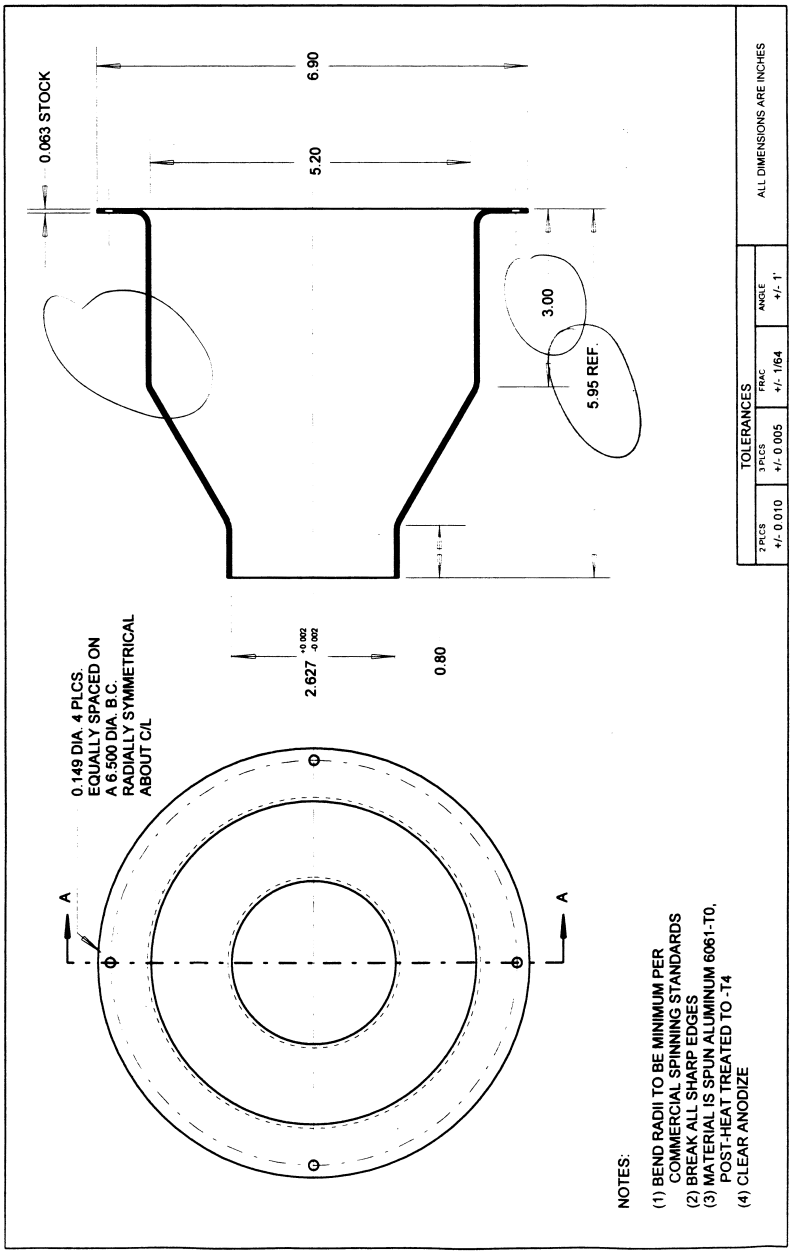

FIGURE L-13. 10-MICRON IMPACTOR NOZZLE

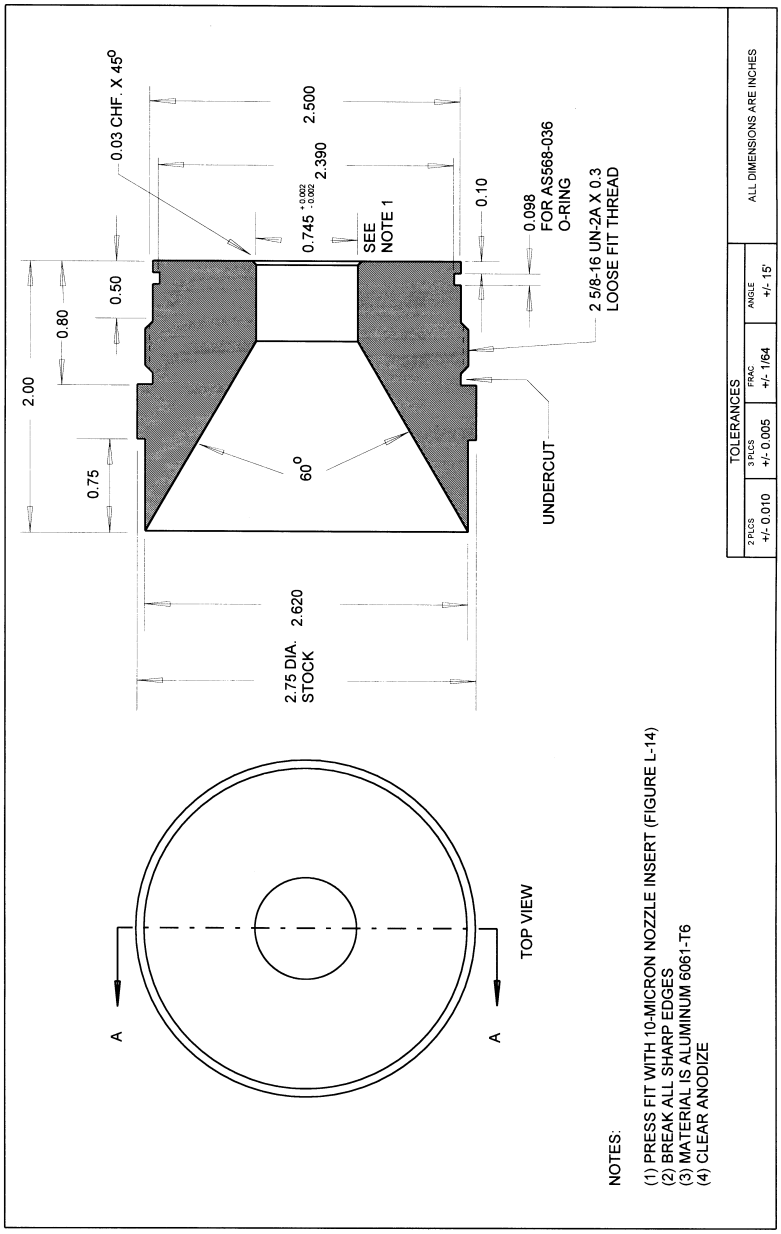

FIGURE L-14. 10-MICRON NOZZLE INSERT

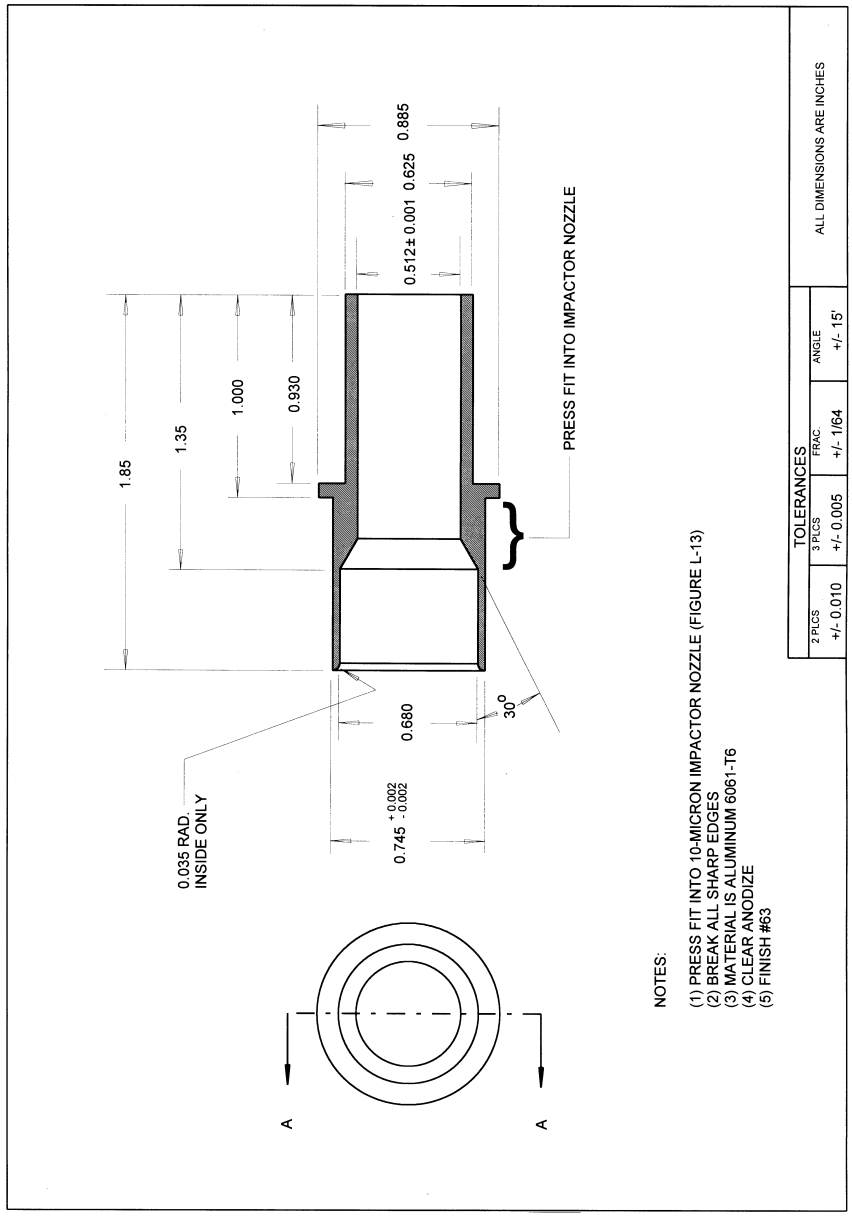

FIGURE L-15. 10-MICRON OUTER TUBE

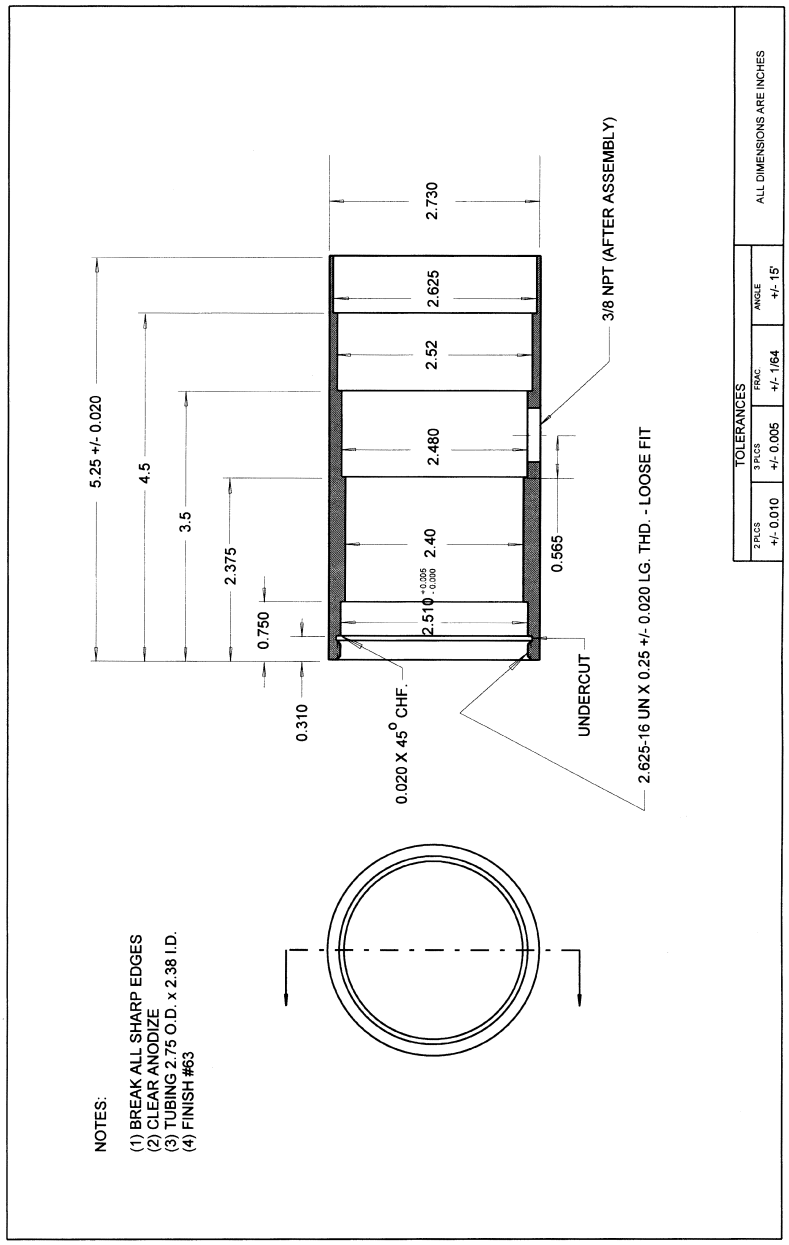

FIGURE L-16. 10-MICRON RECEIVER TUBE

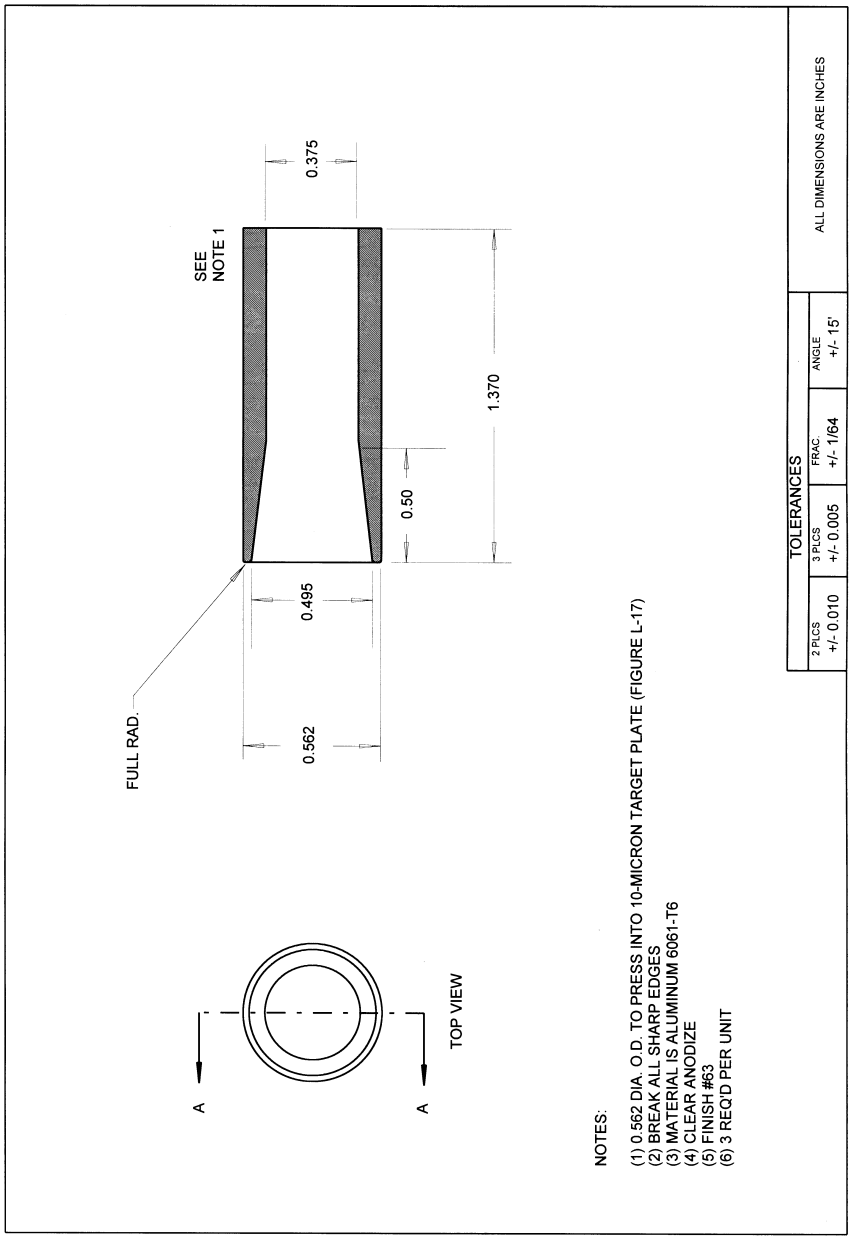

FIGURE L-17. 10-MICRON TARGET PLATE

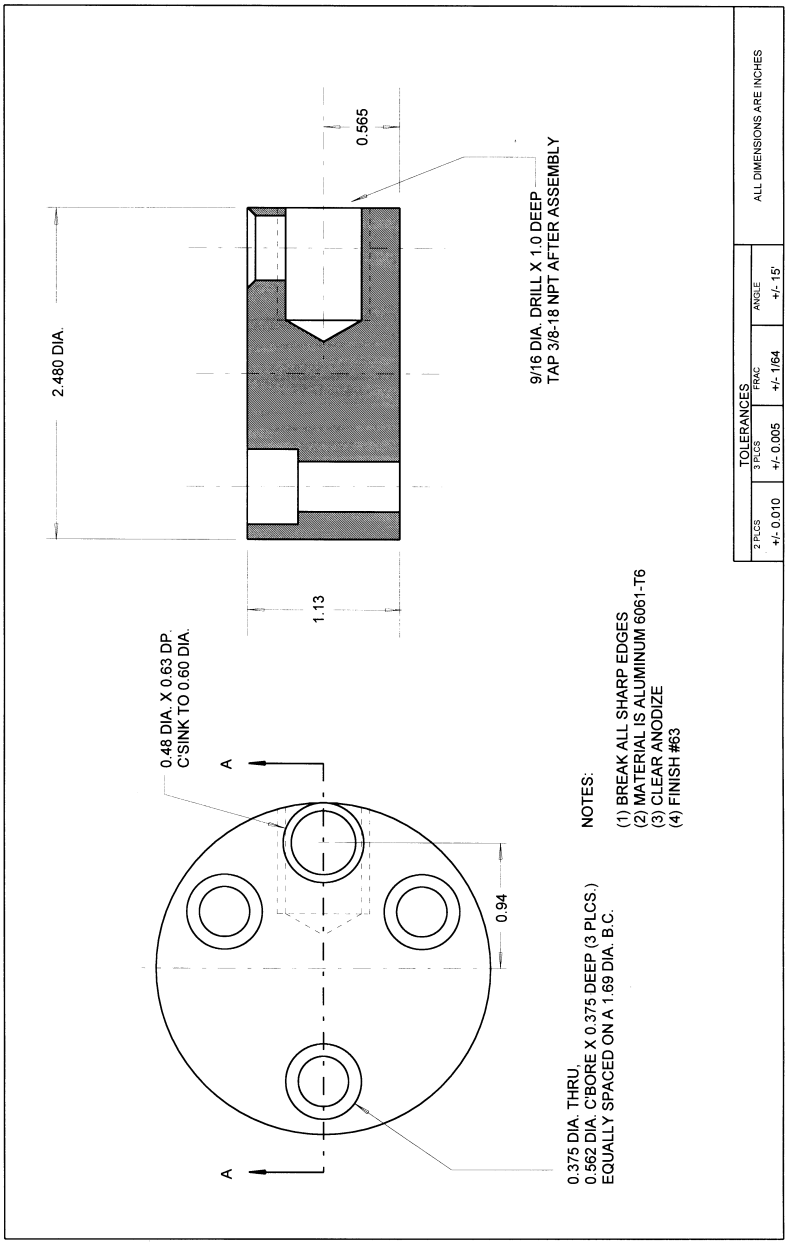

FIGURE L-18. 10-MICRON EXIT ADAPTOR

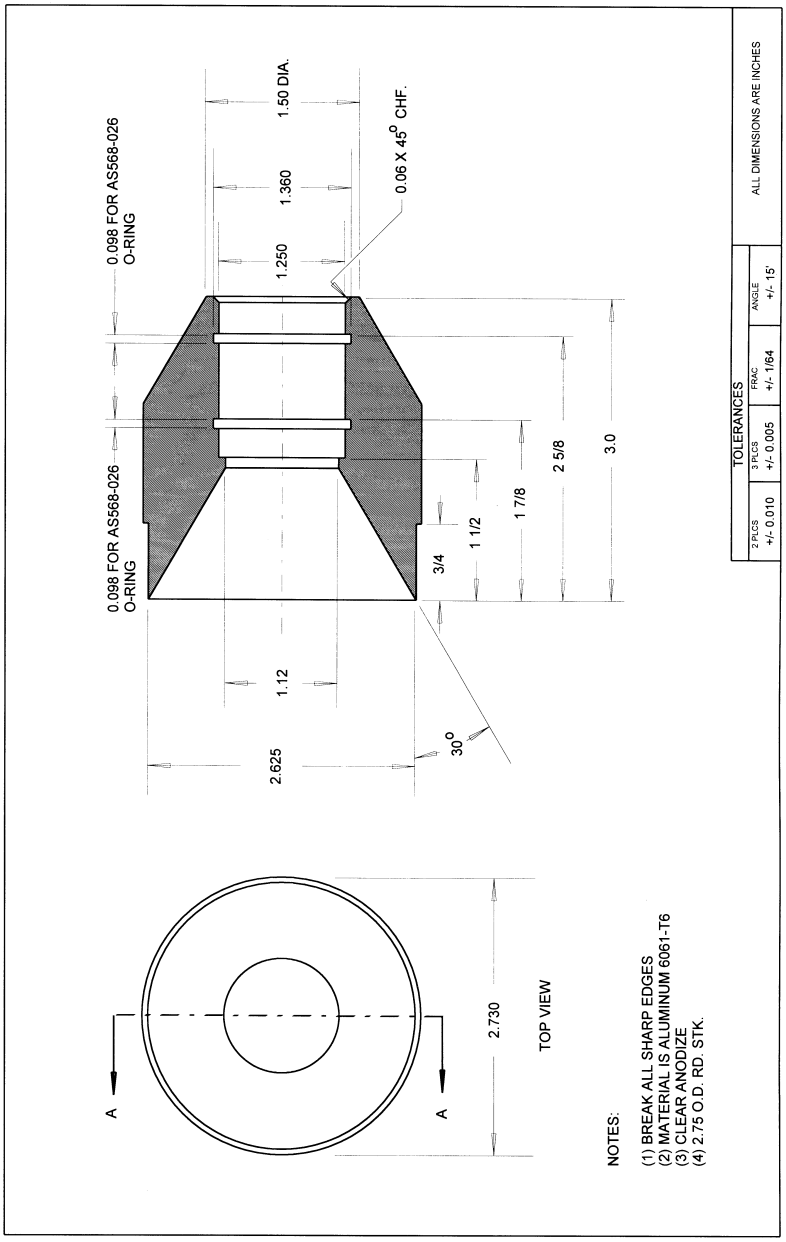

FIGURE L-19. 10-MICRON DOWN TUBE

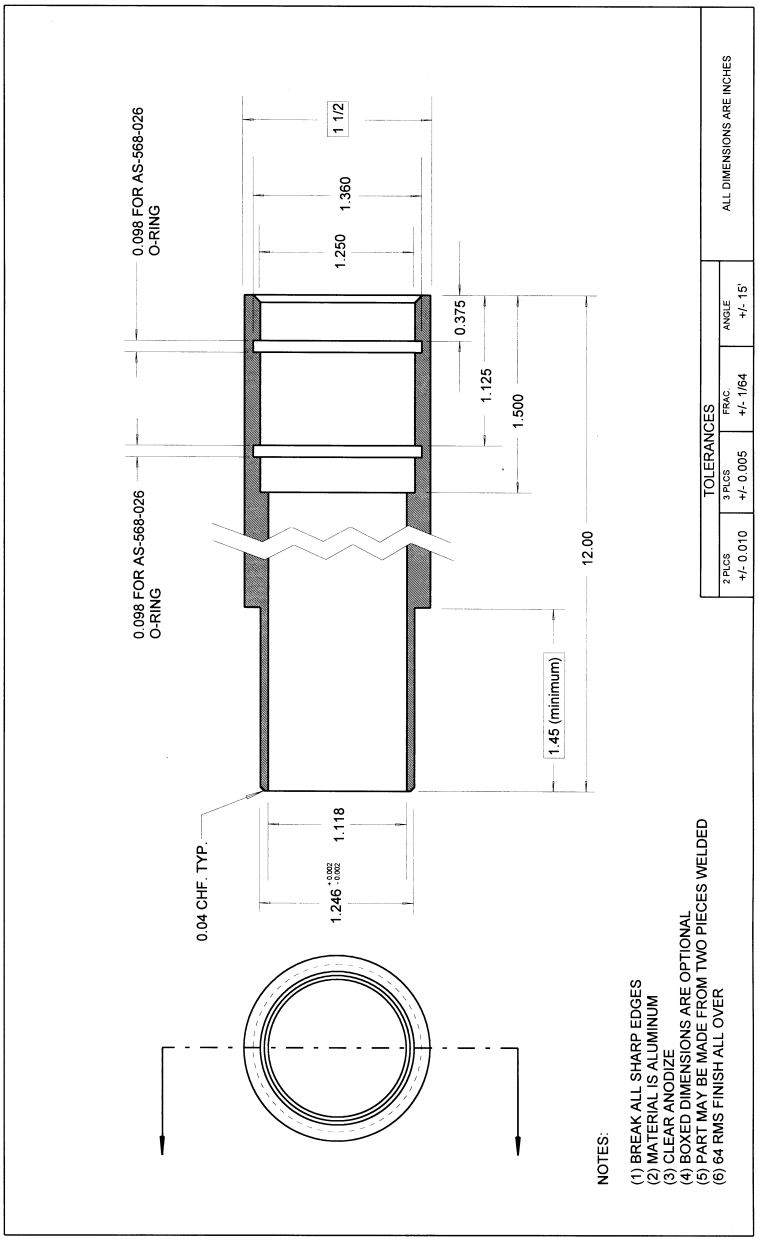

FIGURE L-20. 2.5-MICRON IMPACTOR ASSEMBLY

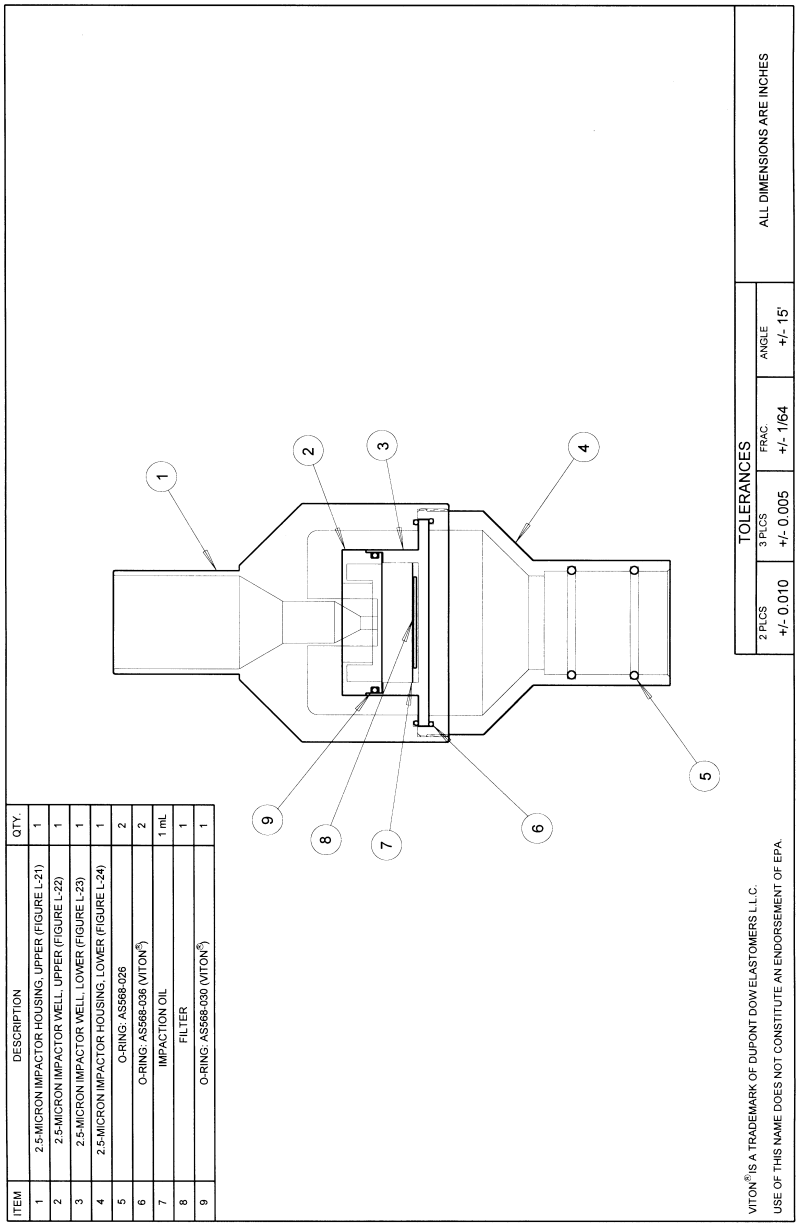

ITEM	DESCRIPTION	QTY.
1	2.5-MICRON IMPACTOR HOUSING, UPPER (FIGURE L-21)	1
2	2.5-MICRON IMPACTOR WELL, UPPER (FIGURE L-22)	1
3	2.5-MICRON IMPACTOR WELL, LOWER (FIGURE L-23)	1
4	2.5-MICRON IMPACTOR HOUSING, LOWER (FIGURE L-24)	1
5	O-RING: AS568-026	2
6	O-RING: AS568-036 (VITON®)	2
7	IMPACTION OIL	1 mL
8	FILTER	1
9	O-RING: AS568-030 (VITON®)	1

FIGURE L-21. 2.5-MICRON IMPACTOR HOUSING, UPPER

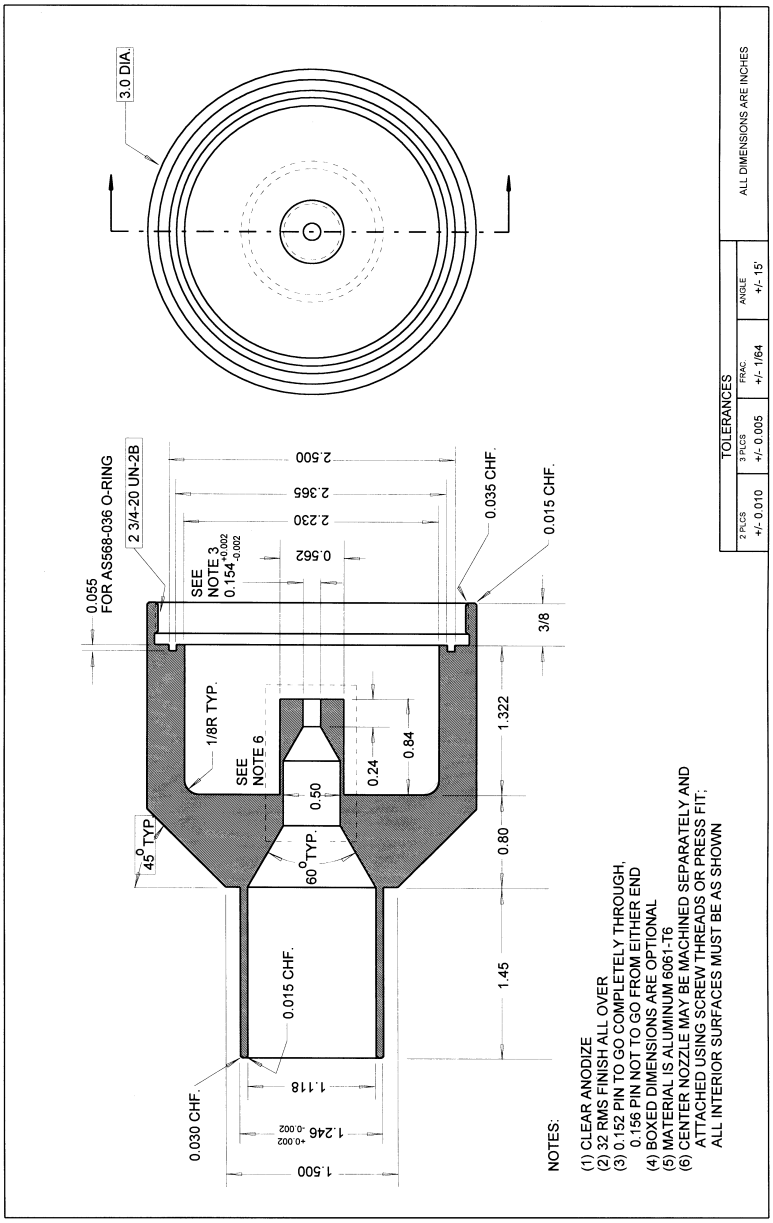

FIGURE L-22. 2.5-MICRON IMPACTOR WELL, UPPER SECTION

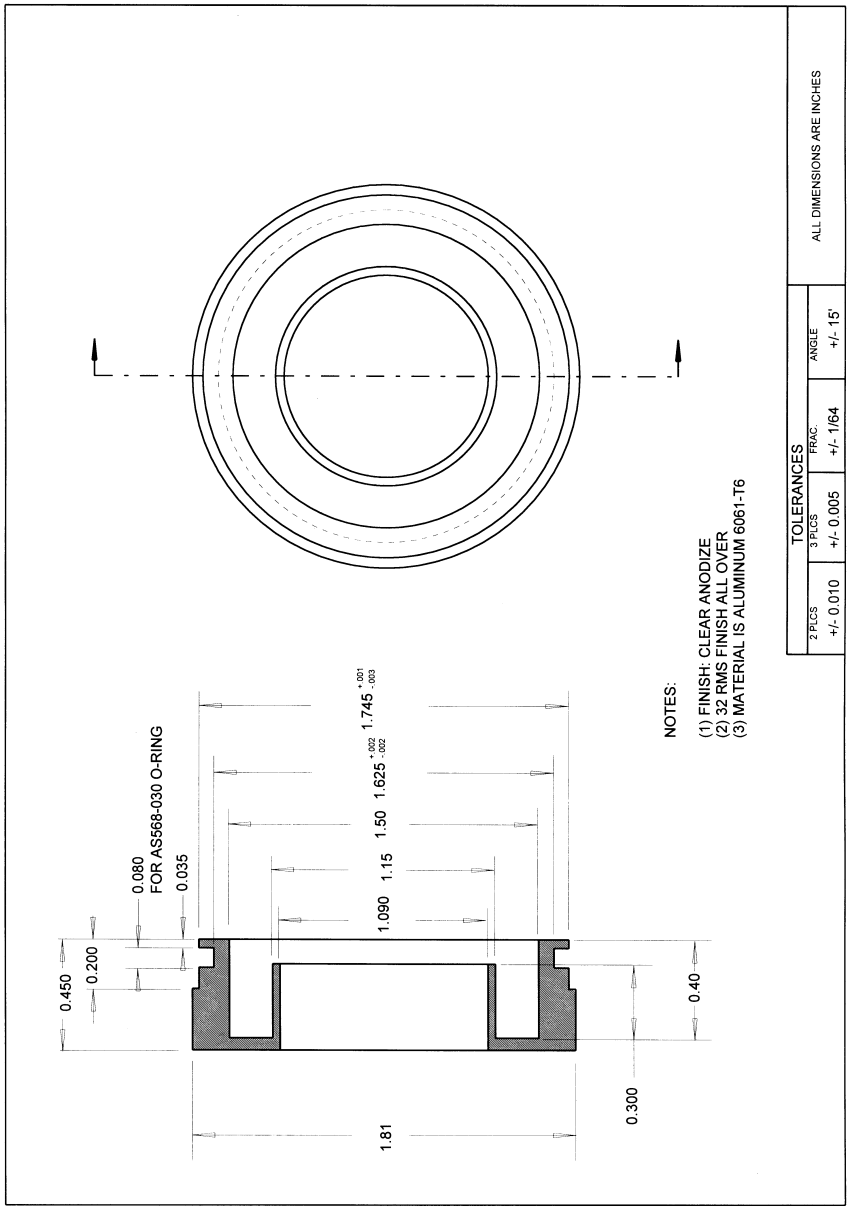

FIGURE L-23. 2.5-MICRON IMPACTOR WELL, LOWER SECTION

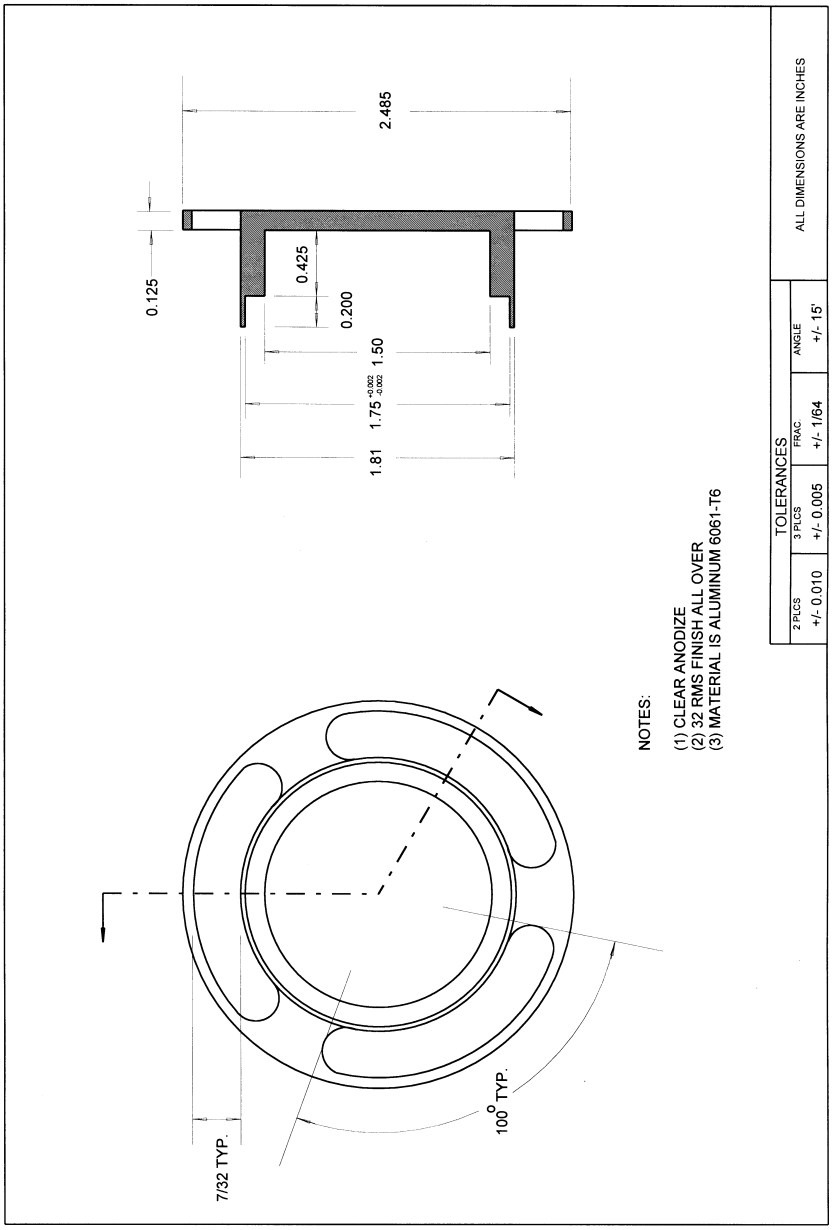

FIGURE L-24. 2.5-MICRON IMPACTOR HOUSING, LOWER

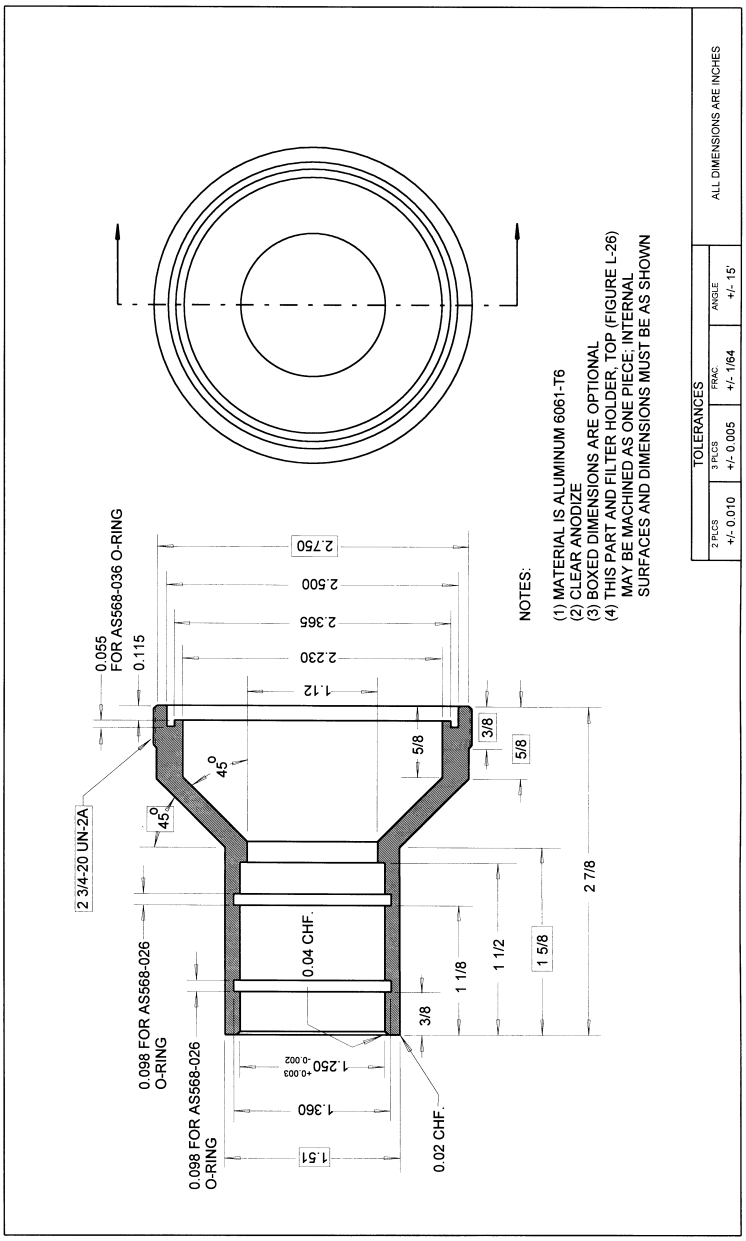

FIGURE L-25. FILTER HOLDER, ASSEMBLY

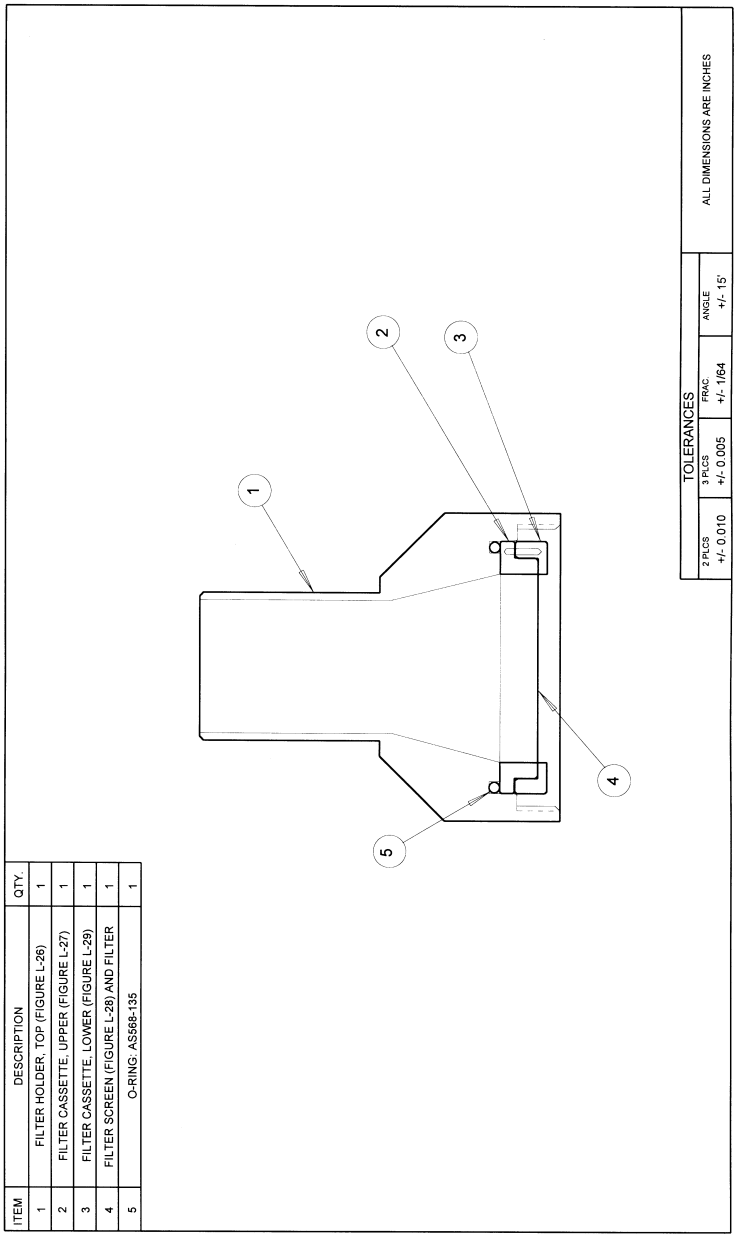

ITEM	DESCRIPTION	QTY.
1	FILTER HOLDER, TOP (FIGURE L-26)	1
2	FILTER CASSETTE, UPPER (FIGURE L-27)	1
3	FILTER CASSETTE, LOWER (FIGURE L-29)	1
4	FILTER SCREEN (FIGURE L-28) AND FILTER	1
5	O-RING: AS568-135	1

FIGURE L-26. FILTER HOLDER, TOP

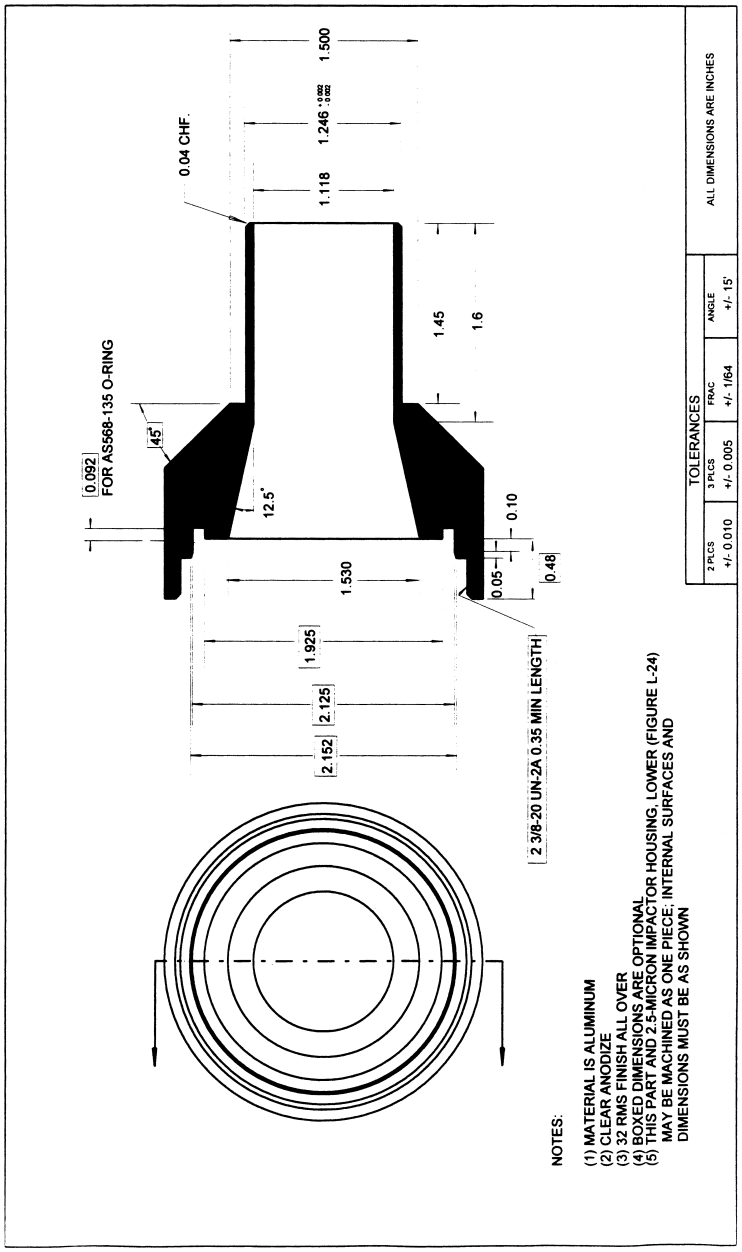

FIGURE L-27. FILTER CASSETTE, UPPER SECTION

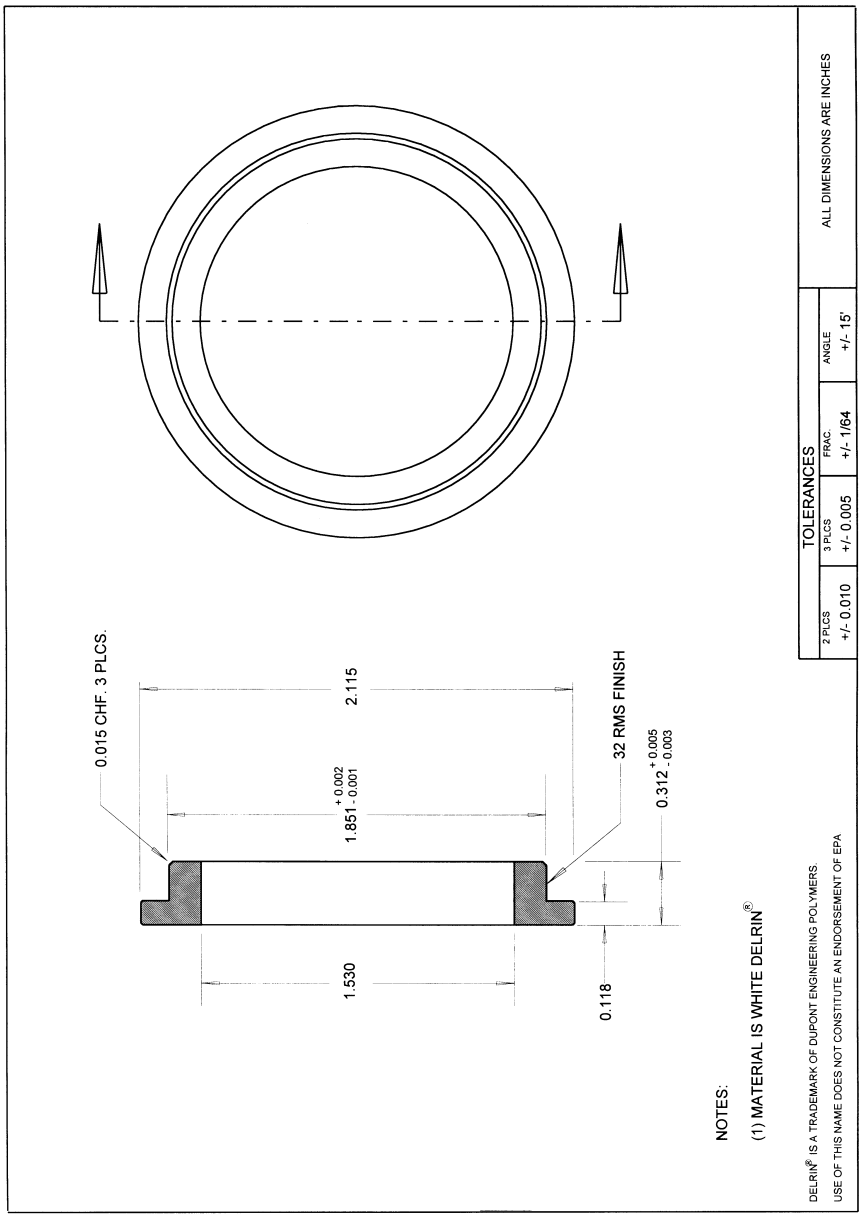

FIGURE L-28. FILTER SCREEN

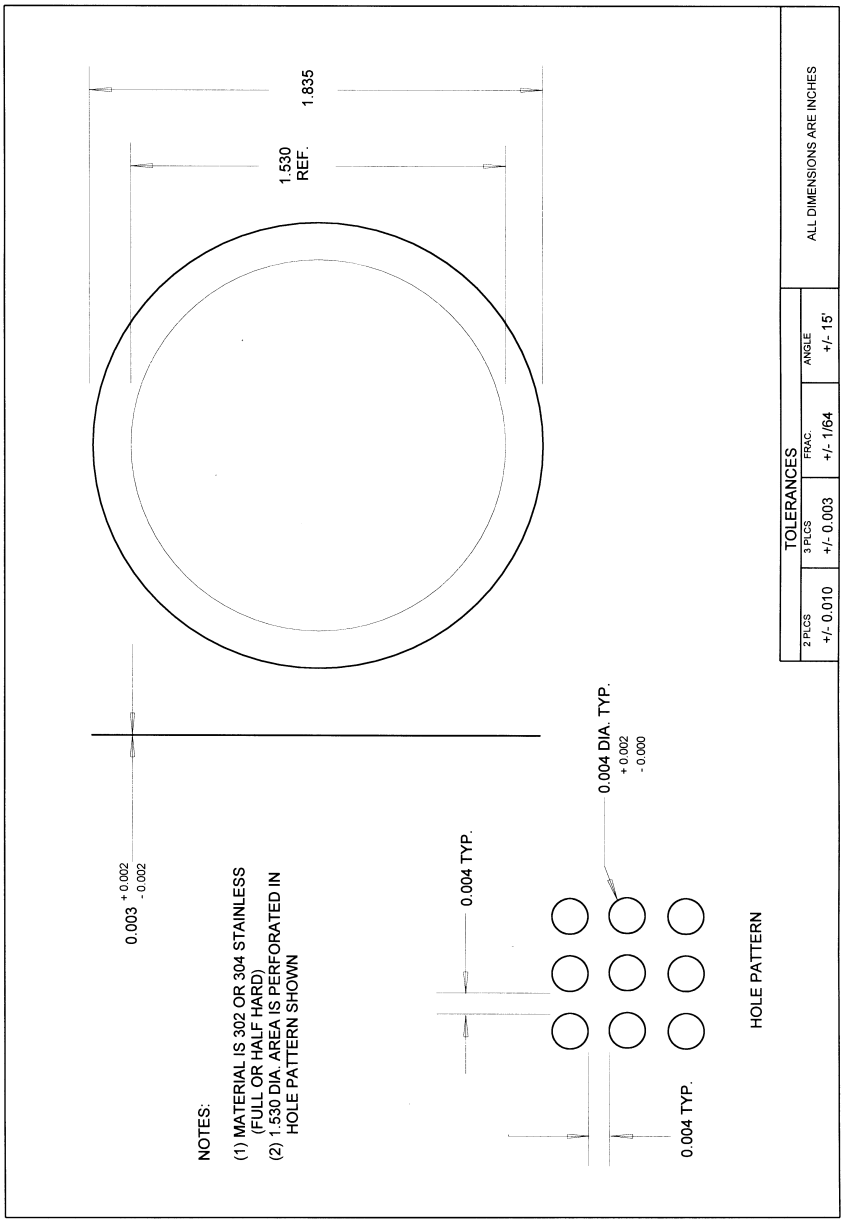

FIGURE L-29. FILTER CASSETTE, LOWER SECTION

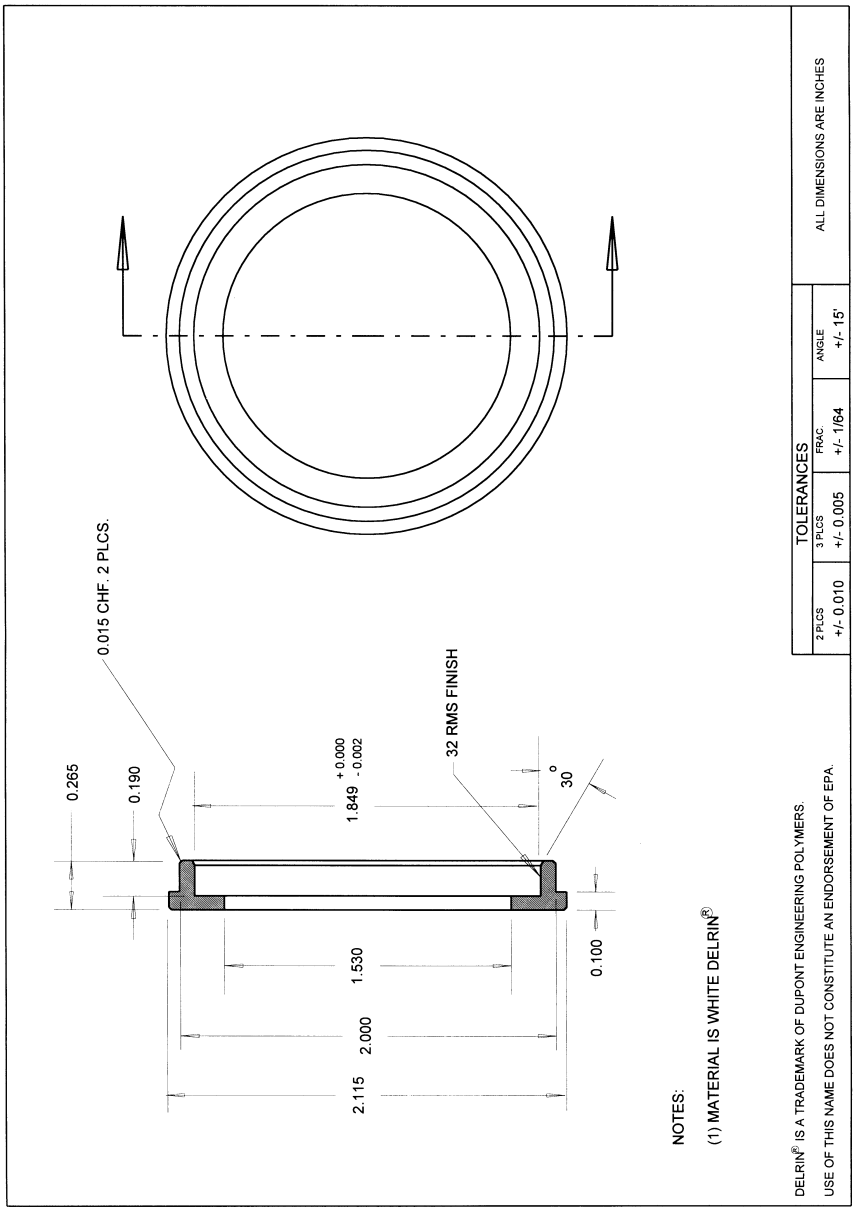

FIGURE L-30. FLOW RATE MEASUREMENT ADAPTER

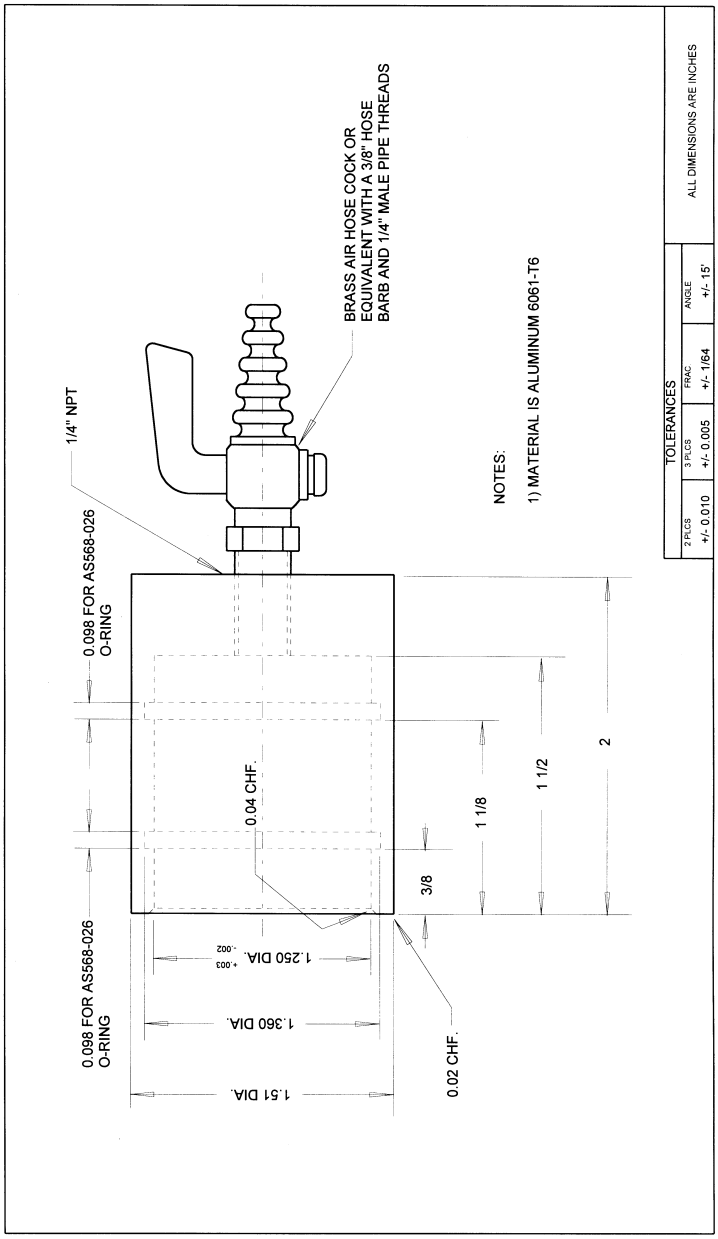

[62 FR 38714, July 18, 1997, as amended at 64 FR 19719, Apr. 22, 1999]

APPENDIX M TO PART 50—REFERENCE METHOD FOR THE DETERMINATION OF PARTICULATE MATTER AS PM_{10} IN THE ATMOSPHERE

1.0 *Applicability.*

1.1 This method provides for the measurement of the mass concentration of particulate matter with an aerodynamic diameter less than or equal to a nominal 10 micrometers (PM_{10}) in ambient air over a 24-hour period for purposes of determining attainment and maintenance of the primary and secondary national ambient air quality standards for particulate matter specified in §50.6 of this chapter. The measurement process is nondestructive, and the PM_{10} sample can be subjected to subsequent physical or chemical analyses. Quality assurance procedures and guidance are provided in part 58, Appendices A and B of this chapter and in references 1 and 2 of section 12.0 of this appendix.

2.0 *Principle.*

2.1 An air sampler draws ambient air at a constant flow rate into a specially shaped inlet where the suspended particulate matter is inertially separated into one or more size fractions within the PM_{10} size range. Each size fraction in the PM_{10} size range is then collected on a separate filter over the specified sampling period. The particle size discrimination characteristics (sampling effectiveness and 50 percent cutpoint) of the sampler inlet are prescribed as performance specifications in part 53 of this chapter.

2.2 Each filter is weighed (after moisture equilibration) before and after use to determine the net weight (mass) gain due to collected PM_{10}. The total volume of air sampled, measured at the actual ambient temperature and pressure, is determined from the measured flow rate and the sampling time. The mass concentration of PM_{10} in the ambient air is computed as the total mass of collected particles in the PM_{10} size range divided by the volume of air sampled, and is expressed in micrograms per actual cubic meter ($\mu g/m^3$).

2.3 A method based on this principle will be considered a reference method only if the associated sampler meets the requirements specified in this appendix and the requirements in part 53 of this chapter, and the method has been designated as a reference method in accordance with part 53 of this chapter.

3.0 *Range.*

3.1 The lower limit of the mass concentration range is determined by the repeatability of filter tare weights, assuming the nominal air sample volume for the sampler. For samplers having an automatic filter-changing mechanism, there may be no upper limit. For samplers that do not have an automatic filter-changing mechanism, the upper limit is determined by the filter mass loading beyond which the sampler no longer maintains the operating flow rate within specified limits due to increased pressure drop across the loaded filter. This upper limit cannot be specified precisely because it is a complex function of the ambient particle size distribution and type, humidity, filter type, and perhaps other factors. Nevertheless, all samplers should be capable of measuring 24-hour PM_{10} mass concentrations of at least 300 $\mu g/m^3$ while maintaining the operating flow rate within the specified limits.

4.0 *Precision.*

4.1 The precision of PM_{10} samplers must be 5 $\mu g/m^3$ for PM_{10} concentrations below 80 $\mu g/m^3$ and 7 percent for PM_{10} concentrations above 80 $\mu g/m^3$, as required by part 53 of this chapter, which prescribes a test procedure that determines the variation in the PM_{10} concentration measurements of identical samplers under typical sampling conditions. Continual assessment of precision via collocated samplers is required by part 58 of this chapter for PM_{10} samplers used in certain monitoring networks.

5.0 *Accuracy.*

5.1 Because the size of the particles making up ambient particulate matter varies over a wide range and the concentration of particles varies with particle size, it is difficult to define the absolute accuracy of PM_{10} samplers. Part 53 of this chapter provides a specification for the sampling effectiveness of PM_{10} samplers. This specification requires that the expected mass concentration calculated for a candidate PM_{10} sampler, when sampling a specified particle size distribution, be within ±10 percent of that calculated for an ideal sampler whose sampling effectiveness is explicitly specified. Also, the particle size for 50 percent sampling effectiveness is required to be 10±0.5 micrometers. Other specifications related to accuracy apply to flow measurement and calibration, filter media, analytical (weighing) procedures, and artifact. The flow rate accuracy of PM_{10} samplers used in certain monitoring networks is required by part 58 of this chapter to be assessed periodically via flow rate audits.

6.0 *Potential Sources of Error.*

6.1 *Volatile Particles.* Volatile particles collected on filters are often lost during shipment and/or storage of the filters prior to the post-sampling weighing[3]. Although shipment or storage of loaded filters is sometimes unavoidable, filters should be reweighed as soon as practical to minimize these losses.

6.2 *Artifacts.* Positive errors in PM_{10} concentration measurements may result from retention of gaseous species on filters[4,5]. Such errors include the retention of sulfur dioxide and nitric acid. Retention of sulfur

dioxide on filters, followed by oxidation to sulfate, is referred to as artifact sulfate formation, a phenomenon which increases with increasing filter alkalinity[6]. Little or no artifact sulfate formation should occur using filters that meet the alkalinity specification in section 7.2.4 of this appendix, Artifact nitrate formation, resulting primarily from retention of nitric acid, occurs to varying degrees on many filter types, including glass fiber, cellulose ester, and many quartz fiber filters[5,7,8,9,10]. Loss of true atmospheric particulate nitrate during or following sampling may also occur due to dissociation or chemical reaction. This phenomenon has been observed on Teflon®filters[8] and inferred for quartz fiber filters[11,12]. The magnitude of nitrate artifact errors in PM_{10} mass concentration measurements will vary with location and ambient temperature; however, for most sampling locations, these errors are expected to be small.

6.3 *Humidity*. The effects of ambient humidity on the sample are unavoidable. The filter equilibration procedure in section 9.0 of this appendix is designed to minimize the effects of moisture on the filter medium.

6.4 *Filter Handling*. Careful handling of filters between presampling and postsampling weighings is necessary to avoid errors due to damaged filters or loss of collected particles from the filters. Use of a filter cartridge or cassette may reduce the magnitude of these errors. Filters must also meet the integrity specification in section 7.2.3 of this appendix.

6.5 *Flow Rate Variation*. Variations in the sampler's operating flow rate may alter the particle size discrimination characteristics of the sampler inlet. The magnitude of this error will depend on the sensitivity of the inlet to variations in flow rate and on the particle distribution in the atmosphere during the sampling period. The use of a flow control device, under section 7.1.3 of this appendix, is required to minimize this error.

6.6 *Air Volume Determination*. Errors in the air volume determination may result from errors in the flow rate and/or sampling time measurements. The flow control device serves to minimize errors in the flow rate determination, and an elapsed time meter, under section 7.1.5 of this appendix, is required to minimize the error in the sampling time measurement.

7.0 *Apparatus*.

7.1 PM_{10} Sampler.

7.1.1 The sampler shall be designed to:

(a) Draw the air sample into the sampler inlet and through the particle collection filter at a uniform face velocity.

(b) Hold and seal the filter in a horizontal position so that sample air is drawn downward through the filter.

(c) Allow the filter to be installed and removed conveniently.

(d) Protect the filter and sampler from precipitation and prevent insects and other debris from being sampled.

(e) Minimize air leaks that would cause error in the measurement of the air volume passing through the filter.

(f) Discharge exhaust air at a sufficient distance from the sampler inlet to minimize the sampling of exhaust air.

(g) Minimize the collection of dust from the supporting surface.

7.1.2 The sampler shall have a sample air inlet system that, when operated within a specified flow rate range, provides particle size discrimination characteristics meeting all of the applicable performance specifications prescribed in part 53 of this chapter. The sampler inlet shall show no significant wind direction dependence. The latter requirement can generally be satisfied by an inlet shape that is circularly symmetrical about a vertical axis.

7.1.3 The sampler shall have a flow control device capable of maintaining the sampler's operating flow rate within the flow rate limits specified for the sampler inlet over normal variations in line voltage and filter pressure drop.

7.1.4 The sampler shall provide a means to measure the total flow rate during the sampling period. A continuous flow recorder is recommended but not required. The flow measurement device shall be accurate to ±2 percent.

7.1.5 A timing/control device capable of starting and stopping the sampler shall be used to obtain a sample collection period of 24 ±1 hr (1,440 ±60 min). An elapsed time meter, accurate to within ±15 minutes, shall be used to measure sampling time. This meter is optional for samplers with continuous flow recorders if the sampling time measurement obtained by means of the recorder meets the ±15 minute accuracy specification.

7.1.6 The sampler shall have an associated operation or instruction manual as required by part 53 of this chapter which includes detailed instructions on the calibration, operation, and maintenance of the sampler.

7.2 *Filters*.

7.2.1 *Filter Medium*. No commercially available filter medium is ideal in all respects for all samplers. The user's goals in sampling determine the relative importance of various filter characteristics, e.g., cost, ease of handling, physical and chemical characteristics, etc., and, consequently, determine the choice among acceptable filters. Furthermore, certain types of filters may not be suitable for use with some samplers, particularly under heavy loading conditions (high mass concentrations), because of high or rapid increase in the filter flow resistance that would exceed the capability of the sampler's flow control device. However, samplers equipped with automatic filter-changing

mechanisms may allow use of these types of filters. The specifications given below are minimum requirements to ensure acceptability of the filter medium for measurement of PM_{10} mass concentrations. Other filter evaluation criteria should be considered to meet individual sampling and analysis objectives.

7.2.2 *Collection Efficiency*. ≧99 percent, as measured by the DOP test (ASTM–2986) with 0.3 µm particles at the sampler's operating face velocity.

7.2.3 *Integrity*. ±5 µg/m³ (assuming sampler's nominal 24-hour air sample volume). Integrity is measured as the PM_{10} concentration equivalent corresponding to the average difference between the initial and the final weights of a random sample of test filters that are weighed and handled under actual or simulated sampling conditions, but have no air sample passed through them, i.e., filter blanks. As a minimum, the test procedure must include initial equilibration and weighing, installation on an inoperative sampler, removal from the sampler, and final equilibration and weighing.

7.2.4 *Alkalinity*. <25 microequivalents/gram of filter, as measured by the procedure given in reference 13 of section 12.0 of this appendix following at least two months storage in a clean environment (free from contamination by acidic gases) at room temperature and humidity.

7.3 *Flow Rate Transfer Standard*. The flow rate transfer standard must be suitable for the sampler's operating flow rate and must be calibrated against a primary flow or volume standard that is traceable to the National Institute of Standard and Technology (NIST). The flow rate transfer standard must be capable of measuring the sampler's operating flow rate with an accuracy of ±2 percent.

7.4 *Filter Conditioning Environment*.

7.4.1 *Temperature range*. 15 to 30 C.

7.4.2 *Temperature control*. ±3 C.

7.4.3 *Humidity range*. 20% to 45% RH.

7.4.4 *Humidity control*. ±5% RH.

7.5 *Analytical Balance*. The analytical balance must be suitable for weighing the type and size of filters required by the sampler. The range and sensitivity required will depend on the filter tare weights and mass loadings. Typically, an analytical balance with a sensitivity of 0.1 mg is required for high volume samplers (flow rates >0.5 m³/min). Lower volume samplers (flow rates <0.5 m³/min) will require a more sensitive balance.

8.0 *Calibration*.

8.1 *General Requirements*.

8.1.1 Calibration of the sampler's flow measurement device is required to establish traceability of subsequent flow measurements to a primary standard. A flow rate transfer standard calibrated against a primary flow or volume standard shall be used to calibrate or verify the accuracy of the sampler's flow measurement device.

8.1.2 Particle size discrimination by inertial separation requires that specific air velocities be maintained in the sampler's air inlet system. Therefore, the flow rate through the sampler's inlet must be maintained throughout the sampling period within the design flow rate range specified by the manufacturer. Design flow rates are specified as actual volumetric flow rates, measured at existing conditions of temperature and pressure (Q_a).

8.2 *Flow Rate Calibration Procedure*.

8.2.1 PM_{10} samplers employ various types of flow control and flow measurement devices. The specific procedure used for flow rate calibration or verification will vary depending on the type of flow controller and flow rate indicator employed. Calibration is in terms of actual volumetric flow rates (Q_a) to meet the requirements of section 8.1 of this appendix. The general procedure given here serves to illustrate the steps involved in the calibration. Consult the sampler manufacturer's instruction manual and reference 2 of section 12.0 of this appendix for specific guidance on calibration. Reference 14 of section 12.0 of this appendix provides additional information on various other measures of flow rate and their interrelationships.

8.2.2 Calibrate the flow rate transfer standard against a primary flow or volume standard traceable to NIST. Establish a calibration relationship, e.g., an equation or family of curves, such that traceability to the primary standard is accurate to within 2 percent over the expected range of ambient conditions, i.e., temperatures and pressures, under which the transfer standard will be used. Recalibrate the transfer standard periodically.

8.2.3 Following the sampler manufacturer's instruction manual, remove the sampler inlet and connect the flow rate transfer standard to the sampler such that the transfer standard accurately measures the sampler's flow rate. Make sure there are no leaks between the transfer standard and the sampler.

8.2.4 Choose a minimum of three flow rates (actual m³/min), spaced over the acceptable flow rate range specified for the inlet, under section 7.1.2 of the appendix, that can be obtained by suitable adjustment of the sampler flow rate. In accordance with the sampler manufacturer's instruction manual, obtain or verify the calibration relationship between the flow rate (actual m³/min) as indicated by the transfer standard and the sampler's flow indicator response. Record the ambient temperature and barometric pressure. Temperature and pressure corrections to subsequent flow indicator readings may be required for certain types of flow measurement devices. When such corrections are necessary, correction on an individual or

daily basis is preferable. However, seasonal average temperature and average barometric pressure for the sampling site may be incorporated into the sampler calibration to avoid daily corrections. Consult the sampler manufacturer's instruction manual and reference 2 in section 12.0 of this appendix for additional guidance.

8.2.5 Following calibration, verify that the sampler is operating at its design flow rate (actual m^3/min) with a clean filter in place.

8.2.6 Replace the sampler inlet.

9.0 *Procedure.*

9.1 The sampler shall be operated in accordance with the specific guidance provided in the sampler manufacturer's instruction manual and in reference 2 in section 12.0 of this appendix. The general procedure given here assumes that the sampler's flow rate calibration is based on flow rates at ambient conditions (Q_a) and serves to illustrate the steps involved in the operation of a PM_{10} sampler.

9.2 Inspect each filter for pinholes, particles, and other imperfections. Establish a filter information record and assign an identification number to each filter.

9.3 Equilibrate each filter in the conditioning environment (see 7.4) for at least 24 hours.

9.4 Following equilibration, weigh each filter and record the presampling weight with the filter identification number.

9.5 Install a preweighed filter in the sampler following the instructions provided in the sampler manufacturer's instruction manual.

9.6 (a) Turn on the sampler and allow it to establish run-temperature conditions. Record the flow indicator reading and, if needed, the ambient temperature and barometric pressure. Determine the sampler flow rate (actual m^3/min) in accordance with the instructions provided in the sampler manufacturer's instruction manual.

(b) Note: No onsite temperature or pressure measurements are necessary if the sampler's flow indicator does not require temperature or pressure corrections or if seasonal average temperature and average barometric pressure for the sampling site are incorporated into the sampler calibration, under section 8.2.4 of this appendix. If individual or daily temperature and pressure corrections are required, ambient temperature and barometric pressure can be obtained by on-site measurements or from a nearby weather station. Barometric pressure readings obtained from airports must be station pressure, not corrected to sea level, and may need to be corrected for differences in elevation between the sampling site and the airport.

9.7 If the flow rate is outside the acceptable range specified by the manufacturer, check for leaks, and if necessary, adjust the flow rate to the specified setpoint. Stop the sampler.

9.8 Set the timer to start and stop the sampler at appropriate times. Set the elapsed time meter to zero or record the initial meter reading.

9.9 Record the sample information (site location or identification number, sample date, filter identification number, and sampler model and serial number).

9.10 Sample for 24±1 hours.

9.11 Determine and record the average flow rate (Q_a) in actual m^3/min for the sampling period in accordance with the instructions provided in the sampler manufacturer's instruction manual. Record the elapsed time meter final reading and, if needed, the average ambient temperature and barometric pressure for the sampling period, in note following section 9.6 of this appendix.

9.12 Carefully remove the filter from the sampler, following the sampler manufacturer's instruction manual. Touch only the outer edges of the filter.

9.13 Place the filter in a protective holder or container, e.g., petri dish, glassine envelope, or manila folder.

9.14 Record any factors such as meteorological conditions, construction activity, fires or dust storms, etc., that might be pertinent to the measurement on the filter information record.

9.15 Transport the exposed sample filter to the filter conditioning environment as soon as possible for equilibration and subsequent weighing.

9.16 Equilibrate the exposed filter in the conditioning environment for at least 24 hours under the same temperature and humidity conditions used for presampling filter equilibration (see section 9.3 of this appendix).

9.17 Immediately after equilibration, reweigh the filter and record the postsampling weight with the filter identification number.

10.0 *Sampler Maintenance.*

10.1 The PM_{10} sampler shall be maintained in strict accordance with the maintenance procedures specified in the sampler manufacturer's instruction manual.

11.0 *Calculations.*

11.1 Calculate the total volume of air sampled as:

$$V = Q_a t$$

where:

V = total air sampled, at ambient temperature and pressure, m^3;

Q_a = average sample flow rate at ambient temperature and pressure, m^3/min; and

t = sampling time, min.

11.2 (a) Calculate the PM_{10} concentration as:

$$PM_{10} = (W_f - W_i) \times 10^6 / V$$

where:

PM_{10} = mass concentration of PM_{10}, $\mu g/m^3$;
W_f, W_i = final and initial weights of filter collecting PM_{1O} particles, g; and
10^6 = conversion of g to µg.

(b) Note: If more than one size fraction in the PM_{10} size range is collected by the sampler, the sum of the net weight gain by each collection filter $[\Sigma(W_f - W_i)]$ is used to calculate the PM_{10} mass concentration.

12.0 *References.*

1. Quality Assurance Handbook for Air Pollution Measurement Systems, Volume I, Principles. EPA–600/9–76–005, March 1976. Available from CERI, ORD Publications, U.S. Environmental Protection Agency, 26 West St. Clair Street, Cincinnati, OH 45268.

2. Quality Assurance Handbook for Air Pollution Measurement Systems, Volume II, Ambient Air Specific Methods. EPA–600/4–77–027a, May 1977. Available from CERI, ORD Publications, U.S. Environmental Protection Agency, 26 West St. Clair Street, Cincinnati, OH 45268.

3. Clement, R.E., and F.W. Karasek. Sample Composition Changes in Sampling and Analysis of Organic Compounds in Aerosols. Int. J. Environ. Analyt. Chem., 7:109, 1979.

4. Lee, R.E., Jr., and J. Wagman. A Sampling Anomaly in the Determination of Atmospheric Sulfate Concentration. Amer. Ind. Hyg. Assoc. J., 27:266, 1966.

5. Appel, B.R., S.M. Wall, Y. Tokiwa, and M. Haik. Interference Effects in Sampling Particulate Nitrate in Ambient Air. Atmos. Environ., 13:319, 1979.

6. Coutant, R.W. Effect of Environmental Variables on Collection of Atmospheric Sulfate. Environ. Sci. Technol., 11:873, 1977.Spicer, C.W., and P. Schumacher. Interference in Sampling Atmospheric Particulate Nitrate. Atmos. Environ., 11:873, 1977.

8. Appel, B.R., Y. Tokiwa, and M. Haik. Sampling of Nitrates in Ambient Air. Atmos. Environ., 15:283, 1981.

9. Spicer, C.W., and P.M. Schumacher. Particulate Nitrate: Laboratory and Field Studies of Major Sampling Interferences. Atmos. Environ., 13:543, 1979.

10. Appel, B.R. Letter to Larry Purdue, U.S. EPA, Environmental Monitoring and Support Laboratory. March 18, 1982, Docket No. A–82–37, II–I–1.

11. Pierson, W.R., W.W. Brachaczek, T.J. Korniski, T.J. Truex, and J.W. Butler. Artifact Formation of Sulfate, Nitrate, and Hydrogen Ion on Backup Filters: Allegheny Mountain Experiment. J. Air Pollut. Control Assoc., 30:30, 1980.

12. Dunwoody, C.L. Rapid Nitrate Loss From PM_{10} Filters. J. Air Pollut. Control Assoc., 36:817, 1986.

13. Harrell, R.M. Measuring the Alkalinity of Hi-Vol Air Filters. EMSL/RTP–SOP–QAD–534, October 1985. Available from the U.S. Environmental Protection Agency, EMSL/QAD, Research Triangle Park, NC 27711.

14. Smith, F., P.S. Wohlschlegel, R.S.C. Rogers, and D.J. Mulligan. Investigation of Flow Rate Calibration Procedures Associated With the High Volume Method for Determination of Suspended Particulates. EPA–600/4–78–047, U.S. Environmental Protection Agency, Research Triangle Park, NC 27711, 1978.

[62 FR 38753, July 18, 1997]

APPENDIX N TO PART 50—INTERPRETATION OF THE NATIONAL AMBIENT AIR QUALITY STANDARDS FOR PARTICULATE MATTER

1.0 *General.*

(a) This appendix explains the data handling conventions and computations necessary for determining when the annual and 24-hour primary and secondary national ambient air quality standards for PM specified in §50.7 of this chapter are met. Particulate matter is measured in the ambient air as PM_{10} and $PM_{2.5}$ (particles with an aerodynamic diameter less than or equal to a nominal 10 and 2.5 micrometers, respectively) by a reference method based on appendix M of this part for PM_{10} and on appendix L of this part for $PM_{2.5}$, as applicable, and designated in accordance with part 53 of this chapter, or by an equivalent method designated in accordance with part 53 of this chapter. Data handling and computation procedures to be used in making comparisons between reported PM_{10} and $PM_{2.5}$ concentrations and the levels of the PM standards are specified in the following sections.

(b) Data resulting from uncontrollable or natural events, for example structural fires or high winds, may require special consideration. In some cases, it may be appropriate to exclude these data because they could result in inappropriate values to compare with the levels of the PM standards. In other cases, it may be more appropriate to retain the data for comparison with the level of the PM standards and then allow the EPA to formulate the appropriate regulatory response. Whether to exclude, retain, or make adjustments to the data affected by uncontrollable or natural events is subject to the approval of the appropriate Regional Administrator.

(c) The terms used in this appendix are defined as follows:

Average and *mean* refer to an arithmetic mean.

Daily value for PM refers to the 24-hour average concentration of PM calculated or measured from midnight to midnight (local time) for PM_{10} or $PM_{2.5}$.

Designated monitors are those monitoring sites designated in a State PM Monitoring Network Description for spatial averaging in areas opting for spatial averaging in accordance with part 58 of this chapter.

98th *percentile* (used for $PM_{2.5}$) means the daily value out of a year of monitoring data below which 98 percent of all values in the group fall.

99th *percentile* (used for PM_{10}) means the daily value out of a year of monitoring data below which 99 percent of all values in the group fall.

Year refers to a calendar year.

(d) Sections 2.1 and 2.5 of this appendix contain data handling instructions for the option of using a spatially averaged network of monitors for the annual standard. If spatial averaging is not considered for an area, then the spatial average is equivalent to the annual average of a single site and is treated accordingly in subsequent calculations. For example, paragraph (a)(3) of section 2.1 of this appendix could be eliminated since the spatial average would be equivalent to the annual average.

2.0 *Comparisons with the $PM_{2.5}$ Standards.*

2.1 *Annual $PM_{2.5}$ Standard.*

(a) The annual $PM_{2.5}$ standard is met when the 3-year average of the spatially averaged annual means is less than or equal to 15.0 μg/m³. The 3-year average of the spatially averaged annual means is determined by averaging quarterly means at each monitor to obtain the annual mean $PM_{2.5}$ concentrations at each monitor, then averaging across all designated monitors, and finally averaging for 3 consecutive years. The steps can be summarized as follows:

(1) Average 24-hour measurements to obtain quarterly means at each monitor.

(2) Average quarterly means to obtain annual means at each monitor.

(3) Average across designated monitoring sites to obtain an annual spatial mean for an area (this can be one site in which case the spatial mean is equal to the annual mean).

(4) Average 3 years of annual spatial means to obtain a 3-year average of spatially averaged annual means.

(b) In the case of spatial averaging, 3 years of spatial averages are required to demonstrate that the standard has been met. Designated sites with less than 3 years of data shall be included in spatial averages for those years that data completeness requirements are met. For the annual $PM_{2.5}$ standard, a year meets data completeness requirements when at least 75 percent of the scheduled sampling days for each quarter have valid data. However, years with high concentrations and more than a minimal amount of data (at least 11 samples in each quarter) shall not be ignored just because they are comprised of quarters with less than complete data. Thus, in computing annual spatially averaged means, years containing quarters with at least 11 samples but less than 75 percent data completeness shall be included in the computation if the resulting spatially averaged annual mean concentration (rounded according to the conventions of section 2.3 of this appendix) is greater than the level of the standard.

(c) Situations may arise in which there are compelling reasons to retain years containing quarters which do not meet the data completeness requirement of 75 percent or the minimum number of 11 samples. The use of less than complete data is subject to the approval of the appropriate Regional Administrator.

(d) The equations for calculating the 3-year average annual mean of the $PM_{2.5}$ standard are given in section 2.5 of this appendix.

2.2 *24-Hour $PM_{2.5}$ Standard.*

(a) The 24-hour $PM_{2.5}$ standard is met when the 3-year average of the 98th percentile values at each monitoring site is less than or equal to 65 μg/m³. This comparison shall be based on 3 consecutive, complete years of air quality data. A year meets data completeness requirements when at least 75 percent of the scheduled sampling days for each quarter have valid data. However, years with high concentrations shall not be ignored just because they are comprised of quarters with less than complete data. Thus, in computing the 3-year average 98th percentile value, years containing quarters with less than 75 percent data completeness shall be included in the computation if the annual 98th percentile value (rounded according to the conventions of section 2.3 of this appendix) is greater than the level of the standard.

(b) Situations may arise in which there are compelling reasons to retain years containing quarters which do not meet the data completeness requirement. The use of less than complete data is subject to the approval of the appropriate Regional Administrator.

(c) The equations for calculating the 3-year average of the annual 98th percentile values is given in section 2.6 of this appendix.

2.3 *Rounding Conventions.* For the purposes of comparing calculated values to the applicable level of the standard, it is necessary to round the final results of the calculations described in sections 2.5 and 2.6 of this appendix. For the annual $PM_{2.5}$ standard, the 3-year average of the spatially averaged annual means shall be rounded to the nearest 0.1 μg/m³ (decimals 0.05 and greater are rounded up to the next 0.1, and any decimal lower than 0.05 is rounded down to the nearest 0.1). For the 24-hour $PM_{2.5}$ standard, the 3-year average of the annual 98th percentile values shall be rounded to the nearest 1 μg/m³ (decimals 0.5 and greater are rounded up to nearest whole number, and any decimal lower than 0.5 is rounded down to the nearest whole number).

2.4 *Monitoring Considerations.*

(a) Section 58.13 of this chapter specifies the required minimum frequency of sampling

for $PM_{2.5}$. Exceptions to the specified sampling frequencies, such as a reduced frequency during a season of expected low concentrations, are subject to the approval of the appropriate Regional Administrator. Section 58.14 of 40 CFR part 58 and section 2.8 of appendix D of 40 CFR part 58, specify which monitors are eligible for making comparisons with the PM standards. In determining a spatial mean using two or more monitoring sites operating in a given year, the annual mean for an individual site may be included in the spatial mean if and only if the mean for that site meets the criterion specified in §2.8 of appendix D of 40 CFR part 58. In the event data from an otherwise eligible site is excluded from being averaged with data from other sites on the basis of this criterion, then the 3-year mean from that site shall be compared directly to the annual standard.

(b) For the annual $PM_{2.5}$ standard, when designated monitors are located at the same site and are reporting $PM_{2.5}$ values for the same time periods, and when spatial averaging has been chosen, their concentrations shall be averaged before an area-wide spatial average is calculated. Such monitors will then be considered as one monitor.

2.5 *Equations for the Annual $PM_{2.5}$ Standard.*

(a) An annual mean value for $PM_{2.5}$ is determined by first averaging the daily values of a calendar quarter:

Equation 1

$$\bar{x}_{q,y,s} = \frac{1}{n_q}\sum_{i=1}^{n_q} x_{i,q,y,s}$$

where:

$\bar{x}_{q,y,s}$ = the mean for quarter q of year y for site s;

n_q = the number of monitored values in the quarter; and

$x_{i,q,y,s}$ = the ith value in quarter q for year y for site s.

(b) The following equation is then to be used for calculation of the annual mean:

Equation 2

$$\bar{x}_{y,s} = \frac{1}{4}\sum_{q=1}^{4} \bar{x}_{q,y,s}$$

where:

$\bar{x}_{y,s}$ = the annual mean concentration for year y (y = 1, 2, or 3) and for site s; and

$\bar{x}_{q,y,s}$ = the mean for quarter q of year y for site s.

(c)(1) The spatially averaged annual mean for year y is computed by first calculating the annual mean for each site designated to be included in a spatial average, $\bar{x}_{y,s}$, and then computing the average of these values across sites:

Equation 3

$$\bar{x}_y = \frac{1}{n_s}\sum_{s=1}^{n_s} \bar{x}_{y,s}$$

where:

$\bar{x}_y$ = the spatially averaged mean for year y;

$\bar{x}_{y,s}$ = the annual mean for year y and site s; and

n_s = the number of sites designated to be averaged.

(2) In the event that an area designated for spatial averaging has two or more sites at the same location producing data for the same time periods, the sites are averaged together before using Equation 3 by:

Equation 4

$$\bar{x}_{y,s*} = \frac{1}{n_c}\sum_{s=1}^{n_c} \bar{x}_{y,s}$$

where:

$\bar{x}_{y,s*}$ = the annual mean for year y for the sites at the same location (which will now be considered one site);

n_c = the number of sites at the same location designated to be included in the spatial average; and

$\bar{x}_{y,s}$ = the annual mean for year y and site s.

(d) The 3-year average of the spatially averaged annual means is calculated by using the following equation:

Equation 5

$$\bar{x} = \frac{1}{3}\sum_{y=1}^{3} \bar{x}_y$$

where:

$\bar{x}$ = the 3-year average of the spatially averaged annual means; and

$\bar{x}_y$ = the spatially averaged annual mean for year y.

Example 1—Area Designated for Spatial Averaging That Meets the Primary Annual $PM_{2.5}$ Standard.

a. In an area designated for spatial averaging, four designated monitors recorded data in at least 1 year of a particular 3-year period. Using Equations 1 and 2, the annual means for $PM_{2.5}$ at each site are calculated for each year. The following table can be created from the results. Data completeness percentages for the quarter with the fewest number of samples are also shown.

TABLE 1—RESULTS FROM EQUATIONS 1 AND 2

		Site ⊥1	Site ⊥2	Site ⊥3	Site ⊥4	Spatial mean
Year 1	Annual mean (μg/m³)	12.7	.....	.....	.....	12.7
	% data completeness	80	0	0	0	.....
Year 2	Annual mean (μg/m³)	12.6	17.5	15.2	.....	15.05
	% data completeness	90	63	38	0	.....
Year 3	Annual mean (μg/m³)	12.5	18.5	14.1	16.9	15.50
	% data completeness	90	80	85	50	.....
3-year mean	.....	.....	.....	.....	.....	14.42

b. The data from these sites are averaged in the order described in section 2.1 of this appendix. Note that the annual mean from site #3 in year 2 and the annual mean from site #4 in year 3 do not meet the 75 percent data completeness criteria. Assuming the 38 percent data completeness represents a quarter with fewer than 11 samples, site #3 in year 2 does not meet the minimum data completeness requirement of 11 samples in each quarter. The site is therefore excluded from the calculation of the spatial mean for year 2. However, since the spatial mean for year 3 is above the level of the standard and the minimum data requirement of 11 samples in each quarter has been met, the annual mean from site #4 in year 3 is included in the calculation of the spatial mean for year 3 and in the calculation of the 3-year average. The 3-year average is rounded to 14.4 μg/m³, indicating that this area meets the annual $PM_{2.5}$ standard.

Example 2—Area With Two Monitors at the Same Location That Meets the Primary Annual $PM_{2.5}$ Standard.

a. In an area designated for spatial averaging, six designated monitors, with two monitors at the same location (#5 and #6), recorded data in a particular 3-year period. Using Equations 1 and 2, the annual means for $PM_{2.5}$ are calculated for each year. The following table can be created from the results.

TABLE 2—RESULTS FROM EQUATIONS 1 AND 2

Annual mean (μg/m³)	Site ⊥1	Site ⊥2	Site ⊥3	Site ⊥4	Site ⊥5	Site ⊥6	Average of ⊥5 and ⊥6	Spatial mean
Year 1	12.9	9.9	12.6	11.1	14.5	14.6	14.55	12.21
Year 2	14.5	13.3	12.2	10.9	16.1	16.0	16.05	13.39
Year 3	14.4	12.4	11.5	9.7	12.3	12.1	12.20	12.04
3-Year mean	.....	.....	.....	.....	.....	.....	.....	12.55

b. The annual means for sites #5 and #6 are averaged together using Equation 4 before the spatial average is calculated using Equation 3 since they are in the same location. The 3-year mean is rounded to 12.6 μg/m³, indicating that this area meets the annual $PM_{2.5}$ standard.

Example 3—Area With a Single Monitor That Meets the Primary Annual $PM_{2.5}$ Standard.

a. Given data from a single monitor in an area, the calculations are as follows. Using Equations 1 and 2, the annual means for $PM_{2.5}$ are calculated for each year. If the annual means are 10.28, 17.38, and 12.25 μg/m³, then the 3-year mean is:

$$\bar{x} = (1/3) \times (10.28 + 17.38 + 12.25) = 13.303\ \mu g/m^3.$$

b. This value is rounded to 13.3, indicating that this area meets the annual $PM_{2.5}$ standard.

2.6 *Equations for the 24-Hour $PM_{2.5}$ Standard.*

(a) When the data for a particular site and year meet the data completeness requirements in section 2.2 of this appendix, calculation of the 98th percentile is accomplished by the following steps. All the daily values from a particular site and year comprise a series of values (x_1, x_2, x_3, ..., x_n), that can be sorted into a series where each number is equal to or larger than the preceding number ($x_{[1]}$, $x_{[2]}$, $x_{[3]}$, ..., $x_{[n]}$). In this case, $x_{[1]}$ is the smallest number and $x_{[n]}$ is the largest value. The 98th percentile is found from the

sorted series of daily values which is ordered from the lowest to the highest number. Compute (0.98) × (n) as the number ''i.d'', where ''i'' is the integer part of the result and ''d'' is the decimal part of the result. The 98th percentile value for year y, $P_{0.98,\ y}$, is given by Equation 6:

Equation 6

$$P_{0.98,y} = X_{[i+1]}$$

where:

$P_{0.98,y}$ = 98th percentile for year y;

$x_{[i=1]}$ = the (i=1)th number in the ordered series of numbers; and

i = the integer part of the product of 0.98 and n.

(b) The 3-year average 98th percentile is then calculated by averaging the annual 98th percentiles:

Equation 7

$$P_{0.98} = \frac{\sum_{y=1}^{3} P_{0.98,y}}{3}$$

(c) The 3-year average 98th percentile is rounded according to the conventions in section 2.3 of this appendix before a comparison with the standard is made.

Example 4—Ambient Monitoring Site With Every-Day Sampling That Meets the Primary 24-Hour $PM_{2.5}$ Standard.

a. In each year of a particular 3 year period, varying numbers of daily $PM_{2.5}$ values (e.g., 281, 304, and 296) out of a possible 365 values were recorded at a particular site with the following ranked values (in µg/m³):

TABLE 3—ORDERED MONITORING DATA FOR 3 YEARS

Year 1		Year 2		Year 3	
j rank	X_j value	j rank	X_j value	j rank	X_j value
275	57.9	296	54.3	290	66.0
276	59.0	297	57.1	291	68.4
277	62.2	298	63.0	292	69.8

b. Using Equation 6, the 98th percentile values for each year are calculated as follows:

$$0.98 \times 281 = 275.38 \Rightarrow i+1 = 276 \Rightarrow P_{0.98,1} = X_{[276]} = 59.0\mu g/m^3$$

$$0.98 \times 304 = 297.92 \Rightarrow i+1 = 298 \Rightarrow P_{0.98,2} = X_{[298]} = 63.0\mu g/m^3$$

$$0.98 \times 296 = 290.07 \Rightarrow i+1 = 291 \Rightarrow P_{0.98,3} = X_{[291]} = 68.4\mu g/m^3$$

c.1. Using Equation 7, the 3-year average 98th percentile is calculated as follows:

$$P_{0.98} = \frac{59.0 + 63.0 + 68.4}{3} = 63.46\mu g/m^3, \text{ which rounds to } 63\mu g/m^3.$$

2. Therefore, this site meets the 24-hour $PM_{2.5}$ standard.

3.0 *Comparisons with the PM_{10} Standards.*

3.1 *Annual PM_{10} Standard.*

(a) The annual PM_{10} standard is met when the 3-year average of the annual mean PM_{10} concentrations at each monitoring site is less than or equal to 50 µg/m³. The 3-year average of the annual means is determined by averaging quarterly means to obtain annual mean PM_{10} concentrations for 3 consecutive, complete years at each monitoring site. The steps can be summarized as follows:

(1) Average 24-hour measurements to obtain a quarterly mean.

(2) Average quarterly means to obtain an annual mean.

(3) Average annual means to obtain a 3-year mean.

(b) For the annual PM_{10} standard, a year meets data completeness requirements when at least 75 percent of the scheduled sampling days for each quarter have valid data. However, years with high concentrations and more than a minimal amount of data (at least 11 samples in each quarter) shall not be ignored just because they are comprised of quarters with less than complete data. Thus, in computing the 3-year average annual mean concentration, years containing quarters with at least 11 samples but less than 75 percent data completeness shall be included in the computation if the annual mean concentration (rounded according to the conventions of section 2.3 of this appendix) is greater than the level of the standard.

(c) Situations may arise in which there are compelling reasons to retain years containing quarters which do not meet the data completeness requirement of 75 percent or the minimum number of 11 samples. The use of less than complete data is subject to the approval of the appropriate Regional Administrator.

(d) The equations for calculating the 3-year average annual mean of the PM_{10} standard are given in section 3.5 of this appendix.

3.2 *24-Hour PM_{10} Standard.*

(a) The 24-hour PM_{10} standard is met when the 3-year average of the annual 99th percentile values at each monitoring site is less than or equal to 150 μg/m³. This comparison shall be based on 3 consecutive, complete years of air quality data. A year meets data completeness requirements when at least 75 percent of the scheduled sampling days for each quarter have valid data. However, years with high concentrations shall not be ignored just because they are comprised of quarters with less than complete data. Thus, in computing the 3-year average of the annual 99th percentile values, years containing quarters with less than 75 percent data completeness shall be included in the computation if the annual 99th percentile value (rounded according to the conventions of section 2.3 of this appendix) is greater than the level of the standard.

(b) Situations may arise in which there are compelling reasons to retain years containing quarters which do not meet the data completeness requirement. The use of less than complete data is subject to the approval of the appropriate Regional Administrator.

(c) The equation for calculating the 3-year average of the annual 99th percentile values is given in section 2.6 of this appendix.

3.3 *Rounding Conventions.* For the annual PM_{10} standard, the 3-year average of the annual PM_{10} means shall be rounded to the nearest 1 μg/m³ (decimals 0.5 and greater are rounded up to the next whole number, and any decimal less than 0.5 is rounded down to the nearest whole number). For the 24-hour PM_{10} standard, the 3-year average of the annual 99th percentile values of PM_{10} shall be rounded to the nearest 10 μg/m³ (155 μg/m³ and greater would be rounded to 160 μg/m³ and 154 μg/m³ and less would be rounded to 150 μg/m³).

3.4 *Monitoring Considerations.* Section 58.13 of this chapter specifies the required minimum frequency of sampling for PM_{10}. Exceptions to the specified sampling frequencies, such as a reduced frequency during a season of expected low concentrations, are subject to the approval of the appropriate Regional Administrator. For making comparisons with the PM_{10} NAAQS, all sites meeting applicable requirements in part 58 of this chapter would be used.

3.5 *Equations for the Annual PM_{10} Standard.*

(a) An annual arithmetic mean value for PM_{10} is determined by first averaging the 24-hour values of a calendar quarter using the following equation:

Equation 8

$$\bar{x}_{q,y} = \frac{1}{n_q}\sum_{i=1}^{n_q} x_{i,q,y}$$

where:

$\bar{x}_{q,y}$ = the mean for quarter q of year y;

n_q = the number of monitored values in the quarter; and

$x_{i,q,y}$ = the ith value in quarter q for year y.

(b) The following equation is then to be used for calculation of the annual mean:

Equation 9

$$\bar{x}_y = \frac{1}{4}\sum_{q=1}^{4} \bar{x}_{q,y}$$

where:

$\bar{x}_y$ = the annual mean concentration for year y, (y=1, 2, or 3); and

$x_{q,y}$ = the mean for a quarter q of year y.

(c) The 3-year average of the annual means is calculated by using the following equation:

Equation 10

$$\bar{x} = \frac{1}{3}\sum_{y=1}^{3} \bar{x}_y$$

where:

$\bar{x}$ = the 3-year average of the annual means; and

$\bar{x}_y$ = the annual mean for calendar year y.

Example 5—Ambient Monitoring Site That Does Not Meet the Annual PM_{10} Standard.

a. Given data from a PM_{10} monitor and using Equations 8 and 9, the annual means for PM_{10} are calculated for each year. If the annual means are 52.42, 82.17, and 63.23 µg/m³, then the 3-year average annual mean is:

$$\bar{x} = (1/3) \times (52.42 + 82.17 + 63.23) = 65.94, \text{ which is rounded to } 66\ \mu g/m^3.$$

b. Therefore, this site does not meet the annual PM_{10} standard.

3.6 *Equation for the 24-Hour PM_{10} Standard.*

(a) When the data for a particular site and year meet the data completeness requirements in section 3.2 of this appendix, calculation of the 99th percentile is accomplished by the following steps. All the daily values from a particular site and year comprise a series of values (x_1, x_2, x_3, ..., x_n) that can be sorted into a series where each number is equal to or larger than the preceding number ($x_{[1]}$, $x_{[2]}$, $x_{[3]}$, ..., $x_{[n]}$). In this case, $x_{[1]}$ is the smallest number and x[n] is the largest value. The 99th percentile is found from the sorted series of daily values which is ordered from the lowest to the highest number. Compute (0.99) × (n) as the number ''i.d'', where ''i'' is the integer part of the result and ''d'' is the decimal part of the result. The 99th percentile value for year y, $P_{0.99,y}$, is given by Equation 11:

Equation 11

$$P_{0.99,y} = X_{[i+1]}$$

where:

$P_{0.99,y}$ = the 99th percentile for year y;

$x_{[i=1]}$ = the (i=1)th number in the ordered series of numbers; and

i = the integer part of the product of 0.99 and n.

(b) The 3-year average 99th percentile value is then calculated by averaging the annual 99th percentiles:

Equation 12

$$P_{0.99} = \frac{\sum_{y=1}^{3} P_{0.99,y}}{3}$$

(c) The 3-year average 99th percentile is rounded according to the conventions in section 3.3 of this appendix before a comparison with the standard is made.

Example 6—Ambient Monitoring Site With Sampling Every Sixth Day That Meets the Primary 24-Hour PM_{10} Standard.

a. In each year of a particular 3 year period, varying numbers of PM_{10} daily values (e.g., 110, 98, and 100) out of a possible 121 daily values were recorded at a particular site with the following ranked values (in µg/m³):

TABLE 4—ORDERED MONITORING DATA FOR 3 YEARS

Year 1		Year 2		Year 3	
j rank	X_j value	j rank	X_j value	j rank	X_j value
108	120	96	143	98	140
109	128	97	148	99	144
110	130	98	150	100	147

b. Using Equation 11, the 99th percentile values for each year are calculated as follows:

$$0.99 \times 110 = 108.9 \Rightarrow i+1 = 109 \Rightarrow P_{0.99,1} = X_{[109]} = 128\mu g/m^3$$

$$0.99 \times 98 = 97.02 \Rightarrow i+1 = 98 \Rightarrow P_{0.99,2} = X_{[98]} = 150\mu g/m^3$$

$$0.99 \times 100 = 99 \Rightarrow i + 1 = 100 \Rightarrow P_{0.99,3} = X_{[100]} = 147 \mu g / m^3$$

c. 1. Using Equation 12, the 3-year average 99th percentile is calculated as follows:

$$\frac{128 + 50 + 147}{3} = 141.7\ \mu g / m^3 \text{ rounds to } 140 \mu g / m^3.$$

2. Therefore, this site meets the 24-hour PM_{10} standard.

[62 FR 38755, July 18, 1997]

PART 51—REQUIREMENTS FOR PREPARATION, ADOPTION, AND SUBMITTAL OF IMPLEMENTATION PLANS

Sec.

Subpart A—Emission Inventory Reporting Requirements

GENERAL INFORMATION FOR INVENTORY PREPARERS

51.1 Who is responsible for actions described in this subpart?
51.5 What tools are available to help prepare and report emissions data?
51.10 How does my State report emissions that are required by the NO_X SIP Call?

SPECIFIC REPORTING REQUIREMENTS

51.15 What data does my State need to report to EPA?
51.20 What are the emission thresholds that separate point and area sources?
51.25 What geographic area must my State's inventory cover?
51.30 When does my State report the data to EPA?
51.35 How can my State equalize the effort for annual reporting?
51.40 In what form should my State report the data to EPA?
51.45 Where should my State report the data?

APPENDIX A TO SUBPART A OF PART 51—TABLES AND GLOSSARY
APPENDIX B TO SUBPART A OF PART 51 [RESERVED]

Subparts B—E [Reserved]

Subpart F—Procedural Requirements

51.100 Definitions.
51.101 Stipulations.
51.102 Public hearings.
51.103 Submission of plans, preliminary review of plans.
51.104 Revisions.
51.105 Approval of plans.

Subpart G—Control Strategy

51.110 Attainment and maintenance of national standards.
51.111 Description of control measures.
51.112 Demonstration of adequacy.
51.113 [Reserved]
51.114 Emissions data and projections.
51.115 Air quality data and projections.
51.116 Data availability.
51.117 Additional provisions for lead.
51.118 Stack height provisions.
51.119 Intermittent control systems.
51.120 Requirements for State Implementation Plan revisions relating to new motor vehicles.
51.121 Findings and requirements for submission of State implementation plan revisions relating to emissions of oxides of nitrogen.
51.122 Emissions reporting requirements for SIP revisions relating to budgets for NO_X emissions.

Subpart H—Prevention of Air Pollution Emergency Episodes

51.150 Classification of regions for episode plans.
51.151 Significant harm levels.
51.152 Contingency plans.
51.153 Reevaluation of episode plans.

Subpart I—Review of New Sources and Modifications

51.160 Legally enforceable procedures.
51.161 Public availability of information.
51.162 Identification of responsible agency.
51.163 Administrative procedures.
51.164 Stack height procedures.
51.165 Permit requirements.
51.166 Prevention of significant deterioration of air quality.