US EPA ARCHIVE DOCUMENT

US EPA ARCHIVE DOCUMENT

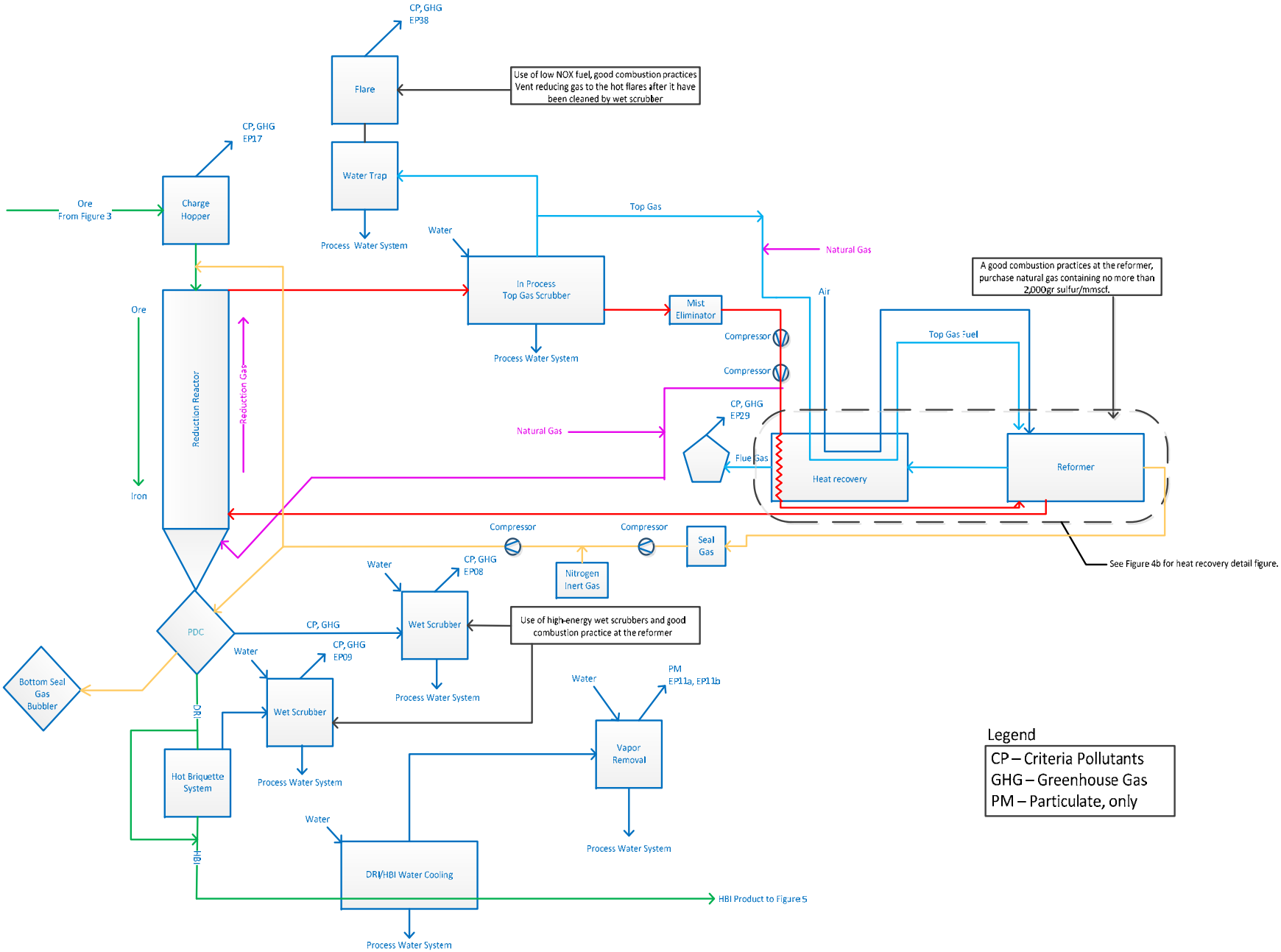


Process Flow Diagram Reduction, Reformer, Hot Briquetting Figure 4a

US EPA ARCHIVE DOCUMENT

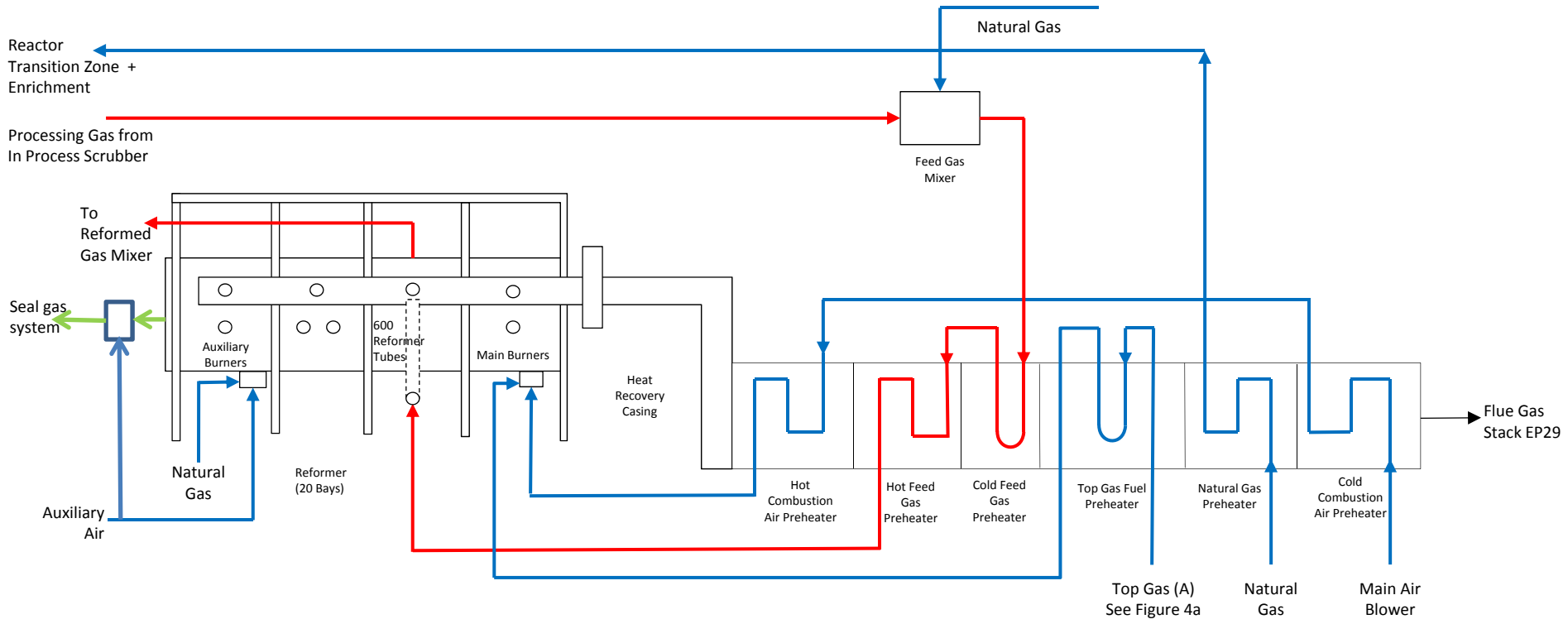


Process Gas & Reformer to Heat Recovery Figure 4b