US EPA ARCHIVE DOCUMENT

US EPA ARCHIVE DOCUMENT

PREVENTION OF SIGNIFICANT DETERIORATION GREENHOUSE GAS PERMIT APPLICATION FOR A COMBINED CYCLE POWER PLANT AT THE LA PALOMA ENERGY CENTER CAMERON COUNTY, TEXAS

REVISED 03-12-2013

SUBMITTED TO:

ENVIRONMENTAL PROTECTION AGENCY
REGION 6
MULTIMEDIA PLANNING AND PERMITTING DIVISION
FOUNTAIN PLACE 12TH FLOOR, SUITE 1200
1445 ROSS AVENUE
DALLAS, TEXAS 75202-2733

SUBMITTED BY:

LA PALOMA ENERGY CENTER, LLC
4011 WEST PLANO PARKWAY, SUITE 128
PLANO, TEXAS 75093

PREPARED BY:

ZEPHYR ENVIRONMENTAL CORPORATION
2600 VIA FORTUNA, SUITE 450
AUSTIN, TEXAS 78746

AUGUST, 2012

zephyr

TABLE OF CONTENTS

1.0 INTRODUCTION 1
FORM PI-1 GENERAL APPLICATION 2
2.0 PROJECT SCOPE 11
2.1 Introduction 11
2.2 Combustion Turbine Generator 11
2.3 Heat Recovery Steam Generator 12
2.4 Auxiliary Boiler 12
2.5 Diesel Fired Emergency Equipment 12
2.6 Natural Gas/Fuel Gas Piping 12
2.7 Electrical Equipment Insulated with Sulfur Hexafluoride (SF_6) 13
PROCESS FLOW DIAGRAM 14
PLOT PLAN 15
AREA MAP 16
3.0 GHG EMISSION CALCULATIONS 17
3.1 GHG Emissions From Combined Cycle Combustion Turbine 17
3.2 Auxiliary Boiler 17
3.3 GHG Emissions From Natural Gas/Fuel Gas Piping Fugitives and Natural Gas/Fuel Gas Maintenance and Startup/Shutdown Related Releases 18
3.4 GHG Emissions From Diesel Fired Emergency Engines 18
3.5 GHG Emissions From Electrical Equipment Insulated with SF_6 19
TABLE 3-1 ANNUAL GHG EMISSION SUMMARY 20
TABLE 3-2 ANNUAL GHG EMISSION CALCULATIONS – GE 7FA COMBINED CYCLE COMBUSTION TURBINE 21
TABLE 3-3 STARTUP GHG EMISSION CALCULATIONS - GE F7FA TURBINES 22
TABLE 3-4 GHG ANNUAL EMISSION CALCULATIONS - SIEMENS SGT6-5000F(4) COMBINED CYCLE COMBUSTION TURBINES 23
TABLE 3-5 STARTUP GHG EMISSION CALCULATIONS - SIEMENS SGT6-5000F(4) TURBINES 24
TABLE 3-6 GHG EMISSION CALCULATIONS - SIEMENS SGT6-5000F(5) COMBINED CYCLE COMBUSTION TURBINES 25
TABLE 3-7 STARTUP GHG EMISSION CALCULATIONS - SIEMENS SGT6-5000F(5) TURBINES 26
TABLE 3-8 GHG EMISSION CALCULATIONS - AUXILIARY BOILER 27
TABLE 3-9 GHG EMISSION CALCULATIONS - NATURAL GAS PIPING 28
TABLE 3-10 GASEOUS FUEL VENTING DURING TURBINE SHUTDOWN/MAINTENANCE AND SMALL EQUIPMENT AND FUGITIVE COMPONENT REPAIR/REPLACEMENT 29
TABLE 3-11 GHG EMISSION CALCULATIONS - EMERGENCY ENGINES 30

US EPA ARCHIVE DOCUMENT

TABLE 3-12 GHG EMISSION CALCULATIONS - ELECTRICAL EQUIPMENT INSULATED WITH SF6 31
4.0 PREVENTION OF SIGNIFICANT DETERIORATION APPLICABILITY 32
TCEQ PSD NETTING TABLES 33
5.0 BEST AVAILABLE CONTROL TECHNOLOGY (BACT) 36
5.1 BACT for the Combined Cycle Combustion Turbine 37
5.1.1 Step 1: Identify All Available Control Technologies 37
5.1.2 Step 2: Eliminate Technically Infeasible Options 43
5.1.3 Step 3: Rank Remaining Control Technologies 44
5.1.4 Step 4: Evaluate Most Effective Controls and Document Results 44
5.1.5 Step 5: Select BACT 48
5.2 BACT for SF_6 Insulated Electrical Equipment 55
5.2.1 Step 1: Identify All Available Control Technologies 55
5.2.2 Step 2: Eliminate Technically Infeasible Options 55
5.2.3 Step 3: Rank Remaining Control Technologies 55
5.2.4 Step 4: Evaluate Most Effective Controls and Document Results 56
5.2.5 Step 5: Select BACT 56
5.3 BACT for Auxiliary Boiler 56
5.3.1 Step 1: Identify All Available Control Technologies 56
5.3.2 Step 2: Eliminate Technically Infeasible Options 57
5.3.3 Step 3: Rank Remaining Control Technologies 57
5.3.4 Step 4: Evaluate Most Effective Controls and Document Results 57
5.3.5 Step 5: Select BACT 58
5.4 BACT for Emergency Engines 58
5.4.1 Step 1: Identify All Available Control Technologies 58
5.4.2 Step 2: Eliminate Technically Infeasible Options 59
5.4.3 Step 3: Rank Remaining Control Technologies 59
5.4.4 Step 4: Evaluate Most Effective Controls and Document Results 60
5.4.5 Step 5: Select BACT 60
5.5 BACT for Natural Gas Fugitives 60
5.5.1 Step 1: Identify All Available Control Technologies 60
5.5.2 Step 2: Eliminate Technically Infeasible Options 60
5.5.3 Step 3: Rank Remaining Control Technologies 60
5.5.4 Step 4: Evaluate Most Effective Controls and Document Results 61
5.5.5 Step 5: Select BACT 61
MAP OF EXISTING CO_2 PIPELINES AND POTENTIAL GEOLOGIC STORAGE SITES IN TEXAS 62
TABLE 5-1 CALCULATION OF DESIGN HEAT RATE FOR GE 7FA 63
TABLE 5-2 CALCULATION OF DESIGN HEAT RATE FOR SIEMENS SGT6-5000F(4) 64
TABLE 5-3 CALCULATION OF DESIGN HEAT RATE FOR SIEMENS SGT6-5000F(5) 65
6.0 OTHER PSD REQUIREMENTS 66
6.1 Impacts Analysis 66

US EPA ARCHIVE DOCUMENT

6.2 GHG Preconstruction Monitoring 66
6.3 Additional Impacts Analysis 66
7.0 PROPOSED GHG MONITORING PROVISIONS 68

APPENDICES

APPENDIX A: GHG PSD APPLICABILITY FLOWCHART – NEW SOURCES

US EPA ARCHIVE DOCUMENT

1.0 INTRODUCTION

La Paloma Energy Center, LLC (La Paloma) is hereby submitting this application for a Greenhouse Gas (GHG) Prevention of Significant Deterioration (PSD) air quality permit for the construction of a new combined cycle electric generating plant, La Paloma Energy Center (LPEC), in Cameron County, Texas. LPEC will consist of two natural gas-fired combustion turbines, each exhausting to a fired heat recovery steam generator (HRSG) to produce steam to drive a shared steam turbine. Three models of combustion turbines are being considered for this site: the General Electric 7FA, the Siemens SGT6-5000F(4), and the Siemens SGT6-5000F(5). The final selection of the combustion turbine model will not be made until after the permit is issued. The State and PSD air permit application for non-GHG pollutants was submitted to the Texas Commission on Environmental Quality (TCEQ) on March 15, 2012.

The General Electric 7FA combustion turbine has a maximum base-load electric power output of approximately 183 MW, the Siemens SGT6-5000F(4) is approximately 205 MW, and the Siemens SGT6-5000F(5) is approximately 232 MW. The maximum electric power output from the steam turbine is approximately 271 MW for both the GE and Siemens configurations. All three combustion turbines are F-Class turbines.

On June 3, 2010, the EPA published final rules for permitting sources of GHGs under the PSD and Title V air permitting programs, known as the GHG Tailoring Rule.[1] After July 1, 2011, new sources having the potential to emit more than 100,000 tons/yr of GHGs and modifications increasing GHG emissions more than 75,000 tons/yr on a carbon dioxide equivalent (CO_2e) basis at existing major sources are subject to GHG PSD review, regardless of whether PSD was triggered for other pollutants.

On December 23, 2010, EPA issued a Federal Implementation Plan (FIP) authorizing EPA to issue PSD permits in Texas for GHG sources until Texas submits the required SIP revision for GHG permitting and it is approved by EPA.[2]

The LPEC project for construction of two combined cycle power plant units triggers PSD review for GHG regulated pollutants because the project will increase GHG emissions by more than 100,000 tons/yr. Included in this application are a project scope description, GHG emissions calculations, GHG netting analysis, and a GHG Best Available Control Technology (BACT) analysis.

[1] 75 FR 31514 (June 3, 2010).

[2] 75 FR 81874 (Dec. 29, 2010).

US EPA ARCHIVE DOCUMENT

Texas Commission on Environmental Quality
Form PI-1 General Application for
Air Preconstruction Permit and Amendment

Important Note: The agency **requires** that a Core Data Form be submitted on all incoming applications unless a Regulated Entity and Customer Reference Number have been issued *and* no core data information has changed. For more information regarding the Core Data Form, call (512) 239-5175 or go to www.tceq.texas.gov/permitting/central_registry/guidance.html.

I. Applicant Information		
A. Company or Other Legal Name: La Paloma Energy Center, LLC		
Texas Secretary of State Charter/Registration Number (*if applicable*): 5108003		
B. Company Official Contact Name: Gary Neus		
Title: EVP		
Mailing Address: 4011 West Plano Parkway, Suite 128		
City: Plano	State: TX	ZIP Code: 75093
Telephone No.: 281-682-8448	Fax No.: 972-964-0807	E-mail Address: gneus@coronado-ventures.com
C. Technical Contact Name: Gary Neus		
Title: EVP		
Company Name: La Paloma Energy Center, LLC		
Mailing Address: 4011 West Plano Parkway, Suite 128		
City: Plano	State: TX	ZIP Code: 75093
Telephone No.: 281-682-8448	Fax No.: 972-964-0807	E-mail Address:gneus@coronado-ventures.com
D. Site Name: La Paloma Energy Center		
E. Area Name/Type of Facility: Electric Generating Facility		☒ Permanent ☐ Portable
F. Principal Company Product or Business: Generation of Electricity		
Principal Standard Industrial Classification Code (SIC): 4911		
Principal North American Industry Classification System (NAICS): 221112		
G. Projected Start of Construction Date: 06/01/2013		
Projected Start of Operation Date: 10/01/2015		
H. Facility and Site Location Information (If no street address, provide clear driving directions to the site in writing.):		
Street Address: 24684 FM 1595		
City/Town: Harlingen	County: Cameron	ZIP Code: 78550
Latitude (nearest second): 26 12 58.9	Longitude (nearest second): 97 37 41.02	

US EPA ARCHIVE DOCUMENT

I. Applicant Information (continued)	
I. Account Identification Number (leave blank if new site or facility):	
J. Core Data Form.	
Is the Core Data Form (Form 10400) attached? If *No*, provide customer reference number and regulated entity number (complete K and L).	☒ YES ☐ NO
K. Customer Reference Number (CN):	
L. Regulated Entity Number (RN):	
II. General Information	
A. Is confidential information submitted with this application? If *Yes*, mark each **confidential** page **confidential** in large red letters at the bottom of each page.	☐ YES ☒ NO
B. Is this application in response to an investigation or enforcement action? If *Yes*, attach a copy of any correspondence from the agency.	☐ YES ☒ NO
C. Number of New Jobs: 50	
D. Provide the name of the State Senator and State Representative and district numbers for this facility site:	
Senator: Eddy Lucio	District No.: 27
Representative: J. M. Lozano	District No.: 38
III. Type of Permit Action Requested	
A. Mark the appropriate box indicating what type of action is requested. Initial ☒ Amendment ☐ Revision (30 TAC 116.116(e)) ☐ Change of Location ☐ Relocation ☐	
B. Permit Number (if existing):	
C. Permit Type: Mark the appropriate box indicating what type of permit is requested. *(check all that apply, skip for change of location)* Construction ☒ Flexible ☐ Multiple Plant ☐ Nonattainment ☐ Prevention of Significant Deterioration ☒ Hazardous Air Pollutant Major Source ☐ Plant-Wide Applicability Limit ☐ Other:_____	
D. Is a permit renewal application being submitted in conjunction with this amendment in accordance with 30 TAC 116.315(c).	☐ YES ☒ NO

US EPA ARCHIVE DOCUMENT

III. Type of Permit Action Requested (continued)			
E. Is this application for a change of location of previously permitted facilities? If Yes, complete III.E.1 - III.E.4.			☐ YES ☒ NO
1. Current Location of Facility (If no street address, provide clear driving directions to the site in writing.):			
Street Address:			
City:	County:	ZIP Code:	
2. Proposed Location of Facility (If no street address, provide clear driving directions to the site in writing.):			
Street Address:			
City:	County:	ZIP Code:	
3. Will the proposed facility, site, and plot plan meet all current technical requirements of the permit special conditions? If *No*, attach detailed information.			☐ YES ☐ NO
4. Is the site where the facility is moving considered a major source of criteria pollutants or HAPs?			☐ YES ☐ NO
F. Consolidation into this Permit: List any standard permits, exemptions or permits by rule to be consolidated into this permit including those for planned maintenance, startup, and shutdown.			
List: none			
G. Are you permitting planned maintenance, startup, and shutdown emissions? If *Yes*, attach information on any changes to emissions under this application as specified in VII and VIII.			☒ YES ☐ NO
H. Federal Operating Permit Requirements (30 TAC Chapter 122 Applicability)			
Is this facility located at a site required to obtain a federal operating permit? If *Yes*, list all associated permit number(s), attach pages as needed).			☒ YES ☐ NO ☐ To be determined
Associated Permit No (s.):			
1. Identify the requirements of 30 TAC Chapter 122 that will be triggered if this application is approved. FOP Significant Revision ☐ FOP Minor ☐ Application for an FOP Revision ☐ To Be Determined ☒ Operational Flexibility/Off-Permit Notification ☐ Streamlined Revision for GOP ☐ None ☐			

US EPA ARCHIVE DOCUMENT

III. Type of Permit Action Requested (continued)	
H. Federal Operating Permit Requirements (30 TAC Chapter 122 Applicability) *(continued)*	
2. Identify the type(s) of FOP(s) issued and/or FOP application(s) submitted/pending for the site. (check all that apply)	
GOP Issued ☐ GOP application/revision application submitted or under APD review ☐	
SOP Issued ☐ SOP application/revision application submitted or under APD review ☐	
IV. Public Notice Applicability	
A. Is this a new permit application or a change of location application?	☒ YES ☐ NO
B. Is this application for a concrete batch plant? If Yes, complete V.C.1 – V.C.2.	☐ YES ☒ NO
C. Is this an application for a major modification of a PSD, nonattainment, FCAA 112(g) permit, or exceedance of a PAL permit?	☐ YES ☒ NO
D. Is this application for a PSD or major modification of a PSD located within 100 kilometers of an affected state?	☐ YES ☒ NO
If *Yes*, list the affected state(s).	
E. Is this a state permit amendment application? If Yes, complete IV.E.1. – IV.E.3.	
1. Is there any change in character of emissions in this application?	☐ YES ☐ NO
2. Is there a new air contaminant in this application?	☐ YES ☐ NO
3. Do the facilities handle, load, unload, dry, manufacture, or process grain, seed, legumes, or vegetables fibers (agricultural facilities)?	☐ YES ☐ NO
F. List the total annual emission increases associated with the application (*list* **all** *that apply and attach additional sheets as needed*):	
Volatile Organic Compounds (VOC): 155.9 ton/yr	
Sulfur Dioxide (SO_2): 15.7 ton/yr	
Carbon Monoxide (CO): 420.7 ton/yr	
Nitrogen Oxides (NO_x): 263.3 ton/yr	
Particulate Matter (PM): 278.5 ton/yr	
PM $_{10}$ microns or less (PM_{10}): 247.1 ton/yr	
PM $_{2.5}$ microns or less ($PM_{2.5}$): 240.2 ton/yr	
Lead (Pb):	
Hazardous Air Pollutants (HAPs): < 10 tons/yr for individual HAP and < 25 ton/yr for all HAPs	
Other speciated air contaminants **not** listed above: 261.1 ton/yr NH3; 7.9 ton/yr HSO4;10.7 ton/yr (NH4)2SO4	

US EPA ARCHIVE DOCUMENT

V. Public Notice Information (complete if applicable)		
A. Public Notice Contact Name: Gary Neus		
Title: EVP		
Mailing Address: 4011 West Plano Parkway, Suite 128		
City: Plano	State: TX	ZIP Code: 75093
B. Name of the Public Place: Harlingen Public Library		
Physical Address (No P.O. Boxes): 410 76 Drive		
City: Harlingen	County: Cameron	ZIP Code: 78550
The public place has granted authorization to place the application for public viewing and copying.		☒ YES ☐ NO
The public place has internet access available for the public.		☒ YES ☐ NO
C. Concrete Batch Plants, PSD, and Nonattainment Permits		
1. County Judge Information (For Concrete Batch Plants and PSD and/or Nonattainment Permits) for this facility site.		
The Honorable: Carlos H. Cascos		
Mailing Address: 1100 E. Monroe St., Dancy Building, Second Floor		
City: Harlingen	State: Texas	ZIP Code: 78520
2. Is the facility located in a municipality or an extraterritorial jurisdiction of a municipality? *(For Concrete Batch Plants)*		☐ YES ☐ NO
Presiding Officers Name(s):		
Title:		
Mailing Address:		
City:	State:	ZIP Code:
3. Provide the name, mailing address of the chief executives of the city and county, Federal Land Manager, or Indian Governing Body for the location where the facility is or will be located.		
Chief Executive: Mayor Chris Boswell		
Mailing Address: 515 E. Harrison, Ste. A		
City: Harlingen	State: Texas	ZIP Code: 78550
Name of the Federal Land Manager: N/A		
Title:		
Mailing Address:		
City:	State:	ZIP Code:

US EPA ARCHIVE DOCUMENT

V. Public Notice Information (complete if applicable) (continued)		
3. Provide the name, mailing address of the chief executives of the city and county, State, Federal Land Manager, or Indian Governing Body for the location where the facility is or will be located. *(continued)*		
Name of the Indian Governing Body: N/A		
Title:		
Mailing Address:		
City:	State:	ZIP Code:
D. Bilingual Notice		
Is a bilingual program **required** by the Texas Education Code in the School District?		☒ YES ☐ NO
Are the children who attend either the elementary school or the middle school closest to your facility eligible to be enrolled in a bilingual program provided by the district?		☒ YES ☐ NO
If *Yes*, list which languages are required by the bilingual program? Spanish		

VI. Small Business Classification (Required)	
A. Does this company (including parent companies and subsidiary companies) have fewer than 100 employees or less than $6 million in annual gross receipts?	☒ YES ☐ NO
B. Is the site a major stationary source for federal air quality permitting?	☒ YES ☐ NO
C. Are the site emissions of any regulated air pollutant greater than or equal to 50 tpy?	☒ YES ☐ NO
D. Are the site emissions of all regulated air pollutants combined less than 75 tpy?	☐ YES ☒ NO

VII. Technical Information
A. The following information must be submitted with your Form PI-1 (this is just a checklist to make sure you have included everything)
1. Current Area Map ☒
2. Plot Plan ☒
3. Existing Authorizations ☒
4. Process Flow Diagram ☒
5. Process Description ☒
6. Maximum Emissions Data and Calculations ☒
7. Air Permit Application Tables ☒
a. Table 1(a) (Form 10153) entitled, Emission Point Summary ☒
b. Table 2 (Form 10155) entitled, Material Balance ☒
c. Other equipment, process or control device tables ☒

US EPA ARCHIVE DOCUMENT

VII. Technical Information				
B.	Are any schools located within 3,000 feet of this facility?			☐ YES ☒ NO
C.	Maximum Operating Schedule:			
Hours: 24 hr/day	Day(s): 7 day/week	Week(s): 52 week/year	Year(s): 8,760 hr/year	
Seasonal Operation? If Yes, please describe in the space provide below.				☐ YES ☒ NO
D.	Have the planned MSS emissions been previously submitted as part of an emissions inventory?			☒ YES ☐ NO
Provide a list of each planned MSS facility or related activity and indicate which years the MSS activities have been included in the emissions inventories. Attach pages as needed.				
MSS activities are listed on Tables A-16 and A-17 of the attached application.				
This is a new site and there have been no previous emission inventories.				
E.	Does this application involve any air contaminants for which a *disaster review* is required?			☐ YES ☒ NO
F.	Does this application include a pollutant of concern on the *Air Pollutant Watch List (APWL)*?			☐ YES ☒ NO
VIII. State Regulatory Requirements **Applicants must demonstrate compliance with all applicable state regulations to obtain a permit or amendment**. *The application must contain detailed attachments addressing applicability or non applicability; identify state regulations; show how requirements are met; and include compliance demonstrations.*				
A.	Will the emissions from the proposed facility protect public health and welfare, and comply with all rules and regulations of the TCEQ?			☒ YES ☐ NO
B.	Will emissions of significant air contaminants from the facility be measured?			☒ YES ☐ NO
C.	Is the Best Available Control Technology (BACT) demonstration attached?			☒ YES ☐ NO
D.	Will the proposed facilities achieve the performance represented in the permit application as demonstrated through recordkeeping, monitoring, stack testing, or other applicable methods?			☒ YES ☐ NO
IX. Federal Regulatory Requirements **Applicants must demonstrate compliance with all applicable federal regulations to obtain a permit or amendment** *The application must contain detailed attachments addressing applicability or non applicability; identify federal regulation subparts; show how requirements are met; and include compliance demonstrations.*				
A.	Does Title 40 Code of Federal Regulations Part 60, (40 CFR Part 60) New Source Performance Standard (NSPS) apply to a facility in this application?			☒ YES ☐ NO
B.	Does 40 CFR Part 61, National Emissions Standard for Hazardous Air Pollutants (NESHAP) apply to a facility in this application?			☐ YES ☒ NO
C.	Does 40 CFR Part 63, Maximum Achievable Control Technology (MACT) standard apply to a facility in this application?			☒ YES ☐ NO

US EPA ARCHIVE DOCUMENT

IX. Federal Regulatory Requirements **Applicants must demonstrate compliance with all applicable federal regulations to obtain a permit or amendment** ***The application must contain detailed attachments addressing applicability or non applicability; identify federal regulation subparts; show how requirements are met; and include compliance demonstrations.***		
D.	Do nonattainment permitting requirements apply to this application?	☐ YES ☒ NO
E.	Do prevention of significant deterioration permitting requirements apply to this application?	☒ YES ☐ NO
F.	Do Hazardous Air Pollutant Major Source [FCAA 112(g)] requirements apply to this application?	☐ YES ☒ NO
G.	Is a Plant-wide Applicability Limit permit being requested?	☐ YES ☒ NO
X. Professional Engineer (P.E.) Seal		
Is the estimated capital cost of the project greater than $2 million dollars?		☒ YES ☐ NO
If *Yes*, submit the application under the seal of a Texas licensed P.E.		
XI. Permit Fee Information		
Check, Money Order, Transaction Number ,ePay Voucher Number: 1007		Fee Amount: $75,000
Company name on check: Coronado Power Investments 1 LLC		Paid online?: ☐ YES ☐ NO
Is a copy of the check or money order attached to the original submittal of this application?		☒ YES ☐ NO ☐ N/A
Is a Table 30 (Form 10196) entitled, Estimated Capital Cost and Fee Verification, attached?		☒ YES ☐ NO ☐ N/A

US EPA ARCHIVE DOCUMENT

XII. Delinquent Fees and Penalties

This form **will not be processed** until all delinquent fees and/or penalties owed to the TCEQ or the Office of the Attorney General on behalf of the TCEQ is paid in accordance with the Delinquent Fee and Penalty Protocol. For more information regarding Delinquent Fees and Penalties, go to the TCEQ Web site at: www.tceq.texas.gov/agency/delin/index.html.

XIII. Signature

The signature below confirms that I have knowledge of the facts included in this application and that these facts are true and correct to the best of my knowledge and belief. I further state that to the best of my knowledge and belief, the project for which application is made will not in any way violate any provision of the Texas Water Code (TWC), Chapter 7, Texas Clean Air Act (TCAA), as amended, or any of the air quality rules and regulations of the Texas Commission on Environmental Quality or any local governmental ordinance or resolution enacted pursuant to the TCAA I further state that I understand my signature indicates that this application meets all applicable nonattainment, prevention of significant deterioration, or major source of hazardous air pollutant permitting requirements. The signature further signifies awareness that intentionally or knowingly making or causing to be made false material statements or representations in the application is a criminal offense subject to criminal penalties.

Name: Gary News

Signature: Gary News

Original Signature Required

Date: 3/15/2012

2.0 PROJECT SCOPE

2.1 INTRODUCTION

With this application, La Paloma is seeking authorization to construct a new combined cycle electric generating plant, LPEC, in Cameron County, Texas. The power generating equipment, as well as ancillary equipment that will be sources of GHG emissions at the site, are listed below:

- Two natural gas-fired combustion turbines equipped with lean pre-mix low-NO_x combustors
- Two natural gas-fired duct burner systems
- Natural gas piping and metering
- One diesel fuel-fired emergency electrical generator engine
- One diesel fuel-fired fire water pump engine
- One natural gas-fired auxiliary boiler
- Electrical equipment insulated with sulfur hexafluoride (SF_6)

A process flow diagram is included at the end of this section.

The business purpose of the LPEC is to generate 637 - 735 megawatts (MW), of gross electrical power near the City of Harlingen in an efficient manner while increasing the reliability of the electrical supply for the State of Texas. One of the factors in siting the plant is the availability of reclaimed water from the City of Harlingen to be used as cooling water at the plant. Pipeline natural gas is chosen as the only fuel for the combustion turbines and duct burner systems due to local availability of fuel and infrastructure to support delivery of the fuel to the facility in adequate volume and pressure.

2.2 COMBUSTION TURBINE GENERATOR

The plant will consist of two identical natural gas-fired combustion turbine generators (CTGs), with three models being considered: the General Electric 7FA, the Siemens SGT6-5000F(4), and the Siemens SGT6-5000F(5). The final selection of the combustion turbine model will likely be made after the permit is issued. Each combustion turbine will exhaust to an HRSG. Emission point numbers (EPNs) for the combustion turbine/HRSG units are identified as U1-STK and U2-STK.

The combustion turbine will burn pipeline natural gas to rotate an electrical generator to generate electricity. The main components of a combustion turbine generator consist of a compressor, combustor, turbine, and generator. The compressor pressurizes combustion air to the combustor where the fuel is mixed with the combustion air and burned. Hot exhaust gases then enter the turbine where the gases expand across the turbine blades, driving a shaft to power an electric generator. The exhaust gas will exit the combustion turbine and be routed to the HRSG for steam production.

US EPA ARCHIVE DOCUMENT

US EPA ARCHIVE DOCUMENT

2.3 HEAT RECOVERY STEAM GENERATOR

Heat recovered in the HRSG will be utilized to produce steam. Steam generated within the HRSG will be utilized to drive a steam turbine and associated electrical generator. The HRSG will be equipped with duct burners for supplemental steam production. The duct burners will be fired with pipeline-quality natural gas. The duct burners have a maximum heat input capacity of 750 MMBtu/hr per unit. The exhaust gases from the unit, including emissions from the CT and the duct burners, will exit through a stack to the atmosphere.

The normal duct burner operation will vary from 0 to 100 percent of the maximum capacity. Duct burners will be located in the HRSG prior to the selective catalytic reduction system.

Steam produced by each of the two HRSGs will be routed to the steam turbine (FIN STG-1). The two combustion turbines and one steam turbine will be coupled to electric generators to produce electricity for sale to the Electric Reliability Council of Texas power grid. Each GE combustion turbine model has a maximum base-load electric power output of approximately 183 MW, the Siemens SGT6-5000F(4) is approximately 205 MW, and the Siemens SGT6-5000F(5) is approximately 232 MW. The maximum electric power output from the steam turbine is approximately 271 MW for both the GE and Siemens configurations.

The units may operate at reduced load to respond to changes in system power requirements and/or stability.

2.4 AUXILIARY BOILER

One auxiliary boiler (EPN AUXBLR) will be available to facilitate startup of the combined cycle units. The auxiliary boiler will have a maximum heat input of 150 MMBtu/hr and will burn pipeline natural gas. The auxiliary boiler could operate up to 876 hours per year.

2.5 DIESEL FIRED EMERGENCY EQUIPMENT

The site will be equipped with one nominally rated 1,072-hp diesel-fired emergency generator (EPN: EMGEN1-STK) to provide electricity to the facility in case of power failure. A nominally rated 500-hp diesel-fired pump (EPN: ENG-FWMAIN) will be installed at the site to provide water in the event of a fire. Each emergency engine will be limited to 100 hours operation per year for purposes of maintenance checks and readiness testing.

2.6 NATURAL GAS/FUEL GAS PIPING

Natural gas will be delivered to the site via pipeline. Gas will be metered and piped to the new combustion turbines and duct burners. Project fugitive emissions from the gas piping components associated with the new CTG/HRSG units will include emissions of methane (CH_4) and carbon dioxide (CO_2). The natural gas piping is designated as EPN NG-FUG.

2.7 ELECTRICAL EQUIPMENT INSULATED WITH SULFUR HEXAFLUORIDE (SF_6)

The generator circuit breakers associated with the proposed units will be insulated with SF_6. SF_6 is a colorless, odorless, non-flammable gas. It is a fluorinated compound that has an extremely stable molecular structure. The unique chemical properties of SF_6 make it an efficient electrical insulator. The gas is used for electrical insulation, arc quenching, and current interruption in high-voltage electrical equipment. SF_6 is only used in sealed and safe systems which under normal circumstances do not leak gas. The capacity of the circuit breakers associated with the proposed plant is currently estimated to be 400 lb of SF_6.

The proposed circuit breaker at the generator output will have a low pressure alarm and a low pressure lockout. The alarm will alert operating personnel of any leakage in the system and the lockout prevents any operation of the breaker due to lack of “quenching and cooling” SF_6 gas.

US EPA ARCHIVE DOCUMENT

US EPA ARCHIVE DOCUMENT

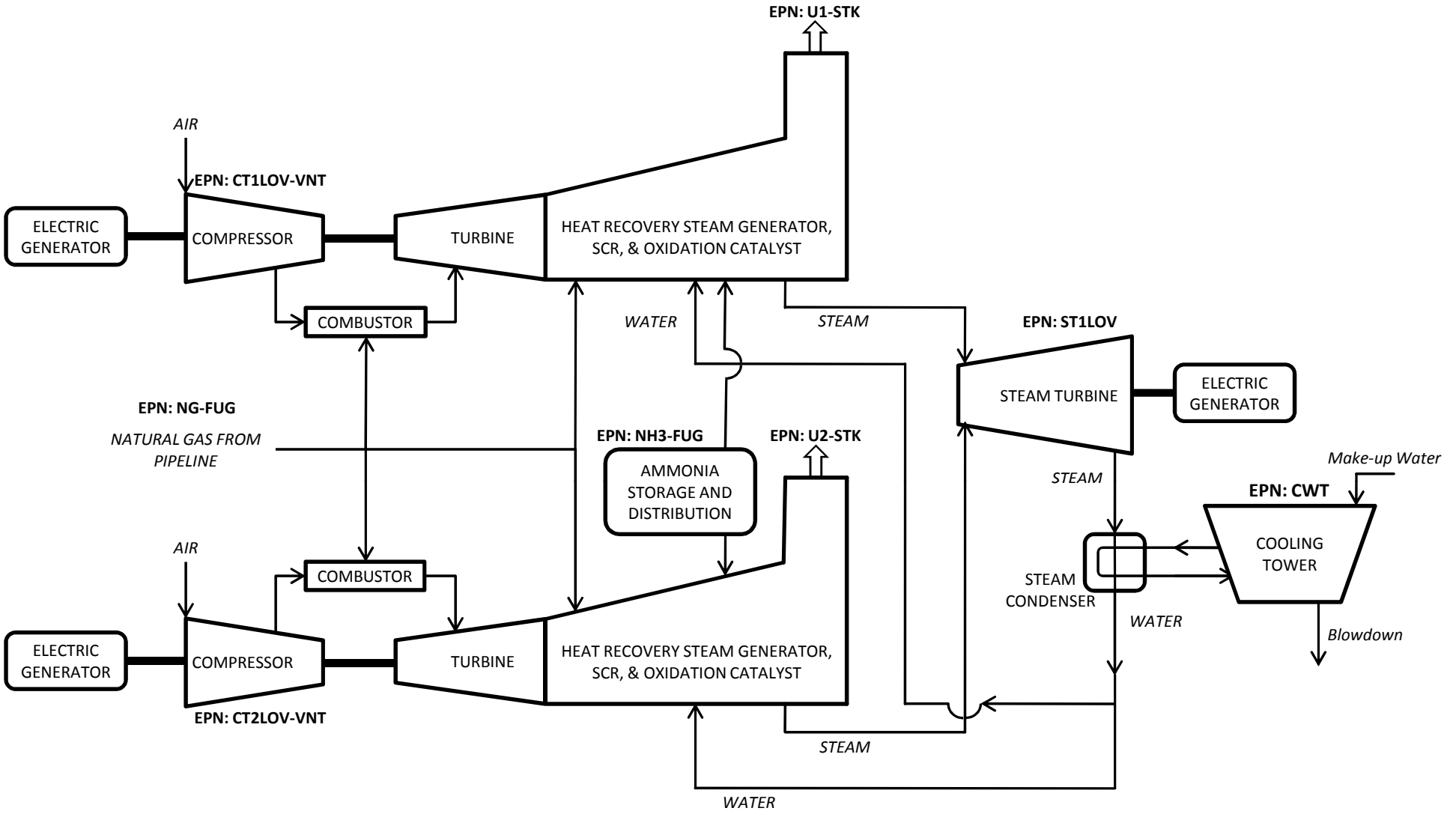

LA PALOMA ENERGY CENTER			PROCESS FLOW DIAGRAM		
Permit Application			Filename: PFD 2012-03-14.xls		
zephyr	Drawn by: E Rapier	Checked by: L Moon	Project No.: 011368	Date: 3/14/2012	Sheet: 1 of 1

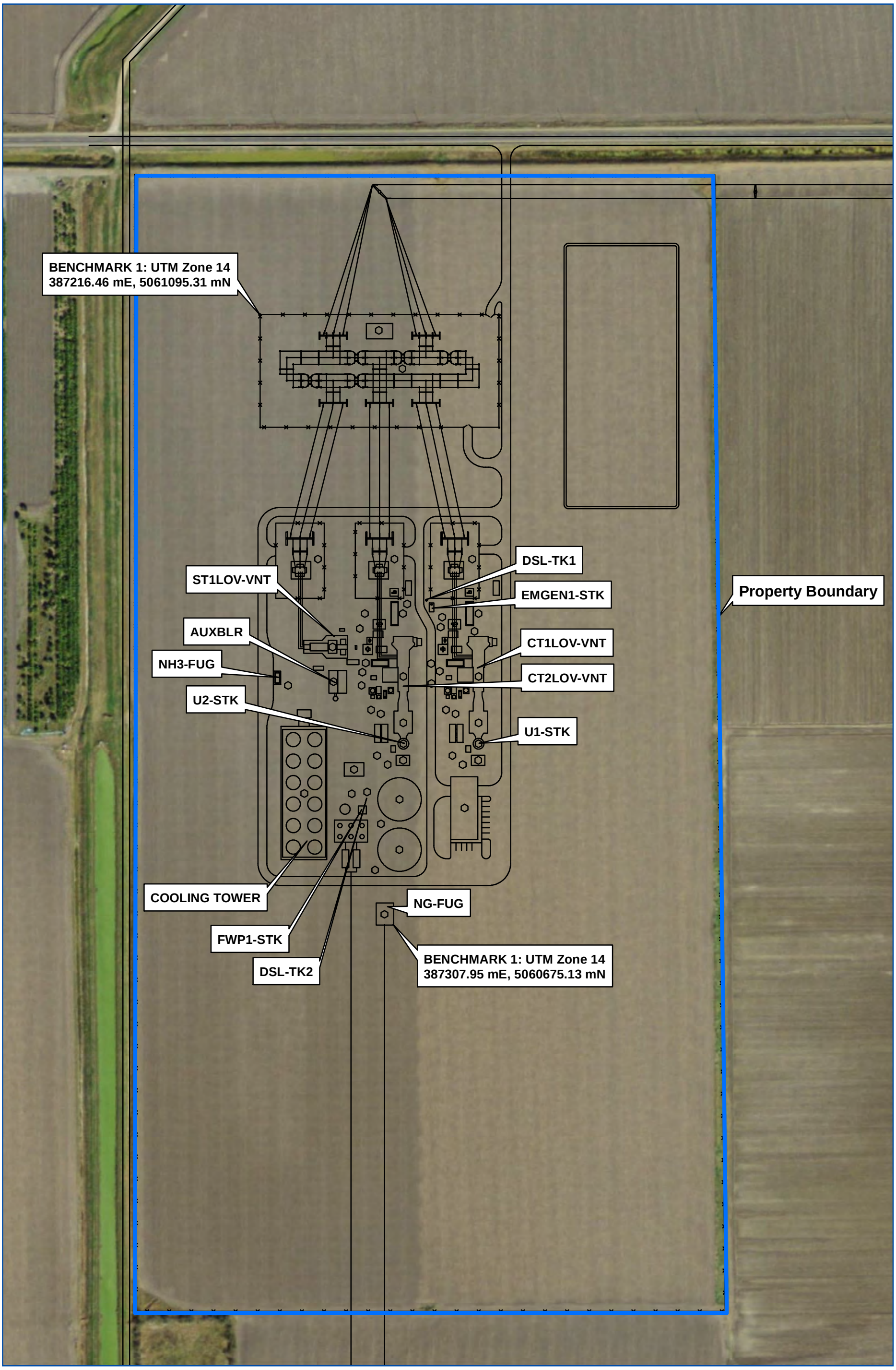

Scale 1:2,500 1 in = 208 ft

0 75 150 Meters

0 250 500 Feet

N

Data Sources:
ESRI i-cubed imagery; Coronado Ventures
Coordinate System:
NAD83 SP TX South FIPS 4205 Feet

zephyr

PLOT PLAN
La Paloma Energy Center
Harlingen, TX

H:\Coronado Ventures\011368 Harlingen NSR Application\Graphics\Plot Plan

Drafted by:	Reviewed by:	Project No.:	Date:
J. Knowles	L. Moon	11368	03/09/2012

US EPA ARCHIVE DOCUMENT

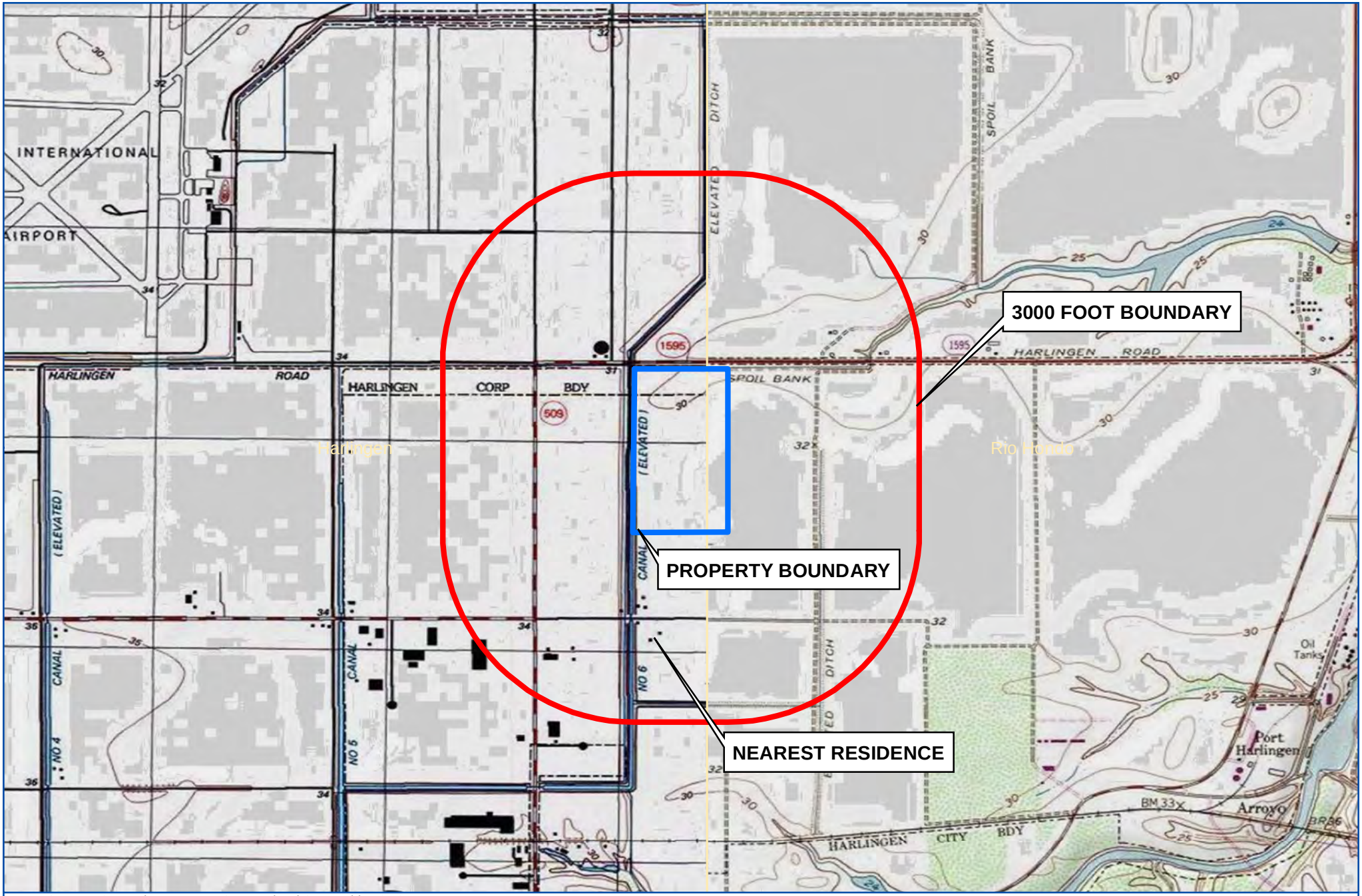

Data Sources: Coronado Ventures; ESRI - National Geographic TOPO

Scale 1:24,000 1 inch = 2,000 feet

0 0.5 1 Kilometers

0 0.5 1 Miles

N

zephyr

AREA MAP
La Paloma Energy Center - Harlingen,Texas

H:\Coronado Ventures\011368 Harlingen NSR Application\Graphics\Area Map

Drafted By:	Reviewed by:	Project No.:	Date:
J. Knowles	E. Rapier	11368.001	03/06/2012

3.0 GHG EMISSION CALCULATIONS

3.1 GHG EMISSIONS FROM COMBINED CYCLE COMBUSTION TURBINE

GHG emissions for the combustion turbines and HRSG are calculated in accordance with the procedures in the Mandatory Greenhouse Reporting Rules, Subpart D – Electric Generation.[3] Annual CO_2 emissions are calculated using the methodology in equation G-4 of the Acid Rain Rules.[4]

$$W_{CO_2} = \left(\frac{F_C \times H \times U_f \times MW_{CO_2}}{2000} \right) \qquad (Eq.\ G\text{–}4)$$

Where:

W_{CO2}= CO_2 emitted from combustion, tons/yr.

MW $_{CO2}$= Molecular weight of carbon dioxide, 44.0 lb/lb-mole.

F_c= Carbon based F-factor, 1040 scf/MMBtu for natural gas.

H = Annual heat input in MMBtu.

Uf = 1/385 scf CO_2/lb-mole at 14.7 psia and 68 °F.

Emissions of CH_4 and nitrous oxide (N_2O) are calculated using the emission factors (kg/MMBtu) for natural gas combustion from Table C-2 of the Mandatory Greenhouse Gas Reporting Rules.[5] The global warming potential factors used to calculate carbon dioxide equivalent (CO_2e) emissions are based on Table A-1 of the Mandatory Greenhouse Gas Reporting Rules.

A separate set of turbine/HRSG calculations is provided for each of the three models being considered: the General Electric 7FA, the Siemens SGT6-5000F(4), and the Siemens SGT6-5000F(5). Calculations of GHG emissions from the combined cycle turbines are presented on Tables 3-2, 3-3, 3-4, 3-5, 3-6, and 3-7.

3.2 AUXILIARY BOILER

CO_2 emissions from the natural-gas-fired auxiliary boilers are calculated using the emission factors (kg/MMBtu) for natural gas from Table C-1 of the Mandatory Greenhouse Gas Reporting

[3] 40 C.F.R. 98, Subpart D – *Electricity Generation*

[4] 40 C.F.R. 75, Appendix G – *Determination of CO_2 Emissions*

[5] *Default CH_4 and N_2O Emission Factors for Various Types of Fuel*, 40 C.F.R. 98, Subpt. C, Tbl. C-2

US EPA ARCHIVE DOCUMENT

Rules.[6] CH_4 and N_2O emissions from the auxiliary boilers are calculated using the emission factors (kg/MMBtu) for natural gas from Table C-2 of the Mandatory Greenhouse Gas Reporting Rules.[7] The global warming potential factors used to calculate CO_2e emissions are based on Table A-1 of the Mandatory Greenhouse Gas Reporting Rules.[8]

Calculations of GHG emissions from the auxiliary boiler are presented on Table 3-8.

3.3 GHG EMISSIONS FROM NATURAL GAS/FUEL GAS PIPING FUGITIVES AND NATURAL GAS/FUEL GAS MAINTENANCE AND STARTUP/SHUTDOWN RELATED RELEASES

GHG emission calculations for natural gas/fuel gas piping component fugitive emissions are based on emission factors from Table W-1A of the proposed "2012 Technical Corrections, Clarifying and Other Amendments to the Greenhouse Gas Reporting Rule, and Proposed Confidentiality Determinations for Certain Data Elements of the Fluorinated Gas Source Category"[9]. The concentrations of CH_4 and CO_2 in the natural gas are based on a typical natural gas analysis. Since the CH_4 and CO_2 content of natural gas is variable, the concentrations of CH_4 and CO_2 from the typical natural gas analysis are used as a worst case estimate. The global warming potential factors used to calculate CO_2e emissions are based on Table A-1 of the Mandatory Greenhouse Gas Reporting Rules.[10]

GHG emission calculations for releases of natural gas related to piping maintenance and turbine startup/shutdowns are calculated using the same CH_4 and CO_2 concentrations as natural gas/fuel gas piping fugitives.

Calculations of GHG emissions from natural gas piping fugitives is presented on Table 3-9. Calculations of GHG emissions from releases of natural gas related to piping maintenance and turbine startup/shutdowns is presented on Table 3-10.

3.4 GHG EMISSIONS FROM DIESEL FIRED EMERGENCY ENGINES

CO_2 emission calculations from the diesel-fired emergency generator and fire pump engine are calculated using the emission factors (kg/MMBtu) for Distillate Fuel Oil No. 2 from Table C-1 of the Mandatory Greenhouse Gas Reporting Rules.[11] CH_4 and N_2O emission calculations from the diesel-fired engines are calculated using the emission factors (kg/MMBtu) for Petroleum from Table C-2 of the Mandatory Greenhouse Gas Reporting Rules.[12] The global warming

[6] *Default CO_2 Emission Factors and High Heat Values for Various Types of Fuel*, 40 C.F.R. 98, Subpt. C, Tbl. C-1

[7] *Default CH_4 and N_2O Emission Factors for Various Types of Fuel*, 40 C.F.R. 98, Subpt. C, Tbl. C-2

[8] *Global Warming Potentials*, 40 C.F.R. Pt. 98, Subpt. A, Tbl. A-1.

[9] 77 FR 29935 (May 21, 2012).

[10] *Global Warming Potentials*, 40 C.F.R. Pt. 98, Subpt. A, Tbl. A-1.

[11] *Default CO_2 Emission Factors and High Heat Values for Various Types of Fuel*, 40 C.F.R. 98, Subpt. C, Tbl. C-1

[12] *Default CH_4 and N_2O Emission Factors for Various Types of Fuel*, 40 C.F.R. 98, Subpt. C, Tbl. C-2

US EPA ARCHIVE DOCUMENT

potential factors used to calculate CO_2e emissions are based on Table A-1 of the Mandatory Greenhouse Gas Reporting Rules.[13]

Calculations of GHG emissions from the emergency engines are presented on Table 3-11.

3.5 GHG EMISSIONS FROM ELECTRICAL EQUIPMENT INSULATED WITH SF_6

SF_6 emissions from the new generator circuit breaker and yard breaker associated with the proposed units are calculated using a predicted SF_6 annual leak rate of 0.5% by weight. The global warming potential factors used to calculate CO_2e emissions are based on Table A-1 of the Mandatory Greenhouse Gas Reporting Rules.[14]

Calculations of GHG emissions from electrical equipment insulated with SF_6 are presented on Table 3-12.

[13] *Global Warming Potentials*, 40 C.F.R. Pt. 98, Subpt. A, Tbl. A-1.

[14] *Global Warming Potentials*, 40 C.F.R. Pt. 98, Subpt. A, Tbl. A-1.

US EPA ARCHIVE DOCUMENT

US EPA ARCHIVE DOCUMENT

Table 3-1
Plantwide GHG Emission Summary
La Paloma Energy Center

Name	EPN	Normal Operation GHG Mass Emissions ton/yr	Startup/Shutdown GHG Mass Emissions ton/yr	Total GHG Mass Emissions ton/yr	Normal Operation CO_2e ton/yr	Startup/Shutdown CO_2e ton/yr	Total CO_2e ton/yr
Unit 1 (GE F7FA)	U1-STK	1,225,280	36,566	1,261,846	1,226,434	36,600	1,263,035
Unit 2 (GE F7FA)	U2-STK	1,225,280	36,566	1,261,846	1,226,434	36,600	1,263,035
Unit 1 (Siemens SGT6-5000F(4))	U1-STK	1,367,620	48,316	1,415,936	1,368,908	48,362	1,417,270
Unit 2 (Siemens SGT6-5000F(4))	U2-STK	1,367,620	48,316	1,415,936	1,368,908	48,362	1,417,270
Unit 1 (Siemens SGT6-5000F(5))	U1-STK	1,547,119	47,075	1,594,194	1,548,577	47,119	1,595,696
Unit 2 (Siemens SGT6-5000F(5))	U2-STK	1,547,119	47,075	1,594,194	1,548,577	47,119	1,595,696
Auxiliary Boiler	AUXBLR	7,680		7,680	7,687		7,687
Natural Gas Fugitives	NG-FUG	21		21	423		423
Gas Venting	TRB-MSS	0.11		0	2		2
Emergency Generator	EMGEN1-STK	64		64	65		65
Fire Water Pump	FWP1-STK	28		28	28		28
SF_6 Insulated Equipment	SF6-FUG	0.001		0	24		24
Sitewide Emissions[1]		3,102,032		3,196,182	3,105,383		3,199,621

1. The sitewide emissions total uses the higher GHG emissions from the three gas turbine options.

US EPA ARCHIVE DOCUMENT

Table 3-2

GHG Annual Emission Calculations - GE F7FA Combined Cycle Combustion Turbines

La Paloma Energy Center

GHG Emissions Contribution From Natural Gas Fired Combustion Turbines

EPN	Average Heat Input[1] (MMBtu/hr)	Annual Heat Input[2] (MMBtu/yr)	Pollutant	Emission Factor (kg/MMBtu)[3]	GHG Mass Emissions[4] (tpy)	Global Warming Potential[5]	CO_2e (tpy)
U1-STK (GE F7FA)	2,496	20,617,271	CO_2		1,225,255.0	1	1,225,255.0
			CH_4	1.0E-03	22.68	21	476.3
			N_2O	1.0E-04	2.2679	310	703.0
				Totals	**1,225,279.9**		**1,226,434.3**
U2-STK (GE F7FA)	2,496	20,617,271	CO_2		1,225,255.0	1	1,225,255.0
			CH_4	1.0E-03	22.68	21	476.3
			N_2O	1.0E-04	2.2679	310	703.0
				Totals	***1,225,279.9***		**1,226,434.3**
Total for 2 Turbines					***2,450,559.9***		***2,452,868.6***

Note

1. *The average heat input for the GE F7FA scenario is based on the HHV heat input at 100% load, with maximum duct firing, at 69 ^{o}F ambient temperature.*
2. *Annual heat input based on 8,260 hours per year operation (500 subtracted for Startup/shutdown).*
3. *CH_4 and N_2O GHG factors based on Table C-2 of 40 CFR 98 Mandatory Greenhouse Gas Reporting.*

4. *CO_2 emissions based on 40 CFR Part 75, Appendix G, Equation G-4*

$W_{CO2} = (Fc \times H \times U_f \times MW_{CO2})/2000$

W_{CO2} = CO_2 emitted from combustion, tons/yr

Fc = Carbon based F-factor,1040 scf/MMBtu

H = Heat Input (MMBtu/yr)

U_f = 1/385 scf CO_2/lbmole at 14.7 psia and 68 ^{o}F

MW_{CO2} = Molecule weight of CO_2, 44.0 lb/lbmole

5. *Global Warming Potential factors based on Table A-1 of 40 CFR 98 Mandatory Greenhouse Gas Reporting.*

US EPA ARCHIVE DOCUMENT

Table 3-3
Startup GHG Emission Calculations - GE F7FA Turbines
La Paloma Energy Center

Startup/Shutdown GHG Emissions From GE F7FA Turbine

EPN	Heat Input During Startup[1] (MMBtu/hr)	Max Annual Heat Input[5] (MMBtu/yr)	Pollutant	Emission Factor (kg/MMBtu)[2]	GHG Mass Emissions[3] (ton/hr)	GHG Mass Emissions (ton/yr)	Global Warming Potential[4]	CO_2e (ton/hr)	CO_2e (ton/yr)
U1-STK	1,230.6	615,275.7	CO_2		73	36,565	1	73	36,565
			CH_4	1.0E-03	0.0014	0.6782	21	0.0285	14.2427
			N_2O	1.0E-04	0.0001	0.0678	310	0.0420	21.0250
				Totals	**73**	**36,566**		**73**	**36,600**

Note

1. *The following hourly firing rates Information is from Table A-3, in Appendix A of the PSD application submitted to TCEQ on 03/15/2012.*

	Operating Mode	CTG Data Case Number	Turbine Heat Input MMBtu/hr	Duct Burner Heat Input MMBtu/hr	Total Hourly Heat Input MMBtu/hr
Maximum Hourly Heat Input During Startup	50% Load, 20 °F Ambient, no Duct Burner Firing	8b	1,230.6	0	1,230.6

2. CH_4 and N_2O GHG factors based on Table C-2 of 40 CFR 98 Mandatory Greenhouse Gas Reporting.
3. *CO_2 emissions based on 40 CFR Part 75, Appendix G, Equation G-4*

$W_{CO2} = (Fc \times H \times U_f \times MW_{CO2})/2000$

$W_{CO2} = CO_2$ emitted from combustion, tons/hr

Fc = Carbon based F-factor,1040 scf/MMBtu

H = Heat Input (MMBtu/hr)

U_f = 1/385 scf CO_2/lbmole at 14.7 psia and 68 ^oF

MW_{CO2} = Molecule weight of CO_2, 44.0 lb/lbmole

4. *Global Warming Potential factors from Table A-1 of 40 CFR 98 Mandatory Greenhouse Gas Reporting.*
5. *Based on 500 hours per year of startups.*

US EPA ARCHIVE DOCUMENT

Table 3-4

GHG Annual Emission Calculations - Siemens SGT6-5000F(4) Combined Cycle Combustion Turbines

La Paloma Energy Center

EPN	Average Heat Input[1] (MMBtu/hr)	Annual Heat Input[2] (MMBtu/yr)	Pollutant	Emission Factor (kg/MMBtu)[3]	GHG Mass Emissions[4] (tpy)	Global Warming Potential[5]	CO_2e (tpy)
U1-STK (Siemens SGT6-5000F(4))	2,786	23,012,360	CO_2		1,367,591.7	1	1,367,591.7
			CH_4	1.0E-03	25.31	21	531.6
			N_2O	1.0E-04	2.5314	310	784.7
				Totals	**1,367,619.5**		**1,368,908.0**
U2-STK (Siemens SGT6-5000F(4))	2,786	23,012,360	CO_2		1,367,591.7	1	1,367,591.7
			CH_4	1.0E-03	25.31	21	531.6
			N_2O	1.0E-04	2.5314	310	784.7
				Totals	***1,367,619.5***		**1,368,908.0**
Total for 2 Turbines					***2,735,239.0***		***2,737,816.0***

Note

1. *The average heat input for the Siemens scenarios are based on the HHV heat input at 100% load, with maximum duct firing, at 59 ^{o}F ambient temperature.*
2. *Annual heat input based on 8,260 hours per year operation (500 subtracted for Startup/shutdown).*
3. *CH_4 and N_2O GHG factors based on Table C-2 of 40 CFR 98 Mandatory Greenhouse Gas Reporting.*

4. *CO_2 emissions based on 40 CFR Part 75, Appendix G, Equation G-4*

$W_{CO2} = (Fc \times H \times U_f \times MW_{CO2})/2000$

W_{CO2} = CO_2 emitted from combustion, tons/yr

Fc = Carbon based F-factor,1040 scf/MMBtu

H = Heat Input (MMBtu/yr)

U_f = 1/385 scf CO_2/lbmole at 14.7 psia and 68 ^{o}F

MW_{CO2} = Molecule weight of CO_2, 44.0 lb/lbmole

5. *Global Warming Potential factors based on Table A-1 of 40 CFR 98 Mandatory Greenhouse Gas Reporting.*

US EPA ARCHIVE DOCUMENT

Table 3-5
Startup GHG Emission Calculations - Siemens SGT6-5000F(4) Turbines
La Paloma Energy Center

Startup/Shutdown GHG Emissions From Siemens SGT6-5000F(4)

EPN	Heat Input During Startup[1] (MMBtu/hr)	Max Annual Heat Input[5] (MMBtu/yr)	Pollutant	Emission Factor (kg/MMBtu)[2]	GHG Mass Emissions[3] (ton/hr)	GHG Mass Emissions (ton/yr)	Global Warming Potential[4]	CO_2e (ton/hr)	CO_2e (ton/yr)
U1-STK	1,626.0	813,000.0	CO_2		97	48,315	1	97	48,315
			CH_4	1.0E-03	0.0018	0.8962	21	0.0376	18.8197
			N_2O	1.0E-04	0.0002	0.0896	310	0.0556	27.7815
				Totals	**97**	**48,316**		**97**	**48,362**

Note

1. *The following hourly firing rates Information is from Table A-3, in Appendix A of the PSD application submitted to TCEQ on 03/15/2012.*

	Operating Mode	CTG Data Case Number	Turbine Heat Input MMBtu/hr	Duct Burner Heat Input MMBtu/hr		Total Hourly Heat Input MMBtu/hr
Maximum Hourly Heat Input During Startup	60% Load, 10 °F Ambient, no Duct Burner Firing	8	1,626.0	0		1,626.0

2. CH_4 and N_2O GHG factors based on Table C-2 of 40 CFR 98 Mandatory Greenhouse Gas Reporting.
3. *CO_2 emissions based on 40 CFR Part 75, Appendix G, Equation G-4*

$W_{CO2} = (Fc \times H \times U_f \times MW_{CO2})/2000$

$W_{CO2} = CO_2$ emitted from combustion, tons/hr

Fc = Carbon based F-factor,1040 scf/MMBtu

H = Heat Input (MMBtu/hr)

U_f = 1/385 scf CO_2/lbmole at 14.7 psia and 68 ^oF

MW_{CO2} = Molecule weight of CO_2, 44.0 lb/lbmole

4. *Global Warming Potential factors from Table A-1 of 40 CFR 98 Mandatory Greenhouse Gas Reporting.*
5. *Based on 500 hours per year of startups*

US EPA ARCHIVE DOCUMENT

Table 3-6

GHG Emission Calculations - Siemens SGT6-5000F(5) Combined Cycle Combustion Turbines

La Paloma Energy Center

EPN	Average Heat Input[1] (MMBtu/hr)	Annual Heat Input[2] (MMBtu/yr)	Pollutant	Emission Factor (kg/MMBtu)[3]	GHG Mass Emissions[4] (tpy)	Global Warming Potential[5]	CO_2e (tpy)
U1-STK (Siemens SGT6-5000F(5))	3,152	26,032,730	CO_2		1,547,088.0	1	1,547,088.0
			CH_4	1.0E-03	28.64	21	601.4
			N_2O	1.0E-04	2.8636	310	887.7
				Totals	**1,547,119.5**		**1,548,577.0**
U2-STK (Siemens SGT6-5000F(5))	3,152	26,032,730	CO_2		1,547,088.0	1	1,547,088.0
			CH_4	1.0E-03	28.64	21	601.4
			N_2O	1.0E-04	2.8636	310	887.7
				Totals	***1,547,119.5***		**1,548,577.0**
Total for 2 Turbines					***3,094,239.0***		***3,097,154.1***

Note

1. *The average heat input for the Siemens scenarios are based on the HHV heat input at 100% load, with maximum duct firing, at 59 ^{o}F ambient temperature.*
2. *Annual heat input based on 8,260 hours per year operation (500 subtracted for Startup/shutdown).*
3. *CH_4 and N_2O GHG factors based on Table C-2 of 40 CFR 98 Mandatory Greenhouse Gas Reporting.*

4. *CO_2 emissions based on 40 CFR Part 75, Appendix G, Equation G-4*

$W_{CO2} = (Fc \times H \times U_f \times MW_{CO2})/2000$

W_{CO2} = CO_2 emitted from combustion, tons/yr

Fc = Carbon based F-factor,1040 scf/MMBtu

H = Heat Input (MMBtu/yr)

U_f = 1/385 scf CO_2/lbmole at 14.7 psia and 68 ^{o}F

MW_{CO2} = Molecule weight of CO_2, 44.0 lb/lbmole

5. *Global Warming Potential factors based on Table A-1 of 40 CFR 98 Mandatory Greenhouse Gas Reporting.*

US EPA ARCHIVE DOCUMENT

Table 3-7
Startup GHG Emission Calculations - Siemens SGT6-5000F(5) Turbines
La Paloma Energy Center

Startup/Shutdown GHG Emissions From Siemens SGT6-5000F(5)

EPN	Heat Input During Startup[1] (MMBtu/hr)	Max Annual Heat Input[5] (MMBtu/yr)	Pollutant	Emission Factor (kg/MMBtu)[2]	GHG Mass Emissions[3] (ton/hr)	GHG Mass Emissions (ton/yr)	Global Warming Potential[4]	CO_2e (ton/hr)	CO_2e (ton/yr)
U1-STK	1,584.2	792,109.4	CO_2		94	47,074	1	94	47,074
			CH_4	1.0E-03	0.0017	0.8732	21	0.0367	18.3362
			N_2O	1.0E-04	0.0002	0.0873	310	0.0541	27.0677
				Totals	**94**	**47,075**		**94**	**47,119**

Note

1. *The following hourly firing rates Information is from Table A-3, in Appendix A of the PSD application submitted to TCEQ on 03/15/2012.*

	Operating Mode	CTG Data Case Number	Turbine Heat Input MMBtu/hr	Duct Burner Heat Input MMBtu/hr	Total Hourly Heat Input MMBtu/hr
Maximum Hourly Heat Input During Startup	60% Load, 10 °F Ambient, no Duct Burner Firing	11	1,584.2	0	1,584.2

2. CH_4 and N_2O GHG factors based on Table C-2 of 40 CFR 98 Mandatory Greenhouse Gas Reporting.
3. *CO_2 emissions based on 40 CFR Part 75, Appendix G, Equation G-4*

$W_{CO2} = (Fc \times H \times U_f \times MW_{CO2})/2000$

$W_{CO2} = CO_2$ emitted from combustion, tons/hr

Fc = Carbon based F-factor,1040 scf/MMBtu

H = Heat Input (MMBtu/hr)

U_f = 1/385 scf CO_2/lbmole at 14.7 psia and 68 ^oF

MW_{CO2} = Molecule weight of CO_2, 44.0 lb/lbmole

4. *Global Warming Potential factors from Table A-1 of 40 CFR 98 Mandatory Greenhouse Gas Reporting.*
5. *Based on 500 hours per year of startups.*

Table 3-8
GHG Emission Calculations - Auxilliary Boiler
La Paloma Energy Center

GHG Potential To Emit Emissions From Natural Gas Fired Auxilliary Boiler

EPN	Maximum Heat Input[1] (MMBtu/yr)	Pollutant	Emission Factor (kg/MMBtu)[2]	GHG Mass Emissions (tpy)	Global Warming Potential[3]	CO_2e (tpy)
AUXBLR	131,400	CO_2	53.02	7,679.53	1	7,679.5
		CH_4	1.0E-03	0.14	21	3.0
		N_2O	1.0E-04	0.01	310	4.5
			Totals	**7,679.7**		**7,687.1**

Note

1. *Annual fuel use and heating value of natural gas from Table A-10 State/PSD air permit application*
2. *Factors based on Table C-1 and C-2 of 40 CFR Part 98, Mandatory Greenhouse Gas Reporting.*
3. *Global Warming Potential factors based on Table A-1 of 40 CFR 98 Mandatory Greenhouse Gas Reporting.*

US EPA ARCHIVE DOCUMENT

Table 3-9
GHG Emission Calculations - Natural Gas Piping
La Paloma Energy Center

GHG Emissions Contribution From Fugitive Natural Gas Piping Components

EPN	Source Type	Fluid State	Count	Emission Factor[1] scf/hr/comp	CO_2[2] (tpy)	Methane[3] (tpy)	Total (tpy)
NG-FUG	Valves	Gas/Vapor	600	0.121	0.51	12.73	
	Flanges	Gas/Vapor	2400	0.017	0.29	7.15	
	Relief Valves	Gas/Vapor	5	0.193	0.007	0.17	
	Sampling Connections	Gas/Vapor	10	0.031	0.0022	0.054	
	Compressors	Gas/Vapor	3	0.003	0.000063	0.0016	
GHG Mass-Based Emissions					0.81	20.11	***20.9***
Global Warming Potential[4]					1	21	
CO_2e Emissions					0.81	422.3	***423.1***

Note

1. *Emission factors from Table W-1A of 40 CFR 98 Mandatory Greenhouse Gas Reporting published in the May 21, 2012 Technical Corrections*
2. *CO_2 emissions based on vol% of CO_2 in natural gas* *1.41%*
3. *CH_4 emissions based on vol% of CH_4 in natural gas* *96.10%*
4. *Global Warming Potential factors based on Table A-1 of 40 CFR 98 Mandatory Greenhouse Gas Reporting.*

Example calculation:

600 valves	0.123 scf gas	0.0141 scf CO2	lbmole	44 lb CO_2	8760 hr	ton =	0.51 ton/yr
	hr * valve	scf gas	385 scf	lbmole	yr	2000 lb	

US EPA ARCHIVE DOCUMENT

TABLE 3-10

Gaseous Fuel Venting During Turbine Shutdown/Maintenance and Small Equipment and Fugitive Component Repair/Replacement

La Paloma Energy Center

	Initial Conditions			Final Conditions			CO_2[3]	CH_4[4]	Total
Location	**Volume[1] (ft^3)**	**Press. (psig)**	**Temp. (°F)**	**Press. (psig)**	**Temp. (°F)**	**Volume[2] (scf)**	**Annual (tpy)**	**Annual (tpy)**	**Annual (tpy)**
Turbine Fuel Line Shutdown/Maintenance	1,146	**50**	**50**	0	68	5,277	0.0042	0.11	
Small Equipment/Fugitive Component Repair/Replacement	6.7	**50**	**50**	0	68	31	0.00002	0.00061	
GHG Mass-Based Emissions							0.0043	0.1060	0.11
Global Warming Potential[5]							1	21	
CO_2e Emissions							0.0043	2.2	2.2

1. Initial volume is calculated by multpilying the crossectional area by the length of pipe using the following formula: V= pi * [(diameter in inches/12)/2]^2 * length in feet = ft^3

2. Final volume calculated using ideal gas law $[(PV/ZT)_f = (PV/ZT)_i]$. $V_f = V_i (P_i/P_f) (T_f/T_i) (Z_f/Z_i)$, where Z is estimated using the following equation: $Z = 0.9994 - 0.0002P + 3E\text{-}08P^2$.

3. *CO_2* emissions based on vol% of CO_2 in natural gas — 1.41% from natural gas analysis

4. *CH_4 emissions based on vol% of CH_4 in natural gas* — 96.1% from natural gas analysis

5. *Global Warming Potential factors based on Table A-1 of 40 CFR 98 Mandatory Greenhouse Gas Reporting.*

Example calculation:

5277 scf Nat Gas	0.014 scf CO2	lbmole	44 lb CO_2	ton =	=	0.0042	ton/yr CO_2
yr	scf Nat Gas	385 scf	lbmole	2000 lb			

US EPA ARCHIVE DOCUMENT

Table 3-11
GHG Emission Calculations - Emergency Engines
La Paloma Energy Center

GHG Emissions Contribution From Diesel Combustion In Emergency Engines

Assumptions	**Generator**	**Fire Water Pump**	
Ann.Operating Schedule	100	100	hours/year
Power Rating	1,072	500	hp
Max Fuel Combustion	57.3	24.7	gal/hr
Heating Value of No. 2 Fuel Oil[1]	0.138	0.138	MMBtu/gal
Max Hourly Heat Input	7.9	3.4	MMBtu/hr
Annual Heat Input	790.7	340.9	MMBtu/yr

EPN	**Heat Input** (MMBtu/yr)	**Pollutant**	**Emission Factor** (kg/MMBtu)[2]	**GHG Mass Emissions** (tpy)	**Global Warming Potential**[3]	**CO_2e** (tpy)
EMGEN1-STK	790.7	CO_2	73.96	64.3	1	64.3
		CH_4	3.0E-03	0.0026	21	0.1
		N_2O	6.0E-04	0.0005	310	0.2
				64.33		**64.5**
FWP1-STK	340.9	CO_2	73.96	27.7	1	27.7
		CH_4	3.0E-03	0.0011	21	0.0
		N_2O	6.0E-04	0.0002	310	0.1
			Totals	***27.73***		**27.8**

Calculation Procedure

Annual Emission Rate = annual heat Input X Emission Factor X 2.2 lbs/kg X Global Warming Potential / 2,000 lbs/ton

Note

1. *Default high heat value based on Table C-1 of 40 CFR 98 Mandatory Greenhouse Gas Reporting.*
2. *GHG factors based on Tables C-1 and C-2 of 40 CFR 98 Mandatory Greenhouse Gas Reporting.*
3. *Global Warming Potential factors based on Table A-1 of 40 CFR 98 Mandatory Greenhouse Gas Reporting.*

US EPA ARCHIVE DOCUMENT

Table 3-12
GHG Emission Calculations - Electrical Equipment Insulated With SF_6
La Paloma Energy Center

Assumptions

Insulated circuit breaker SF_6 capacity	400	lb
Estimated annual SF_6 leak rate	0.5%	by weight
Estimated annual SF_6 mass emission rate	0.001	ton/yr
Global Warming Potential[1]	23,900	
Estimated annual CO_2e emission rate	23.9	ton/yr

Note

1. Global Warming Potential factors based on Table A-1 of 40 CFR 98 Mandatory Greenhouse Gas Reporting.

US EPA ARCHIVE DOCUMENT

4.0 PREVENTION OF SIGNIFICANT DETERIORATION APPLICABILITY

Because the project emissions increase of GHG is greater than 100,000 ton/yr of CO_2e, PSD is triggered for GHG emissions. The emissions netting analysis is documented on the attached TCEQ PSD netting tables: Table 1F and Table 2F. Note that this is a new Greenfield site and, as such, there are no contemporaneous emission changes associated with the project. Also included in Appendix A is the "The GHG PSD APPLICABILITY FLOWCHART – NEW SOURCES" from the *PSD and Title V Permitting Guidance for Greenhouse Gases.*

.

US EPA ARCHIVE DOCUMENT

TABLE 1F
AIR QUALITY APPLICATION SUPPLEMENT

Permit No.:	101542, PSD-TX-1288	Application Submittal Date:	
Company	La Paloma Energy Center LLC		
RN:		Facility Location:	24684 FM 1595
City	Harlingen	County:	Cameron
Permit Unit I.D.:	GTG/HRSG1 and GTG/HRSG2	Permit Name:	Las Paloma Energy Center
Permit Activity:	☑ New Major Source	☐ Modification	
Project or Process Description:	Construction of new combined cycle electric generating plant		

Complete for all pollutants with a project emission increase.	**POLLUTANTS**						
	Ozone		**CO**	**SO_2**	**PM**	**GHG**	**CO_2e**
	NOx	**VOC**					
Nonattainment? (yes or no)						No	No
Existing site PTE (tpy)	**This form for GHG only**					0	0
Proposed project increases (tpy from 2F)[3]						3,102,032	3,105,331
Is the existing site a major source? If not, is the project a major source by itself? (yes or no)	Yes						
If site is major, is project increase significant? (yes or no)						Yes	Yes
If netting required, estimated start of construction:		6/1/13					
5 years prior to start of construction:		6/1/08	Contemporaneous				
estimated start of operation:		10/1/15	Period				
Net contemporaneous change, including proposed project, from Table 3F (tpy)						3,102,032	3,105,331
FNSR applicable? (yes or no)						Yes	Yes

1. Other PSD pollutants
2. Nonattainment major source is defined in Table 1 in 30 TAC 116.12(11) by pollutant and county. PSD thresholds are found in 40 CFR §51.166(b)(1).
3. Sum of proposed emissions minus baseline emissions, increases only. Nonattainment thresholds are found in Table 1 in 30 TAC 116.12(11) and PSD thresholds in 40 CFR §51.166(b)(23).
4. Since there are no contemporaneous decreases which would potentially affect PSD applicability and an impacts analysis is not required for GHG emissions, contemporaneous emission changes are not included on this table.

The presentations made above and on the accompanying tables are true and correct to the best of my knowledge.

Signature Title Date

US EPA ARCHIVE DOCUMENT

US EPA ARCHIVE DOCUMENT

TCEQ

TABLE 2F
PROJECT EMISSION INCREASE

Pollutant[1]:	GHG	**Permit:**	101542
Baseline Period:	N/A **to** N/A		

	Affected or Modified Facilities[2] FIN	EPN	Permit No.	Actual Emissions[3]	A Baseline Emissions[4]	B Proposed Emissions[5]	Projected Actual Emissions	Difference (B - A) [6]	Correction[7]	Project Increase[8]
1	CTG1/HRSG1	U1-STK	101542	0.00	0.00	1,547,119		1,547,119		1,547,119
2	CTG2/HRSG2	U2-STK	101542	0.00	0.00	1,547,119		1,547,119		1,547,119
3	AUXBLR	AUXBLR	101542	0.00	0.00	7,680		7,680		7,680
4	NG-FUG	NG-FUG	101542	0.00	0.00	21		21		21
5	TRB-MSS	TRB-MSS	101542	0.00	0.00	0.11		0		0
6	EMGEN1	EMGEN1-STK	101542	0.00	0.00	64		64		64
7	FWP1	FWP1-STK	101542	0.00	0.00	28		28		28
8	SF6-FUG	SF6-FUG	101542	0.00	0.00	0.0010		0.0010		0.0010
9										
10										
11										
12										
14										
15										
							Page Subotal[9]			3,102,032

US EPA ARCHIVE DOCUMENT

TCEQ

TABLE 2F
PROJECT EMISSION INCREASE

Pollutant[1]:	CO_2e	**Permit:**	101542
Baseline Period:	N/A **to** N/A		

	Affected or Modified Facilities[2] FIN	EPN	Permit No.	Actual Emissions[3]	A Baseline Emissions[4]	B Proposed Emissions[5]	Projected Actual Emissions	Difference (B - A) [6]	Correction[7]	Project Increase[8]
1	CTG1/HRSG1	U1-STK	101542	0.00	0.00	1,548,577		1,548,577		1,548,577
2	CTG2/HRSG2	U2-STK	101542	0.00	0.00	1,548,577		1,548,577		1,548,577
3	AUXBLR	AUXBLR	101542	0.00	0.00	7,687		7,687		7,687
4	NG-FUG	NG-FUG	101542	0.00	0.00	423		423		423
5	TRB-MSS	TRB-MSS	101542	0.00	0.00	2		2		2
6	EMGEN1	EMGEN1-STK	101542	0.00	0.00	65		65		65
7	FWP1	FWP1-STK	101542							
8										
9										
10										
11										
12										
13										
14										
15										
							Page Subotal[9]			3,105,331

All emissions must be listed in tons per year (tpy). The same baseline period must apply for all facilities for a given NSR pollutant.

1. Individual Table 2F's should be used to summarize the project emission increase for each criteria pollutant.
2. Emission Point Number as designated in NSR Permit or Emissions Inventory.
3. All records and calculations for these values must be available upon request.
4. Correct actual emissions for currently applicable rule or permit requirements, and periods of non-compliance. These corrections, as well as any MSS previously demonstrated under 30 TAC 101, should be explained in the Table 2F supplement.
5. If projected actual emission is used it must be noted in the next column and the basis for the projection identified in the Table 2F supplement.
6. Proposed Emissions (column B) Baseline Emissions (column A).
7. Correction made to emission increase for what portion could have been accommodated during the baseline period. The justification and basis for this estimate must be provided in the Table 2F supplement.
8. Obtained by subtracting the correction from the difference. Must be a positive number.
9. Sum all values for this page.

5.0 BEST AVAILABLE CONTROL TECHNOLOGY (BACT)

The PSD rules define BACT as:

> *Best available control technology* means an emissions limitation (including a visible emission standard) based on the maximum degree of reduction for each pollutant subject to regulation under [the] Act which would be emitted from any proposed major stationary source or major modification which the Administrator, on a case-by-case basis, taking into account energy, environmental, and economic impacts and other costs, determines is achievable for such source or modification through application of production processes or available methods, systems, and techniques, including fuel cleaning or treatment or innovative fuel combustion techniques for control of such pollutant. In no event shall application of best available control technology result in emissions of any pollutant which would exceed the emissions allowed by any applicable standard under 40 CFR parts 60 and 61. If the Administrator determines that technological or economic limitations on the application of measurement methodology to a particular emissions unit would make the imposition of an emissions standard infeasible, a design, equipment, work practice, operational standard, or combination thereof, may be prescribed instead to satisfy the requirement for the application of best available control technology. Such standard shall, to the degree possible, set forth the emissions reduction achievable by implementation of such design, equipment, work practice or operation, and shall provide for compliance by means which achieve equivalent results.[15]

In the EPA guidance document titled *PSD and Title V Permitting Guidance for Greenhouse Gases*, EPA recommended the use of the Agency's five-step "top-down" BACT process to determine BACT for GHGs.[16] In brief, the top-down process calls for all available control technologies for a given pollutant to be identified and ranked in descending order of control effectiveness. The permit applicant should first examine the highest-ranked ("top") option. The top-ranked options should be established as BACT unless the permit applicant demonstrates to the satisfaction of the permitting authority that technical considerations, or energy, environmental, or economic impacts justify a conclusion that the top ranked technology is not "achievable" in that case. If the most effective control strategy is eliminated in this fashion, then the next most effective alternative should be evaluated, and so on, until an option is selected as BACT.

EPA has broken down this analytical process into the following five steps:

Step 1: Identify all available control technologies.
Step 2: Eliminate technically infeasible options.
Step 3: Rank remaining control technologies.

[15] 40 C.F.R. § 52.21(b)(12.)

[16] EPA, *PSD and Title V Permitting Guidance for Greenhouse Gases*, p. 18 (Nov. 2010).

US EPA ARCHIVE DOCUMENT

Step 4: Evaluate most effective controls and document results.
Step 5: Select the BACT.

5.1 BACT FOR THE COMBINED CYCLE COMBUSTION TURBINE

5.1.1 Step 1: Identify All Available Control Technologies

5.1.1.1 Inherently Lower-Emitting Processes/Practices/Designs

A summary of available, lower greenhouse gas emitting processes, practices, and designs for combustion turbine power generators is presented below. The proposed energy efficiency processes, practices and designs discussed in Step 1 will be the same for three models of combustion turbines being considered for this site: the General Electric 7FA, the Siemens SGT6-5000F(4), and the Siemens SGT6-5000F(5). The BACT limits proposed in Step 5 are specific to each turbine model.

5.1.1.1.1 Combustion Turbine Energy Efficiency Processes, Practices, and Designs

Combustion Turbine Design

CO_2 is a product of combustion of fuel containing carbon, which is inherent in any power generation technology using fossil fuel. It is not possible to reduce the amount of CO_2 generated from combustion, as CO_2 is the essential product of the chemical reaction between the fuel and the oxygen in which it burns, not a byproduct caused by imperfect combustion. As such, there is no technology available that can effectively reduce CO_2 generation by adjusting the conditions in which combustion takes place.

The only effective means to reduce the amount of CO_2 generated by a fuel-burning power plant is to generate as much electric power as possible from the combustion, thereby reducing the amount of fuel needed to meet the plant's required power output. This result is obtained by using the most efficient generating technologies available, so that as much of the energy content of the fuel as possible goes into generating power.

The most efficient way to generate electricity from a natural gas fuel source is the use of a combined cycle design. For fossil fuel technologies, efficiency ranges from approximately 30-50% (higher heating value [HHV]). A typical coal-fired Rankine cycle power plant has a base load efficiency of approximately 30% (HHV), while a modern F-Class natural gas fired combined cycle unit operating under optimal conditions has a base load efficiency of approximately 50% (HHV).

Combined cycle units operate based on a combination of two thermodynamic cycles: the Brayton and the Rankine cycles. A combustion turbine operates on the Brayton cycle and the HRSG and steam turbine operate on the Rankine cycle. The combination of the two thermodynamic cycles allows for the high efficiency associated with combined cycle plants.

US EPA ARCHIVE DOCUMENT

In addition to the high-efficiency primary components of a combustion turbine, there are a number of other design features employed within the turbine that can improve the overall efficiency of the machine. These additional features include those summarized below.

Periodic Burner Tuning

Modern F-Class combustion turbines have regularly scheduled maintenance programs. These maintenance programs are important for the reliable operation of the unit, as well as to maintain optimal efficiency. As the combustion turbine is operated, the unit experiences degradation and loss in performance. The combustion turbine maintenance program helps restore the recoverable lost performance. The maintenance program schedule is determined by the number of hours of operation and/or turbine starts. There are three basic maintenance levels, commonly referred to as combustion inspections, hot gas path inspections, and major overhauls. Combustion inspections are the most frequent of the maintenance cycles. As part of this maintenance activity, the combustors are tuned to restore highly efficient low-emission operation.

Reduction in Heat Loss

Modern F-Class combustion turbines have high operating temperatures. The high operating temperatures are a result of the heat of compression in the compressor along with the fuel combustion in the burners. To minimize heat loss from the combustion turbine and protect the personnel and equipment around the machine, insulation blankets are applied to the combustion turbine casing. These blankets minimize the heat loss through the combustion turbine shell and help improve the overall efficiency of the machine.

Instrumentation and Controls

Modern F-Class combustion turbines have sophisticated instrumentation and controls to automatically control the operation of the combustion turbine. The control system is a digital-type and is supplied with the combustion turbine. The distributed control system (DCS) controls all aspects of the turbine's operation, including the fuel feed and burner operations, to achieve efficient low-NO_X combustion. The control system monitors the operation of the unit and modulates the fuel flow and turbine operation to achieve optimal high-efficiency low-emission performance for full-load and part-load conditions.

5.1.1.1.2 Heat Recovery Steam Generator Energy Efficiency Processes, Practices, and Designs

The HRSG takes waste heat from the combustion turbine exhaust and uses the waste heat to convert boiler feed water to steam. Duct burning involves burning additional natural gas in the ducts to the heat recovery boiler, which increases the temperature of the exhaust coming from the combustion turbines and thereby creates additional steam for the steam turbine. The duct burner firing provides additional power generation capacity during periods of high electrical demand.

US EPA ARCHIVE DOCUMENT

The modern F-Class combustion turbine-based combined cycle HRSG is generally a horizontal, natural circulation, drum-type heat exchanger designed with three pressure levels of steam generation, reheat, split superheater sections with interstage attemperation, post-combustion emissions control equipment, and condensate recirculation. The HRSG is designed to maximize the conversion of the combustion turbine exhaust gas waste heat to steam for all plant ambient and load conditions. Maximizing steam generation will increase the steam turbine's power generation, which maximizes plant efficiency.

Heat Exchanger Design Considerations

HRSGs are heat exchangers designed to capture as much thermal energy as possible from the combustion turbine exhaust gases. This is performed at multiple pressure levels. For a drum-type configuration, each pressure level incorporates an economizer section(s), evaporator section, and superheater section(s). These heat transfer sections are made up of many thin-walled tubes to provide surface area to maximize the transfer of heat to the working fluid. Most of the tubes also include extended surfaces (e.g., fins). The extended surface optimizes the heat transfer, while minimizing the overall size of the HRSG. Additionally, flow guides are used to distribute the flow evenly through the HRSG to allow for efficient use of the heat transfer surfaces and post-combustion emissions control components. Low-temperature economizer sections employ recirculation systems to minimize cold-end corrosion, and stack dampers are used for cycling operation to conserve the thermal energy within the HRSG when the unit is off line.

Insulation

HRSGs take waste heat from the combustion turbine exhaust gas and uses that waste heat to convert boiler feed water to steam. As such, the temperatures inside the HRSG are nearly equivalent to the exhaust gas temperatures of the turbine. For F-Class combustion turbines, these temperatures can approach 1,200°F. HRSGs are designed to maximize the conversion of the waste heat to steam. One aspect of the HRSG design in maximizing this waste heat conversion is the use of insulation. Insulation minimizes heat loss to the surrounding air, thereby improving the overall efficiency of the HRSG. Insulation is applied to the HRSG panels that make up the shell of the unit, to the high-temperature steam and water lines, and typically to the bottom portion of the stack.

Minimizing Fouling of Heat Exchange Surfaces

HRSGs are made up of a number of tubes within the shell of the unit that are used to generate steam from the combustion turbine exhaust gas waste heat. To maximize this heat transfer, the tubes and their extended surfaces need to be as clean as possible. Fouling of the tube surfaces impedes the transfer of heat. Fouling occurs from the constituents within the exhaust gas stream. To minimize fouling, filtration of the inlet air to the combustion turbine is performed. Additionally, cleaning of the tubes is performed during periodic outages. By reducing the fouling, the efficiency of the unit is maintained.

Minimizing Vented Steam and Repair of Steam Leaks

As with all steam-generated power facilities, minimization of steam vents and repair of steam leaks is important in maintaining the plant's efficiency. A combined cycle facility has just a few

US EPA ARCHIVE DOCUMENT

locations where steam is vented from the system, including at the deaerator vents, blowdown tank vents, and vacuum pumps/steam jet air ejectors. These vents are necessary to improve the overall heat transfer within the HRSG and condenser by removing solids and air that potentially blankets the heat transfer surfaces lowering the equipment's performance. Additionally, power plant operators are concerned with overall efficiency of their facilities. Therefore, steam leaks are repaired as soon as possible to maintain facility performance. Minimization of vented steam and repair of steam leaks will be performed for this project.

5.1.1.1.3 Steam Turbine Energy Efficiency Processes, Practices, and Designs

The steam turbine for this project will be a modern, high-efficiency, reheat, condensing unit. Steam turbines have been in operation for over a century, and are generally classified as impulse or reaction. However, most modern turbines employ both impulse and reaction blading. The overall efficiency of the unit is affected by a number of items, including the inlet steam conditions, the exhaust steam conditions, the blading design, the turbine seals, and the generator efficiency.

Use of Reheat Cycles

The efficiency of a steam turbine is directly related to the steam conditions entering the turbine. The higher the steam temperature and pressure, the higher the overall efficiency. To achieve the higher temperatures, reheat cycles are employed. This is necessary to minimize the moisture content of the exhaust steam. If the moisture content of the exhaust steam is too high, erosion of the last-stage turbine blades occurs. This cycle reheats partially expanded steam from the steam turbine. For a modern combined cycle facility, the high-pressure inlet and intermediate-pressure inlet steam temperatures typically are 1,050°F and above, and the high-pressure steam turbine inlet pressure is typically in the range of 1,800-2,400 psig.

Use of Exhaust Steam Condenser

Steam turbine efficiency is also improved by lowering the exhaust steam conditions of the unit. The lower the exhaust pressure, the higher the overall turbine efficiency. For high-efficiency units, the exhaust steam is saturated under vacuum conditions. This is accomplished by the use of a condenser. The condenser is typically a shell and tube heat exchanger with cooling water flowing through the tubes and the turbine exhaust steam condensing in the shell. The condensing steam creates a vacuum in the condenser, which increases steam turbine efficiency. This vacuum is dependent on the temperature of the cooling water. As the temperature of the cooling water is lowered, the absolute vacuum attainable is lowered and the steam turbine is more efficient.

Efficient Blading Design

Blading design also affects the overall efficiency of the turbine. As noted earlier, steam turbines have been used to generate power for over a century, and are either impulse or reaction design. The blade design has evolved for high-efficiency transfer of the energy in the steam to power generation. Additionally, 3-D computer-aided design technology is also employed to provide the

US EPA ARCHIVE DOCUMENT

highest efficiency blade design. Blade materials are also important components in blade design, which allow for high-temperature and large exhaust areas to improve performance.

Turbine seals are also important in the overall performance of the steam turbine. The high-pressure steam will leak to the atmosphere along the turbine shaft, as well as bypass the turbine stages if sealing is not employed. The steam turbine designers have multiple steam seal designs to obtain the highest efficiency from the steam turbine.

Efficient Steam Turbine Generator Design

The steam turbine generator is also a key element in the overall performance of the steam turbine. The modern generator is a high-efficiency unit. The generator for modern steam turbines is typically cooled by one of three methods. These methods are open-air cooling, totally enclosed water to air cooling, or hydrogen cooling. These cooling methods allow for the highest efficiency of the generator, resulting in an overall high-efficiency steam turbine. According to Siemens representatives, there is no energy penalty between the three cooling methods. The cooling method for the LPEC steam turbine will be either totally enclosed water to air cooling or hydrogen cooling. The selection of the cooling method will be made by the equipment provider based on atmospheric conditions for the particular site.

5.1.1.1.4 Plant-wide Energy Efficiency Processes, Practices, and Designs

There are a number of other components within the combined cycle plant that help improve overall efficiency, including:

- **Fuel gas preheating** – The overall efficiency of the combustion turbine is increased with increased fuel inlet temperatures. For the F-Class combustion turbine based combined cycle, the fuel gas is generally heated with high temperature water from the HRSG. This improves the efficiency of the combustion turbine.
- **Drain operation** – Drains are required to allow for draining the equipment for maintenance (i.e., maintenance drains), and also to allow condensate to be removed from the steam piping and drains for operation (i.e., operation drains). Operation drains are generally controlled to minimize the loss of energy from the cycle. This is accomplished by closing the drains as soon as the appropriate steam conditions are achieved.
- **Multiple combustion turbine/HRSG trains** – Multiple combustion turbine/HRSG trains help with part-load operation. The multiple trains allow the unit to achieve higher overall plant part-load efficiency by shutting down a train operating at less efficient part-load conditions and ramping up the remaining train to high-efficiency full-load operation.
- **Boiler feed pump fluid drives** – The boiler feed pumps are used as the means to impart high pressure on the working fluid. The pumps require considerable power. To minimize the power consumption at part-loads, the use of fluid drives or variable-frequency drives can be employed. For this project, fluid drives are

US EPA ARCHIVE DOCUMENT

being used to minimize power consumption at part-load, improving the facility's overall efficiency.

5.1.1.2 Add-On Controls

In addition to power generation process technology options discussed above, it is appropriate to consider add-on technologies as possible ways to capture GHG emissions that are emitted from natural gas combustion in the proposed project's CTG/HRSG units and to prevent them from entering the atmosphere. These emerging carbon capture and storage (CCS) technologies generally consist of processes that separate CO_2 from combustion process flue gas, and then inject it into geologic formations such as oil and gas reservoirs, unmineable coal seams, and underground saline formations. Of the emerging CO_2 capture technologies that have been identified, only amine absorption is currently commercially used for state-of-the-art CO_2 separation processes. Amine absorption has been applied to processes in the petroleum refining and natural gas processing industries and for exhausts from gas-fired industrial boilers. Other potential absorption and membrane technologies are currently considered developmental.

The U.S. Department of Energy's National Energy Technology Laboratory (DOE-NETL) provides the following brief description of state-of-the-art post-combustion CO_2 capture technology and related implementation challenges:

> "…In the future, emerging R&D will provide numerous cost-effective technologies for capturing CO_2 from power plants. At present, however, state-of-the-art technologies for existing power plants are essentially limited to amine absorbents. Such amines are used extensively in the petroleum refining and natural gas processing industries… Amine solvents are effective at absorbing CO_2 from power plant exhaust streams—about 90 percent removal—but the highly energy-intensive process of regenerating the solvents decreases plant electricity output…"[17]

The DOE-NETL adds:

> "…Separating CO_2 from flue gas streams is challenging for several reasons:
>
> - CO_2 is present at dilute concentrations (13-15 volume percent in coal-fired systems and 3-4 volume percent in gas-fired turbines) and at low pressure (15-25 pounds per square inch absolute [psia]), which dictates that a high volume of gas be treated.

[17] DOE-NETL, *Carbon Sequestration: FAQ Information Portal*, http://extsearch1.netl.doe.gov/search?q=cache:e0yvzjAh22cJ:www.netl.doe.gov/technologies/carbon_seq/FAQs/tech-status.html+emerging+R%26D&access=p&output=xml_no_dtd&ie=UTF-8&client=default_frontend&site=default_collection&proxystylesheet=default_frontend&oe=ISO-8859-1 (last visited Feb. 27, 2012).

US EPA ARCHIVE DOCUMENT

- Trace impurities (particulate matter, sulfur dioxide, nitrogen oxides) in the flue gas can degrade sorbents and reduce the effectiveness of certain CO_2 capture processes.
- Compressing captured or separated CO_2 from atmospheric pressure to pipeline pressure (about 2,000 psia) represents a large auxiliary power load on the overall power plant system…"[18]

For the combustion turbines being considered for this project, the CO_2 stack concentration at base load and ISO conditions for the General Electric 7FA is 3.9 vol% without duct burner firing and 5.4 vol% with duct burner firing; the Siemens SGT6-5000F(4) is 3.9 vol% without duct burner firing and 5.2 vol% with duct burner firing; and the Siemens SGT6-5000F(5) is 3.8 vol% without duct burner firing and 4.9 vol% with duct burner firing.

If CO_2 capture can be achieved at a power plant, it would need to be routed to a geologic formation capable of long-term storage. The long-term storage potential for a formation is a function of the volumetric capacity of a geologic formation and CO_2 trapping mechanisms within the formation, including dissolution in brine, reactions with minerals to form solid carbonates, and/or adsorption in porous rock. The DOE-NETL describes the geologic formations that could potentially serve as CO_2 storage sites as follows:

> "Geologic carbon dioxide (CO_2) storage involves the injection of supercritical CO_2 into deep geologic formations (injection zones) overlain by competent sealing formations and geologic traps that will prevent the CO_2 from escaping. Current research and field studies are focused on developing better understanding of 11 major types of geologic storage reservoir classes, each having their own unique opportunities and challenges. Understanding these different storage classes provides insight into how the systems influence fluids flow within these systems today, and how CO_2 in geologic storage would be anticipated to flow in the future. The different storage formation classes include: deltaic, coal/shale, fluvial, alluvial, strandplain, turbidite, eolian, lacustrine, clastic shelf, carbonate shallow shelf, and reef. Basaltic interflow zones are also being considered as potential reservoirs. These storage reservoirs contain fluids that may include natural gas, oil, or saline water; any of which may impact CO_2 storage differently…"[19]

5.1.2 Step 2: Eliminate Technically Infeasible Options

Amine absorption technology for CO_2 capture has been applied to processes in the petroleum refining and natural gas processing industries, so it is technically feasible to apply that technology to exhausts for power plants. However, that technology has not been commercially available to power plants gas turbine exhausts, which have considerably larger flow volumes and considerably lower CO_2 concentrations. The high energy demand, high water demand,

[18] *Id.*

[19] DOE-NETL, *Carbon Sequestration: Geologic Storage Focus Area,* http://www.netl.doe.gov/technologies/carbon_seq/corerd/storage.html (last visited Feb. 27, 2012)

US EPA ARCHIVE DOCUMENT

technical difficulties and economic costs associated with CCS are addressed in Step 4 of this section.

5.1.3 Step 3: Rank Remaining Control Technologies

As all of the energy efficiency related processes, practices, and designs discussed in Section 5.1.1.1 of this application are being proposed for this project, a ranking of the control technologies is not necessary for this application. As documented in Step 4 below, implementation of CCS technology is not economically reasonable, leaving energy efficiency measures as the only feasible emission control options.

5.1.4 Step 4: Evaluate Most Effective Controls and Document Results

As all of the energy efficiency related processes, practices, and designs discussed in Section 5.1.1.1 of this application are being proposed for this project, an examination of the energy, environmental, and economic impacts of the efficiency designs is not necessary for this application.

In this section, LPEC addresses the potential energy, environmental, and economic feasibility of implementing CCS technology as BACT for GHG emissions from the proposed project's gas turbine/HRSG trains. Each component of CCS technology (i.e., capture and compression, transport, and storage) is discussed separately.

5.1.4.1 CO_2 Capture and Compression

Though amine absorption technology for CO_2 capture has been applied to processes in the petroleum refining and natural gas processing industries and to exhausts from gas-fired industrial boilers, it is more difficult to apply to power plant gas turbine exhausts, which have considerably larger flow volumes and considerably lower CO_2 concentrations. The Obama Administration's Interagency Task Force on Carbon Capture and Storage confirms this in its recently completed report on the current status of development of CCS systems:

> "Current technologies could be used to capture CO_2 from new and existing fossil energy power plants; however, they are not ready for widespread implementation primarily because they have not been demonstrated at the scale necessary to establish confidence for power plant application. Since the CO_2 capture capacities used in current industrial processes are generally much smaller than the capacity required for the purposes of GHG emissions mitigation at a typical power plant, there is considerable uncertainty associated with capacities at volumes necessary for commercial deployment."[20]

[20] *Report of the Interagency Task Force on Carbon Capture and Storage* at 50 (Aug. 2010).

US EPA ARCHIVE DOCUMENT

In its current CCS research program plans, the DOE-NETL confirms that commercial CO_2 capture technology for large-scale power plants is not yet available and suggests that it may not be available until at least 2020:

> "The overall objective of the Carbon Sequestration Program is to develop and advance CCS technologies that will be ready for widespread commercial deployment by 2020. To accomplish widespread deployment, four program goals have been established:
>
> (1) Develop technologies that can separate, capture, transport, and store CO_2 using either direct or indirect systems that result in a less than 10 percent increase in the cost of energy by 2015;
>
> (2) Develop technologies that will support industries' ability to predict CO_2 storage capacity in geologic formations to within ±30 percent by 2015;
>
> (3) Develop technologies to demonstrate that 99 percent of injected CO_2 remains in the injection zones by 2015;
>
> (4) Complete Best Practices Manuals (BPMs) for site selection, characterization, site operations, and closure practices by 2020. Only by accomplishing these goals will CCS technologies be ready for safe, effective commercial deployment both domestically and abroad beginning in 2020 and through the next several decades."[21A]

To corroborate that commercial availability of CO_2 capture technology for large-scale power plant projects will not occur for several more years, Alstom, one of the major developers of commercial CO_2 capture technology using post-combustion amine absorption, post-combustion chilled ammonia absorption, and oxy-combustion, states on its web site that its CO_2 capture technology will become commercially available in 2015.[22B] However, it should be noted that in committing to this timeframe, the company does not indicate whether such technology will be able to handle the volume of CO_2 emissions generated by a project of the size of LPEC.

Another challenge of CO_2 capture is conservation of water resources. A modern natural gas fired combined cycle facility requires four to five million gallons of water per day for condenser cooling and boiler make-up service. This amount will vary based on ambient temperature and humidity's well as the level of duct firing in the HRSG. Adding CO_2 separation facilities and compression equipment significantly increases the cooling water requirements of a generating station. Studies have indicated that the water consumption of a natural fired combined cycle facility with CCS may have an increased water consumption of more than 90%.

The La Paloma Energy Center will utilize the effluent discharge from the local waste water treatment facility to provide both the cooling water and the boiler make-up water requirements. The local waste water treatment facility currently processes and discharges a daily average of seven million gallons of effluent. This volume of effluent cannot support the daily water requirements of an F-class natural gas fired combined cycle facility if equipped with CCS.

---

[21] DOE-NETL, *Carbon Sequestration Program: Technical Program Plan,* at 10 (Feb. 2011).

[22] Alstom, *Alstom's Carbon Capture Technology Commercially "Ready to Go" by 2015*, Nov.30, 2010, http://www.alstom.com/australia/news-and-events/pr/ccs2015/ (last visited Sept.28, 2011).

US EPA ARCHIVE DOCUMENT

5.1.4.2 CO_2 Transport

Even if it is assumed that CO_2 capture and compression could feasibly be achieved for the proposed project, the high-volume CO_2 stream generated would need to be transported to a facility capable of storing it. Potential geologic storage sites in Texas, Louisiana, and Mississippi to which CO_2 could be transported if a pipeline was constructed are delineated on the map found at the end of Section 5.[23] The potential length of such a CO_2 transport pipeline is uncertain due to the uncertainty of identifying a site(s) that is suitable for large-scale, long-term CO_2 storage. The hypothetical minimum length required for any such pipeline(s) is the distance to the closest site with recognized potential for some geological storage of CO_2, which is an enhanced oil recovery (EOR) reservoir site located within 15 miles of the proposed project.

However, none of the South and Southeast Texas EOR reservoir or other geologic formation sites have yet been technically demonstrated for large-scale, long-term CO_2 storage.

In comparison, the closest site that is currently being field-tested to demonstrate its capacity for large-scale geological storage of CO_2 is the Southwest Regional Partnership on Carbon Sequestration's (SWP) SACROC test site, which is located in Scurry County, Texas approximately 490 miles away (see the map at the end of Section 5 for the test site location). Therefore, to access this potentially large-scale storage capacity site, assuming that it is eventually demonstrated to indefinitely store a substantial portion of the large volume of CO_2 generated by the proposed project, a very long and sizable pipeline would need to be constructed to transport the large volume of high-pressure CO_2 from the plant to the storage facility, thereby rendering implementation of a CO_2 transport system infeasible.

5.1.4.3 CO_2 Storage

Even if it is assumed that CO_2 capture and compression could feasibly be achieved for the proposed project and that the CO_2 could be transported economically, the feasibility of CCS technology would still depend on the availability of a suitable sequestration site. The suitability of potential storage sites is a function of volumetric capacity of their geologic formations, CO_2 trapping mechanisms within formations (including dissolution in brine, reactions with minerals to form solid carbonates, and/or adsorption in porous rock), and potential environmental impacts resulting from injection of CO_2 into the formations. Potential environmental impacts resulting from CO_2 injection that still require assessment before CCS technology can be considered feasible include:

- Uncertainty concerning the significance of dissolution of CO_2 into brine,

[23] Susan Hovorka, University of Texas at Austin, Bureau of Economic Geology, Gulf Coast Carbon Center, *New Developments: Solved and Unsolved Questions Regarding Geologic Sequestration of CO_2 as a Greenhouse Gas Reduction Method* (GCCC Digital Publication #08-13) at slide 4 (Apr. 2008), available at: http://www.beg.utexas.edu/gccc/forum/codexdownloadpdf.php?ID=100(last visited Feb. 27, 2012).

US EPA ARCHIVE DOCUMENT

- Risks of brine displacement resulting from large-scale CO_2 injection, including a pressure leakage risk for brine into underground drinking water sources and/or surface water,
- Risks to fresh water as a result of leakage of CO_2, including the possibility for damage to the biosphere, underground drinking water sources, and/or surface water,[24] and
- Potential effects on wildlife.

Potentially suitable storage sites, including EOR sites and saline formations, exist in Texas, Louisiana, and Mississippi. In fact, sites with such recognized potential for some geological storage of CO_2 are located within 15 miles of the proposed project, but such nearby sites have not yet been technically demonstrated with respect to all of the suitability factors described above. In comparison, the closest site that is currently being field-tested to demonstrate its capacity for geological storage of the volume of CO_2 that would be generated by the proposed power unit, i.e., SWP's SACROC test site, is located in Scurry County, Texas approximately 490 miles away. It should be noted that, based on the suitability factors described above, currently the suitability of the SACROC site or any other test site to store a substantial portion of the large volume of CO_2 generated by the proposed project has yet to be fully demonstrated.

Based on the reasons provided above, LPEC believes that CCS technology should be eliminated from further consideration as a potential feasible control technology for purposes of this BACT analysis. However, to answer possible questions that the public or the EPA may have concerning the relative costs of implementing hypothetical CCS systems, LPEC has estimated such costs. Construction of a carbon capture system at the LPEC site would require installation of the following major pieces of equipment:

- Two Amine Scrubber Vessels
- Two CO_2 Strippers
- Four Amine Transfer Pumps
- Four Flue Gas Fans
- Four CO_2 Gas Compressor
- One Amine Storage Tank

The estimated costs associated with implementation of a carbon capture system at the LPEC Plant are shown in the table below. A control cost for implementing CCS in terms of $/ton of CO_2 avoided was calculated using the "cost of electricity" methodology outlined in the U.S. Department of Energy document "Cost and Performance Baseline for Fossil Energy Plants Volume 1: Bituminous Coal and Natural Gas to Electricity", Revision2, November 2010, DOE/NETL-2010/1397.

[24] *Id.*

US EPA ARCHIVE DOCUMENT

	Two Combustion Turbines and One Steam Turbine Without CCS	Two Combustion Turbines and One Steam Turbine With CCS
Estimated Plant Construction Cost	$443,800,000	$974,000,000
Net Power Output (MW)	688.4	595.3
Net Plant HHV efficiency	49.9%	42.9%
Annualized Cost of CO_2 Capture		$242,608,288/yr
Annualized Cost of CO_2 Transport		$1,035,466/yr
Annualized Cost of CO_2 Storage		$27,542,874/yr
Cost-of-Electricity (COE) ($/MWh) @ 85% capacity factor	73.3 $/MWh	125.3 $/MWh
CO_2 Emissions (Siemens SGT6-5000F(5))	3,281,542 tons/yr	328,154.2 tons/yr
Cost of CO_2 Avoided		$91.82/ton CO_2

In addition to the high construction and operating costs associated with CCS, the carbon capture equipment requires a substantial amount of energy to operate, thereby reducing the net electrical output of the plant. Operation of carbon capture equipment at a typical natural gas fired combined cycle plant is estimated to reduce the net energy efficiency of the plant from approximately 50% (HHV) to approximately 42.9% (HHV).[25]

5.1.5 Step 5: Select BACT

LPEC proposes as BACT for this project, the following energy efficiency processes, practices, and designs for the proposed combined cycle combustion turbines:

- Use of Combined Cycle Power Generation Technology
- Combustion Turbine Energy Efficiency Processes, Practices, and Designs
    - Efficient turbine design
    - Turbine inlet air cooling
    - Periodic turbine burner tuning
    - Reduction in heat loss
    - Instrumentation and controls
- HRSG Energy Efficiency Processes, Practices, and Designs
    - Efficient heat exchanger design
    - Insulation of HRSG

[25] US Department of Energy, National Energy Technology Laboratory, "Costs and Performance Baseline For Fossil Energy Plants, Volume 1 - Bituminous Coal and Natural Gas to Energy", Revision 2, November 2010

US EPA ARCHIVE DOCUMENT

    - Minimizing Fouling of heat exchange surfaces
    - Minimizing vented steam and repair of steam leaks
- Steam Turbine Energy Efficiency Processes, Practices, and Designs
    - Use of Reheat Cycles
    - Use of Exhaust Steam Condenser
    - Efficient Blading Design
    - Efficient Generator Design
- Plant-wide Energy Efficiency Processes, Practices, and Designs
    - Fuel gas preheating
    - Drain operation
    - Multiple combustion turbine/HRSG trains
    - Boiler feed pump fluid drive design

To determine the appropriate heat-input efficiency limit, LPEC started with the turbine's design base load net heat rate for combined cycle operation and then calculated a compliance margin based upon reasonable degradation factors that may foreseeably reduce efficiency under real-world conditions. The design base load net heat rate for the combustion turbines being considered for this project are as follows: the General Electric 7FA design base load net heat rate is 6674 Btu/kWhr (HHV) without duct burner firing and 7051 Btu/kWhr (HHV) with duct burner firing; the Siemens SGT6-5000F(4) design base load net heat rate is 6782 Btu/kWhr (HHV) without duct burner firing and 7045 Btu/kWhr (HHV) with duct burner firing; and the Siemens SGT6-5000F(5) design base load net heat rate is 6845 Btu/kWhr (HHV) without duct burner firing and 7050 Btu/kWhr (HHV) with duct burner firing. Note that these rates reflect the facility's "net" power production, meaning the denominator is the amount of power provided to the grid; it does not reflect the total amount of energy produced by the plant, which also includes auxiliary load consumed by operation of the plant. The design base load gross heat rate for the combustion turbines being considered for this project are as follows: the General Electric 7FA design base load gross heat rate is 6521.2 Btu/kWhr (HHV) without duct burner firing and 6970.7 Btu/kWhr (HHV) with duct burner firing; the Siemens SGT6-5000F(4) design base load gross heat rate is 6615.5 Btu/kWhr (HHV) without duct burner firing and 6782.0 Btu/kWhr (HHV) with duct burner firing; and the Siemens SGT6-5000F(5) design base load gross heat rate is 6582.2 Btu/kWhr (HHV) without duct burner firing and 6808.7 Btu/kWhr (HHV) with duct burner firing.

To determine an appropriate heat rate limit for the permit, the following compliance margins are added to the base heat rate limit:

- A 3.3% design margin reflecting the possibility that the constructed facility will not be able to achieve the design heat rate.
- A 6% performance margin reflecting efficiency losses due to equipment degradation prior to maintenance overhauls.
- A 3% degradation margin reflecting the variability in operation of auxiliary plant equipment due to use over time.

Design and construction of a combined-cycle power plant involves many assumptions about anticipated performance of the many elements of the plant, which are often imprecise or not

US EPA ARCHIVE DOCUMENT

reflective of conditions once installed at the site. As a consequence, the facility also calculates an "Installed Base Heat Rate", which represents a design margin of 3.3% to address such items as equipment underperformance and short-term degradation.

To establish an enforceable BACT condition that can be achieved over the life of the facility, the permit limit must also account for anticipated degradation of the equipment over time between regular maintenance cycles. The manufacturer's degradation curves project anticipated degradation rate of 5% within the first 48,000 hours of the gas turbine's useful life; they do not reflect any potential increase in this rate which might be expected after the first major overhaul and/or as the equipment approaches the end of its useful life. Further, the projected 5% degradation rate represents the average, and not the maximum or guaranteed, rate of degradation for the gas turbines. Therefore, LPEC proposes that, for purposes of deriving an enforceable BACT limitation on the proposed facility's heat rate, gas turbine degradation may reasonably be estimated at 6% of the facility's heat rate.

Finally, in addition to the heat rate degradation from normal wear and tear on the combustion turbines, LPEC is also providing a reasonable compliance margin based on potential degradation in other elements of the combined cycle plant that would cause the overall plant heat rate to rise (*i.e.*, cause efficiency to fall). Degradation in the performance of the heat recovery steam generator, steam turbine, heat transfer, cooling tower, and ancillary equipment such as pumps and motors is also expected to occur over the course of a major maintenance cycle.

As a result of these adjustments, LPEC is proposing the following output based CO_2/MWh BACT limits for the Project, on a 12 month rolling average, excluding startup hours:

Turbine Model	Gross Heat Rate without Duct Firing (Btu/kWh) (HHV)	Gross Heat Rate With Duct Firing (Btu/kWh) (HHV)	Output Based Emission Limit without Duct Firing (lb CO_2/MWh) gross	Output Based Emission Limit with Duct Firing (lb CO_2/MWh) gross
General Electric 7FA	7354.8	7861.8	874.2	934.5
Siemens SGT6-5000F(4)	7461.2	7649.0	886.8	909.2
Siemens SGT6-5000F(5)	7423.6	7679.0	882.4	912.7

The calculation of the gross heat rates and the equivalent lb CO_2/MWhr (gross) is provided on Tables 5-2, 5-3, and 5-4 of this application. The proposed BACT limits vary by 2.6% from the lowest proposed BACT limit to the highest proposed BACT limit. While energy efficiency will be a consideration for final selection of a turbine, other considerations will include the capacity of the turbine, cost, reliability, and predicted longevity of the turbines.

US EPA ARCHIVE DOCUMENT

While starting up the combustion turbines following ignition, a large portion of the energy input to the combustion turbine is used for heating the turbine casings and rotors, boiler tubes, main steam piping, and other portions of the thermal system rather than the production of electricity. During this startup period, the steam turbine does not generate electricity in a combined cycle mode until the thermal equipment is at an appropriate operating temperature and sufficient steam is produced in the heat recovery steam generator. Therefore, LPEC proposes that the 12 month rolling average output based BACT limits exclude startup hours. For purposes of compliance with the emission limits for non-GHG pollutants, the startup period is defined as the period of time when there is measurable fuel flow to the combustion turbine and ends when the combustion turbine load reaches 60 percent. However, for purposes of an output based GHG emission limit, the plant start up period will be defined as the period of time when there is measurable fuel flow to the combustion turbine and ends when the steam turbine is synchronized to the electrical grid. The annual emissions of GHG and CO_2e during periods of startup are provided on Tables 3-3, 3-5, and 3-7.

On March 27, 2012, the EPA proposed New Source Performance Standard (NSPS), Subpart TTTT, that would control GHG emissions from new power plants.[26] The proposed rule would apply to fossil-fuel fired electric generating units that generate electricity for sale and are larger than 25 MW. The EPA proposed that new power plants meet an annual average output based standard of 1,000 lb CO_2/MWh gross. The proposed emission rate for the LPEC turbines on a gross electrical output basis range from 874.2 – 882.4 lb CO_2/MWh without duct burner firing and 909.2 to 934.5 lb/MWh with maximum duct burner firing. The proposed CO_2 emission rates from the LPEC combined cycle turbines are well within the emission limit in proposed NSPS Subpart TTTT.

LPEC performed a search of the EPA's RACT/BACT/LAER Clearinghouse for natural gas fired combustion turbine generators and found no entries which address BACT for GHG emissions. Although not listed in the RACT/BACT/LAER Clearinghouse, a GHG BACT analysis was performed by the following natural gas fired power generation facilities: Russell City Energy Center, Palmdale Hybrid Power Plant, Lower Colorado River Authority Ferguson Plant, Cricket Valley Energy Center, Pioneer Valley Energy Center, Deer Park Energy Center, and Channel Energy Center. A discussion of the LPEC's proposed BACT as compared to those projects is provided below:

Palmdale Hybrid Power Project

The application for the Palmdale Hybrid Power Project (PHPP) was submitted in May 2011 and a final permit was issued by the Antelope Valley Air Quality Management District on October 18, 2011. The permit authorizes the construction of two natural-gas-fired GE 7FA combustion turbine generators, with 500 MMBtu/hr duct fired heat recovery steam generators, and one steam turbine generator to be located in Palmdale, California. The project included a 50 MW, 251 acre solar thermal array field with a solar steam boiler on the 333 acre site. The permit

[26] Standards of Performance for Greenhouse Gas Emissions for New Stationary Sources: Electric Utility Generating Units, 77 Fed Reg 22392, April 13, 2012

US EPA ARCHIVE DOCUMENT

listed a GHG BACT limit of 774 lb CO_2/MW-hr source-wide net output and 7,319 Btu/kWhr source wide net heat rate, 365 rolling average.

The application submitted by PHPP represented as BACT, a heat rate of 6,970 Btu/kWh, based on the higher heating value (HHV) of natural gas with two CTGs operating at 100% with no solar input and with no duct firing.[27] The PHPP application did not state whether the 6,970 Btu/kWh heat rate represented as BACT, is on a gross electrical output basis or a net electrical output basis. A CO_2 emission rate of 0.408 short tons of CO_2/MW-hr was derived from the heat rate of 6,970 Btu/Kw-hr, based on a CO_2 emission factor of 53.06 kg CO_2/MMBtu. 0.408 short tons of CO_2/MW-hr equates to 816 lb CO_2/MW-hr.

The BACT representations in the Palmdale permit and the application cannot be directly compared to the representations for the LPEC for the following reasons:

1. The permit limit of 774 lb CO_2/MW-hr does not correspond to the representations in the PHPP application. PHPP represented a CO_2 emission rate of 0.408 short tons CO_2/MW-hr (816 lb CO_2/MW-hr) for the two combustion turbines, without duct burner firing which was derived from the represented design heat rate of 6,970 Btu/kW-hr. The CO_2 emission rate associated with the permit heat rate limit of 7,319 Btu/kW-hr would be 856.9 lb CO_2/MW-hr. The basis of the 774 lb CO_2/MWhr permit limit is unclear.

2. The U.S. EPA, Region 9, in its response to comments, stated that the BACT limit was being set at 7,319 Btu/kWh to account for "a variety of factors that can affect heat rate, including seasonal variations (i.e. temperature, humidity) and equipment degradation".[28] The 7,319 Btu/kWh limit provides only a 5% compliance margin over the represented "design" heat rate of 6,970 Btu/kWh. This is not consistent with the Cricket Valley Energy Center, Pioneer Valley Energy Center, Lower Colorado River Authority Ferguson Plant, Deer Park Energy, and Channel Energy Center GHG permits discussed below. The Palmdale permit does not account for the design margin of the equipment or degradation of supporting equipment.

3. The "design" heat rate proposed by PHPP was for two CTGs operating at 100% load. The 365 day rolling average permit limit of 7,319 Btu/kW-hr does not account for lower efficiencies at reduced loads.

Lower Colorado River Authority Ferguson Plant

The application for the LCRA Ferguson Plant was submitted in March 2011. The application included two natural-gas-fired GE 7FA combustion turbines, heat recovery steam generators without no additional duct firing, and one steam turbine generator to be located in Marble Falls,

[27] AECOM Memorandum to Lisa Bingham and Joe Lapka, Response to EPA Comments on PHPP GHG BACT Analysis, July 15, 2011.
[28] U.S. Environmental Protection Agency, Region 9, "Responses to Public Comments on the Proposed Prevention of Significant Deterioration Permit for the Palmdale Hybrid Power Project", Oct. 2011.

US EPA ARCHIVE DOCUMENT

Texas. The permit, issued November 10, 2011, included BACT limits of 0.459 ton CO_2/MWh (net) on a 365 day rolling average and an average net heat rate of 7,720 Btu/kWh (HHV) on a 365 day rolling average.

For comparison purposes, the proposed heat rates for the General Electric 7FA, Siemens SGT6-5000F(4), and Siemens SGT6-5000F(5) turbines, without duct firing, are 7,527.5, 7649.0, and 7,771.7 Btu/kWh (HHV, net basis), respectively, which accounts for design margins, performance margins, and degradation margins. The proposed emission rates on a ton CO_2/MWh (net) basis for General Electric 7FA, Siemens SGT6-5000F(4), and Siemens SGT6-5000F(5) turbines are 0.447, 0.455, and 0.459 ton CO_2/MWh (net).

Cricket Valley Energy Center

The Cricket Valley Energy Center (CVEC) air permit application proposed the construction of three natural-gas-fired GE 7FA combustion turbines, with 596.8 MMBtu/hr duct fired heat recovery steam generators, and three steam turbine generators to be located in Dover, New York. The CVEC application represented that the GE 7FA turbines operating in combined cycle mode have a design base heat rate of 6,742 Btu/kW-hr at ISO conditions with no duct firing (based on net output). Based upon the design efficiency, and adding a reasonable margin of compliance, CVEC proposed a limit of 7,605 Btu/kW-hr (ISO conditions without duct firing) as BACT for the proposed project. The draft permit specifies that the facility is required conduct a thermal efficiency test on a minimum of one combustion turbine annually.

For comparison purposes, LPEC proposes heat rates for the General Electric 7FA, Siemens SGT6-5000F(4), and Siemens SGT6-5000F(5) turbines, without duct firing, of 7,527.5, 7649.0, and 7,771.7 Btu/kWh (HHV, net basis), respectively, which accounts for design margins, performance margins, and degradation margins. The highest proposed heat rate for the LPEC application is within 1.6% of the proposed CVEC proposed limit and the lowest proposed heat rate is 1.2% lower than the proposed CVEC proposed limit. The efficiencies from two similarly sized combined cycle electric generating units will not be identical due to differences in the properties and variability of the natural gas; the geographic location - higher combustion turbine efficiencies are achieved at lower elevations and at cooler ambient temperatures due to denser ambient air; differences in combustion turbine designs, heat recovery steam generator designs and steam turbine designs; and electric generating unit load generation flexibility requirements - operating an electric generating unit as a base load unit is more efficient than operating as a load cycling unit to respond to fluctuations in customer electricity or steam demands.

Pioneer Valley Energy Center

The Pioneer Valley Energy Center (PVEC) air permit application proposed the construction of a 431 MW natural-gas-fired combined cycle turbine generator to be located in Westfield, Massachusetts. The PVEC air application proposed to construct a Mitsubishi M501G combined cycle turbine. The air permit for the project was issued April 12, 2012. The permit contained an initial GHG limit of 825 lbs of CO_2e/MWh_{grid} to be demonstrated during initial performance test and a 365-day rolling average limit of 895 lbs of CO_2e/MWh_{grid}.

US EPA ARCHIVE DOCUMENT

For comparison purposes, LPEC proposes CO_2e emission rates for the General Electric 7FA, Siemens SGT6-5000F(4), and Siemens SGT6-5000F(5) turbines of 895.6, 910.0, and 924.6 lb CO_2e/MWh (net basis), respectively, which accounts for design margins, performance margins, and degradation margins. The highest proposed CO2e emission rate in the LPEC application is within 3.3% of the proposed PVEC limit and the lowest proposed CO2e emission rate is within 0.07% of the proposed PVEC limit. The efficiencies from two similarly sized combined cycle electric generating units will not be identical due to differences in the properties and variability of the natural gas; the geographic location - higher combustion turbine efficiencies are achieved at lower elevations and at cooler ambient temperatures due to denser ambient air; differences in combustion turbine designs, heat recovery steam generator designs and steam turbine designs; and electric generating unit load generation flexibility requirements - operating an electric generating unit as a base load unit is more efficient than operating as a load cycling unit to respond to fluctuations in customer electricity or steam demands.

Deer Park Energy Center

The application for the Calpine Deer Park Energy Center was submitted in September 2011 and a draft permit has not yet been issued. The application proposed to authorize a fifth Siemens 501F CTG/HRSG train and ancillary equipment at the existing Deer Park Energy Center located in Deer Park, Texas. The Deer Park application represented a BACT net heat rate for the Project of 7,730 Btu/kWh (HHV), corrected to ISO conditions.

For comparison purposes, the proposed net heat rates for the General Electric 7FA, Siemens SGT6-5000F(4), and Siemens SGT6-5000F(5) turbines, without duct firing, are 7,527.5, 7649.0, and 7,771.7 Btu/kWh (HHV, net basis), respectively, which accounts for design margins, performance margins, and degradation margins.

Channel Energy Center

The application for the Calpine Channel Energy Center was submitted in October 2011 and a draft permit has not yet been issued. The application proposed to authorize a third Siemens 501F CTG/HRSG train and ancillary equipment at the existing Channel Energy Center located in Pasadena, Texas. The Channel Energy application represented a BACT net heat rate for the Project of 7,730 Btu/kWh (HHV), corrected to ISO conditions.

For comparison purposes, the proposed net heat rates for the General Electric 7FA, Siemens SGT6-5000F(4), and Siemens SGT6-5000F(5) turbines are 7,527.5, 7649.0, and 7,771.7 Btu/kWh (HHV, net basis), respectively, which accounts for design margins, performance margins, and degradation margins

US EPA ARCHIVE DOCUMENT

5.2 BACT FOR SF_6 INSULATED ELECTRICAL EQUIPMENT

5.2.1 Step 1: Identify All Available Control Technologies

Step 1 of the Top-Down BACT analysis is to identify all feasible control technologies. One technology is the use of state-of-the-art SF_6 technology with leak detection to limit fugitive emissions. In comparison to older SF_6 circuit breakers, modern breakers are designed as a totally enclosed-pressure system with far lower potential for SF_6 emissions. In addition, the effectiveness of leak-tight closed systems can be enhanced by equipping them with a density alarm that provides a warning when 10% of the SF_6 (by weight) has escaped. The use of an alarm identifies potential leak problems before the bulk of the SF_6 has escaped, so that it can be addressed proactively in order to prevent further release of the gas.

One alternative considered in this analysis is to substitute another, non-GHG substance for SF_6 as the dielectric material in the breakers. Potential alternatives to SF_6 were addressed in the National Institute of Standards and Technology (NTIS) Technical Note 1425, *Gases for Electrical Insulation and Arc Interruption: Possible Present and Future Alternatives to Pure SF_6.*[29]

5.2.2 Step 2: Eliminate Technically Infeasible Options

According to the report NTIS Technical Note 1425, SF_6 is a superior dielectric gas for nearly all high voltage applications.[30] It is easy to use, exhibits exceptional insulation and arc-interruption properties, and has proven its performance by many years of use and investigation. It is clearly superior in performance to the air and oil insulated equipment used prior to the development of SF_6-insulated equipment. The report concluded that although "…various gas mixtures show considerable promise for use in new equipment, particularly if the equipment is designed specifically for use with a gas mixture… it is clear that a significant amount of research must be performed for any new gas or gas mixture to be used in electrical equipment." Therefore there are currently no technically feasible options besides use of SF_6.

5.2.3 Step 3: Rank Remaining Control Technologies

The use of state-of-the-art SF_6 technology with leak detection to limit fugitive emissions is the highest ranked control technology that is technically feasible for this application.

[29] Christophorous, L.G., J.K. Olthoff, and D.S. Green, *Gases for Electrical Insulation and Arc Interruption: Possible Present and Future Alternatives to Pure SF_6,* NIST Technical Note 1425, Nov.1997.

[30] *Id.* at 28 – 29.

US EPA ARCHIVE DOCUMENT

5.2.4 Step 4: Evaluate Most Effective Controls and Document Results

Energy, environmental, or economic impacts were not addressed in this analysis because the use of alternative, non-greenhouse-gas substance for SF_6 as the dielectric material in the breakers is not technically feasible.

5.2.5 Step 5: Select BACT

Based on this top-down analysis, LPEC concludes that using state-of-the-art enclosed-pressure SF_6 circuit breakers with leak detection would be the BACT control technology option. The circuit breakers will be designed to meet the latest of the American National Standards Institute (ANSI) C37.013 standard for high voltage circuit breakers.[31] The proposed circuit breaker at the generator output will have a low pressure alarm and a low pressure lockout. This alarm will function as an early leak detector that will bring potential fugitive SF_6 emissions problems to light before a substantial portion of the SF_6 escapes. The lockout prevents any operation of the breaker due to lack of "quenching and cooling" SF_6 gas.

LPEC will monitor emissions annually in accordance with the requirements of the Mandatory Greenhouse Gas Reporting rules for Electrical Transmission and Distribution Equipment Use.[32] Annual SF_6 emissions will be calculated according to the mass balance approach in Equation DD-1 of Subpart DD.

5.3 BACT FOR AUXILIARY BOILER

One nominally rated 150 MMBtu/hr auxiliary boiler (EPN AUXBLR) will be utilized to facilitate startup of the combined cycle units. The auxiliary boiler will be limited to 876 hours of operation per year.

5.3.1 Step 1: Identify All Available Control Technologies

Step 1 of the Top-Down BACT analysis is to identify all feasible control technologies. The following technologies were identified as potential control options for boilers:

- Use of low carbon fuels
- Use of good operating and maintenance practices
- Energy efficient design
- Low Annual Capacity

The auxiliary boiler will utilize natural gas which is the lowest carbon fuel available at the LPEC site. Therefore, formation of CO_2 from combustion of the fuel will be minimized.

[31] ANSI Standard C37.013, *Standard for AC High-Voltage Generator Circuit Breakers on a Symmetrical Current*.

[32] *See* 40 C.F.R. Pt. 98, Subpt. DD.

US EPA ARCHIVE DOCUMENT

Good operating and maintenance practices for the boiler include following the manufacturer's recommended operating and maintenance procedures; maintaining good fuel mixing in the combustion zone; and maintain the proper air/fuel ratio so that sufficient oxygen is provided to provide complete combustion of the fuel while at the same time preventing introduction of more air than is necessary into the boiler.

The auxiliary boiler is designed for a thermal energy efficiency of approximately 80%. The energy efficient design of the boiler includes insulation to retain heat within the boiler and a computerized process control system that will optimize the fuel/air mixture and limit excess air in the boiler.

The auxiliary boiler will be used to facilitate startup of the two combustion turbines and the annual hours of operation will be limited to 876 hours per year.

5.3.2 Step 2: Eliminate Technically Infeasible Options

This step of the top-down BACT analysis eliminates any control technology that is not considered technically feasible unless it is both available and applicable.

Use of natural gas as a low carbon fuel is technically feasible for this emission source.

Use of good operating and maintenance practices is technically feasible for this emission source.

Use of an energy efficient design for the boiler is technically feasible.

Use of a low annual capacity for the auxiliary boiler is technical feasible since the boiler is only used to facilitate startups for the two combustion turbines.

5.3.3 Step 3: Rank Remaining Control Technologies

As all of the energy efficiency related processes, practices, and designs discussed in Section 5.3.1 of this application are being proposed for the auxiliary boiler, a ranking of the control technologies is not necessary for this application.

5.3.4 Step 4: Evaluate Most Effective Controls and Document Results

As all of the energy efficiency related processes, practices, and designs discussed in Section 5.3.1 of this application are being proposed for this project, an examination of the energy, environmental, and economic impacts of the efficiency designs is not necessary for this application.

US EPA ARCHIVE DOCUMENT

5.3.5 Step 5: Select BACT

Based on this top-down analysis, LPEC concludes that the use of natural gas as a low carbon fuel; good operating and maintenance practices; energy efficient design; and low annual capacity is selected as BACT for the auxiliary boiler. With the limit annual operation of the auxiliary boiler, the total CO_2e emissions from the boilers are 0.23% of the total site wide emissions.

Among other recently issued or currently pending GHG permits, the Wolverine Power Supply Cooperative permit and the Palmdale Hybrid Power Project permit included BACT determinations for limited use, auxiliary boilers and heaters. The Wolverine Permit included a 72.4 MMBtu/hr diesel-fired auxiliary boiler, limited to 4,000 hours operation per year. The Permit listed BACT for GHG for the auxiliary boiler to incorporate energy efficient equipment wherever practical in the design of the auxiliary boiler. The Wolverine Permit did not include an output based BACT limit for the auxiliary boiler.

The application for the Palmdale Hybrid Power Project (PHPP) was submitted in May 2011 and a draft permit was issued by the Antelope Valley Air Quality Management District in August 2011. The PHPP application proposed the construction of a power plant utilizing natural-gas-fired combustion turbine combined cycle generators located in Palmdale, California. The project also included a 110 MMBtu/hr natural-gas-fired auxiliary boiler, limited to 500 hours per year operation, and a 40 MMBtu/hr natural-gas-fired heater, limited to 1,000 hours per year operation. The Palmdale Permit listed BACT for GHG for the auxiliary boiler and heater as annual tune-ups. The Palmdale Permit did not include an output based BACT limit for the auxiliary boiler or heater.

5.4 BACT FOR EMERGENCY ENGINES

The LPEC site will be equipped with one nominally rated 1,072-hp diesel-fired emergency generator to provide electricity to the facility in case of power failure and one nominally rated 500-hp diesel-fired pump to provide water in the event of a fire.

5.4.1 Step 1: Identify All Available Control Technologies

Step 1 of the Top-Down BACT analysis is to identify all feasible control technologies. The following technologies were identified as potential control options for emergency engines:

- Use of low carbon fuel;
- Use of good operating and maintenance practices;
- Low annual capacity factor.

Engine options includes engines powered with electricity, natural gas, or liquid fuel, such as gasoline or fuel oil.

US EPA ARCHIVE DOCUMENT

Good operating and maintenance practices for the engines include the following:

- Operating with recommended fuel to air ratio recommended by the manufacturer and
- Appropriate maintenance of equipment, such as periodic readiness testing.

The energy efficiency (energy output divided by energy input) associated with the emergency generator is 34.0% and the energy efficiency associated with the fire pump engine is 36.8%. These are typical efficiencies for emergency engines.

Each emergency engine will be limited to 100 hours operation per year for purposes of maintenance checks and readiness testing.

5.4.2 Step 2: Eliminate Technically Infeasible Options

This step of the top-down BACT analysis eliminates any control technology that is not considered technically feasible unless it is both available and applicable. The purpose of the engines is to provide a power source during emergencies, which includes outages of the combustion turbines, natural gas supply outages, and natural disasters, such as floods and hurricanes. As such, the engines must be available during emergencies. Electricity and natural gas may not be available during an emergency and therefore cannot be used as an energy source for the emergency engines.

The engines must be powered by a liquid fuel that can be stored on-site in a tank and supplied to the engines on demand, such as motor gasoline or diesel. The default CO_2 emission factors for gasoline and diesel are very similar, 70.22 kg/MMBtu for gasoline and 73.96 kg/MMBtu for diesel. Diesel fuel has a much lower volatility than gasoline and can be stored for longer periods of time. Therefore, diesel is typically the chosen fuel for emergency engines.

Because of the need to store the emergency engine fuel on-site and the ability to store diesel for longer periods of time than gasoline, it is technically infeasible to utilize a lower carbon fuel than diesel.

The use of good operating and maintenance practices is technically feasible for the emergency engines. Also, a low annual capacity factor for the engines is technically feasible since the engines will only be operated either for readiness testing or for actual emergencies.

5.4.3 Step 3: Rank Remaining Control Technologies

Since the remaining technically feasible processes, practices, and designs discussed in Section 5.4.1 of this application for the emergency engines are being proposed for the engines, a ranking of the control technologies is not necessary for this application.

US EPA ARCHIVE DOCUMENT

5.4.4 Step 4: Evaluate Most Effective Controls and Document Results

Since the remaining technically feasible processes, practices, and designs discussed in Section 5.4.1 of this application for the emergency engines are being proposed for the engines, an evaluation of the most effective controls is not necessary for this application.

5.4.5 Step 5: Select BACT

As a result of this analysis, appropriate operation of the engines through proper fuel to air ratios and maintenance based on recommended readiness testing and low annual hours of operation are selected as BACT for the proposed engines.

5.5 BACT FOR NATURAL GAS FUGITIVES

The proposed project will include natural gas piping components. These components are potential sources of methane and CO_2 emissions due to emissions from rotary shaft seals, connection interfaces, valve stems, and similar points.

5.5.1 Step 1: Identify All Available Control Technologies

Step 1 of the Top-Down BACT analysis is to identify all feasible control technologies. The following technologies were identified as potential control options for piping fugitives:

- Implementation of leak detection and repair (LDAR) program using a hand held analyzer;
- Implementation of alternative monitoring using a remote sensing technology such as infrared cameras; and
- Implementation of audio/visual/olfactory (AVO) leak detection program

5.5.2 Step 2: Eliminate Technically Infeasible Options

This step of the top-down BACT analysis eliminates any control technology that is not considered technically feasible unless it is both available and applicable. The use of instrument LDAR and remote sensing technologies are technically feasible. Since pipeline natural gas is odorized with a small amount of mercaptan, an AVO leak detection program for natural gas piping components is technically feasible.

5.5.3 Step 3: Rank Remaining Control Technologies

The use of a LDAR program with a portable gas analyzer meeting the requirements of 40 CFR 60, Appendix A, Method 21, can be effective for identifying leaking methane. Quarterly instrument monitoring with a leak definition of 10,000 part per million by volume (ppmv) (TCEQ 28M LDAR Program) is generally assigned a control efficiency of 75% for valves, relief valves,

US EPA ARCHIVE DOCUMENT

sampling connections, and compressors and 30% for flanges.[33] Quarterly instrument monitoring with a leak definition of 500 ppmv (TCEQ 28VHP LDAR Program) is generally assigned a control efficiency of 97% for valves, relief valves, and sampling connections, 85% for compressors, and 30% for flanges.[34] The U.S. EPA has allowed the use of an optical gas imaging instrument as an alternative work practice for a Method 21 portable analyzer for monitoring equipment for leaks in 40 CFR 60.18(g). For components containing inorganic or odorous compounds, periodic AVO walk-through inspections provide predicted control efficiencies of 97% control for valves, flanges, relief valves, and sampling connections, and 95% for compressors.[35]

5.5.4 Step 4: Evaluate Most Effective Controls and Document Results

The frequency of inspection and the low odor threshold of mercaptans in natural gas make AVO inspections an effective means of detecting leaking components in natural gas service. As discussed in Section 5.5.3, the predicted emission control efficiency is comparable to the LDAR programs using Method 21 portable analyzers.

5.5.5 Step 5: Select BACT

Due to the very low Volatile Organic Compound (VOC) content of natural gas, the LPEC will not be subject to any VOC leak detection programs by way of its State/PSD air permit, TCEQ Chapter 115 – Control of Air Pollution from Volatile Organic Compounds, New Source Performance Standards (40 CFR Part 60), National Emission Standard for Hazardous Air Pollutants (40 CFR Part 61); or National Emission Standard for Hazardous Air Pollutants for Source Categories (40 CFR Part 63). Therefore, any leak detection program implemented will be solely due to potential greenhouse emissions. Since the uncontrolled CO_2e emissions from the natural gas piping represent approximately 0.01% of the total site wide CO_2e emissions, any emission control techniques applied to the piping fugitives will provide minimal CO_2e emission reductions.

Based on this top-down analysis, LPEC concludes that daily AVO inspections is BACT for piping components in natural gas service.

[33] Air Permit Technical Guidance for Chemical Sources: Equipment Leak Fugitives, TCEQ, Oct. 2000

[34] Id. at page 52.

[35] Id. at page 52.

US EPA ARCHIVE DOCUMENT

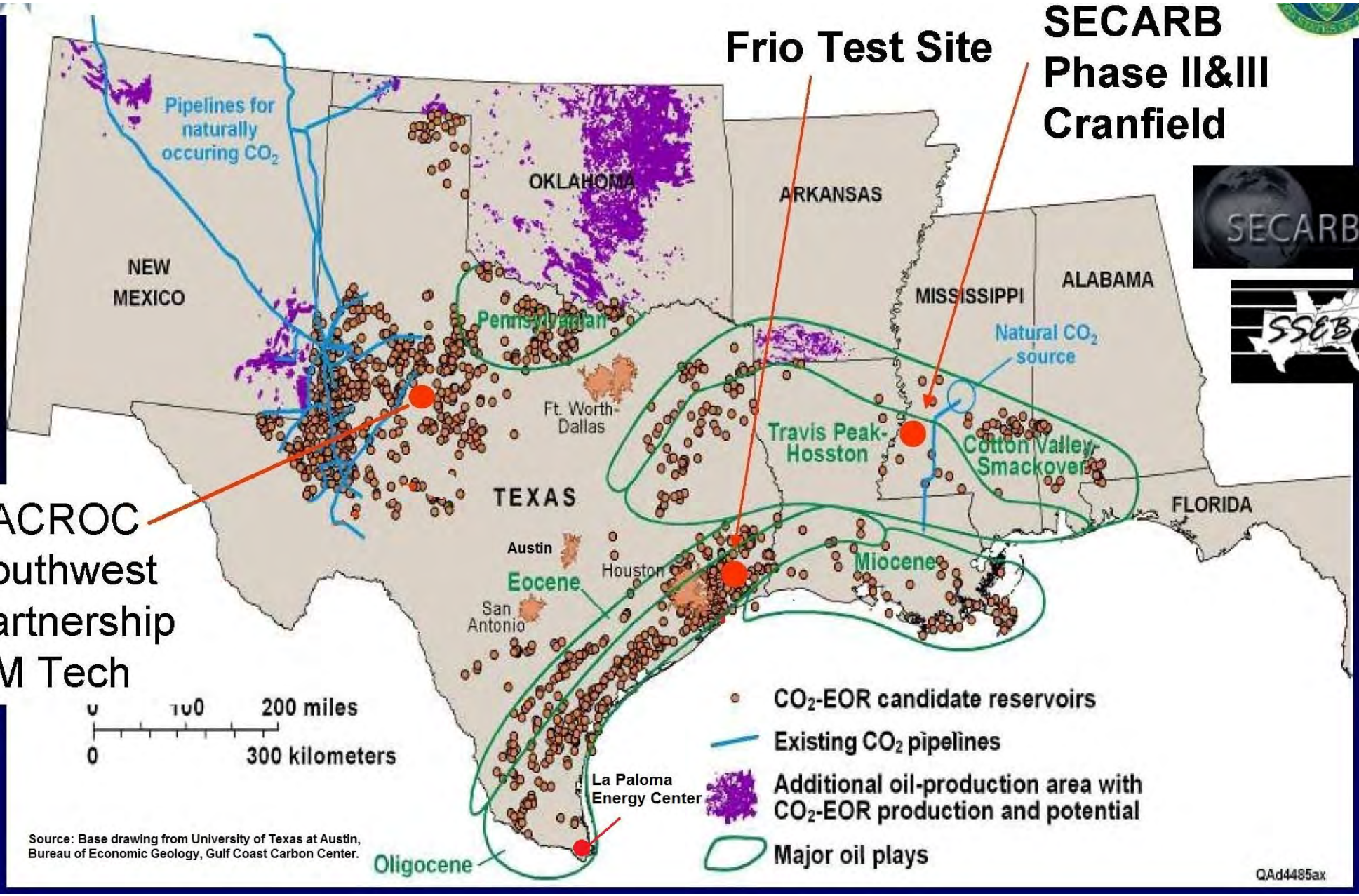
Frio Test Site
SECARB
Phase II&III
Cranfield
SACROC
Southwest
Partnership
NM Tech
Pipelines for naturally occuring CO_2
NEW MEXICO
OKLAHOMA
ARKANSAS
MISSISSIPPI
ALABAMA
FLORIDA
TEXAS
Pennsylvanian
Ft. Worth-Dallas
Natural CO_2 source
Travis Peak-Hosston
Cotton Valley-Smackover
Austin
Houston
San Antonio
Eocene
Miocene
Oligocene
La Paloma Energy Center
0 100 200 miles
0 300 kilometers
CO_2-EOR candidate reservoirs
Existing CO_2 pipelines
Additional oil-production area with CO_2-EOR production and potential
Major oil plays
Source: Base drawing from University of Texas at Austin, Bureau of Economic Geology, Gulf Coast Carbon Center.
QAd4485ax

Table 5-1
GHG Emission Calculations - Calculation of Design Heat Rate Limit for GE 7FA
La Paloma Energy Center

	Net Output	Gross Output	
Base Heat Rate	**6,674.4**	**6521.2**	**Btu/kWH (HHV) (ISO Conditions, Without Duct Firin**
	3.3%	**3.3%**	**Design Margin**
	6.0%	**6.0%**	**Performance Margin**
	3.0%	**3.0%**	**Degradation Margin**
Calculated Base Heat Rate with Compliance Margins	**7527.5**	**7354.8**	**Btu/kWH (HHV) (Without Duct Firing)**

Calculation of lb CO2e/MWhr Heat Rate Limit Without Duct Burner Firing

EPN	Base Heat Rate (Btu/kWhr)	Electrical Output Basis	Heat Input Required to Produce 1 MW (MMBtu/MWhr)	Pollutant	Emission Factor (kg/MMBtu)[1]	lb GHG/MWhr[2]	Global Warming Potential[3]	lb CO_2e/MWhr[4]
CTG/HRSG3	7527.5	Net	7.53	CO_2		894.703	1	894.703
				CH_4	1.0E-03	1.66E-02	21	3.49E-01
				N_2O	1.0E-04	1.66E-03	310	5.14E-01
						894.7		**895.6**
CTG/HRSG3	7354.8	Gross	7.35	CO_2		874.169	1	874.169
				CH_4	1.0E-03	1.62E-02	21	3.41E-01
				N_2O	1.0E-04	1.62E-03	310	5.03E-01
					Totals	**874.2**		**875.0**

	Net Output	Gross Output	
Base Heat Rate	**7,050.7**	**6970.7**	**Btu/kWH (HHV) (ISO Conditions, With Duct Firing)**
	3.3%	**3.3%**	**Design Margin**
	6.0%	**6.0%**	**Performance Margin**
	3.0%	**3.0%**	**Degradation Margin**
Calculated Base Heat Rate with Compliance Margins	**7951.9**	**7861.8**	**Btu/kWH (HHV) (With Duct Firing)**

Calculation of lb CO2e/MWhr Heat Rate Limit With Duct Burner Firing

EPN	Base Heat Rate (Btu/kWhr)	Electrical Output Basis	Heat Input Required to Produce 1 MW (MMBtu/MWhr)	Pollutant	Emission Factor (kg/MMBtu)[1]	lb GHG/MWhr[2]	Global Warming Potential[3]	lb CO_2e/MWhr[4]
CTG/HRSG3	7951.9	Net	7.95	CO_2		945.144	1	945.144
				CH_4	1.0E-03	1.75E-02	21	3.68E-01
				N_2O	1.0E-04	1.75E-03	310	5.43E-01
						945.2		**946.1**
CTG/HRSG3	7861.8	Gross	7.86	CO_2		934.431	1	934.431
				CH_4	1.0E-03	1.73E-02	21	3.64E-01
				N_2O	1.0E-04	1.73E-03	310	5.37E-01
					Totals	**934.5**		**935.3**

Note

1. *CH_4* and N_2O GHG factors based on Table C-2 of 40 CFR 98 Mandatory Greenhouse Gas Reporting.
2. *CO_2 emissions based on 40 CFR Part 75, Appendix G, Equation G-4*

$W_{CO2} = (Fc \times H \times U_f \times MW_{CO2})/2000$

$W_{CO2} = CO_2$ emitted from combustion, tons/yr

Fc = Carbon based F-factor,1040 scf/MMBtu

H = Heat Input (MMBtu/yr)

U_f = 1/385 scf CO_2/lbmole at 14.7 psia and 68 ^oF

MW_{CO2} = Molecule weight of CO_2, 44.0 lb/lbmole

3. *Global Warming Potential factors based on Table A-1 of 40 CFR 98 Mandatory Greenhouse Gas Reporting.*
4. *Example calculation: GHG emissions (lbs) x Global Warming Potential / 1 MW = lb CO2e/MWhr*

US EPA ARCHIVE DOCUMENT

Table 5-2
GHG Emission Calculations - Calculation of Design Heat Rate Limit for Siemens SGT6-5000F(4)
La Paloma Energy Center

	Net Output	Gross Output	
Base Heat Rate	**6,782**	**6615.5**	**Btu/kWH (HHV) (ISO Conditions, Without Duct Firin**
	3.3%	**3.3%**	**Design Margin**
	6.0%	**6.0%**	**Performance Margin**
	3.0%	**3.0%**	**Degradation Margin**
Calculated Base Heat Rate with Compliance Margins	**7649.0**	**7461.2**	**Btu/kWH (HHV) (Without Duct Firing)**

Calculation of lb CO2e/MWhr Heat Rate Limit Without Duct Burner Firing

EPN	Base Heat Rate (Btu/kWhr)	Electrical Output Basis	Heat Input Required to Produce 1 MW (MMBtu/MWhr)	Pollutant	Emission Factor (kg/MMBtu)[1]	lb GHG/MWhr[2]	Global Warming Potential[3]	lb CO_2e/MWhr[4]
CTG/HRSG3	7649.0	Net	7.65	CO_2		909.136	1	909.136
				CH_4	1.0E-03	1.69E-02	21	3.54E-01
				N_2O	1.0E-04	1.69E-03	310	5.23E-01
						909.2		**910.0**
CTG/HRSG3	7461.2	Gross	7.46	CO_2		886.817	1	886.817
				CH_4	1.0E-03	1.64E-02	21	3.45E-01
				N_2O	1.0E-04	1.64E-03	310	5.10E-01
					Totals	**886.8**		**887.7**

	Net Output	Gross Output	
Base Heat Rate	**7,045.1**	**6782.0**	**Btu/kWH (HHV) (ISO Conditions, With Duct Firing)**
	3.3%	**3.3%**	**Design Margin**
	6.0%	**6.0%**	**Performance Margin**
	3.0%	**3.0%**	**Degradation Margin**
Calculated Base Heat Rate with Compliance Margins	**7945.7**	**7649.0**	**Btu/kWH (HHV) (With Duct Firing)**

Calculation of lb CO2e/MWhr Heat Rate Limit With Duct Burner Firing

EPN	Base Heat Rate (Btu/kWhr)	Electrical Output Basis	Heat Input Required to Produce 1 MW (MMBtu/MWhr)	Pollutant	Emission Factor (kg/MMBtu)[1]	lb GHG/MWhr[2]	Global Warming Potential[3]	lb CO_2e/MWhr[4]
CTG/HRSG3	7945.7	Net	7.95	CO_2		944.400	1	944.400
				CH_4	1.0E-03	1.75E-02	21	3.68E-01
				N_2O	1.0E-04	1.75E-03	310	5.43E-01
						944.4		**945.3**
CTG/HRSG3	7649.0	Gross	7.65	CO_2		909.136	1	909.136
				CH_4	1.0E-03	1.69E-02	21	3.54E-01
				N_2O	1.0E-04	1.69E-03	310	5.23E-01
					Totals	**909.2**		**910.0**

Note

1. *CH_4* and N_2O GHG factors based on Table C-2 of 40 CFR 98 Mandatory Greenhouse Gas Reporting.
2. *CO_2 emissions based on 40 CFR Part 75, Appendix G, Equation G-4*

$W_{CO2} = (Fc \times H \times U_f \times MW_{CO2})/2000$

$W_{CO2} = CO_2$ emitted from combustion, tons/yr

Fc = Carbon based F-factor,1040 scf/MMBtu

H = Heat Input (MMBtu/yr)

U_f = 1/385 scf CO_2/lbmole at 14.7 psia and 68 ^oF

MW_{CO2} = Molecule weight of CO_2, 44.0 lb/lbmole

3. *Global Warming Potential factors based on Table A-1 of 40 CFR 98 Mandatory Greenhouse Gas Reporting.*
4. *Example calculation: GHG emissions (lbs) x Global Warming Potential / 1 MW = lb CO2e/MWhr*

US EPA ARCHIVE DOCUMENT

Table 5-3
GHG Emission Calculations - Calculation of Design Heat Rate Limit for Siemens SGT6-5000F(5)
La Paloma Energy Center

	Net Output	Gross Output	
Base Heat Rate	**6,891**	**6582.2**	**Btu/kWH (HHV) (ISO Conditions, Without Duct Firin**
	3.3%	**3.3%**	**Design Margin**
	6.0%	**6.0%**	**Performance Margin**
	3.0%	**3.0%**	**Degradation Margin**
Calculated Base Heat Rate with Compliance Margins	**7771.7**	**7423.6**	**Btu/kWH (HHV) (Without Duct Firing)**

Calculation of lb CO2e/MWhr Heat Rate Limit Without Duct Burner Firing

EPN	Base Heat Rate (Btu/kWhr)	Electrical Output Basis	Heat Input Required to Produce 1 MW (MMBtu/MWhr)	Pollutant	Emission Factor (kg/MMBtu)[1]	lb GHG/MWhr[2]	Global Warming Potential[3]	lb CO_2e/MWhr[4]
CTG/HRSG3	7771.7	Net	7.77	CO_2		923.718	1	923.718
				CH_4	1.0E-03	1.71E-02	21	3.60E-01
				N_2O	1.0E-04	1.71E-03	310	5.31E-01
						923.7		**924.6**
CTG/HRSG3	7423.6	Gross	7.42	CO_2		882.353	1	882.353
				CH_4	1.0E-03	1.64E-02	21	3.44E-01
				N_2O	1.0E-04	1.64E-03	310	5.07E-01
					Totals	**882.4**		**883.2**

	Net Output	Gross Output	
Base Heat Rate	**7,203.8**	**6808.7**	**Btu/kWH (HHV) (ISO Conditions, With Duct Firing)**
	3.3%	**3.3%**	**Design Margin**
	6.0%	**6.0%**	**Performance Margin**
	3.0%	**3.0%**	**Degradation Margin**
Calculated Base Heat Rate with Compliance Margins	**8124.7**	**7679.0**	**Btu/kWH (HHV) (With Duct Firing)**

Calculation of lb CO2e/MWhr Heat Rate Limit With Duct Burner Firing

EPN	Base Heat Rate (Btu/kWhr)	Electrical Output Basis	Heat Input Required to Produce 1 MW (MMBtu/MWhr)	Pollutant	Emission Factor (kg/MMBtu)[1]	lb GHG/MWhr[2]	Global Warming Potential[3]	lb CO_2e/MWhr[4]
CTG/HRSG3	8124.7	Net	8.12	CO_2		965.678	1	965.678
				CH_4	1.0E-03	1.79E-02	21	3.76E-01
				N_2O	1.0E-04	1.79E-03	310	5.55E-01
						965.7		**966.6**
CTG/HRSG3	7679.0	Gross	7.68	CO_2		912.707	1	912.707
				CH_4	1.0E-03	1.69E-02	21	3.56E-01
				N_2O	1.0E-04	1.69E-03	310	5.25E-01
					Totals	**912.7**		**913.6**

Note

1. *CH_4 and N_2O GHG factors based on Table C-2 of 40 CFR 98 Mandatory Greenhouse Gas Reporting.*
2. *CO_2 emissions based on 40 CFR Part 75, Appendix G, Equation G-4*

$W_{CO2} = (Fc \times H \times U_f \times MW_{CO2})/2000$

$W_{CO2} = CO_2$ emitted from combustion, tons/yr

Fc = Carbon based F-factor,1040 scf/MMBtu

H = Heat Input (MMBtu/yr)

U_f = 1/385 scf CO_2/lbmole at 14.7 psia and 68 ^oF

MW_{CO2} = Molecule weight of CO_2, 44.0 lb/lbmole

3. *Global Warming Potential factors based on Table A-1 of 40 CFR 98 Mandatory Greenhouse Gas Reporting.*
4. *Example calculation: GHG emissions (lbs) x Global Warming Potential / 1 MW = lb CO2e/MWhr*

US EPA ARCHIVE DOCUMENT

6.0 OTHER PSD REQUIREMENTS

6.1 IMPACTS ANALYSIS

An impacts analysis is not being provided with this application in accordance with EPA's recommendations:

> *Since there are no NAAQS or PSD increments for GHGs, the requirements in sections 52.21(k) and 51.166(k) of EPA's regulations to demonstrate that a source does not cause contribute to a violation of the NAAQS are not applicable to GHGs. Therefore, there is no requirement to conduct dispersion modeling or ambient monitoring for CO_2 or GHGs.*[36]

An impacts analysis for non-GHG emissions is being submitted with the State/PSD/Non-attainment application submitted to the TCEQ.

6.2 GHG PRECONSTRUCTION MONITORING

A pre-construction monitoring analysis for GHG is not being provided with this application in accordance with EPA's recommendations:

> *EPA does not consider it necessary for applicants to gather monitoring data to assess ambient air quality for GHGs under section 52.21(m)(1)(ii), section 51.166(m)(1)(ii), or similar provisions that may be contained in state rules based on EPA's rules. GHGs do not affect "ambient air quality" in the sense that EPA intended when these parts of EPA's rules were initially drafted. Considering the nature of GHG emissions and their global impacts, EPA does not believe it is practical or appropriate to expect permitting authorities to collect monitoring data for purpose of assessing ambient air impacts of GHGs.*[37]

A pre-construction monitoring analysis for non-GHG emissions is being submitted with the State/PSD/Nonattainment application submitted to the TCEQ.

6.3 ADDITIONAL IMPACTS ANALYSIS

A PSD additional impacts analysis is not being provided with this application in accordance with EPA's recommendations:

> *Furthermore, consistent with EPA's statement in the Tailoring Rule, EPA believes it is not necessary for applicants or permitting authorities to assess impacts from GHGs in the context of the additional impacts analysis or Class I area provisions of the PSD regulations for the following policy reasons. Although it is clear that GHG emissions*

[36] EPA, *PSD and Title V Permitting Guidance For Greenhouse Gases* at 48-49.

[37] *Id.* at 49.

US EPA ARCHIVE DOCUMENT

> *contribute to global warming and other climate changes that result in impacts on the environment, including impacts on Class I areas and soils and vegetation due to the global scope of the problem, climate change modeling and evaluations of risks and impacts of GHG emissions is typically conducted for changes in emissions orders of magnitude larger than the emissions from individual projects that might be analyzed in PSD permit reviews. Quantifying the exact impacts attributable to a specific GHG source obtaining a permit in specific places and points would not be possible with current climate change modeling. Given these considerations, GHG emissions would serve as the more appropriate and credible proxy for assessing the impact of a given facility. Thus, EPA believes that the most practical way to address the considerations reflected in the Class I area and additional impacts analysis is to focus on reducing GHG emissions to the maximum extent. In light of these analytical challenges, compliance with the BACT analysis is the best technique that can be employed at present to satisfy the additional impacts analysis and Class I area requirements of the rules related to GHGs.*[38]

A PSD additional impacts analysis for non-GHG emissions is being submitted with the State/PSD/Nonattainment application submitted to the TCEQ.

US EPA ARCHIVE DOCUMENT

7.0 PROPOSED GHG MONITORING PROVISIONS

LPEC proposes to monitor CO_2 emissions by monitoring the quantity of fuel combusted in the turbines and heat recovery steam generators and performing periodic fuel sampling as specified in 40 CFR 75.10(3)(ii) (refer to procedure below). Results of the fuel sampling will be used to calculate a site-specific Fc factor, and that factor will be used in the equation below to calculate CO_2 mass emissions.

The LPEC natural gas-fired turbines will comply with the fuel flow metering and Gross Calorific Value (GCV) sampling requirements of 40 CFR Part 75, Appendix D. The site-specific Fc factor will be determined using the ultimate analysis and Gross Calorific Value in equation F-7b of 40 CFR 75, Appendix F. The site-specific Fc factor will be re-determined annually in accordance with 40 CFR 75, Appendix F, §3.3.6.

The procedure for estimating CO_2 Emissions specified in 40 CFR 75.10(3)(ii) is as follows:

Affected gas-fired and oil-fired units may use the following equation:

$$W_{CO2} = (Fc \times H \times Uf \times MW_{CO2})/2000$$

Where:

W_{CO2} = *CO_2 emitted from combustion, tons/hr*

MW_{CO2} = *molecular weight of CO_2, 44.0 lb/lbmole*

Fc = Carbon Based Fc-Factor, (1040 scf/MMBtu for natural gas <u>or a site-specific Fc factor</u>)

H = Hourly heat input in MMBtu, as calculated using the procedure in 40 CFR 75, Appendix F, §5)

Uf = 1/385 scf CO_2/lb-mole at 14.7 psia and 68 °F

The requirements for fuel flow monitoring and quality assurance in 40 CFR 75 Appendix D are as follows:

Fuel flow meter: meet an accuracy of 2.0 %, required to be tested once each calendar quarter (40 CFR 75, Appendix D, §2.1.5 and §2.1.6(a))
Gross Calorific Value (GCV): determine the GCV of pipeline natural gas at least once per calendar month (40 CFR 75, Appendix D, §2.3.4.1)

This monitoring approach is consistent with the CO_2 reporting requirements of the GHG Mandatory Reporting Rule for Electricity Generation (40 CFR 98, Subpart D). Subpart D

US EPA ARCHIVE DOCUMENT

requires electric generating sources that report CO_2 emissions under 40 CFR 75 to report CO_2 under 40 CFR 98 by converting CO_2 tons reported under Part 75 to metric tons.

Also, the recently proposed NSPS Subpart TTTT –Standards of Performance for Greenhouse Gas Emissions for Electric Utility Generating Units ((40 CFR §60.5535(c)) allows electric generating units firing gaseous fuel and liquid fuel oil to determine CO_2 mass emissions by monitoring fuel combusted in the affected Electric Generating Unit and using a site specific Fc factor determined in accordance with 40 CFR 75, Appendix F. Therefore, LPEC's proposed CO_2 monitoring method is consistent with the proposed NSPS Subpart TTTT.

US EPA ARCHIVE DOCUMENT

US EPA ARCHIVE DOCUMENT

APPENDIX A

GHG PSD APPLICABILITY FLOWCHART – NEW SOURCES

Appendix A - GHG Applicability Flow Chart – New Sources (On or after July 1, 2011)

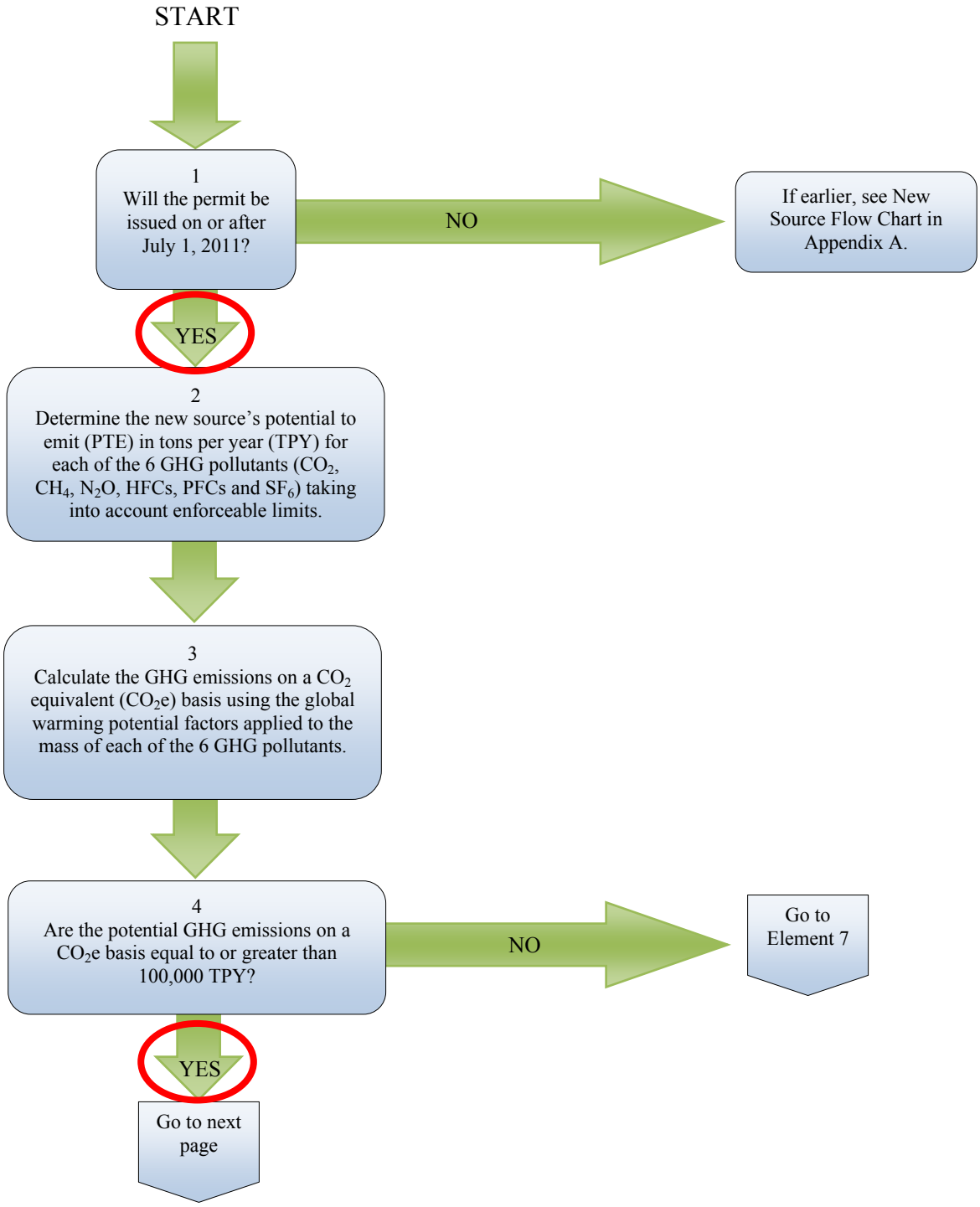

US EPA ARCHIVE DOCUMENT

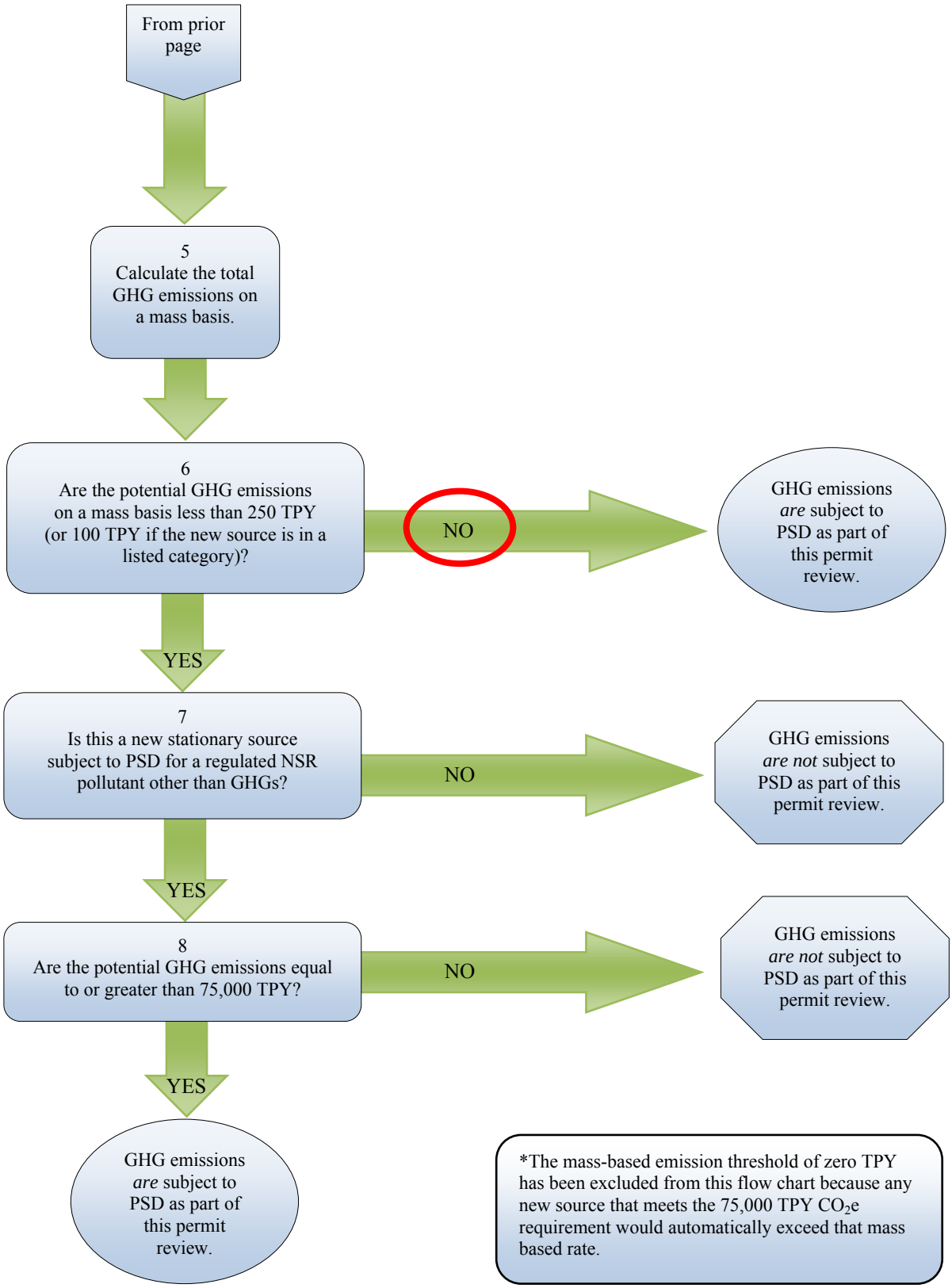

US EPA ARCHIVE DOCUMENT