US EPA ARCHIVE DOCUMENT

411 N. Sam Houston Parkway E., Suite 400, Houston, Texas 77060-3545 USA
T +1 281 448 6188 **F** +1 281 488 6189 **W** www.rpsgroup.com

US EPA ARCHIVE DOCUMENT

Application for
U.S. Environmental Protection Agency
Greenhouse Gas Air Quality Permit

KM Liquids Terminals LLC
Galena Park Terminal
Galena Park, Harris County, Texas

RN100237452
CN603254707

March 2012
Revised July 2012, January 2013, and March 2013

Table of Contents

List of Sections

Section 1 Introduction 1
1.1 Purpose of this Application 1
1.2 Application Organization 1

Section 2 Administrative Forms 4

Section 3 Area Map and Plot Plan 14

Section 4 Project and Process Description 18

Section 5 GHG Emissions Summary 25
5.1 Routine GHG Emissions 25
5.1.1 Heaters 25
5.1.2 Flare 26
5.1.3 Storage Tanks 26
5.1.4 Fugitives 26
5.1.5 Marine Vessel and Tank Truck Loading 27
5.1.6 Emergency Generator 28
5.2 Maintenance, Startup, and Shutdown Emissions 28
5.2.1 Heaters 28
5.2.2 MSS Vapor Control 29
5.2.3 Storage Tanks 29
5.2.4 Process Equipment and Piping 32
5.2.5 Air Mover and Vacuum Truck Activities 33
5.2.6 Frac Tanks 34

Section 6 Best Available Control Technology Analysis 38
6.1 Heaters (EPNs: F-101 and F-201) 39
6.1.1 Step 1 – Identification of Potential Control Technologies 39
6.1.2 Step 2 – Elimination of Technically Infeasible Alternatives 40
6.1.3 Step 3 – Ranking of Remaining Technologies Based on Effectiveness 40
6.1.4 Step 4 – Evaluation of Control Technologies in Order of Most Effective to Least Effective 41
6.1.5 Step 5 – Selection of BACT 46
6.2 Flare (EPN: FL-101) 46
6.2.1 Step 1 – Identification of Potential Control Technologies 46
6.2.2 Step 2 – Elimination of Technically Infeasible Alternatives 47
6.2.3 Step 3 – Ranking of Remaining Technologies Based on Effectiveness 47
6.2.4 Step 4 – Evaluation of Control Technologies in Order of Most Effective to Least Effective 48
6.2.5 Step 5 – Selection of BACT 48
6.3 Storage Tanks 48
6.4 Process Fugitives (EPN: FUG) 49
6.4.1 Step 1 – Identification of Potential Control Technologies 49
6.4.2 Step 2 – Elimination of Technically Infeasible Alternatives 49
6.4.3 Step 3 – Ranking of Remaining Technologies Based on Effectiveness 49
6.4.4 Step 4 – Evaluation of Control Technologies in Order of Most Effective to Least Effective 49
6.4.5 Step 5 – Selection of BACT 50

US EPA ARCHIVE DOCUMENT

Table of Contents (Continued)

List of Sections

6.5 Marine Vessel and Tank Truck Loading 50
6.5.1 Step 1 – Identification of Potential Control Technologies 50
6.5.2 Step 2 – Elimination of Technically Infeasible Alternatives 51
6.5.3 Step 3 – Ranking of Remaining Technologies Based on Effectiveness 51
6.5.4 Step 4 – Evaluation of Control Technologies in Order of Most Effective to Least Effective 52
6.5.5 Step 5 – Selection of BACT 52
6.6 Emergency Generator (EPN: EGEN-1) 53
6.6.1 Step 1 – Identification of Potential Control Technologies 53
6.6.2 Step 2 – Elimination of Technically Infeasible Alternatives 53
6.6.3 Step 3 – Ranking of Remaining Technologies Based on Effectiveness 53
6.6.4 Step 4 – Evaluation of Control Technologies in Order of Most Effective to Least Effective 53
6.6.5 Step 5 – Selection of BACT 53
6.7 Maintenance, Startup, and Shutdown Activities (EPN: MSS) 54
6.7.1 Step 1 – Identification of Potential Control Technologies 54
6.7.2 Step 2 – Elimination of Technically Infeasible Alternatives 54
6.7.3 Step 3 – Ranking of Remaining Technologies Based on Effectiveness 55
6.7.4 Step 4 – Evaluation of Control Technologies in Order of Most Effective to Least Effective 55
6.7.5 Step 5 – Selection of BACT 56

Section 7 GHG PSD Applicability 58

Section 8 Additional Impacts Analysis 61

8.1 Visibility, Soils, and Vegetation 61
8.2 Associated Growth 61
8.3 Visibilty Monitoring 62

List of Tables

Table 1-1 GHG PSD Applicability Analysis Summary 3
Table 4-1 Product Stream Summary 19
Table 4-2 Project Construction Schedule 20
Table 1(a) Project Emission Rates 35
Table 6-1 Approximate Cost for Construction and Operation of a Post-Combustion CCS 57
Table 1F Air Quality Permit Application Supplement 59
Table 2F GHG Project Emission Increase 60

List of Figures

Figure 3-1 Area Map 15
Figure 3-2 Galena Park Terminal Plot Plan 16
Figure 3-3 Proposed Condensate Splitter Plot Plan 17
Figure 4-1 Simplified Process Flow Diagram 21
Figure 4-2 Phase I Detailed Process Flow Diagram 22
Figure 4-3 Phase I Detailed Process Flow Diagram 23

US EPA ARCHIVE DOCUMENT

Table of Contents (Continued)

List of Sections

Figure 4-4 Material Stream Technical Data 24

List of Appendices

Appendix A Routine Emission Calculation Details
Appendix B MSS Emission Calculation Details
Appendix C RACT/BACT/LAER Clearinghouse Search Tables
Appendix D TCEQ Permit Application

US EPA ARCHIVE DOCUMENT

Section 1
Introduction

KM Liquids Terminals LLC (KMLT) owns and operates a for-hire bulk petroleum terminal (Galena Park Terminal) located in Galena Park, Harris County, Texas that receives, stores, and transfers petroleum products and specialty chemicals. The facility consists of various storage tanks and associated piping, truck racks, rail car racks, barge docks, ship docks, and control equipment that are currently operated under New Source Review (NSR) Permit No. 2193, Permit-By-Rule (PBR), and Standard Permit.

1.1 Purpose of this Application

KMLT proposes to construct and operate a new 100,000 barrels per day (bbl/day) condensate splitter at the existing KMLT Galena Park Terminal, to be constructed in two 50,000 bbl/day phases. The proposed condensate splitter will consist of two trains which will each process 50,000 bbl/day of hydrocarbon condensate material to obtain products suitable for commercial use. Construction of the second 50,000 bbl/day train will commence within 18 months of completion of the first 50,000 bbl/day train.

A New Source Review (NSR) permit application for the proposed projected was submitted to the Texas Commission on Environmental Quality (TCEQ) in February 2012. Table 1-1 presents a summary of the proposed facility project emissions compared to Greenhouse Gases (GHG) Prevention of Significant Deterioration (PSD) applicability thresholds. The proposed project is subject to Nonattainment New Source Review (NNSR) for volatile organic compounds (VOC) and oxides of nitrogen (NO_x). The proposed project is also subject to PSD review for GHG, for which the TCEQ has not implemented a PSD permitting program. Therefore, this document constitutes an application from KMLT for the required U.S. Environmental Protection Agency (EPA) PSD GHG air quality permit. This application includes both routine and planned maintenance, startup, and shutdown (MSS) emissions.

1.2 Application Organization

This application is organized into the following sections:

Section 1 presents the application objectives and organization;

Section 2 contains TCEQ administrative Form PI-1;

US EPA ARCHIVE DOCUMENT

Section 3 contains an Area Map showing the facility location, a Plot Plan showing the location of the facilities referenced in this submittal, and a Plot Plan for the proposed condensate splitter;

Section 4 contains a process description for the Galena Park Terminal;

Section 5 contains a discussion of the estimated emissions and a completed TCEQ Table 1(a);

Section 6 presents the Best Available Control Technology (BACT) analysis for the facilities included in this application;

Section 7 addresses applicability of the federal GHG PSD permitting requirements;

Section 8 contains an additional impact analysis as required by 40 CFR 52.21(o);

Appendix A contains detailed emissions calculations for routine operations;

Appendix B contains detailed emission calculations for MSS activities;

Appendix C contains the results of the RACT/BACT/LAER Clearinghouse (RBLC) search that supports the heater BACT analysis in Section 6; and

Appendix D contains a copy of the NNSR permit application submitted to the TCEQ in February 2012 (Not included in July 2012 or January 2013 Revisions).

US EPA ARCHIVE DOCUMENT

Table 1-1
Greenhouse Gas PSD Applicability Analysis Summary
KM Liquids Terminals LLC
Galena Park Terminal

EPN	Included in Construction Phase	CO2			CH4			N20			CO2e		
		Baseline	Proposed	Change	Baseline	Proposed	Change	Baseline	Proposed	Change	Baseline	Proposed	Change
		tpy	tpy	tpy	tpy	tpy	tpy	tpy	tpy	tpy	tpy	tpy	tpy
F-101	1	-	116,083	116,083	-	2	2	-	0	0	-	116,196	116,196
F-201	2	-	116,083	116,083	-	2	2	-	0	0	-	116,196	116,196
FL-101	1	-	78	78	-	0	0	-	0	0	-	78	78
FUG	1	-	-	-	-	8	8	-	-	-	-	163	163
VCU-1A, VCU-1B, VCU-2A, VCU-2B, VCU-2C, SD-4-VCU	2	-	3,042	3,042	-	0	0	-	0	0	-	3,052	3,052
EGEN-1	1	-	309	309	-	0	0	-	0	0	-	310	310
MSS	1	-	7,561	7,561	-	0	0	-	0	0	-	7,599	7,599
Project Increase (tpy)				***243,156***			***12***			***0***			***243,594***
Netting Threshold (tons)				***-***			***-***			***-***			***75,000***
Netting Required (Yes/No)				***-***			***-***			***-***			***Yes***
Contemporaneous Period Change (tons)				***-***			***-***			***-***			***> 75,000***
Significant Modification Threshold (tons)				***-***			***-***			***-***			***75,000***
Federal Revew Required (Yes/No)				***-***			***-***			***-***			***Yes***

Notes:

US EPA ARCHIVE DOCUMENT

Section 2
Administrative Forms

This section contains the following TCEQ forms:

- Form PI-1, General Application for Air Preconstruction Permits and Amendments

US EPA ARCHIVE DOCUMENT

Texas Commission on Environmental Quality
Form PI-1 General Application for
Air Preconstruction Permit and Amendment

Important Note: The agency **requires** that a Core Data Form be submitted on all incoming applications unless a Regulated Entity and Customer Reference Number have been issued *and* no core data information has changed. For more information regarding the Core Data Form, call (512) 239-5175 or go to www.tceq.texas.gov/permitting/central_registry/guidance.html.

I. Applicant Information		
A. Company or Other Legal Name: KM Liquids Terminals LLC		
Texas Secretary of State Charter/Registration Number (*if applicable*):		
B. Company Official Contact Name: Ms Christina Harris		
Title: Compliance Assurance Manager		
Mailing Address: 500 Dallas St., Suite 1000		
City: Houston	State: TX	ZIP Code: 77002
Telephone No.: 713-205-1233	Fax No.:	E-mail Address: Christina_Harris@kindermorgan.com
C. Technical Contact Name: Mr. Neal A. Nygaard		
Title: Manager, Houston Environmental		
Company Name: RPS		
Mailing Address: 411 N. Sam Houston Parkway E., Suite 400		
City: Houston	State: TX	ZIP Code: 77060
Telephone No.: 832-239-8018	Fax No.: 281-987-3500	E-mail Address: nygaardn@rpsgroup.com
D. Site Name: Galena Park Terminal		
E. Area Name/Type of Facility: Condensate Splitter		☒ Permanent ☐ Portable
F. Principal Company Product or Business: Bulk Liquids Terminal		
Principal Standard Industrial Classification Code (SIC): 4226		
Principal North American Industry Classification System (NAICS):		
G. Projected Start of Construction Date: 1/1/2013		
Projected Start of Operation Date: 1/1/2014		
H. Facility and Site Location Information (If no street address, provide clear driving directions to the site in writing.):		
Street Address: 906 Clinton Drive		
City/Town: Galena Park	County: Harris	ZIP Code: 77547
Latitude (nearest second): 29°44'08"	Longitude (nearest second): 95°13'07"	

US EPA ARCHIVE DOCUMENT

Texas Commission on Environmental Quality
Form PI-1 General Application for
Air Preconstruction Permit and Amendment

I. Applicant Information (continued)	
I. Account Identification Number (leave blank if new site or facility): HG-0262-H	
J. Core Data Form.	
Is the Core Data Form (Form 10400) attached? If *No*, provide customer reference number and regulated entity number (complete K and L).	☐ YES ☒ NO
K. Customer Reference Number (CN): CN603254707	
L. Regulated Entity Number (RN): RN100237452	
II. General Information	
A. Is confidential information submitted with this application? If *Yes*, mark each **confidential** page **confidential** in large red letters at the bottom of each page.	☐ YES ☒ NO
B. Is this application in response to an investigation or enforcement action? If *Yes*, attach a copy of any correspondence from the agency.	☐ YES ☒ NO
C. Number of New Jobs: 15	
D. Provide the name of the State Senator and State Representative and district numbers for this facility site:	
Senator: Mario Gallegos	District No.: 6
Representative: Ana Hernandez Luna	District No.: 143
III. Type of Permit Action Requested	
A. Mark the appropriate box indicating what type of action is requested. Initial ☒ Amendment ☐ Revision (30 TAC 116.116(e)) ☐ Change of Location ☐ Relocation ☐	
B. Permit Number (if existing):	
C. Permit Type: Mark the appropriate box indicating what type of permit is requested. *(check all that apply, skip for change of location)* Construction ☒ Flexible ☐ Multiple Plant ☐ Nonattainment ☐ Prevention of Significant Deterioration ☒ Hazardous Air Pollutant Major Source ☐ Plant-Wide Applicability Limit ☐ Other:_____	
D. Is a permit renewal application being submitted in conjunction with this amendment in accordance with 30 TAC 116.315(c).	☐ YES ☒ NO

US EPA ARCHIVE DOCUMENT

US EPA ARCHIVE DOCUMENT

Texas Commission on Environmental Quality
Form PI-1 General Application for
Air Preconstruction Permit and Amendment

III. Type of Permit Action Requested (continued)		
E. Is this application for a change of location of previously permitted facilities? If Yes, complete III.E.1 - III.E.4.		☐ YES ☒ NO
1. Current Location of Facility (If no street address, provide clear driving directions to the site in writing.):		
Street Address:		
City:	County:	ZIP Code:
2. Proposed Location of Facility (If no street address, provide clear driving directions to the site in writing.):		
Street Address:		
City:	County:	ZIP Code:
3. Will the proposed facility, site, and plot plan meet all current technical requirements of the permit special conditions? If *No*, attach detailed information.		☐ YES ☐ NO
4. Is the site where the facility is moving considered a major source of criteria pollutants or HAPs?		☐ YES ☐ NO
F. Consolidation into this Permit: List any standard permits, exemptions or permits by rule to be consolidated into this permit including those for planned maintenance, startup, and shutdown.		
List: Not Applicable		
G. Are you permitting planned maintenance, startup, and shutdown emissions? If *Yes*, attach information on any changes to emissions under this application as specified in VII and VIII.		☒ YES ☐ NO
H. Federal Operating Permit Requirements (30 TAC Chapter 122 Applicability)		
Is this facility located at a site required to obtain a federal operating permit? If *Yes*, list all associated permit number(s), attach pages as needed).		☒ YES ☐ NO ☐ To be determined
Associated Permit No (s.): O988		
1. Identify the requirements of 30 TAC Chapter 122 that will be triggered if this application is approved.		
FOP Significant Revision ☒ FOP Minor ☐ Application for an FOP Revision ☐ To Be Determined ☐		
Operational Flexibility/Off-Permit Notification ☐ Streamlined Revision for GOP ☐ None ☐		

III. Type of Permit Action Requested (continued)		
H.	Federal Operating Permit Requirements (30 TAC Chapter 122 Applicability) *(continued)*	
2.	Identify the type(s) of FOP(s) issued and/or FOP application(s) submitted/pending for the site. (check all that apply)	
GOP Issued ☐	GOP application/revision application submitted or under APD review ☐	
SOP Issued ☐	SOP application/revision application submitted or under APD review ☒	
IV. Public Notice Applicability		
A.	Is this a new permit application or a change of location application?	☒ YES ☐ NO
B.	Is this application for a concrete batch plant? If Yes, complete V.C.1 – V.C.2.	☐ YES ☒ NO
C.	Is this an application for a major modification of a PSD, nonattainment, FCAA 112(g) permit, or exceedance of a PAL permit?	☒ YES ☐ NO
D.	Is this application for a PSD or major modification of a PSD located within 100 kilometers of an affected state?	☐ YES ☒ NO
If *Yes*, list the affected state(s).		
E.	Is this a state permit amendment application? If Yes, complete IV.E.1. – IV.E.3.	☐ YES ☒ NO
1.	Is there any change in character of emissions in this application?	☐ YES ☐ NO
2.	Is there a new air contaminant in this application?	☐ YES ☐ NO
3.	Do the facilities handle, load, unload, dry, manufacture, or process grain, seed, legumes, or vegetables fibers (agricultural facilities)?	☐ YES ☐ NO
F.	List the total annual emission increases associated with the application (*list* **all** *that apply and attach additional sheets as needed*):	
Volatile Organic Compounds (VOC): 105.23 tpy		
Sulfur Dioxide (SO_2): 12.54 tpy		
Carbon Monoxide (CO): 79.01 tpy		
Nitrogen Oxides (NO_x): 18.10 tpy		
Particulate Matter (PM): 9.16 tpy		
PM $_{10}$ microns or less (PM_{10}): 9.16 tpy		
PM $_{2.5}$ microns or less ($PM_{2.5}$): 9.16 tpy		
Lead (Pb): NA		
Hazardous Air Pollutants (HAPs): > 5 tpy		
Other speciated air contaminants **not** listed above: CO_2e > 100,000 tpy		

US EPA ARCHIVE DOCUMENT

V. Public Notice Information (complete if applicable)		
A. Public Notice Contact Name: Ms. Christina Harris		
Title: Compliance Assurance Manager		
Mailing Address: 500 Dallas St., Suite 1000		
City: Houston	State: TX	ZIP Code:
B. Name of the Public Place: Galena Park Branch Library		
Physical Address (No P.O. Boxes): 1500 Keene St.		
City: Galena Park	County: Harris	ZIP Code: 77547
The public place has granted authorization to place the application for public viewing and copying.		☒ YES ☐ NO
The public place has internet access available for the public.		☒ YES ☐ NO
C. Concrete Batch Plants, PSD, and Nonattainment Permits		
1. County Judge Information (For Concrete Batch Plants and PSD and/or Nonattainment Permits) for this facility site.		
The Honorable: Edward M. Emmett		
Mailing Address: 1001 Preston, Suite 911		
City: Houston	State: TX	ZIP Code: 77002
2. Is the facility located in a municipality or an extraterritorial jurisdiction of a municipality? *(For Concrete Batch Plants)*		☐ YES ☐ NO NA
Presiding Officers Name(s): NA		
Title: NA		
Mailing Address: NA		
City: NA	State: NA	ZIP Code: NA
3. Provide the name, mailing address of the chief executives of the city and county, Federal Land Manager, or Indian Governing Body for the location where the facility is or will be located.		
Chief Executive: R.P. “Bobby” Barrett, Mayor of Galena Park		
Mailing Address: 2000 Clinton		
City: Galena Park	State: TX	ZIP Code: 77547
Name of the Federal Land Manager: NA		
Title: NA		
Mailing Address: NA		
City: NA	State: NA	ZIP Code: NA

US EPA ARCHIVE DOCUMENT

V. Public Notice Information (complete if applicable) (continued)		
3. Provide the name, mailing address of the chief executives of the city and county, State, Federal Land Manager, or Indian Governing Body for the location where the facility is or will be located. *(continued)*		
Name of the Indian Governing Body: NA		
Title: NA		
Mailing Address: NA		
City: NA	State: NA	ZIP Code: NA
D. Bilingual Notice		
Is a bilingual program **required** by the Texas Education Code in the School District?		☒ YES ☐ NO
Are the children who attend either the elementary school or the middle school closest to your facility eligible to be enrolled in a bilingual program provided by the district?		☒ YES ☐ NO
If *Yes*, list which languages are required by the bilingual program? Spanish		
VI. Small Business Classification (Required)		
A. Does this company (including parent companies and subsidiary companies) have fewer than 100 employees or less than $6 million in annual gross receipts?		☐ YES ☒ NO
B. Is the site a major stationary source for federal air quality permitting?		☒ YES ☐ NO
C. Are the site emissions of any regulated air pollutant greater than or equal to 50 tpy?		☒ YES ☐ NO
D. Are the site emissions of all regulated air pollutants combined less than 75 tpy?		☐ YES ☒ NO
VII. Technical Information		
A. The following information must be submitted with your Form PI-1 (this is just a checklist to make sure you have included everything)		
1. Current Area Map ☒ - See Section 3 of the application.		
2. Plot Plan ☒ - See Section 3 of the application.		
3. Existing Authorizations ☒ - See Section 1 of the application.		
4. Process Flow Diagram ☒ - See Section 4 of the application.		
5. Process Description ☒ - See Section 4 of the application.		
6. Maximum Emissions Data and Calculations ☒ - See Section 5, Appendix A, and Appendix B of the application.		
7. Air Permit Application Tables ☒ - See Appendix D of the application.		
a. Table 1(a) (Form 10153) entitled, Emission Point Summary ☒ - See Section 5 of the application.		
b. Table 2 (Form 10155) entitled, Material Balance ☒ - See Appendix D of the application.		
c. Other equipment, process or control device tables ☒ - Detailed equipment, process, and control device information is included in the emission calculations in Appendix A of the application.		

US EPA ARCHIVE DOCUMENT

US EPA ARCHIVE DOCUMENT

Texas Commission on Environmental Quality
Form PI-1 General Application for
Air Preconstruction Permit and Amendment

VII. Technical Information				
B.	Are any schools located within 3,000 feet of this facility?			☐ YES ☒ NO
C.	Maximum Operating Schedule:			
Hours: 24	Day(s): 7	Week(s): 52	Year(s): 20	
Seasonal Operation? If Yes, please describe in the space provide below.				☐ YES ☒ NO
D.	Have the planned MSS emissions been previously submitted as part of an emissions inventory?			☐ YES ☒ NO
Provide a list of each planned MSS facility or related activity and indicate which years the MSS activities have been included in the emissions inventories. Attach pages as needed.				
E.	Does this application involve any air contaminants for which a *disaster review* is required?			☐ YES ☒ NO
F.	Does this application include a pollutant of concern on the *Air Pollutant Watch List (APWL)*?			☒ YES ☐ NO
VIII.	**State Regulatory Requirements** **Applicants must demonstrate compliance with all applicable state regulations to obtain a permit or amendment**. *The application must contain detailed attachments addressing applicability or non applicability; identify state regulations; show how requirements are met; and include compliance demonstrations.*			
A.	Will the emissions from the proposed facility protect public health and welfare, and comply with all rules and regulations of the TCEQ?			☒ YES ☐ NO
B.	Will emissions of significant air contaminants from the facility be measured?			☒ YES ☐ NO
C.	Is the Best Available Control Technology (BACT) demonstration attached?			☒ YES ☐ NO
D.	Will the proposed facilities achieve the performance represented in the permit application as demonstrated through recordkeeping, monitoring, stack testing, or other applicable methods?			☒ YES ☐ NO
IX.	**Federal Regulatory Requirements** **Applicants must demonstrate compliance with all applicable federal regulations to obtain a permit or amendment** *The application must contain detailed attachments addressing applicability or non applicability; identify federal regulation subparts; show how requirements are met; and include compliance demonstrations.*			
A.	Does Title 40 Code of Federal Regulations Part 60, (40 CFR Part 60) New Source Performance Standard (NSPS) apply to a facility in this application?			☒ YES ☐ NO
B.	Does 40 CFR Part 61, National Emissions Standard for Hazardous Air Pollutants (NESHAP) apply to a facility in this application?			☒ YES ☐ NO
C.	Does 40 CFR Part 63, Maximum Achievable Control Technology (MACT) standard apply to a facility in this application?			☒ YES ☐ NO

IX. Federal Regulatory Requirements **Applicants must demonstrate compliance with all applicable federal regulations to obtain a permit or amendment *The application must contain detailed attachments addressing applicability or non applicability; identify federal regulation subparts; show how requirements are met; and include compliance demonstrations.***	
D. Do nonattainment permitting requirements apply to this application?	☐ YES ☒ NO
E. Do prevention of significant deterioration permitting requirements apply to this application?	☒ YES ☐ NO
F. Do Hazardous Air Pollutant Major Source [FCAA 112(g)] requirements apply to this application?	☐ YES ☒ NO
G. Is a Plant-wide Applicability Limit permit being requested?	☐ YES ☒ NO
X. Professional Engineer (P.E.) Seal	
Is the estimated capital cost of the project greater than $2 million dollars?	☒ YES ☐ NO
If *Yes*, submit the application under the seal of a Texas licensed P.E.	
XI. Permit Fee Information	
Check, Money Order, Transaction Number ,ePay Voucher Number:	Fee Amount: NA
Company name on check: NA	Paid online?: ☐ YES ☐ NO
Is a copy of the check or money order attached to the original submittal of this application?	☐ YES ☐ NO ☒ N/A
Is a Table 30 (Form 10196) entitled, Estimated Capital Cost and Fee Verification, attached?	☐ YES ☐ NO ☒ N/A

US EPA ARCHIVE DOCUMENT

Texas Commission on Environmental Quality
Form PI-1 General Application for
Air Preconstruction Permit and Amendment

XII. Delinquent Fees and Penalties
This form **will not be processed** until all delinquent fees and/or penalties owed to the TCEQ or the Office of the Attorney General on behalf of the TCEQ is paid in accordance with the Delinquent Fee and Penalty Protocol. For more information regarding Delinquent Fees and Penalties, go to the TCEQ Web site at: www.tceq.texas.gov/agency/delin/index.html.
XIII. Signature
The signature below confirms that I have knowledge of the facts included in this application and that these facts are true and correct to the best of my knowledge and belief. I further state that to the best of my knowledge and belief, the project for which application is made will not in any way violate any provision of the Texas Water Code (TWC), Chapter 7, Texas Clean Air Act (TCAA), as amended, or any of the air quality rules and regulations of the Texas Commission on Environmental Quality or any local governmental ordinance or resolution enacted pursuant to the TCAA I further state that I understand my signature indicates that this application meets all applicable nonattainment, prevention of significant deterioration, or major source of hazardous air pollutant permitting requirements. The signature further signifies awareness that intentionally or knowingly making or causing to be made false material statements or representations in the application is a criminal offense subject to criminal penalties.
Name:_____
Signature: _____ *Original Signature Required*
Date: _____

US EPA ARCHIVE DOCUMENT

Section 3
Area Map and Plot Plan

An area map is provided in Figure 3-1 which details the 3,000-foot and one-mile distance markings. An overall plot plan of the Galena Park Terminal is provided in Figure 3-2. A detailed plot plan for the proposed condensate splitter and the associated facilities is provided in Figure 3-3.

US EPA ARCHIVE DOCUMENT

US EPA ARCHIVE DOCUMENT

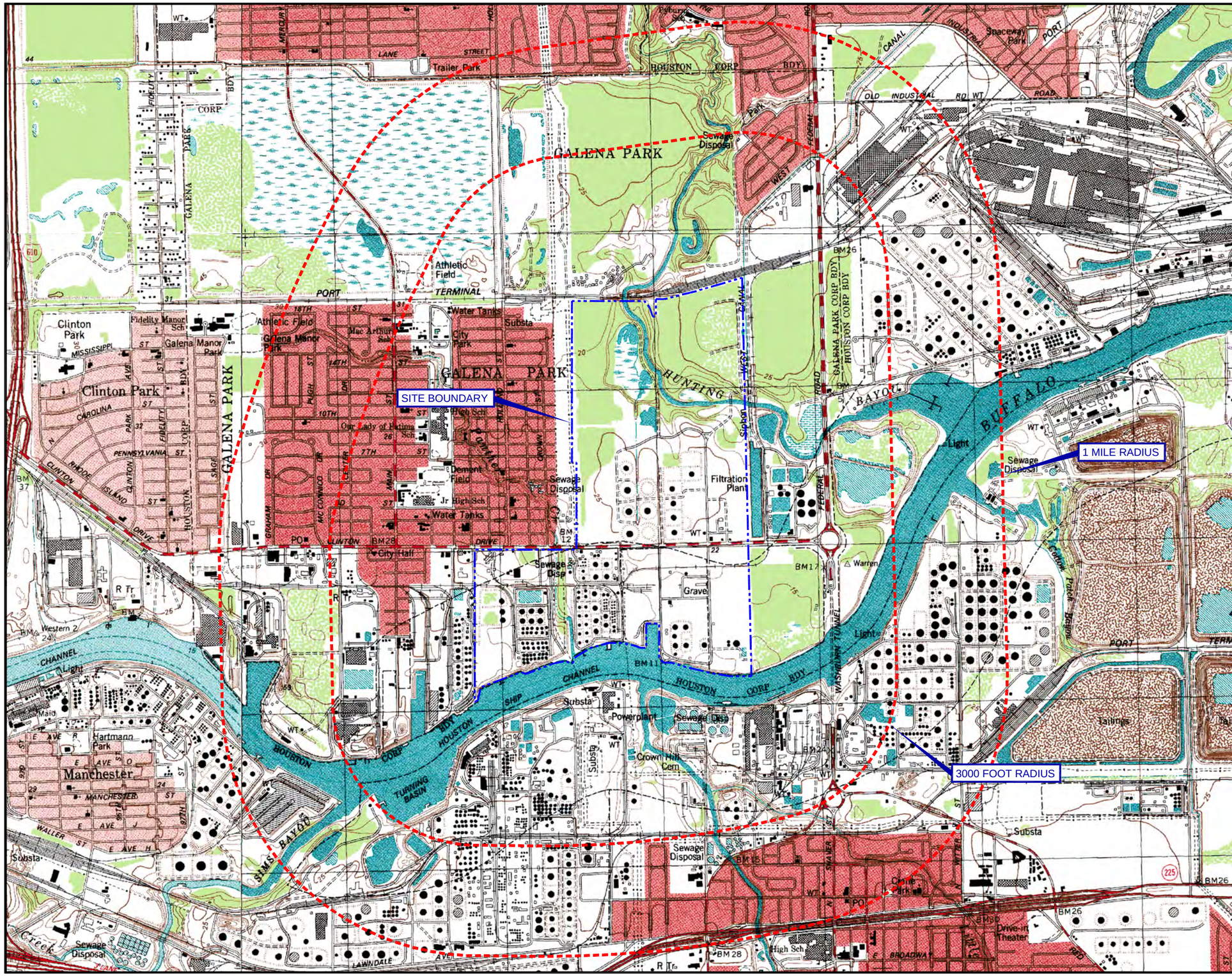

Map Source: USGS 7.5 Min. Quad Sheets
JACINTO CITY, TX., 1982; PARK PLACE, TX., 1982;
PASADENA, TX., 1982; SETTEGAST, TX., 1982.

N

0 2000
SCALE IN FEET

QUADRANGLE LOCATION

KINDER MORGAN
LIQUIDS TERMINALS, L.P.

PROJ. NO.: Kinder Morgan	DATE: 2/23/06	FILE: KinMor-B05

FIGURE 3-1
AREA MAP
GALENA PARK TERMINAL

RPS
14450 JFK Blvd., Suite 400
Houston, TX 77032

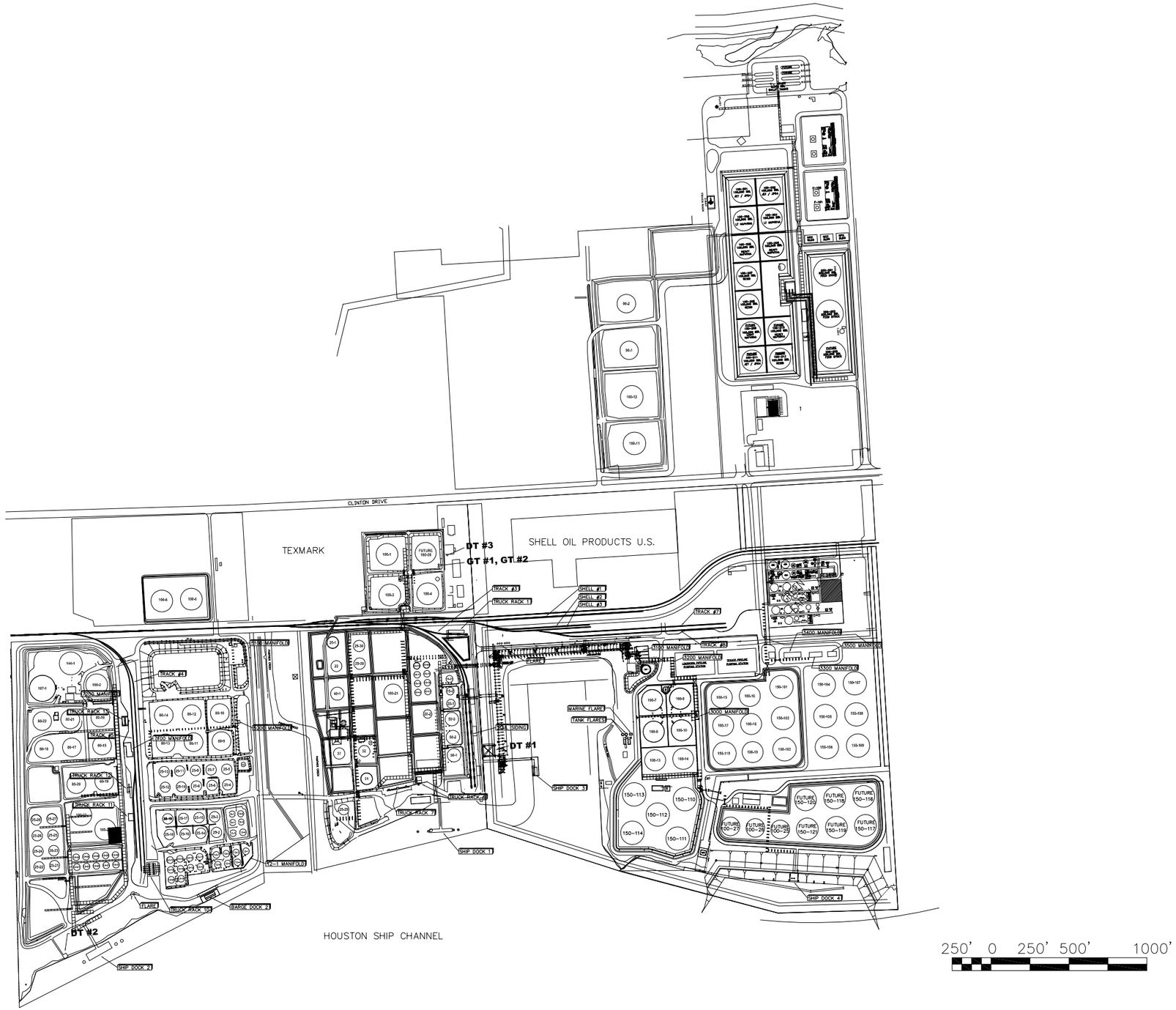

PLOT DATE: Jun 06, 2012-5:47AM

CONTRACTOR BLOCK

NOTES

DRAWING NUMBER	REFERENCE DRAWING

REV. No.	DESCRIPTION	DATE	DRAWN	CHK'D	APP'D
3	GENERAL UPDATES	6-13-08	JLM	JS	JS
2	RELOCATED TANKS 100-13 AND 100-14	4-27-06	SGM		
1	ADDED TANKS 100-13 AND 100-14	10-29-05	SGM		

KINDER MORGAN

DRAWN S. MARTIN

CHECKED

APPROVED PROJ. ENGR.

APPROVED REGIONAL ENGR.

THIS DRAWING IS THE PROPERTY OF KINDER MORGAN LIQUIDS TERMINALS AND MUST BE RETURNED UPON REQUEST. REPRODUCTION HEREOF OR TRANSMISSIONS OF THE INFORMATION HEREON MAY NOT BE MADE WITHOUT WRITTEN CONSENT. ALL PATENT RIGHTS ARE RESERVED.

GALENA PARK TERMINAL

MISCELLANEOUS

PLOT PLAN – GALENA PARK FACILITY

GENERAL ARRANGEMENT

DWG. NO. 88-MS-0060

SCALE 1" = 250' | TERMINAL 88 | DATE 9-16-03

US EPA ARCHIVE DOCUMENT

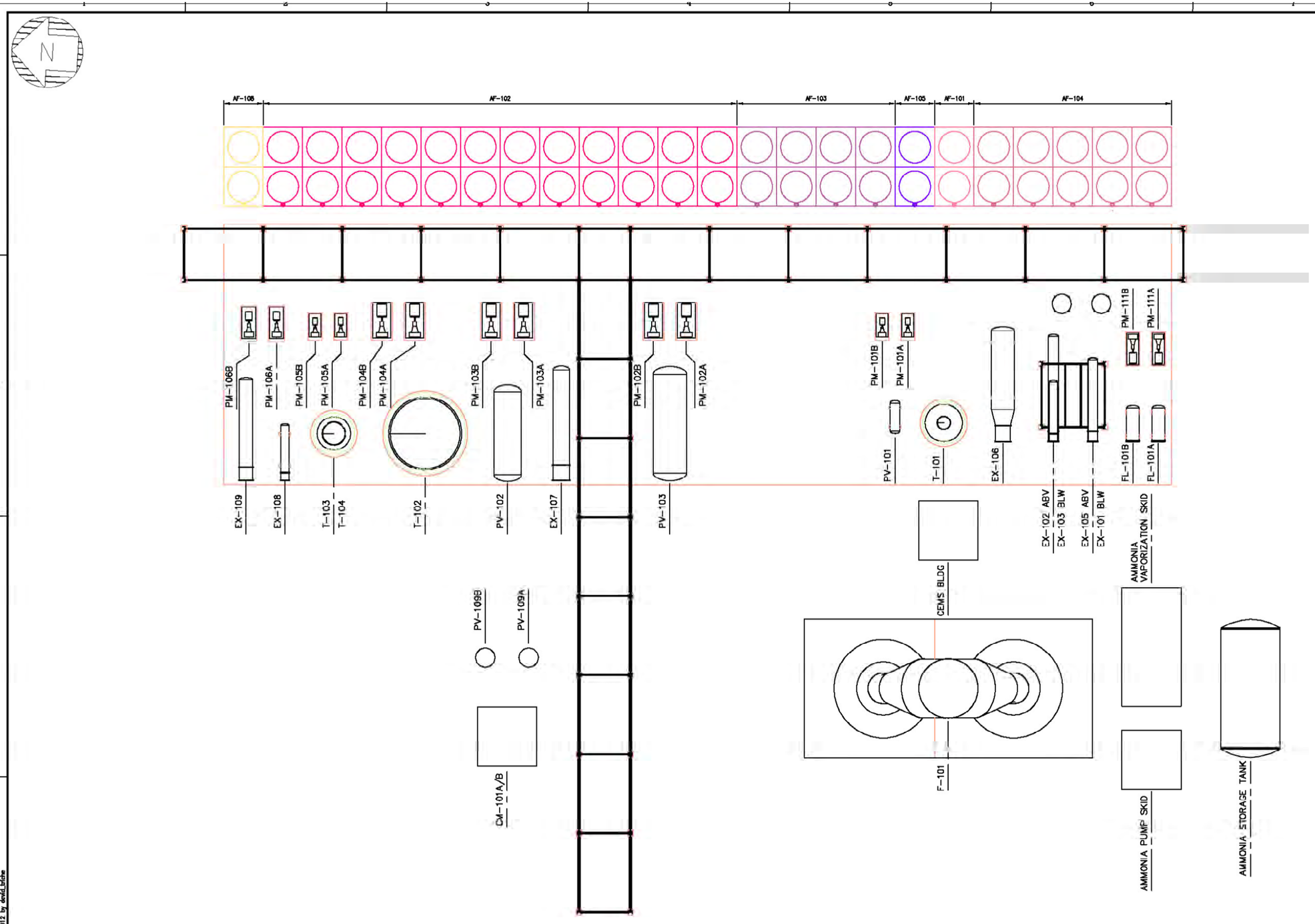

NO.	DATE	DRAWN	CHECKED	DESCRIPTION	APP.

REVISIONS

KINDER MORGAN
SOUTHEAST REGION / SOUTHEAST TERMINALS

DATE: | SCALE: | CHECKED:
DRAWN: | PLOT SCALE: | APPROVED:

50,000 BPD
CONDENSATE FRACTIONATION

GALENA PARK, PASADENA TEXAS

Figure 3-3
Plot Plan

RPS
14450 JFK Blvd. Suite 400
Houston, Tx 77032

136-GA.dwg Plotted on: Jul 24, 2012 by David_Leiche

Section 4
Project and Process Description

The Galena Park Terminal is a for-hire bulk petroleum storage terminal. Petroleum products and specialty chemicals are stored in various storage tanks and transferred in and out of the terminal tankage for external customers via pipeline, tank truck, railcar, and marine vessel. The facility consists of various storage tanks and associated piping, loading, and control equipment. The proposed facility to be installed in the Galena Park terminal at Galena Park, Texas, will process 100,000 bbls/day of a hydrocarbon condensate material to obtain products suitable for commercial use (Phase I and Phase II will each process 50,000 bbls/day). The proposed construction schedule for the facilities included in this application is summarized in Table 4-2 at the end of this section. The process described in the following paragraphs utilizes conventional distillation technology to accomplish this.

The hydrocarbon condensate is fed from storage tanks to the stabilizer column where the lightest fraction of the condensate is distilled from the overhead at a pressure which will typically permit complete condensation of the overhead product. Any uncondensed off-gas that may be produced intermittently (up to 1% of the total fuel usage) will be used for fuel gas in the heaters. Water present in the feed will be distilled in the stabilizer and produced from the overhead receiver water boot. The overhead liquid product from the stabilizer column will be stored in pressurized storage for transfer to the truck loading rack. The feed to this stabilizer column is preheated with waste heat recovered from hot product streams to reduce the amount of fired gas heat input required for distillation. The remaining reboiler heat required to achieve the desired separation is provided by a circulating hot oil circuit. The circulating hot oil is heated in a gas fueled direct fired heater. The bottoms stream from the stabilizer column is pressured through a preheat exchanger that is heated by circulating hot oil into the main fractionation column.

This main fractionation column splits the bottoms from the stabilizer column into four commercially acceptable streams. Three of these streams are taken off as side draws and fed to the top of individual stripping columns. Lighter material is stripped from the product draw in each of these side columns by introducing heat to the bottom of each stripper column with a reboiler exchanger heated by circulating hot oil. The stripped sidedraw vapors are returned to the main fractionation column from the overhead of each stripper column and the stripped sidedraw products are used to preheat the feed to the process before final cooling and transfer to storage.

US EPA ARCHIVE DOCUMENT

In addition to the side draw products, a bottoms product and overhead products are produced from the main fractionation column. These products represent the heaviest fraction and the lightest fractions of the stabilized condensate, respectively. Lighter material is removed from the bottoms product using natural gas for stripping. The overhead condensing system will be operated at the lowest practical pressure to minimize temperatures and improve separation. Both a liquid distillate product and a non-condensable gas stream saturated with heavier components will be produced from the overhead vapor along with column reflux. The off-gas will be compressed and cooled to make it suitable for use as fuel gas and recover as much light naphtha as practical.

In addition to the main process equipment just described there are certain support processes that are required. An elevated flare is provided for use in emergency overpressure situations to dispose of excess process vapors. This flare utilizes a continuous pilot to ensure that unexpected release events result in safe disposal. The pilot is fueled with natural gas. A standby natural gas fired emergency power generator is also provided to maintain critical electrical services during a power outage and minimize emergency flare loads. Also note that existing docks will be utilized to transfer products offsite and a new tank truck rack for the Y-Grade product loading will be constructed for product transfer.

A simplified process flow diagram for the facilities included in this application is included as Figure 4-1. Detailed process flow diagrams for Phase I are included as Figures 4-2 and 4-3. Note that Phase II is a duplicate of Phase I. Also included is Figure 4-4 which provides product stream technical information. The following table provides a summary of the phase, source and disposition for each condensate splitter product.

Table 4-1: Product Stream Summary

Products	Phase	Source	Disposition
Stabilizer Off-Gas	Vapor (intermittent)	Stabilizer Overhead	Fuel Gas
Y-Grade	Liquid	Stabilizer Overhead	Pressurized Storage
Combi Tower Off-Gas	Vapor	Combi Tower Overhead	Fuel Gas
Light Naphtha	Liquid	Combi Tower Overhead	IFR Storage Tank
Heavy Naphtha	Liquid	Combi Tower Side Draw	IFR Storage Tank
Jet Product	Liquid	Combi Tower Side Draw	Fixed Storage Tank
Distillate Product[1]	Liquid	Combi Tower Bottoms	Fixed Storage Tank

US EPA ARCHIVE DOCUMENT

Notes:

1. Distillate product includes, but is not limited to, diesel, kerosene, and atmospheric gas oil.

Table 4-2: Project Construction Schedule

Task Description[1]	Phase I[2]	Phase II[3]
Start Tank Construction	2/2013	8/2013
Start Civil Construction	3/2013	2/2014
Start Mechanical Construction	7/2013	6/2014
Start Commissioning	3/2014	2/2015
Start Up	4/2014	3/2015

Notes:

1. The Civil Phase includes all earthwork, pilings and foundations and underground piping. The Mechanical Phase is the erection of the towers, pipe-racks, cable trays, heat exchangers, hot oil heater, pumps, sphere, truck rack, flare and all the piping, electrical and Instrumentation.

2. Phase I construction consists of emission point numbers (EPNs) F-101, FL-101, VCU-1A, VCU-1B, VCU-2A, VCU-2B, VCU-2C, SD-4-VCU, FUG, EGEN-1, MSS, 200-201, 200-202, 100-202, 100-204, 100-210, 5-201, 100-205, 100-206, 100-207, 100-208, 100-212, 20-4, and 20-5.

3. Phase II construction consists of EPNs F-201, FUG, MSS, 200-203, 100-201, 100-209, 100-203, and 100-211.

US EPA ARCHIVE DOCUMENT

US EPA ARCHIVE DOCUMENT

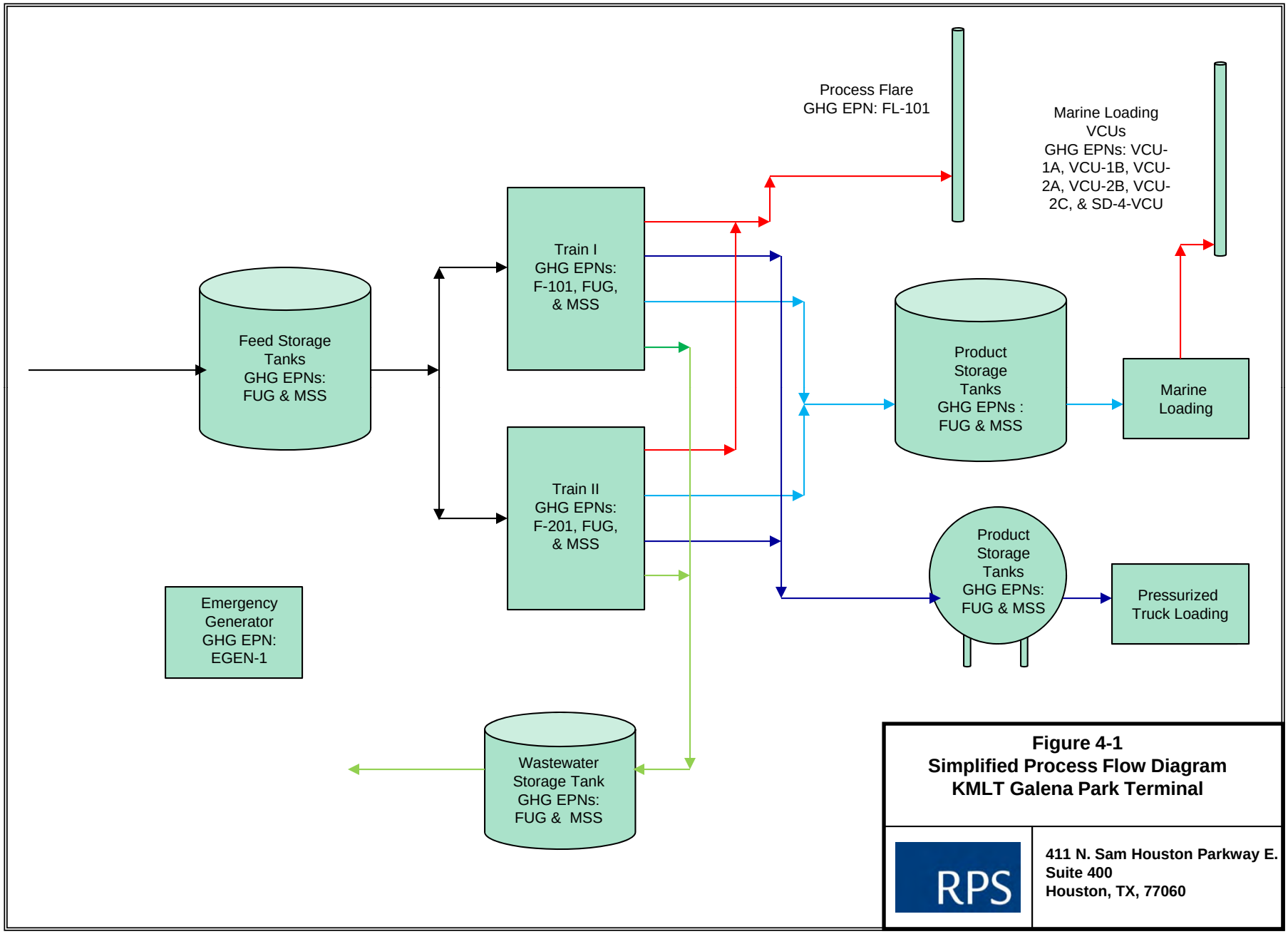

Figure 4-1
Simplified Process Flow Diagram
KMLT Galena Park Terminal

411 N. Sam Houston Parkway E.
Suite 400
Houston, TX, 77060

US EPA ARCHIVE DOCUMENT

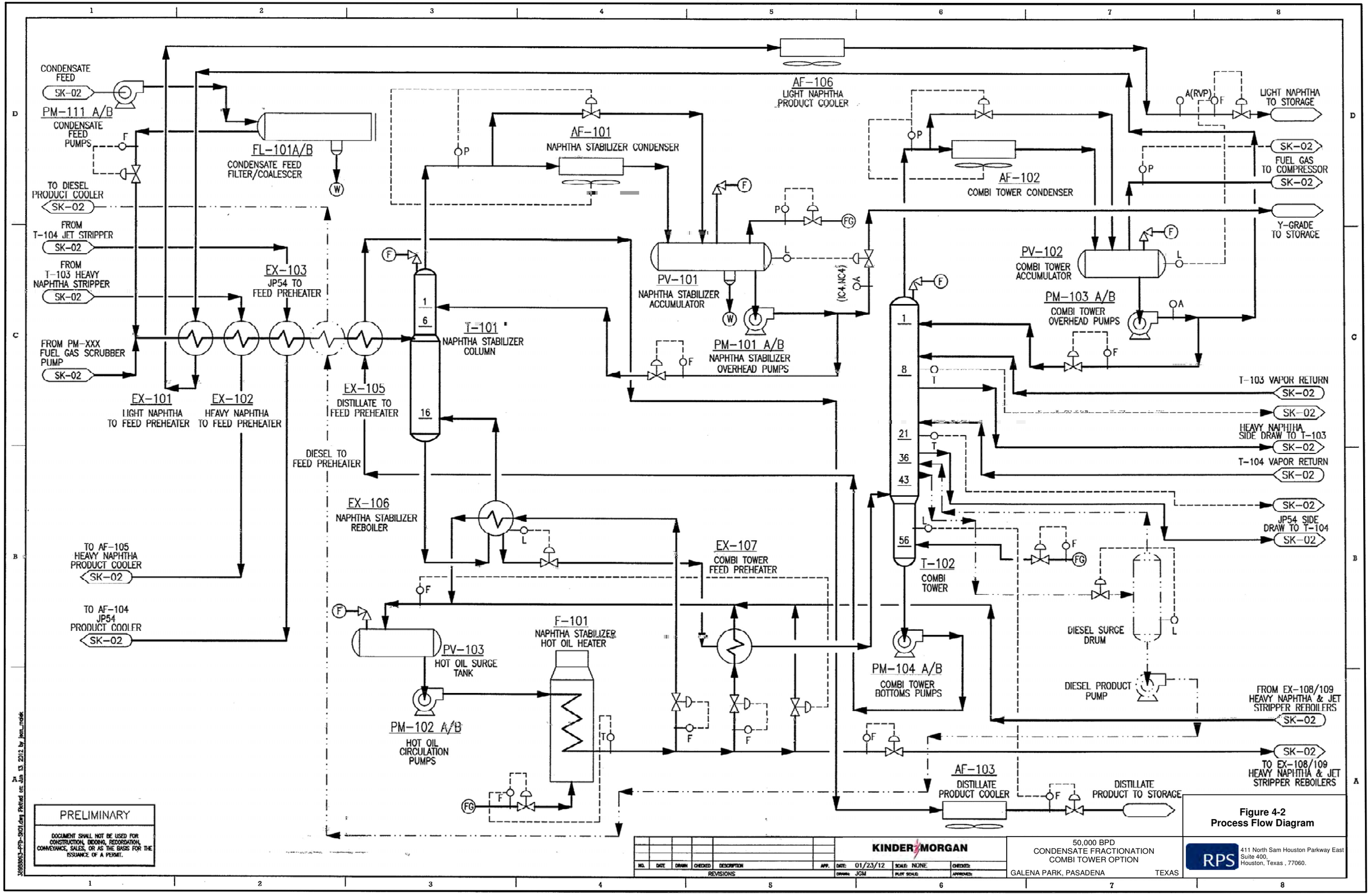

Figure 4-2
Process Flow Diagram

US EPA ARCHIVE DOCUMENT

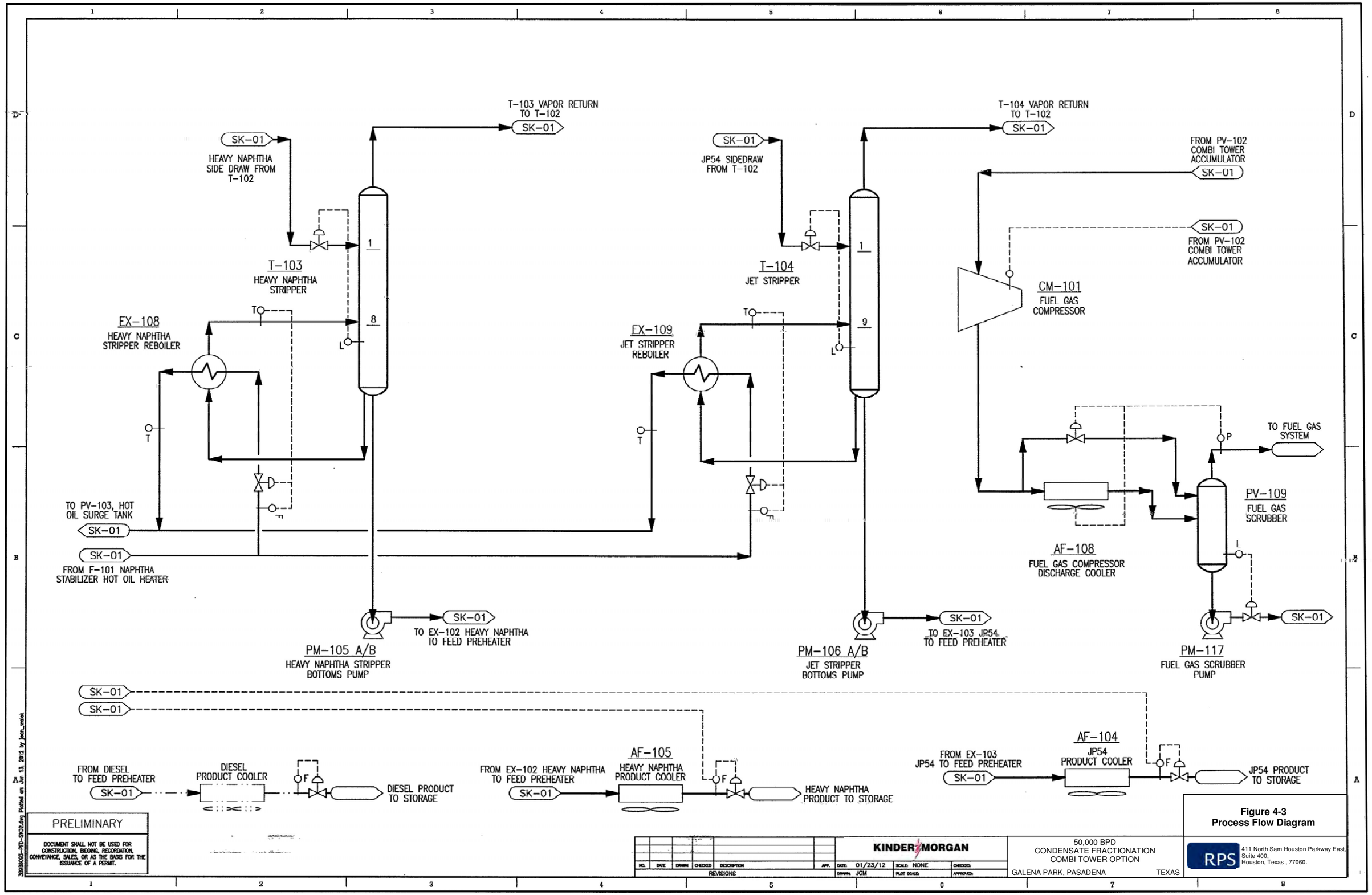

Figure 4-3
Process Flow Diagram

US EPA ARCHIVE DOCUMENT

Material Streams - 48 API Gravity

		Condensate Feed	Stabilizer Feed	Feed to Combi	Stripping Gas	Lean Gas to Fuel	Y-Grade Product	Light Naph Product	Heavy Naph Product	JP54 Product	Diesel Product	Distillate Product
Temperature	°F	75	250	397	75	120	120	120	120	120	120	120
Pressure	psig	203	178	70	30	45	60	110	5	10	2	110
Liquid Mass Density @Std Cond	lb/ft^3	49.1	49.1	49.4			38.5	43.4	47.1	48.7	51.8	53.0
Mass Density	lb/ft^3	48.8	43.7	38.7	0.1	0.3	36.1	41.5	45.3	47.1	50.4	51.7
API Gravity	°API	48.4	48.5	84.3			98.0	71.9	56.0	49.9	38.9	35.1
Molecular Weight		163	162.2	171.2	16.74	32.94	65.56	88.16	104.7	161.8	254	387.7
Viscosity	cP	1.7410	0.4861	0.0000	0.0112	0.0114	0.1623	0.2717	0.3925	0.9129	3.5730	10.7900
Liq Vol Flow @Std Cond	barrel/day	50,000	50,280	48,190			2,208	6,459	2,328	23,660	3,416	12,170
Actual Volume Flow	gpm	1,468	1,647	1,763			69	197	71	714	102	364
Mass Flow	lb/hr	574,200	577,000	557,100	837	2,057	19,880	65,570	25,650	269,500	41,400	151,000
Molar Flow	lbmole/hr	3,523	3,557	3,254	50	62	303	744	245	1,665	163	389
Heat Flow	Btu/hr	-500,800,000	-450,500,000	-381,700,000	-1,623,000	-2,512,000	-20,000,000	-54,890,000	-16,630,000	-227,000,000	-36,680,000	-133,500,000

Material Streams - 55 API Gravity

		Condensate Feed	Stabilizer Feed	Feed to Combi	Stripping Gas	Lean Gas to Fuel	Y-Grade Product	Light Naph Product	Heavy Naph Product	JP54 Product	Diesel Product	Distillate Product
Temperature	°F	75	240	339	75	120	120	120	120	120	120	120
Pressure	psig	203	178	55	30	45	45	110	5	10	2	110
Liquid Mass Density @Std Cond	lb/ft^3	47.6	47.5	48.0		21.4	39.3	43.2	47.4	48.4	51.9	53.3
Mass Density	lb/ft^3	47.2	42.2	39.0	0.1	0.3	37.0	41.3	45.7	46.9	50.4	52.0
API Gravity	°API	54.2	54.3	52.3			93.2	72.9	54.9	51.0	38.8	34.3
Molecular Weight		137.80	137.20	146.30	16.74	34.69	69.07	87.98	123.10	182.90	255.20	405.60
Viscosity	cP	1.0570	0.3592	0.0000	0.0112	0.0112	0.1773	0.2675	0.5139	1.1220	3.6560	12.3700
Liq Vol Flow @Std Cond	barrel/day	50,000	50,340	46,850	0	465	3,604	10,170	12,190	15,420	2,882	5,950
Actual Volume Flow	gpm	1,469	1,654	1,663	0	0	112	311	369	465	86	178
Mass Flow	lb/hr	556,200	559,600	526,400	837	2,322	33,130	102,800	135,000	174,600	34,970	74,150
Molar Flow	lbmole/hr	4,037	4,079	3,599	50	67	480	1,169	1,097	955	137	183
Heat Flow	Btu/hr	-483,600,000	-438,000,000	-376,400,000	-1,623,000	-2,772,000	-32,540,000	-87,550,000	-99,090,000	-155,500,000	-30,980,000	-65,530,000

PRELIMINARY

DOCUMENT SHALL NOT BE USED FOR CONSTRUCTION, BIDDING, RECORDATION, CONVEYANCE, SALES, OR AS THE BASIS FOR THE ISSUANCE OF A PERMIT.

NO.	DATE	DRAWN	CHECKED	DESCRIPTION	APP.
				REVISIONS	

KINDER MORGAN

DATE: 12/5/11 SCALE: NONE CHECKED:
DRAWN: JGM PLOT SCALE: APPROVED:

50,000 BPD
CONDENSATE FRACTIONATION

GALENA PARK, PASADENA TEXAS

Figure 4-4
Material Streams

RPS 411 North Sam Houston Parkway East, Suite 400, Houston, Texas , 77060.

39980093-PFD-S003.dwg Plotted on: Jun 13, 2012 by jens_nolek

Section 5
GHG Emissions Summary

This section contains the completed TCEQ Table 1(a) showing the GHG emissions rates for the facilities included in this application. The GHGs emitted from the proposed facilities include carbon monoxide (CO_2), methane (CH_4), and nitrous oxide (N_2O). KMLT does not anticipate emissions of hydrofluorocarbons (HFCs), perfluorocarbons (PFCs), or sulfur hexafluoride (SF_6) from the proposed facilities. The carbon dioxide equivalent (CO_2e) emission rates are based on the estimated mass emission rates for each applicable GHG multiplied by the global warming potential (GWP) for each specific GHG per 40 CFR Part 98, Subpart A, Table A-1. Detailed individual GHG mass emission calculations as well as the corresponding CO_2e emission rates are presented in Appendix A and B of this application. Both routine and MSS emissions are addressed in this application and the emission calculations for both types are discussed below.

5.1 Routine GHG Emissions

Appendix A provides a summary of the routine GHG emissions included in this application from the following facility types:

- Heaters;
- Flare;
- Storage Tanks;
- Fugitives;
- Marine Vessel and Tank Truck Loading; and
- Emergency Generator.

5.1.1 Heaters

The new condensate splitter plant will utilize two natural gas fired heaters. Note no more than 1% of the total heat input to the heaters will consist of gas produced by the proposed condensate splitter plant. Heater GHG emission calculations are included in Appendix A as Table A-1. GHG emission estimates for routine operations assume an annual average firing rate to determine annual emissions. GHG emission factors for CO_2, CH_4, and N_20 were taken from 40 CFR Part 98, Subpart C, Tables C-1 and C-2.

Although the annual heater GHG cap is based on these emission factors, this low level is not necessarily expected to be achieved by individual combustion units on an annual basis because of typical variations in operating conditions. KMLT only represents that the sum of the GHG emissions from the combustion units will comply with the annual cap based on management of heater operating rates and good combustion practices.

US EPA ARCHIVE DOCUMENT

5.1.2 Flare

The new condensate splitter plant will utilize a process flare which is designed for control of venting during planned MSS and upset situations. The destruction efficiency is 99% for VOC compounds containing no more than 3 carbons that contain no elements other than carbon and hydrogen in addition to the following compounds: methanol, ethanol, propanol, ethylene oxide, and propylene oxide. The destruction efficiency is 98% for other VOC compounds. Flare pilot GHG emission calculations are included in Appendix A as Table A-2. GHG emissions associated with anticipated MSS activities controlled via the process flare are discussed in Section 5.2.2.

Natural gas used as pilot gas contains hydrocarbons, primarily CH_4, that also produce GHG emissions when burned. Any unburned CH_4 from the flare will also be emitted to the atmosphere along with small quantities of N_2O emission resulting from the combustion process. Emissions of these pollutants were calculated based on the equations and emission factors taken from 40 CFR Part 98. These equations and factors were applied to the maximum projected natural gas flow rates to the process flare.

5.1.3 Storage Tanks

The new condensate splitter plant includes ten internal floating roof (IRF) storage tanks, seven fixed roof (FXD) storage tanks, and seven pressurized (PRS) storage tanks. Based on the contents of the proposed tanks, GHG emissions associated with routine working and breathing emissions have been determined to be negligible; therefore, GHG emission estimates for the proposed tanks are not included in this GHG PSD permit application.

5.1.4 Fugitives

The new condensate splitter plant will contain process piping components. Fugitive GHG emission calculations are included in Appendix A as Table A-3. Fugitive emission rates of VOC, including CH_4, from piping components and ancillary equipment were estimated using the methods outlined in the TCEQ's *Air Permit Technical Guidance for Chemical Sources: Equipment Leak Fugitives, October 2000.*

Each fugitive component was classified first by equipment type (i.e., valve, pump, relief valve, etc.) and then by material type (i.e., gas/vapor, light liquid, heavy liquid). An uncontrolled VOC emission rate was obtained by multiplying the number of fugitive components of a particular equipment/material type by an appropriate emission factor. Synthetic Organic Chemical

US EPA ARCHIVE DOCUMENT

Manufacturing Industry (SOCMI) factors (without ethylene) were used to estimate emissions from the proposed components as the streams have an ethylene content of <11%.

To obtain controlled fugitive emission rates, the uncontrolled rates were multiplied by a control factor, which was determined by the type of leak detection and repair (LDAR) program employed. KMLT will implement an enhanced 28LAER LDAR program for fugitive components associated with the proposed condensate splitter plant. The CH_4 emissions were then calculated by multiplying the total controlled emission rate by the weight percent of CH_4 in the process streams. To ensure the GHG emission calculations are conservative in the absence of detailed stream speciation information, the CH_4 concentration was assumed to be 100%. Although this is a highly conservative assumption, fugitive GHG emissions are negligible compared to the GHG emission rates from fuel combustion; therefore, this assumption has no significant impact on the total project GHG emissions.

5.1.5 Marine Vessel and Tank Truck Loading

The new condensate splitter plant will utilize new tank truck and existing marine loading facilities to transfer condensate splitter plant product off-site. GHG emission calculations from these loading operations are included in Appendix A as Tables A-4 through A-5. VOC emissions resulting from loading activities were calculated as described in TCEQ's *Air Permit Technical Guidance for Chemical Sources: Loading Operations (October 2000)* using the following equation from AP-42 "Compilation of Air Pollutant Emission Factors, Volume I, Stationary Point and Area Sources":

$$L = 12.46 * S * P * M/T$$

where:

L = Loading Loss (lb/10^3 gal of liquid loaded)
S = Saturation factor
P = True vapor pressure of liquid loaded (psia)
M = Molecular weight of vapors (lb/lbmole)
T = Temperature of bulk liquid loaded (R)

The VOC loading emission estimates were based on the physical property data of the material loaded and the actual loading method used. The controlled VOC emissions for products with a vapor pressure greater than 0.5 psia utilize a vapor collection system that is routed to a control device with a minimum destruction efficiency of 99%. GHG emissions associated with the combustion of VOC loading emissions were estimated using the methods described in Section 5.1.2. Specifically, GHG emissions were calculated based on the carbon content of the

US EPA ARCHIVE DOCUMENT

controlled VOC streams sent to the flare and of the natural gas used as pilot/assist gas waste with the equations and emission factors taken from 40 CFR Part 98. These equations and factors were applied to the maximum projected VOC and natural gas flow rates to the control device.

Liquids with vapor pressures above atmospheric pressure will be vapor balanced and loaded into pressurized tank trucks with no venting to the atmosphere. The loading of such liquids in pressurized tank trucks is possible because the material in the tank can evaporate or condense as liquid levels change to accommodate liquid level changes without venting.

5.1.6 Emergency Generator

The standby natural gas fired emergency power generator (EPN: EGEN-1) will be utilized to maintain critical electrical services during a power outage and minimize emergency flare loads. The permitted emissions are based only on firing of the engine as required for scheduled testing to insure operability, which will not exceed 500 hours per year. Emissions were calculated from emission factors for natural gas in Tables C-1 and C-2 of Appendix A to 40 CFR Part 98, Subpart C. The calculations are shown in Table A-6.

5.2 Maintenance, Startup, and Shutdown Emissions

This application only addresses the GHG MSS emissions associated with the facilities included in this application. Table B-1 in Appendix B provides a summary of the GHG MSS emissions included in this application. GHG MSS emissions are estimated for the following source types:

- Heaters;
- MSS Vapor Control;
- Storage Tanks;
- Process Equipment and Piping;
- Air Mover and Vacuum Truck; and
- Frac Tanks.

5.2.1 Heaters

The new condensate splitter plant will utilize two natural gas fired heaters. The proposed heaters are expected to operate within the proposed routine GHG emission rates discussed in Section 5.1.1; therefore, additional GHG emissions associated with MSS activities for the proposed heaters are not included in this GHG PSD permit application.

US EPA ARCHIVE DOCUMENT

5.2.2 MSS Vapor Control

The new condensate splitter will utilize the process flare described in Section 5.1.2 and portable vapor control equipment (i.e., vapor combustor units, carbon canisters, engines, etc.) to control VOCs associated with MSS activities. Sections 5.2.3 through 5.2.6 provide emission calculations details for the VOC vapors being sent to combustion devices that result in GHG emissions. MSS combustion GHG emission calculations are included in Appendix B as Tables B-2 and B-7. These GHG MSS emissions are associated with entire process unit turnarounds, storage tanks, process equipment, piping, air movers, vacuum trucks, and frac tanks. The controlled MSS emissions described in Sections 5.2.3, 5.2.4, 5.2.5, and 5.2.6. will be collected via vapor recovery equipment and routed to either the process flare or portable control devices provided by contractors. GHG emission estimates for MSS activities assume an annual total heat input to determine annual emissions. GHG emission factors for CO_2, CH_4, and N_2O were taken from 40 CFR Part 98, Subpart C, Tables C-1 and C-2.

5.2.3 Storage Tanks

As previously discussed in Section 5.2.2, the new condensate splitter plant will utilize the proposed process flare and portable control equipment during storage tank MSS activities. These activities generate VOC emissions which require control and are included in Appendix B as Table B-3. Storage tank floating roof landing VOC emissions were estimated using the methods in Subsection 7.1.3.2.2 Roof Landings of Section 7.1 Organic Liquid Storage Tanks of *Compilation of Air Pollutant Emission Factors: Volume 1 Stationary Point and Area Sources* (AP-42, Fifth Edition, U.S. EPA, November 2006 (hereafter referred to in this application as AP-42).

Landing losses occur from floating roof tanks whenever the tank is drained to a level where its roof lands on its legs or other supports. When a floating roof lands on its supports or legs while the tank is being drained, the floating roof remains at the same height while the product level continues to lower. This creates a vapor space underneath the roof. Liquid remaining in the bottom of the tank provides a continuous source of vapors to replace those expelled by breathing (in the case of internal floating roof tanks) or wind action (in the case of external floating roof tanks). These emissions, referred to as *standing idle losses (L_{SL})*, occur daily as long as the floating roof remains landed.

Additional emissions occur when incoming stock liquid fills a tank with a landed roof. The incoming volume of liquid not only displaces an equivalent volume of vapors from below the

US EPA ARCHIVE DOCUMENT

floating roof, but also generates its own set of product vapors that are displaced during the filling process. These two types of emissions are collectively referred to as *filling losses (L_{FL})*.

For a given roof landing event, total landing loss emissions are therefore the sum of the filling losses and the daily standing idle losses over the entire period that the roof remained landed. Landing losses are inherently episodic in nature and must be determined each time a tank's floating roof is landed.

Tank design considerations will impact both standing idle and filling loss emissions. Therefore, AP-42 separates floating roof tanks into the following three categories for emissions determination purposes:

- Internal floating roof tanks (IFRTs) with a full or partial heel;
- External floating roof tanks (EFRTs) with a full or partial heel; and
- IFRTs and EFRTs that drain dry.

AP-42 presents standing idle and filling loss equations for each different tank category listed above.

For a given tank, standing idle and filling loss equations from AP-42 are used to determine the emissions for each roof landing event. The annual landing loss emissions can then be determined by summing the emissions from each episode that occurs within a given calendar year. Emissions from each roof landing episode can be individually determined using accurate temperature data and stored liquid properties for the time of year when the roof landing event occurred.

Common data to all emission calculations are the physical tank parameters, meteorological data, and the physical properties of the materials being stored. Meteorological data was taken from the EPS's TANKS Version 4.0 emissions estimate software database. The calculation methodology used for the standing loss and refilling emissions is discussed in further detail below.

Similar to breathing losses under normal operating conditions, standing idle losses occur during that period of time a roof is landed with product still in the tank. Emission calculation equations for these losses are from AP-42. The quantity of emissions is dependent upon the number of days idle, tank type (IFR/EFR), type of product stored, and time of year.

For IFR tanks with a liquid heel, standing losses [lbs] are calculated using Equation 2-16 from AP-42:

$$L_{SL} = n_d K_e (PV_v / RT) M_v K_s ,$$

US EPA ARCHIVE DOCUMENT

where,

n_d= number of days standing idle,

K_e= vapor space expansion factor,

P= true vapor pressure of stock liquid [psia],

V_V = volume of vapor space below landed roof [ft^3],

$= \pi(D/2)^2 h_V = \pi(D/2)^2(h_{ld} - h_{le})$

h_V = height of the vapor space under the floating roof [feet],

h_{ld} = height of the landed roof [feet]

h_{le} = effective height of the stock liquid [feet],

R = ideal gas constant [10.731 psia ft^3 / lb-mole-°R],

T = average temperature of vapor and liquid below landed floating roof [°R],

M_V = stock vapor molecular weight [lb/lb-mole], and

K_s= standing idle saturation factor.

The standing losses cannot physically exceed the available stock liquid in the tank. Therefore, an upper limit to the standing losses [lbs] is provided in Equation 2-13 from AP-42:

$$L_{SL\max} \leq 5.9 D^2 h_{le} W_l ,$$

where,

D = tank diameter [feet],

h_{le} = effective height of the stock liquid [feet], and

W_l = stock liquid density [lb/gal].

Maximum annual emissions were based on one landing per tank per year. It was assumed that the tank could stand idle for up to three days; therefore, standing idle emissions were estimated assuming a full liquid heel.

Similar to loading losses, refilling losses occur while a tank is being filled with product during that period of time a roof is landed. Emission calculation equations for these losses are from AP-42. The quantity of emissions is dependent upon the tank type (IFR/EFR), type of product stored, time of year, and fill rate.

The maximum refilling loss is based on: (1) the tank re-fill rate; and (2) the month resulting in the highest emissions as a function of vapor pressure.

The refilling emissions from IFR tanks with a liquid heel and tanks that are drained dry are based on the following calculation from Equation 2-26 from AP-42:

US EPA ARCHIVE DOCUMENT

$$L_{FL} = (PV_v / RT) M_V S \ ,$$

where,

P = true vapor pressure of stock liquid (at T_{LA}) [psia],
V_V = volume of vapor space [ft^3],
R = ideal gas constant [10.731 psia ft^3 / lb-mole-°R],
T = average temperature of vapor and liquid below landed floating roof [°R],
= daily average liquid surface temperature, T_{LA},
M_V = stock vapor molecular weight [lb/lb-mole], and
S = filling saturation factor (0.6 for full heel, 0.5 for partial heel, and 0.15 for drain-dry)

Maximum annual emissions were based on one landing per tank per year.

The roof landing emissions will be collected via vapor recovery equipment and routed to a portable thermal control device. Emissions from the control device were estimated using the methods outlined Section 5.2.2.

When the storage tanks (i.e., IFR, FXD, and PRS) included in this application store liquids with a vapor pressure greater than 0.5 psia and degassing is required, KMLT proposes to control the resulting vapors in a manner consistent with good engineering practice and in accordance with the VOC degassing regulations specified in 30 TAC §115.541-549. GHG emissions resulting from storage tank degassing via combustion device are discussed in detail in Section 5.2.2.

5.2.4 Process Equipment and Piping

As previously discussed in Section 5.2.2, the new condensate splitter plant will utilize the proposed process flare and portable control equipment during process equipment and piping MSS activities. These activities generate VOC emissions which require control and are included in Appendix B as Table B-4. On occasion, process equipment (i.e., vessels, towers, etc.) and/or piping (i.e., pumps, valves, meters, etc.) are degassed in preparation for an MSS and/or inspection activity. There are two components to the GHG emissions associated with process equipment and/or piping MSS activities; controlled depressurizing and degassing and controlled refilling activities.

The first component of the GHG emissions estimate is from the depressurizing and degassing of equipment and/or piping. Emissions from the depressurizing and degassing of equipment and piping were estimated using the Ideal Gas Law. GHG emissions resulting from depressurizing and degassing of equipment and/or piping via combustion device are described in detail in Section 5.2.2.

US EPA ARCHIVE DOCUMENT

The second component of the GHG emissions estimate is from pumping material into equipment and/or piping following the completion of an MSS and/or inspection activity. The emissions from the equipment loading activities are vented to the control devices described in Section 5.2.2. These emissions were estimated as described in TCEQ's *Air Permit Technical Guidance for Chemical Sources, Loading Operations, October 2000* using the following equations:

$$L = 12.46 * S * P * M / T$$

Where:

L = Loading Loss (lb/10^3 gal of liquid loaded)
S = Saturation factor
P = True vapor pressure of liquid loaded (psia)
M = Molecular weight of vapors (lb/lb-mol)
T = Temperature of bulk liquid loaded (R)

5.2.5 Air Mover and Vacuum Truck Activities

As previously discussed in Section 5.2.2, the new condensate splitter plant will utilize the proposed process flare and portable control equipment during MSS activities which require the use of air mover and vacuum trucks. These activities generate VOC emissions which require control and are included in Appendix B as Table B-5. VOC vapors are displaced as a result of an air mover and/or vacuum truck activity to collect and remove materials from tanks, process equipment, piping, frac tanks, and portable tank/containers. Air mover and vacuum truck emissions are calculated based on the loading method and control device in use. KMLT proposes to utilize air movers and vacuum trucks which apply a vacuum during loading operations. These emissions were estimated as described in TCEQ's *Air Permit Technical Guidance for Chemical Sources, Loading Operations, October 2000* using the following equations:

$$L = 12.46 * S * P * M / T$$

Where:

L = Loading Loss (lb/10^3 gal of liquid loaded)
S = Saturation factor
P = True vapor pressure of liquid loaded (psia)
M = Molecular weight of vapors (lb/lb-mol)
T = Temperature of bulk liquid loaded (R)

Annual emissions were determined based on the projected loading throughput. Loading emissions are routed to a control device which may include, but is not limited to, thermal control,

US EPA ARCHIVE DOCUMENT

carbon control, etc. GHG emissions resulting from air mover and vacuum truck activities via combustion device are described in detail in Section 5.2.2.

5.2.6 Frac Tanks

As previously discussed in Section 5.2.2, the new condensate splitter plant will utilize the proposed process flare and portable control equipment during MSS activities which require the use of frac tanks. These activities generate VOC emissions which require control and are included in Appendix B as Table B-6. Residual material is drained and/or pumped from tanks, process equipment, piping, portable tanks, portable containers, etc. into frac tanks as part of facility MSS and/or inspection activities. The frac tank working emissions were estimated as described in TCEQ's *Air Permit Technical Guidance for Chemical Sources, Loading Operations, October 2000* using the following equations:

$$L = 12.46 * S * P * M / T$$

Where:

L = Loading Loss (lb/10^3 gal of liquid loaded)
S = Saturation factor
P = True vapor pressure of liquid loaded (psia)
M = Molecular weight of vapors (lb/lb-mol)
T = Temperature of bulk liquid loaded (R)

The frac tank breathing emissions were estimated using EPA's *TANKS 4.0* Computer Program, which is based on the emission calculation methods in AP-42 Section 7. GHG emissions resulting from frac tanks activities via combustion device are described in detail in Section 5.2.2.

US EPA ARCHIVE DOCUMENT

US EPA ARCHIVE DOCUMENT

TEXAS COMMISSION ON ENVIRONMENTAL QUALITY
Table 1(a) Emission Point Summary

Permit Number:	TBD	RN Number:	RN100237452	Date:	1/8/2013
Company Name:	KM Liquids Terminals LLC				

Review of applications and issuance of permits will be expedited by supplying all necessary information requested on this Table.

AIR CONTAMINANT DATA						EMISSION POINT DISCHARGE PARAMETERS									
1. Emission Point			2. Component or Air Contaminant Name	3. Air Contaminant Emission Rate		4. UTM Coordinates of Emission Point			Source						
									5. Height Above Ground (Feet)	6. Stack Exit Data			7. Fugitives		
										Diameter (Feet) (A)	Velocity (fps) (B)	Temp (^oF) (C)	Length (ft) (A)	Width (ft) (B)	Axis Degrees (C)
EPN (A)	FIN (B)	NAME (C)		Pounds per Hour (A)	TPY (B)	Zone	East (Meters)	North (Meters)							
F-101	F-101	Naphtha Splitter Reboiler Train I	CO_2	NA[1]	-	-	-	-	-	-	-	-	-	-	-
			CH_4	NA[1]	-										
			N_2O	NA[1]	-										
			$CO2_e$	NA[1]	-										
F-201	F-201	Naphtha Splitter Reboiler Train II	CO_2	NA[1]	-	-	-	-	-	-	-	-	-	-	-
			CH_4	NA[1]	-										
			N_2O	NA[1]	-										
			$CO2_e$	NA[1]	-										

US EPA ARCHIVE DOCUMENT

AIR CONTAMINANT DATA						EMISSION POINT DISCHARGE PARAMETERS									
1. Emission Point			2. Component or Air Contaminant Name	3. Air Contaminant Emission Rate		4. UTM Coordinates of Emission Point			Source						
									5. Height	6. Stack Exit Data			7. Fugitives		
EPN (A)	FIN (B)	NAME (C)		Pounds per Hour (A)	TPY (B)	Zone	East (Meters)	North (Meters)	Above Ground (Feet)	Diameter (Feet) (A)	Velocity (fps) (B)	Temp (^{o}F) (C)	Length (ft) (A)	Width (ft) (B)	Axis Degrees (C)
HEAT-CAP	HEAT-CAP	Heater Annual Emissions Cap	CO_2	NA[1]	232,166	-	-	-	-	-	-	-	-	-	-
			CH_4	NA[1]	4										
			N_2O	NA[1]	< 1										
			$CO2_e$	NA[1]	232,392										
FL-101	FL-101	Flare No. 101	CO_2	NA[1]	78	-	-	-	-	-	-	-	-	-	-
			CH_4	NA[1]	< 1										
			N_2O	NA[1]	< 1										
			$CO2_e$	NA[1]	78										

US EPA ARCHIVE DOCUMENT

AIR CONTAMINANT DATA						EMISSION POINT DISCHARGE PARAMETERS									
1. Emission Point			2. Component or Air Contaminant Name	3. Air Contaminant Emission Rate		4. UTM Coordinates of Emission Point			Source						
									5. Height	6. Stack Exit Data			7. Fugitives		
EPN (A)	FIN (B)	NAME (C)		Pounds per Hour (A)	TPY (B)	Zone	East (Meters)	North (Meters)	Above Ground (Feet)	Diameter (Feet) (A)	Velocity (fps) (B)	Temp (^oF) (C)	Length (ft) (A)	Width (ft) (B)	Axis Degrees (C)
FUG	FUG	Process Fugitive Components	CH_4	NA[1]	8										
			$CO2_e$	NA[1]	163	-	-	-	-	-	-	-	-	-	-
VCU-1A, VCU-1B, VCU-2A, VCU-2B, VCU-2C, SD-4-VCU	VCU-1A, VCU-1B, VCU-2A, VCU-2B, VCU-2C, SD-4-VCU	Marine Loading VCU Emissions Cap	CO_2	NA[1]	3,042	-	-	-	-	-	-	-	-	-	-
			CH_4	NA[1]	< 1										
			N_2O	NA[1]	< 1										
			$CO2_e$	NA[1]	3,052										
EGEN-1	EGEN-1	Emergency Generator	CO_2	NA[1]	309	-	-	-	-	-	-	-	-	-	-
			CH_4	NA[1]	< 1										
			N_2O	NA[1]	< 1										
			$CO2_e$	NA[1]	310										
MSS	MSS	MSS Emissions	CO_2	NA[1]	7,282	-	-	-	-	-	-	-	-	-	-
			CH_4	NA[1]	< 1										
			N_2O	NA[1]	< 1										
			$CO2_e$	NA[1]	7,282										

Notes:

1. Short-term (lb/hr) limits are not applicable to GHG emissions.

Section 6
Best Available Control Technology Analysis

PSD regulations require that the best available control technology (BACT) be applied to each new and modified facility that emits an air pollutant for which a significant net emissions increase will occur from the source. The only PSD pollutant addressed in this permit application is GHG. The proposed condensate splitter plant will consist of two trains which will each process 50,000 bbls/day of a hydrocarbon condensate material to obtain products suitable for commercial use. In general, the products (Y-Grade, Light Naphtha, Heavy Naphtha, Kerosene, and Distillate) will be produced by a distillation process. The majority of the GHG emissions associated with the proposed project are the result of the energy required for this distillation process. Specifically, 232,392 tpy CO_2e of the proposed project emissions increase of 243,594 tpy CO_2e (95.4%) are generated from the two heaters associated with the distillation. This BACT analysis will focus primarily on the CO_2 emissions from the proposed heaters.

The U.S. EPA-preferred methodology for a BACT analysis for pollutants and facilities subject to PSD review is described in a 1987 EPA memo (U.S. EPA, Office of Air and Radiation Memorandum from J.C. Potter to the Regional Administrators, December 1, 1987). This methodology is to determine, for the emission source in question, the most stringent control available for a similar or identical source or source category. If it can be shown that this level of control is technically or economically infeasible for the source in question, then the next most stringent level of control is determined and similarly evaluated. This process continues until the BACT level under consideration cannot be eliminated by any substantial or unique technical, environmental, or economic objections. In addition, a control technology must be analyzed only if the applicant opposes that level of control.

In an October 1990 draft guidance document (*New Source Review Workshop Manual (Draft*), October 1990), EPA set out a 5-step process for conducting the referenced top-down BACT review, as follows:

1) Identification of available control technologies;
2) Technically infeasible alternatives are eliminated from consideration;
3) Remaining control technologies are ranked by control effectiveness;
4) Evaluation of control technologies for cost-effectiveness, energy impacts, and environmental effects in order of most effective control option to least effective; and
5) Selection of BACT.

US EPA ARCHIVE DOCUMENT

In its *PSD and Title V Permitting Guidance for Greenhouse Gases* (November 2010), EPA reiterates that this is also the recommended process for permitting of GHG emissions under the PSD program. As such, this BACT analysis follows the top-down approach.

6.1 Heaters (EPNs: F-101 and F-201)

GHG emissions, primarily CO_2, are generated from the combustion of natural gas in the proposed heaters. CO_2e emissions from heaters will be calculated based on metered gas consumption and standard emission factors and/or fuel composition and mass balance.

6.1.1 Step 1 – Identification of Potential Control Technologies

The available technologies for controlling GHG emissions from the proposed heaters include the following:

- ***Fuel Selection:*** Natural gas has the lowest carbon intensity of any available fuel for the proposed heaters. Also, an overhead product stream may be used as a heater fuel source for up for up to 1% of the total heat input; therefore, reducing purchased natural gas usage.

- ***Carbon Capture and Sequestration:*** In EPA's recent GHG BACT guidance, EPA takes the position that, *"for the purpose of a BACT analysis for GHGs, EPA classifies CCS as an add-on pollution control technology that is "available" for large CO_2e emitting facilities including fossil fuel-fired power plants and industrial facilities with high purity CO_2 streams*".

- ***Heater/Process Design***: The heaters will be designed with efficient burners, more efficient heat transfer/recovery efficiency, state-of-the-art refractory and insulation materials in the heater walls, floor, and other surfaces to minimize heat loss and increase overall thermal efficiency.

- ***Good Combustion Practices:*** Good fuel/air mixing in the combustion zone through the use of oxygen monitors and intake air flow monitors to optimize the fuel/air mixture and limit excess air.

- ***Periodic Burner Tune-up:*** The burners are tuned periodically to maintain optimal thermal efficiency.

- ***Product Heat Recovery:*** Hot product streams are cooled with exchange of heat with the colder feed and the distillation column's stripping section to provide process heat in lieu of heat from the furnace.

A RACT/BACT/LAER Clearinghouse (RBLC) search was also conducted in an attempt to identify BACT options that have been implemented or proposed for other similar gas fired combustion facilities. The results of this search are presented in Appendix C. No additional technologies were identified. The control methods identified in the search were limited to burner tune-ups, good design, and good combustion control and operation. Information from *Energy*

US EPA ARCHIVE DOCUMENT

Efficiency Improvement and Cost Saving Opportunities for the Petrochemical Industry: An ENERGY STAR Guide for Energy Plant Managers (Environmental Energy Technologies Division, University of California, sponsored by USEPA, June 2008) was also used in the preparation of this analysis.

6.1.2 Step 2 – Elimination of Technically Infeasible Alternatives

Carbon capture and sequestration (CCS) is not considered to be a viable alternative for controlling GHG emissions from natural gas fired facilities. However, for completeness, this control option is included in the remainder of this analysis, and the reasons that it is not considered viable are discussed in Section 6.1.4.

6.1.3 Step 3 – Ranking of Remaining Technologies Based on Effectiveness

The remaining technologies applicable to the proposed heater design in order of most effective to least effective include:

- Use of low carbon fuels (up to 100% GHG emission reduction for fuels containing no carbon),
- CO_2 capture and storage (up to 90% GHG emission reduction),
- Heater/process design (up to 10% GHG emission reduction),
- Good combustion practices (5 – 25% GHG emission reduction),
- Periodic tune-up (up to 10% for boilers GHG emission reduction, information not found for heaters), and
- Product heat recovery (does not directly improve heater efficiency).

Virtually all GHG emissions from fuel combustion result from the conversion of the carbon in the fuel to CO_2. Fuels used in industrial processes and power generation typically include coal, fuel oil, natural gas, and process fuel gas. Of these, natural gas is typically the lowest carbon fuel that can be burned, with a CO_2 emission factor in lb/MMBtu about 55% of that of sub-bituminous coal. Process fuel gas is a byproduct of a chemical process and typically contains a higher fraction of longer chain carbon compounds than natural gas and thus results in more CO_2 emissions. Table C-2 in 40 CFR Part 98 Subpart C, which contains CO_2 emission factors for a variety of fuels, gives a CO_2 factor of 59 kg/MMBtu for fuel gas compared to 53.02 kg/MMBtu for natural gas. Of over 50 fuels identified in Table C-2, coke oven gas, with a CO_2 factor of 46.85 kg/MMBtu, is the only fuel with a lower CO_2 factor than natural gas, and is not viable fuel for the proposed heaters as the Galena Park Terminal does not contain coke ovens. Although Table C-2 includes a typical CO_2 factor of 59 kg/MMBtu for fuel gas, fuel gas composition is highly dependent on the process from which the gas is produced. Some processes produce significant quantities of hydrogen, which produces no CO_2 emissions when burned. Thus, use

US EPA ARCHIVE DOCUMENT

of a completely carbon-free fuel such as 100% hydrogen, has the potential of reducing CO_2 emissions by 100%. Hydrogen fuel, in any concentration, is not a readily available fuel for most industrial facilities and is only a viable low carbon fuel at industrial plants that generate hydrogen internally. Hydrogen is not produced from the processes at the Galena Park Terminal, and is therefore not a viable fuel. Natural gas is the lowest carbon fuel available for use in the proposed heaters.

Carbon capture and storage would be capable of achieving 90% reduction of produced CO_2 emissions and thus would be considered to be the most effective control method. Good heater/process design, good combustion practices, and periodic tune-ups are all considered effective and have a range of efficiency improvements which cannot be directly quantified; therefore, the above ranking is approximate only. The estimated efficiencies were obtained from *Energy Efficiency Improvement and Cost Saving Opportunities for the Petrochemical Industry: An ENERGY STAR Guide for Energy Plant Managers* (Environmental Energy Technologies Division, University of California, sponsored by USEPA, June 2008). This report addressed improvements to existing energy systems as well as new equipment; thus, the higher end of the range of stated efficiency improvements that can be realized is assumed to apply to the existing (older) facilities, with the lower end of the range being more applicable to new heater designs. Product heat recovery involves the use of heat exchangers to transfer the excess heat that may be contained in product streams to feed streams. Pre-heating of feed streams in this manner reduces the heat requirement of the downstream process unit (i.e., a distillation column) which reduces the heat required from process heaters. Where the product streams require cooling, this practice also reduces the energy required to cool the product stream.

6.1.4 Step 4 – Evaluation of Control Technologies in Order of Most Effective to Least Effective

Use of Low Carbon (Natural Gas) Fuel: Natural gas is the lowest carbon fuel available for use in the proposed heaters. Natural gas is readily available at the Galena Park Terminal and is currently considered a very cost effective fuel alternative. Natural gas is also a very clean burning fuel with respect to criteria pollutants and thus has minimal environmental impact compared to other fuels. Natural gas is the fuel of choice for most industrial facilities, especially natural gas processing facilities, in addition to being the lowest carbon fuel available. Although use of natural gas as fuel results in about 28% less CO_2 emissions than diesel fuel and 45% less CO_2 emissions than sub-bituminous coal; KMLT believes it is appropriate to consider natural gas as the “baseline” fuel for this BACT analysis. Also note that the use of produced

US EPA ARCHIVE DOCUMENT

off-gas as supplemental fuel gas will minimize the use of purchased natural gas and lower the overall site carbon footprint.

There are no negative environmental, economic, or energy impacts associated with this control technology.

Carbon Capture and Sequestration: As stated in Section 6.1.2, carbon capture and sequestration (CCS) is not considered to be a viable alternative for controlling GHG emissions from natural gas fired facilities. This conclusion is supported by the BACT example for a natural gas fired boiler in Appendix F of EPA's *PSD and Title V Permitting Guidance for Greenhouse Gases* (November 2010). In the EPA example, CCS is not even identified as an available control option for natural gas fired facilities. Also, on pages 33 and 44 of the Guidance Document, EPA states:

"For the purposes of a BACT analysis for GHGs, EPA classifies CCS as an add-on pollution control technology that is available for large CO_2-emitting facilities including fossil fuel-fired power plants and industrial facilities with high-purity CO_2 streams (e.g., hydrogen production, ammonia production, natural gas processing, ethanol production, ethylene oxide production, cement production, and iron and steel manufacturing). For these types of facilities, CCS should be listed in Step 1 of a top-down BACT analysis for GHGs." The CO_2 streams included in this permit application are similar in nature to the gas-fired industrial boiler in the EPA Guidance Appendix F example and are dilute streams, and thus are not among the facility types for which the EPA guidance states CCS should be listed in Step 1. Although the proposed facility is not one of the listed facility types for which CCS should be considered, KMLT fully evaluated CCS for the project to ensure that the BACT analysis is complete.

A project implementing CCS was in the permitting stage at the time of this application submittal. This project is the Indiana Gasification Project, and it differs from KMLT's project in several significant ways. The Indian Gasification Project will gasify coal, producing significantly more CO_2 than the KMLT project, with the primary product being substitute natural gas (SNG), which is primarily methane. When coal is gasified, the product is a mixture consisting primarily of CO, CO_2, and H_2. Then, in the SNG process, a series of reactions converts the CO and H_2 to methane. To meet pipeline specifications, the CO_2 must be removed from the SNG, which produces a relatively pure CO_2 stream that is naturally ready for sequestration. Combustion of natural gas, as is proposed by KMLT, produces an exhaust stream that is roughly 10% CO_2, which is far from pure. Thus, while the Indiana Gasification Project will naturally produce a CO_2 byproduct that is amenable to sequestration or use in enhanced oil recovery without further processing, combustion of natural gas in a heater does not. Separation (purification) of the CO_2 from the heater combustion exhaust streams would require additional costly steps not otherwise necessary to the process. In fact, the SNG that will be

US EPA ARCHIVE DOCUMENT

produced by the Indiana Gasification Project, if built, will be used as fuel by residential and commercial customers, and when burned will release the same amount of CO_2 per btu to the atmosphere as the proposed heaters. Coal has a much higher carbon content than natural gas, and the captured carbon from the Indiana Gasification Project only represents the delta between natural gas and coal. Thus, while that project may reduce GHG emissions compared to conventional methods of obtaining energy from coal, it results in no GHG emissions reduction relative to use of natural gas fuel as proposed for the KMLT heaters.

As a final point, the viability of the Indiana Gasification Project is highly dependent on a 30-year contract requiring the State of Indiana to purchase the SNG produced and federal loan guarantees should the plant fail. In contrast, the KMLT project relies on market conditions for viability and is not guaranteed by the government.

Regardless of these differences, for completeness purposes, KMLT has performed an order of magnitude cost analysis for CCS applied to the heaters addressed in this permit application. The results of the analysis, presented in Table 6-1, show that the cost of CCS for the project would be approximately $104 per ton of CO_2 controlled, which is not considered to be cost effective for GHG control. This equates to a total cost of about $21,700,000 per year the two heaters. The best estimate of the total capital cost of the two proposed fractionation units is $145,000,000. Based on a 7% interest rate, and 20 year equipment life, this cost equates to an annualized cost of about $13,700,000. Thus the annualized cost of CCS would be at least 158% of this cost; which far exceeds the threshold that would make CCS economically viable for the project.

There would be additional negative impacts associated with use of CCS for the proposed heaters. The additional process equipment required to separate, cool, and compress the CO_2 would require significant additional power and energy expenditure. This equipment would include amine units, cryogenic units, dehydration units, and compression facilities. The power and energy would be provided from additional combustion units, including heaters, engines, and/or combustion turbines. The additional GHG emissions resulting from additional fuel combustion would either further increase the cost of the CCS system if the emissions were also captured for sequestration or reduce the net amount GHG emission reduction, making CCS even less cost effective than shown in Table 6-1.

Based on both the excessive cost in $/ton of GHG emissions controlled and the inability of the project to bear the high cost and the associated negative environmental and energy impacts, CCS is not a viable control option for the proposed project.

US EPA ARCHIVE DOCUMENT

Heater/Process Design: New heaters will be designed with efficient burners, more efficient heat transfer efficiency, state-of-the-art refractory and insulation materials in the heater walls, floor, and other surfaces to minimize heat loss and increase overall thermal efficiency. Ceramic fiber blankets and Kaolite™ of various thickness and density will be used where feasible on all heater surfaces. Kaolite™ is a super light low thermal conductivity insulation material consisting of vermiculite and Portland cement that reduces heat transfer producing significant savings in furnace fuel consumption.

Hot bottoms from the main distillation column are re-circulated through the stripper columns as a heating media for the column reboilers. It is then circulated through the furnace convection section to recover waste heat from furnace stack effluent. In addition, hot oil is used in a separate furnace to supply heat at a lower temperature to the process to reduce furnace stack gas temperature and, thereby, increase furnace efficiency. Also, an overhead product stream may be used as a heater fuel source for up to 1% of the total heat input; therefore, reducing purchased natural gas usage.

The distillation of multiple products is combined in a single distillation column with side-stream stripper columns to reduce the quantity of reflux required and thereby reduce the distillation heat required. Variable speed electric motors are also being utilized on air coolers to reduce electrical running load. In addition, larger electric drivers for centrifugal pumps are reduced in size by providing multiple parallel pump units that can be shut down when product rates are reduced.

The function and near steady state operation of the proposed heaters allows them to be designed to achieve “near best” thermal efficiency. KMLT proposes actual thermal efficiencies of 85% to be demonstrated on a 12-month rolling average basis for the two proposed heaters. The calculation will be based on fuel temperature, ambient temperature, stack exhaust temperature, and stack O_2 concentration, all of which will be monitored on an hourly basis. The proposed heaters (EPNs: F-101 & F-201) will be continuously monitored for exhaust temperature, fuel temperature, ambient temperature, and excess oxygen. Thermal efficiency for emission units will be calculated for each operating hour from these parameters using equation G-1 from American Petroleum Institute (API) methods 560 (4th ed.) Annex G. There are no negative environmental, economic, or energy impacts associated with this control technology.

Good Combustion Practices: Some amount of excess air is required to ensure complete fuel combustion, minimize emissions, and enhance safety. More excess air than needed to achieve these objectives reduces overall heater efficiency. Good fuel/air mixing in the combustion zone will be achieved through the use of oxygen monitors and intake air flow monitors to optimize the

US EPA ARCHIVE DOCUMENT

fuel/air mixture and limit excess air. Manual or automated air/fuel ratio controls are used to optimize these parameters and maximize the efficiency of the combustion process. Limiting the excess air enhances efficiency and reduces emissions through reduction of the volume of air that needs to be heated in the combustion process. In addition, proper fuel gas supply system design and operation to minimize fluctuations in fuel gas quality, maintaining sufficient residence time to complete combustion, and good burner maintenance and operation are a part of KMLT's good combustion practices.

Good combustion practices will be demonstrated by monitoring the exhaust temperature, fuel temperature, ambient temperature, and excess oxygen. Thermal efficiency will be calculated for each operating hour from these parameters using accepted API methods. An efficiency of 85% will be maintained on a 12-month rolling average basis, excluding malfunction and maintenance periods. There are no negative environmental, economic, or energy impacts associated with this control technology.

Periodic Heater Tune-ups: Periodic tune-ups of the heaters include:

- Preventive maintenance check of fuel gas flow meters annually,
- Preventive maintenance check of oxygen control analyzers quarterly,
- Cleaning of burner tips on an as-needed basis, and
- Cleaning of convection section tubes on an as-needed basis.

These activities ensure maximum thermal efficiency is maintained. Although it is not possible to quantify an efficiency improvement, convection cleaning has shown improvements in the 0.5 to 1.5% range. There are no negative environmental, economic, or energy impacts associated with this control technology.

Product Heat Recovery: Rather than increasing heater efficiency, this technology reduces potential GHG emissions by reducing the required heater duty (fuel firing rate), which can substantially reduce overall plant energy requirements. Excess heat in product streams will be used to pre-heat feed streams throughout the process through the use of heat exchangers to transfer the heat from the product stream to the feed stream. This will also reduce the energy requirement (primarily purchased electricity) needed to cool the product streams. Figures 4-1 and 4-2 in Section 4 of this permit application identify points in the process where this technology will be used. There are no negative environmental, economic, or energy impacts associated with this control technology.

US EPA ARCHIVE DOCUMENT

6.1.5 Step 5 – Selection of BACT

KMLT proposes to incorporate all of the control options identified in Section 6.1.1, except carbon capture and sequestration, as BACT for controlling GHG emissions from the proposed condensate splitter plant heaters. These technologies and additional BACT practices proposed for the heaters are listed below:

- ***Use of Low Carbon (Natural Gas) Fuel:*** Natural gas will be the only purchased fuel fired in the proposed heaters. It is the lowest carbon purchased fuel available for use at the complex.
- ***Heater/Process Design***: Design to maximize heat transfer efficiency and reduce heat loss.
- ***Good Combustion Practices:*** Install, utilize, and maintain an automated air/fuel control system to maximize combustion efficiency on the heaters. KMLT proposes actual thermal efficiencies of 85% to be demonstrated on a 12-month rolling average basis for the two proposed heaters.
- ***Periodic Heater Tune-ups:*** Maintain analyzers and clean heater burner tips and convection tubes as needed
- ***Product Heat Recovery:*** Excess heat in product streams will be used to pre-heat feed streams throughout the process through the use of heat exchangers to transfer the heat from the product stream to the feed stream.

6.2 Flare (EPN: FL-101)

GHG emissions, primarily CO_2, are generated from the combustion of natural gas used to maintain the flare pilots. CO_2e emissions from flaring activities will be calculated based on metered pilot/assist gas consumption, waste gas combustion, and standard emission factors and/or fuel composition and mass balance.

6.2.1 Step 1 – Identification of Potential Control Technologies

The available control technologies for flare operation include:

- ***Use of a thermal oxidizer/VCU in lieu of a flare:*** Alternate control technology consideration.
- ***Use of a vapor recovery unit (VRU) in lieu of a flare:*** Alternate control technology consideration.
- ***Flaring Minimization:*** Minimize the duration and quantity of flaring to the extent possible through good engineering design of the process and good operating practice.
- ***Proper Operation of the Flare:*** Use of flow and composition monitors to accurately determine the optimum amount of natural gas required to maintain adequate VOC destruction in order to minimize natural gas combustion and resulting CO_2 emissions.

US EPA ARCHIVE DOCUMENT

6.2.2 Step 2 – Elimination of Technically Infeasible Alternatives

One of the primary reasons that a flare is considered for control of VOC in the process vent streams is that it can also be used for emergency releases. Although every possible effort is made to prevent such releases, they can occur, and the design must allow for them. A thermal oxidizer/VCU is not capable of handling the sudden large volumes of vapor that could occur during an upset release. A thermal oxidizer/VCU would also not result in a significant difference in GHG emissions compared to a flare. The same constraints exist with a VRU. For this reason, even if a thermal oxidizer/VCU or vapor recovery unit was used for control of routine vent streams, a flare would still be necessary to control emergency releases and would require continuous burning of natural gas in the pilots, which would result in additional CO_2, NO_x, and CO emissions.

For these reasons, the use of either a thermal oxidizer/VCU or VRU is rejected as technically infeasible for the proposed project. Both flaring minimization and proper operation of the flare are technically feasible.

6.2.3 Step 3 – Ranking of Remaining Technologies Based on Effectiveness

The remaining technologies applicable to the proposed design in order of most effective to least effective include:

- Flaring minimization (up to 100% GHG emission reduction depending on activity type), and
- Proper operation of the flare (not directly quantifiable).

Virtually all GHG emissions from fuel combustion result from the conversion of the carbon in the fuel and/or waste gas to CO_2. The proposed condensate splitter plant will be designed to minimize the volume of the waste gas sent to the flare. During routine operation, gas flow to the flare will be limited to pilot and purge gas only. To the extent possible, flaring will be limited to purge/pilot gas, emission events, and MSS activities.

Proper operation of the flare results in a range of efficiency improvements which cannot be directly quantified; therefore, the above ranking is approximate only. Use of an analyzer(s) to determine the heating value of the flare gas to allow continuous determination of the amount of natural gas needed to maintain a minimum heating value of 300 Btu/scf to ensure proper destruction of VOCs ensures that excess natural gas is not unnecessarily flared.

US EPA ARCHIVE DOCUMENT

6.2.4 Step 4 – Evaluation of Control Technologies in Order of Most Effective to Least Effective

Flaring Minimization: The proposed process condensate splitter plant will be designed to minimize the volume of the waste gas sent to the flare. Note that during routine operation, gas flow to the flare will be limited to pilot and purge gas only. Process/waste gases from the proposed condensate splitter plant will be recycled back to the heaters as heat input (i.e., up to 1%) thus reducing the amount of nature gas heat input. There are no negative environmental, economic, or energy impacts associated with this control technology.

Proper Operation of the Flare: Use of an analyzer(s) to determine the heating value of the flare gas to allow continuous determination of the amount of natural gas needed to maintain a minimum heating value of 300 Btu/scf to ensure proper destruction of VOCs ensures that excess natural gas is not unnecessarily flared. Note that the destruction efficiency is 99% for VOC compounds containing no more than 3 carbons that contain no elements other than carbon and hydrogen in addition to the following compounds: methanol, ethanol, propanol, ethylene oxide, and propylene oxide. The destruction efficiency is 98% for other VOC compounds. The added advantage of reducing fuel costs makes this control option cost effective as both a criteria pollutant and GHG emission control option. There are no negative environmental, economic, or energy impacts associated with this control technology.

6.2.5 Step 5 – Selection of BACT

KMLT proposes to incorporate all of the control options identified in Section 6.2.1, except for utilizing a thermal oxidizer, VCU, or VRU in lieu of the flare, as BACT for controlling GHG emissions from flaring. These technologies are listed below:

- ***Flaring Minimization***: Minimize the duration and quantity of flaring to the extent possible through good engineering design of the process and good operating practice.
- ***Proper Operation of the Flare***: Use of flow and composition monitors to accurately determine the optimum amount of natural gas required to maintain a VOC destruction of at least 98% in order to minimize natural gas combustion and resulting CO_2 emissions.

6.3 Storage Tanks

The new condensate splitter plant includes ten internal floating roof (IRF), seven fixed roof (FXD), and seven pressurized (PRS) storage tanks. Based on the contents of the proposed tanks, routine working and breathing GHG emissions have been determined to be negligible; therefore, a GHG BACT analysis for the proposed tanks are not included in this GHG PSD

US EPA ARCHIVE DOCUMENT

permit application. Note that a VOC Lowest Achievable Emission Rate (LAER) technology review was conducted as part of the pending TCEQ Non-Attainment New Source Review (NNSR) permit application submitted on March 29, 2012. As part of the LAER review included in Section 6 of the TCEQ permit application, storage tank design options (i.e., IFR, EFR, submerged fill, drain dry, etc.) were evaluated and incorporated into the KMLT design to reduce VOC emissions, which effectively reduce GHG emissions. Storage tank GHG emissions associated with MSS activities are addressed in Section 6.6 of this application.

6.4 Process Fugitives (EPN: FUG)

Hydrocarbon emissions from leaking piping components (process fugitives) associated with the proposed project include methane, a GHG. The additional methane emissions from process fugitives have been conservatively estimated to be 162.92 tpy as CO_2e. This is a negligible contribution to the total GHG emissions; however, for completeness, they are addressed in this BACT analysis.

6.4.1 Step 1 – Identification of Potential Control Technologies

The only identified control technology for process fugitive emissions of CO_2e is use of a leak detection and repair (LDAR) program. LDAR programs vary in stringency as needed for control of VOC emissions; however, due to the negligible amount of GHG emissions from fugitives, LDAR programs would not be considered for control of GHG emissions alone. As such, evaluating the relative effectiveness of different LDAR programs is not warranted.

6.4.2 Step 2 – Elimination of Technically Infeasible Alternatives

LDAR programs are a technically feasible option for controlling process fugitive GHG emissions.

6.4.3 Step 3 – Ranking of Remaining Technologies Based on Effectiveness

As stated in Step 1, this evaluation does not compare the effectiveness of different levels of LDAR programs.

6.4.4 Step 4 – Evaluation of Control Technologies in Order of Most Effective to Least Effective

Although technically feasible, use of an LDAR program to control the negligible amount of GHG emissions that occur as process fugitives is cost prohibitive. However, implementation of an LDAR program for VOC control purposes will also result in effective control of the small amount of GHG emissions from the same piping components. Pursuant to the representations in the

US EPA ARCHIVE DOCUMENT

NNSR permit application that KMLT has submitted to the TCEQ for this project, KMLT will implement TCEQ's 28LAER LDAR program to minimize process fugitive VOC emissions at the proposed condensate splitter plant, and this program has also been proposed for the additional fugitive VOC emissions associated with the project. 28LAER is TCEQ's most stringent LDAR program, developed to satisfy LAER control requirements in ozone non-attainment areas. There are no negative environmental, economic, or energy impacts associated with implementing TCEQ's 28LAER LDAR program.

6.4.5 Step 5 – Selection of BACT

Due to the negligible amount of GHG emissions from process fugitives, the only available control, implementation of an LDAR program, is not cost effective, and BACT is determined to be no control. However, KMLT will implement TCEQ's 28LAER LDAR program for VOC BACT purposes, which will also effectively minimize GHG emissions. Therefore, the proposed VOC LDAR program more than satisfies GHG BACT requirements.

6.5 Marine Vessel and Tank Truck Loading

GHG emissions, primarily CO_2, are generated from the combustion of VOC vapors associated with the loading of products from the proposed condensate splitter plant and assist natural gas used to maintain the required minimum combustion chamber temperature to achieve adequate destruction. CO_2e emissions from loading activities will be calculated based on metered pilot/assist gas consumption, waste gas combustion, and standard emission factors and/or fuel composition and mass balance.

6.5.1 Step 1 – Identification of Potential Control Technologies

The only viable control option for reducing GHG emissions associated with loading vapor control is minimizing the quantity of combusted VOC vapors and natural gas to the extent possible. The available control technologies for marine vessel and tank truck loading emissions are:

- ***Use of a flare in lieu of a thermal oxidizer/VCU:*** Alternate control technology consideration.
- ***Use of a VRU in lieu of a VCU:*** Alternate control technology consideration.
- ***Minimization***: Minimize the duration and quantity of combustion to the extent possible through good engineering design of the process and good operating practice.
- ***Proper operation of the VCU:*** Use of flow and composition monitors to accurately determine the optimum amount of natural gas required to maintain adequate VOC destruction in order to minimize natural gas combustion and resulting CO_2 emissions.

US EPA ARCHIVE DOCUMENT

6.5.2 Step 2 – Elimination of Technically Infeasible Alternatives

The primary reason that a VCU is considered for control of VOC loading emissions is due to the LAER technology review associated with the pending TCEQ NNSR permit application for non-GHG emissions. VCUs typically achieve higher DREs (i.e., 99%) than flares (i.e., 98%); therefore, VCUs are often utilized to control loading emissions as constituting LAER. Accordingly, in the TCEQ application KMLT has proposed a VCU as LAER for VOC control.

Also note that use of a flare would not result in a significant difference in GHG emissions compared to a thermal oxidizer/VCU. In addition, vapor recovery units are not technically feasible for this project because they would not be capable of handling the large volumes of vapor associated with marine loading activities.

For these reasons, the use of either a flare or vapor recovery unit are rejected as technically infeasible for the proposed project. Both minimization and proper operation of the VCU are technically feasible.

6.5.3 Step 3 – Ranking of Remaining Technologies Based on Effectiveness

The remaining technologies applicable to the proposed design in order of most effective to least effective include:

- Minimization (up to 80% GHG emission reduction associated with submerged loading of ships), and
- Proper operation of the VCU (not directly quantifiable).

Virtually all GHG emissions from fuel combustion result from the conversion of the carbon in the fuel and/or waste gas to CO_2. The proposed process condensate splitter tank truck and marine loading facilities will be designed to minimize the volume of the waste gas sent to the VCU. Specifically, the utilization of submerged loading technology equates to a reduction of up to 80% of vapor space concentration during ship loading activities.

Proper operation of the VCU results in a range of efficiency improvements which cannot be directly quantified; therefore, the above ranking is approximate only. Use of an analyzer(s) to determine the VCU combustion chamber temperature allows for the continuous determination of the amount of natural gas needed to maintain the combustion chamber above 1,400^{o}F. Maintaining the combustion chamber above 1,400^{o}F maintains proper destruction of VOCs and ensures that excess natural gas is not unnecessarily combusted.

US EPA ARCHIVE DOCUMENT

6.5.4 Step 4 – Evaluation of Control Technologies in Order of Most Effective to Least Effective

Minimization: The proposed process condensate splitter tank truck and marine loading facilities will be designed to minimize the volume of the waste gas sent to the VCU. Specifically, submerged and/or pressurized loading reduces the volume of waste gas generated during the loading process which in turn reduces GHG emissions associated with loading VOC vapor control. There are no negative environmental, economic, or energy impacts associated with this control technology.

Proper Operation of the VCU: Use of an analyzer(s) to determine the VCU combustion chamber temperature allows for the continuous determination of the amount of natural gas needed to maintain the combustion chamber above 1,400^{o}F prior to the stack test performed in accordance with NSR Permit No. 101199. Following the completion of the above referenced stack test, the fifteen minute average temperature shall be maintained above the minimum one hour average temperature maintained during the stack test. Maintaining the VCU combustion chamber at the proper temperature for the destruction of VOCs ensures that excess natural gas is not unnecessarily combusted. This added advantage of reducing fuel costs makes this control option cost effective as both a criteria pollutant and GHG emission control option. There are no negative environmental, economic, or energy impacts associated with this control technology.

6.5.5 Step 5 – Selection of BACT

KMLT proposes to incorporate all of the control options identified in Section 6.5.1, except for utilizing a thermal oxidizer, flare, or VRU in lieu of the VCU, as BACT for controlling GHG emissions from loading. These technologies are listed below:

- ***Minimization***: Minimize the duration and quantity of combustion to the extent possible through good engineering design of the process and good operating practice.
- ***Proper operation of the VCU:*** Use of flow and composition monitors to accurately determine the optimum amount of natural gas required to maintain adequate VOC destruction in order to minimize natural gas combustion and resulting CO_2 emissions.

US EPA ARCHIVE DOCUMENT

6.6 Emergency Generator (EPN: EGEN-1)

The emergency generator will be used for emergency purposes only, and the only non-emergency operation will be for testing purposes.

6.6.1 Step 1 – Identification of Potential Control Technologies

The RBLC database did not include any control technologies for GHG emissions from emergency use engines. The technologies that were considered for the engines included:

- Low carbon fuel,
- Good combustion practice and maintenance, and
- Limited operation.

6.6.2 Step 2 – Elimination of Technically Infeasible Alternatives

Use of low carbon fuel, good combustion practice and maintenance, and limited operation are all applicable and feasible.

6.6.3 Step 3 – Ranking of Remaining Technologies Based on Effectiveness

Use of low carbon fuel, limited operation and good combustion practices and maintenance are all effective in minimizing emissions, but do not lend themselves to ranking by effectiveness.

6.6.4 Step 4 – Evaluation of Control Technologies in Order of Most Effective to Least Effective

Natural gas is the lowest carbon fuel available for use in the proposed emergency generator. Natural gas is readily available at the Galena Park Terminal and is currently considered a very cost effective fuel alternative. Limited operation is directly applicable to the proposed engine since it is to be utilized for emergency use only, resulting in no emissions at most times. Operation for testing purposes is necessary to ensure operability when needed. A properly designed and maintained engine constitutes good operating practice for all maximizing efficiency of all fuel combustion equipment, including emergency engines.

6.6.5 Step 5 – Selection of BACT

KMLT proposes to incorporate all of the control options identified in Section 6.6.1 as BACT for controlling GHG emissions from the emergency generator. These technologies are listed below:

US EPA ARCHIVE DOCUMENT

- ***Use of Low Carbon (Natural Gas) Fuel:*** Natural gas will be the only purchased fuel fired by the emergency generator. It is the lowest carbon purchased fuel available for use at the complex.

- ***Good Combustion Practice and Maintenance:*** KMLT proposes to use a properly designed and maintained engine to minimize emissions

- ***Limited Operation:*** Emergency use only inherently results in low annual emissions and normal operation will be limited to 500 hours per year for scheduled testing only. This minimal use results in an insignificant contribution to the total project GHG emissions making consideration of additional controls unwarranted.

6.7 Maintenance, Startup, and Shutdown Activities (EPN: MSS)

GHG emissions, primarily CO_2, are generated from the combustion of VOC vapors associated with MSS activities (i.e., storage tank roof landings, process equipment maintenance, etc.) for the proposed condensate splitter plant and assist natural gas used to maintain the required minimum heating value or combustion chamber temperature to achieve adequate destruction. CO_2e emissions from MSS activities will be calculated based on metered pilot/assist gas consumption, waste gas combustion, and standard emission factors and/or fuel composition and mass balance.

6.7.1 Step 1 – Identification of Potential Control Technologies

The only viable control option for reducing GHG emissions associated with MSS vapor control is minimizing the quantity of combusted VOC vapors and natural gas to the extent possible. The available control technologies for MSS emissions are:

- ***Use of a VRU in lieu of a flare/VCU:*** VRU systems (i.e., carbon canisters, scrubbers, etc.) do not generate GHG emissions and will be utilized to control MSS emissions associated with vacuum trucks, frac tanks, etc.

- ***Minimization:*** Minimize the duration and quantity of combustion to the extent possible through good engineering design of the storage tanks and process equipment and good operating practice.

- ***Proper operation of the flare/VCU or internal combustion engine (ICE):*** Use of flow and composition monitors to accurately determine the optimum amount of natural gas required to maintain adequate VOC destruction in order to minimize natural gas combustion and resulting CO_2 emissions.

6.7.2 Step 2 – Elimination of Technically Infeasible Alternatives

The use of a VRU, minimization, and proper operation of the flare/VCU are considered technically feasible.

US EPA ARCHIVE DOCUMENT

6.7.3 Step 3 – Ranking of Remaining Technologies Based on Effectiveness

The technologies applicable to MSS activities in order of most effective to least effective include:

- Use of a VRU in lieu of a flare/VCU (up to 100% GHG emission reduction),
- Minimization (not directly quantifiable for MSS activities), and
- Proper operation of the flare/VCU or ICE (not directly quantifiable for MSS activities).

Proper operation of a VRU for MSS VOC emissions control results in a GHG emission reductions up to 100%. Fuel and/or waste gas combustion which results in the conversion of carbon in the fuel and/or waste gas to CO_2 is not applicable to VRU technology.

The proposed process condensate splitter plant will be designed to minimize the volume of the waste gas sent to the flare and/or VCU. These improvements cannot be directly quantified; therefore, the above ranking is approximate only. Waste gas volumes will be reduced by reducing storage tank and process equipment vapor space volumes requiring control during MSS activities (i.e., degassing, etc.).

Proper operation of the flare, VCU, and/or ICE results in a range of efficiency improvements which cannot be directly quantified; therefore, the above ranking is approximate only. Use of an analyzer(s) to maintain the heating value of the flare waste gas above 300 BTU/scf and/or the VCU combustion chamber above 1,400^{o}F for the proper destruction of VOCs ensures that excess natural gas is not unnecessarily flared.

6.7.4 Step 4 – Evaluation of Control Technologies in Order of Most Effective to Least Effective

Use of a VRU. Vacuum trucks, frac tanks, etc. may utilize VRU technology for MSS emissions control. VRU usage is limited to MSS activities where the flow rate and event duration warrant its use. Specifically, a VRU is not capable of handling the sudden large volumes of vapor that could occur during unit turnarounds or storage tank roof landing activities. There are no negative environmental, economic, or energy impacts associated with this control technology.

Minimization: New storage tanks and process equipment are designed such that the vapor space volume requiring control during MSS activities is significantly reduced. The proposed storage tank and process equipment design satisfies the LAER technology review associated with the pending TCEQ NNSR permit application. Specifically, VOC emissions and the subsequent GHG emissions associated with MSS activities are significantly reduced by limiting the duration of MSS activities, reducing vapor space volume requiring control, painting tanks

US EPA ARCHIVE DOCUMENT

white, incorporating “drain dry” sumps into the tank design, draining residual VOC material to closed systems, etc. There are no negative environmental, economic, or energy impacts associated with this control technology.

Proper Operation: Use of an analyzer(s) to determine the amount of natural gas needed to maintain the waste gas stream sent to the flare above 300 BTU/scf and/or the VCU/ICE combustion chamber above 1,400^{o}F prior to the stack test performed in accordance with NSR Permit No. 101199. Following the completion of the above referenced stack test, the fifteen minute average temperature shall be maintained above the minimum one hour average temperature maintained during the stack test for the VCU. Maintaining the flare waste gas stream heat content and VCU/ICE combustion chamber at the proper levels for the destruction of VOCs ensures that excess natural gas is not unnecessarily combusted. This added advantage of reducing fuel costs makes this control option cost effective as both a criteria pollutant and GHG emission control option. There are no negative environmental, economic, or energy impacts associated with this control technology.

6.7.5 Step 5 – Selection of BACT

KMLT proposes to incorporate the remaining control options identified in Section 6.6.1 as BACT for controlling GHG MSS emissions from the proposed condensate splitter plant. These technologies proposed for MSS activities are listed below:

- ***Use of a VRU in lieu of a flare/VCU:*** VRU systems (i.e., carbon canisters, scrubbers, etc.) will be utilized to control MSS emissions associated with vacuum trucks, frac tanks, etc.

- ***Minimization:*** Minimize the duration and quantity of combustion to the extent possible through good engineering design of the storage tanks and process equipment and good operating practice.

- ***Proper operation of the flare/VCU of ICE:*** Use of flow and composition monitors to accurately determine the optimum amount of natural gas required to maintain adequate VOC destruction in order to minimize natural gas combustion and resulting CO_2 emissions.

US EPA ARCHIVE DOCUMENT

US EPA ARCHIVE DOCUMENT

Table 6-1
Approximate Cost for Construction and Operation of a Post-Combustion CCS System

CCS System Component	Cost ($/ton of CO_2 Controlled)[1]	Tons of CO_2 Controlled per Year[2]	Total Annual Cost
CO_2 Capture and Compression Facilities	$103	209,153	$21,542,761
CO_2 Transport Facilities (per 100 km of pipeline)[3]	$0.91	209,153	$19,033
CO_2 Storage Facilities	$0.51	209,153	$106,668
Total CCS System Cost	$104	NA	$21,668,462

Proposed Plant Cost	Total Capital Cost	Capital Recovery Factor[4]	Annualized Capital Cost
Cost of proposed facilities without CCS	$145,000,000	0.0944	$13,686,974

Notes:

1. Costs are from *Report of the Interagency Task Force on Carbon Capture (August, 2010)* . A range of costs was provided for transport and storage facilities; for conservatism, the low ends of these ranges were used in this analysis as they contribute little to the total cost. Reported costs in $/tonne were converted to $/ton.

2. Tons of CO_2 controlled assumes 90% capture of all CO_2 emissions from the two heaters.

3. Pipeline costs are per 100 km of pipeline. It is conservatively assumed that a suitable storage location can be found within 10 km, which reduces the total cost for this component of the CCS system to a negligible amount.

4. Capital recovery factor based on 7% interest rate and 20 year equipment life.

Interest rate	7%
Equipent Life (yrs)	20

Section 7
GHG PSD Applicability

Prevention of Significant Deterioration (PSD) permitting is required for a modification of an existing major source for each attainment pollutant and other regulated pollutants (such as H_2S and H_2SO_4) for which the modification will result in a significant net emissions increase. The GHG emission increases associated with this permit application are summarized and compared to the PSD applicability thresholds in Table 1-1 at the end of Section 1. Included at the end of this section are the applicable Table 1F and Table 2F. Harris County is designated attainment/unclassified for GHG PSD permitting purposes.

The Galena Park Terminal is currently considered a major source with respect to GHG emissions and subject to PSD permitting requirements because the project CO_2e emissions for the proposed condensate splitter plant will be greater than the 100,000 tpy significance level established by the EPA in its PSD Tailoring Rule of June 3, 2010. There are no significant decreases of GHG emissions in the contemporaneous period that could potentially result in the proposed project netting out of GHG PSD review; therefore, detailed GHG contemporaneous netting is not included as part of this application. Therefore, the proposed condensate splitter plant triggers PSD review for GHG emissions.

As a result of a final action published in May 2011, EPA promulgated a Federal Implementation Plan (FIP) to implement the GHG permitting requirements in Texas and EPA assumed the role as the GHG permitting authority for Texas GHG permits. Therefore, GHG emissions associated with the proposed condensate splitter plant are subject to the jurisdiction of the EPA.

US EPA ARCHIVE DOCUMENT

TABLE 1F
AIR QUALITY APPLICATION SUPPLEMENT

Permit No.: **TBD**	Application Submittal Date: **March 22, 2012**
Company: **KM Liquids Terminals LLC**	
RN: **100237452**	Facility Location: **906 Clinton Drive**
City: **Galena Park**	County: **Galveston**
Permit Unit I.D.:	Permit Name:
Permit Activity: New Source ___ Modification **X**	
Project or Process Description: **GHG Permit for Condensate Splitter Facility**	

Complete for all Pollutants with a Project Emission Increase.	POLLUTANTS	
	GHG	
Nonattainment? (yes or no)	**Yes**	
Existing site PTE (tpy)?	**> 100,000**	
Proposed project emission increases (tpy from 2F)[2]	**> 75,000**	
Is the existing site a major source?	**Yes**	
[3]If not, is the project a major source by itself?	**NA**	
Significance Level (tpy)	**75,000**	
If site is major, is project increase significant?	**Yes**	
If netting required, estimated start of construction?	**1-Jan-13**	
Five years prior to start of construction	**1-Jan-08**	contemporaneous
Estimated start of operation	**1-Jan-14**	period
Net contemporaneous change, including proposed project, from Table 3F. (tpy)	**> 75,000**	
FNSR APPLICABLE? (yes or no)	**Yes**	

1 Other PSD pollutants.
2 Sum of proposed emissions minus baseline emissions, increases only. Nonattainment thresholds are found in Table 1 in 30 TAC 116.12(11) and PSD thresholds in 40 CFR § 51.166(b)(23).
3 Nonattainment major source is defined in Table 1 in 30 TAC 116.12(11) by pollutant and county. PSD thresholds are found in 40 CFR § 51.166(b)(1).

The representations made above and on the accompanying tables are true and correct to the best of my knowledge.

Signature Title Date

TCEQ - 10154 (Revised 10/08) Table 1F
These forms are for use by facilities subject to air quality permit requirements and may be revised periodically. (APDG 5912v1)

US EPA ARCHIVE DOCUMENT

US EPA ARCHIVE DOCUMENT

Table 2F - CO_{2e}
Project Emission Increase

ollutant[1]: CO2e	**Permit No.: TBD**
aseline Period: NA	

	Affected or Modified Facilities		Permit No.	Actual Emissions (tons/yr)	A Baseline Emissions (tons/yr)	B Proposed Emissions (tons/yr)	Projected Actual Emissions (tons/yr)	Difference (B-A) (tons/yr)	Correction (tons/yr)	Project Increase (tons/yr)
	FIN	EPN								
1	F-101	F-101	-	-	-	116,196	-	116,196	-	116,196
2	F-201	F-201	-	-	-	116,196	-	116,196	-	116,196
3	FL-101	FL-101	-	-	-	78	-	78	-	78
4	FUG	FUG	-	-	-	163	-	163	-	163
5	VCU-1A, VCU-1B, VCU-2A, VCU-2B, VCU-2C, SD-4-VCU	VCU-1A, VCU-1B, VCU-2A, VCU-2B, VCU-2C, SD-4-VCU	-	-	-	3,052	-	3,052	-	3,052
6	EGEN-1	EGEN-1	-	-	-	310	-	310	-	310
6	MSS	MSS	-	-	-	7,599	-	7,599	-	7,599
7	-	-	-	-	-	-	-	-	-	-
8	-	-	-	-	-	-	-	-	-	-
9	-	-	-	-	-	-	-	-	-	-
10	-	-	-	-	-	-	-	-	-	-
11	-	-	-	-	-	-	-	-	-	-
12	-	-	-	-	-	-	-	-	-	-
13	-	-	-	-	-	-	-	-	-	-
14	-	-	-	-	-	-	-	-	-	-
15	-	-	-	-	-	-	-	-	-	-
16	-	-	-	-	-	-	-	-	-	-
17	-	-	-	-	-	-	-	-	-	-
18	-	-	-	-	-	-	-	-	-	-
19	-	-	-	-	-	-	-	-	-	-
20	-	-	-	-	-	-	-	-	-	-
21	-	-	-	-	-	-	-	-	-	-
22										
									Page Subtotal9:	***243,594***

otes:

Storage tank working and breathing emissions are part of a downstream process so all methane and CO2 emissions are expected to be negligible.

Section 8
Additional Impact Analysis

PSD regulations require an Additional Impacts Analysis for projects that are subject to PSD review. In 40 CFR 52.21(o), it states that:

> (1) The owner or operator shall provide an analysis of the impairment to visibility, soils and vegetation that would occur as a result of the source or modification and general commercial, residential, industrial and other growth associated with the source or modification. The owner or operator need not provide an analysis of the impact on vegetation having no significant commercial or recreational value.
>
> (2) The owner or operator shall provide an analysis of the air quality impact projected for the area as a result of general commercial, residential, industrial and other growth associated with the source or modification.
>
> (3) The Administrator may require monitoring of visibility in any Federal Class I area near the proposed new stationary source for major modification for such purposes and by such means as the Administrator deems necessary and appropriate.

This section of the application addresses these requirements.

8.1 Visibility, Soils, and Vegetation

The proposed project will not result in a significant increase in any air contaminant other than GHGs; therefore, the project is not subject to PSD review for any other pollutant. GHGs themselves are not known to have any direct impact on visibility, soils, and vegetation other than their possible impact associated with global warming, which EPA has ruled does not need to be evaluated for GHG PSD permits. However, emissions of other air pollutants from the project could potentially impact these resources. Because the project increases for all other pollutants are insignificant, it is concluded that their impact on visibility, soils, and vegetation is also insignificant.

8.2 Associated Growth

The proposed project will not significantly affect residential, commercial, or industrial growth in the area. Only 15 new jobs are expected to be created by the proposed project. Even if these jobs were to be filled by individuals relocating to the area, it would result in a negligible impact on the existing infrastructure. Because these impacts will be negligible, the corresponding impact on air quality will also be negligible.

US EPA ARCHIVE DOCUMENT

8.3 Visibility Monitoring

The nearest Federal Class I Area is the Caney Creek Wilderness in Arkansas, which is approximately 600 km from the facility. The proposed particulate emissions are below the PSD major modification threshold and will not have an impact on this area.

US EPA ARCHIVE DOCUMENT

US EPA ARCHIVE DOCUMENT

Appendix A

Routine Emission Calculation Details

US EPA ARCHIVE DOCUMENT

Table A-1
Heater GHG Emissions Summary
KM Liquids Terminals LLC
Galena Park Terminal

I. Greenhouse Gas Emission Factors

Units	CO_2	CH_4	N_2O
kg/MMBtu	53.02	1.00E-03	1.00E-04
Global Warming Potential (GWP)	1	21	310
lb/MMBtu	116.89	2.20E-03	2.20E-04

Overhead Gas Components	Molecular Weight (lb/lb-mole)	48 API Overhead Gas Composition (mol %)	55 API Overhead Gas Composition (mol %)	Number of Carbons
Methane	16.00	68.50%	64.60%	1
Ethane	30.07	2.90%	2.60%	2
Propane	44.09	0.10%	0.10%	3
Butanes	58.12	4.20%	7.50%	4
Pentanes	72.14	15.40%	17.10%	5
C6+'s	84.16	8.90%	8.10%	6
MW (lb/lbmol)	32.92	100.00%	100.00%	

Overhead Gas Carbon Content (kg C/kg fuel):	**0.809**	**0.811**	**kg C/kg fuel**
Overhead Gas HHV (Btu/scf):	**1997.63**	**1997.63**	**BTU/scf**

Notes:
1. Emission factors obtained from 40 CFR 98, Subchapter C, Tables C-1 and C-2 and converted from kg/MMBtu to lb/MMBtu by multiplying by 2.2046 lb/kg.
2. Global warming potentials obtained from 40 CFR 98, Subpart A, Table A-1.

3. Overhead gas CO_2e emission factor calculated using 40 CFR 98, Subpart C, Eq. C-5. Used higher emission factor for 55 API overhead gas for permit limit basis. Note all emission rates are in units of short tons. Eq. C-5 in 40 CFR Part 98 Chapter C yields emissions in metric tons. Metric tons were converted to short tons by multiplying by 1.102311 short tons per metric ton.

II. Greenhouse Gas Emission Calculations

		Firing Rates				Emissions				
Description	EPN	Short-Term Maximum	Annual Average	Natural Gas Firing Rate	Overhead Gas Firing Rate	CO_2 from Overhead Gas Combustion (<99% of total heat input)	CO_2 from Overhead Gas Combustion (<1% of total heat input)	CH_4	N_2O	CO_2e
		MMBtu/hr	MMBtu/hr	MMscf/yr	MMscf/yr	tpy	tpy	tpy	tpy	tpy
Naphtha Stabilizer Hot Oil Heater - Train I	F-101	247	225	1,922.8	9.9	115,193.02	890.13	2.17	0.22	116,196.12
Naphtha Stabilizer Hot Oil Heater - Train II	F-201	247	225	1,922.8	9.9	115,193.02	890.13	2.17	0.22	116,196.12
Emission Totals						***230,386.04***	***1,780.25***	***4.35***	***0.43***	***232,392.24***

Notes:
1. Annual emission rate (tpy) = annual average heat input (MMBtu/hr) x emission factor (lb/MMBtu) x 8,760 hours of operation (hr/yr) x (1 ton / 2,000 lb)
2. CO_2e annual emission rate (tpy) = CO_2 emission rate (tpy) x CO_2 GWP + CH_4 emission rate (tpy) x CH_4 GWP + N_2O emission rate (tpy) x N_2O GWP
3. Overhead gas is utilized as a heater fuel gas stream to insure the recycled stripping gas remains in material balance. The use of overhead gas as a heater fuel gas for process control will be limited to <1% of the total heat input.

Table A-2
Flare Routine Operation GHG Emission Calculations (EPN: FL-101)
KM Liquids Terminals LLC
Galena Park Terminal

I. Pilot Gas GHG Emissions

Natural Gas External Combustion Greenhouse Gas Emission Factors

Units	CO_2	CH_4	N_2O
kg/MMBtu	53.02	1.00E-03	1.00E-04
Global Warming Potential (GWP)	1	21	310
lb/MMBtu	116.89	2.20E-03	2.20E-04

Notes:
1. Emission factors obtained from 40 CFR 98, Subchapter C, Tables C-1 and C-2 and converted from kg/MMBtu to lb/MMBtu by multiplying by 2.2046 lb/kg.
2. Global warming potentials obtained from 40 CFR 98, Subpart A, Table A-1.

Description	EPN	Pilot Gas Flow Rate (scf/hr)	Heat Input (MMBtu/yr)	GHG Emissions			
				CO_2 tpy	CH_4 tpy	N_2O tpy	CO_2e tpy
Pilot Gas Emissions	F-101	150	1340.28	78.33	0.00	0.00	78.41
Emission Totals				***78.33***	***0.00***	***0.00***	***78.41***

Notes:
1. Heat Input (MMBtu/yr) = pilot gas flow rate (scf/hr) x natural gas heat content (1,020 but/scf) x (1 MMBtu / 10^6 Btu) x (8,760 hr/yr)
2. Annual emission rate (tpy) = annual heat input (MMBtu/yr) x emission factor (lb/MMBtu) x (1 ton / 2,000 lbs)
2. CO_2e annual emission rate (tpy) = CO_2 emission rate (tpy) x CO_2 GWP + CH_4 emission rate (tpy) x CH_4 GWP + N_2O emission rate (tpy) x N_2O GWP

II. Routine Flare GHG Emission Totals

Operation Type	Pollutant	Emissions (ton/yr)
Routine Flare Operation Emissions	CO_2	78
	CH_4	0
	N_2O	0
	CO_2e	78

US EPA ARCHIVE DOCUMENT

US EPA ARCHIVE DOCUMENT

Table A-3
Fugitive GHG Emissions (EPN: FUG)
KM Liquids Terminals LLC
Galena Park Terminal

Component Type	Stream Type	Emission Factor SOCMI Without C_2	Number of Components	Control Efficiency	Annual Emissions (tpy)
Valves	Light Liquid	0.0035	990	97%	0.46
	Gas/Vapor	0.0089	990	97%	1.16
	Heavy Liquid	0.0007	990	30%	2.13
Pumps	Light Liquid	0.0386	28	85%	0.70
	Heavy Liquid	0.0161	28	30%	1.36
Flanges	Light Liquid	0.0005	2,970	97%	0.20
	Gas/Vapor	0.0029	2,970	97%	1.13
	Heavy Liquid	0.00007	2,970	30%	0.64
Total Fugitive VOC Emissions					***7.76***
Total Fugitive CO_2e Emissions					***162.92***

Notes:

1. Piping component fugitive emissions conservatively assumed to consist of 100% CH_4 for GHG PSD applicability purposes.
2. CO_2e annual emission rate (tpy) = CH_4 emission rate (tpy) x CH_4 GWP

Table A-4
Marine Loading GHG Emissions (EPNs: VCU-1A, VCU-1B, VCU-2A, VCU-2B, VCU-2C, & SD-4-VCU)
KM Liquids Terminals LLC
Galena Park Terminal

Basis

Emissions calculated based on loading loss factors (Tables 5.2-1, AP-42, Section 5.2).
Saturation factor assumed to be 0.2 (ships), submerged loading.
VP based on maximum expected liquid temperature for the short-term and annual average liquid temperature for the annual basis.

									Vapors Routed to Control	
PRODUCT	**LOAD TYPE**	**Collection Efficiency (%)**	**MW**	**Annual Average VP**	**Annual Loading Loss Factor**		**Throughput (bbl/yr)**		**tpy**	
Light Naphtha	Ship	95%	66	8.42	2.6228	lb/1000 gal	7,256,200	bbl/yr	379.68	tpy
Heavy Naphtha	Ship	95%	66	4.18	3.2552	lb/1000 gal	6,993,400	bbl/yr	454.16	tpy
								Totals:	***833.84***	***tpy***

Notes:

1. Marine loading activities associated with the proposed condensate splitter will utilize any combination of existing docks at the Galena Park Terminal. Specifically, KMLT will manage the simultaneous loading authorized by this permit at any one or combination of docks such that the emission totals comply with the proposed emission limits.

US EPA ARCHIVE DOCUMENT

US EPA ARCHIVE DOCUMENT

Table A-5
Controlled Marine Loading GHG Emissions (EPNs: VCU-1A, VCU-1B, VCU-2A, VCU-2B, VCU-2C, & SD-4-VCU
KM Liquids Terminals LLC
Galena Park Terminal

I. Pilot/Assist Gas GHG Emissions

Natural Gas External Combustion Greenhouse Gas Emission Factors

Units	CO_2	CH_4	N_2O
kg/MMBtu	53.02	1.00E-03	1.00E-04
Global Warming Potential (GWP)	1	21	310
lb/MMBtu	116.89	2.20E-03	2.20E-04

Notes:
1. Emission factors obtained from 40 CFR 98, Subchapter C, Tables C-1 and C-2 and converted from kg/MMBtu to lb/MMBtu by multiplying by 2.2046 lb/kg.
2. Global warming potentials obtained from 40 CFR 98, Subpart A, Table A-1.

Description	EPN	Pilot/Assist Gas Flow Rate (scf/hr)	Heat Input (MMBtu/yr)	Emissions			
				CO_2	CH_4	N_2O	CO_2e
				tpy	tpy	tpy	tpy
Pilot/Assist Gas Emissions	MAR-VCU	480	4288.90	250.66	0.00	0.00	250.91
Emission Totals				***250.66***	***0.00***	***0.00***	***250.91***

Notes:
1. Heat Input (MMBtu/yr) = pilot gas flow rate (scf/hr) x natural gas heat content (1,020 but/scf) x (1 MMBtu / 10^6 Btu) x (8,760 hr/yr)
2. Annual emission rate (tpy) = annual heat input (MMBtu/yr) x emission factor (lb/MMBtu) x (1 ton / 2,000 lb)
3. CO_2e annual emission rate (tpy) = CO_2 emission rate (tpy) x CO_2 GWP + CH_4 emission rate (tpy) x CH_4 GWP + N_2O emission rate (tpy) x N_2O GWP

II. Marine Loading Vapor Control GHG Emissions

Naphtha Combustion Greenhouse Gas Emission Factors

Units	CO_2	CH_4	N_2O
kg/MMBtu	68.02	3.00E-03	6.00E-04
Global Warming Potential (GWP)	1	21	310
lb/MMBtu	149.96	6.61E-03	1.32E-03

Notes:
1. Emission factors obtained from 40 CFR 98, Subchapter C, Tables C-1 and C-2 and converted from kg/MMBtu to lb/MMBtu by multiplying by 2.2046 lb/kg.
2. Global warming potentials obtained from 40 CFR 98, Subpart A, Table A-1.

Description	EPN	Annual		Emissions			
		Vapors lb/yr	Heat Release MMBtu/yr	CO_2	CH_4	N_2O	CO_2e
				tpy	tpy	tpy	tpy
Ship Loading Vapor Control	MAR-VCU	1,667,681.14	37,225.03	2,791.07	0.12	0.02	2,801.29
				2,791.07	***0.12***	***0.02***	***2,801.29***

Notes:
1. Heat Input (MMBtu/yr) = vapor flow rate (lb/yr) x (1 gal / 5.6 lbs) x naphtha heat content (0.125 MMBu/gal)
2. Annual emission rate (tpy) = annual heat input (MMBtu/hr) x emission factor (lb/MMBtu) x (1 ton / 2,000 lb)
3. CO_2e annual emission rate (tpy) = CO_2 emission rate (tpy) x CO_2 GWP + CH_4 emission rate (tpy) x CH_4 GWP + N_2O emission rate (tpy) x N_2O GWP

III. Marine Loading GHG Emission Totals

Operation Type	Pollutant	Emissions (ton/yr)
Ship Loading Vapor Control	CO_2	3,042
	CH_4	0.13
	N_2O	0.03
	CO_2e	3,052

US EPA ARCHIVE DOCUMENT

Table A-6
Emergency Generator Emissions Summary (EPN: EGEN-1)
KM Liquids Terminals LLC
Galena Park Terminal

EPN	FIN	Description	Fuel	Firing Rate (mmbtu/hr)	Usage (hrs/yr)	Firing Rate (mmbtu/yr)	Emission Rates (tpy)[1]			
							CO_2	CH_4	N_2O	CO_2e
EGEN-1	EGEN-1	Emergency Generator	Nat. Gas	10.58	500	5,292	309.3	0.0058	0.0006	309.6

Emission Factors:

Emission factors from Tables C-1 & C-2 of
Appendix A to 40 CFR Part 98 Chapter C

Fuel	kg CO2/mmBtu	kg CH4 /mmBtu	kg N2O/mmBtu
Natural Gas	53.02	0.001	0.0001

kg to lb conversion factor: 2.20462

CO2e Equivalents:

CO2	1.0
CH4	21.0
N2O	310.0

Appendix B

MSS Emission Calculation Details

US EPA ARCHIVE DOCUMENT

US EPA ARCHIVE DOCUMENT

Table B-1
Maintenance, Startup and Shutdown GHG Emissions Summary (EPN: MSS)
KM Liquids Terminals LLC
Galena Park Terminal

MSS Activity Type	Emission Rate			
	CO_2	CH_4	N_2O	CO_2e
	tpy	tpy	tpy	tpy
Process Flare	7,281.83	0.00	0.00	7,282.43
Portable Control	278.78	0.01	0.00	316.53
Totals	***7,560.61***	***0.01***	***0.00***	***7,598.97***

Notes:
1. The MSS emission calculations included in this permit application are for cap calculation purposes only. These emission calculations are not to be considered enforceable representations

Table B-2
Flare MSS GHG Emission Calculations (EPN: FL-101)
KM Liquids Terminals LLC
Galena Park Terminal

I. Pilot Gas GHG Emissions

Natural Gas External Combustion Greenhouse Gas Emission Factors

Units	CO_2	CH_4	N_2O
kg/MMBtu	53.02	1.00E-03	1.00E-04
Global Warming Potential (GWP)	1	21	310
lb/MMBtu	116.89	2.20E-03	2.20E-04

Notes:
1. Emission factors obtained from 40 CFR 98, Subchapter C, Tables C-1 and C-2 and converted from kg/MMBtu to lb/MMBtu by multiplying by 2.2046 lb/kg.
2. Global warming potentials obtained from 40 CFR 98, Subpart A, Table A-1.

Description	EPN	Pilot Gas Flow Rate (scf/hr)	Heat Input (MMBtu/yr)	Emissions			
				CO_2	CH_4	N_2O	CO_2e
				tpy	tpy	tpy	tpy
Pilot Gas Emissions	F-101	150	1340.28	78.33	0.00	0.00	78.41
Emission Totals				***78.33***	***0.00***	***0.00***	***78.41***

Notes:
1. Heat Input (MMBtu/yr) = pilot gas flow rate (scf/hr) x natural gas heat content (1,020 but/scf) x (1 MMBtu / 10^6 Btu) x (8,760 hr/yr)
2. Annual emission rate (tpy) = annual heat input (MMBtu/yr) x emission factor (lb/MMBtu) x (1 ton / 2,000 lb)
3. CO_2e annual emission rate (tpy) = CO_2 emission rate (tpy) x CO_2 GWP + CH_4 emission rate (tpy) x CH_4 GWP + N_2O emission rate (tpy) x N_2O GWP

US EPA ARCHIVE DOCUMENT

US EPA ARCHIVE DOCUMENT

Table B-2
Flare MSS GHG Emission Calculations (EPN: FL-101)
KM Liquids Terminals LLC
Galena Park Terminal

II. MSS GHG Emissions

Waste/Purge/Assist Gas Combustion Greenhouse Gas Emission Factors

Units	CO_2	N_2O
kg/MMBtu	-	6.00E-04
Global Warming Potential (GWP)	1	310
lb/MMBtu	-	1.32E-03

Unit Startup/Shutdown

Maximum Gas Flow:	25,000	scfh
Duration	500	hrs/yr

Waste Stream								GHG Emissions				
	Flow							Controlled GHG Emissions		Converted to CO2	N_2O	CO_2e
Component	MW	Number of Carbon Atoms	Mol%	Vol%	lb/yr	MMscf/yr	mol/yr	Efficiency %	tpy	tpy	tpy	tpy
Nitrogen	28.00	0	0.01%	0.01%	92.35	0.001	3.30	0%	0.00	0.00	0.00	0.00
Hydrogen	2.02	0	0.01%	0.01%	6.66	0.001	3.30	99%	0.00	0.00	0.00	0.00
Methane	16.00	1	0.01%	0.01%	52.77	0.001	3.30	99%	0.00	0.03	0.00	0.03
Ethane	30.07	2	0.01%	0.01%	99.18	0.001	3.30	99%	0.00	0.10	0.00	0.10
Propane	44.09	3	0.01%	0.01%	145.42	0.001	3.30	99%	0.00	0.22	0.00	0.22
Butanes	58.12	4	2.94%	2.94%	56,354.53	0.368	969.66	98%	0.00	110.45	0.00	110.47
Pentanes	72.14	5	37.00%	37.00%	880,385.22	4.625	12,203.17	98%	0.00	2,156.94	0.00	2,157.14
C6+'s	84.16	6	34.61%	34.61%	960,678.63	4.326	11,414.91	98%	0.00	2,824.40	0.00	2,824.58
Hexanes	86.17	6	24.00%	24.00%	682,084.43	3.000	7,915.57	98%	0.00	2,005.33	0.00	2,005.45
Benzene	78.11	6	1.40%	1.40%	36,066.62	0.175	461.74	98%	0.00	106.04	0.00	106.04
Totals			***100.00%***	***100.00%***	***2,615,965.81***	***12.500***	***32,981.53***		***0.00***	***7,203.50***	***0.00***	***7,204.03***

Notes:

1. Controlled GHG emission rate (tpy) = Inlet GHG vapor flow rate (tpy) x (1 - DRE%)
2. Converted to CO_2 emission rate (tpyr) = Inlet vapor flow rate (tpy) x DRE% x Carbon Count (#)
3. N_2O annual emission rate (tpy) = inlet vapor flow rate (scf/yr) x 40 CFR 98, Subpart W process gas HHV (MMBtu/scf) x emission factor (kg/MMBtu) x (2.2046 lb/kg) x (1 ton / 2,000 lbs)
4. CO_2e annual emission rate (tpy) = CO_2 emission rate (tpy) x CO_2 GWP + CH_4 emission rate (tpy) x CH_4 GWP + N_2O emission rate (tpy) x N_2O GWP

III. Flare MSS GHG Emission Totals

Operation Type	Pollutant	Emissions (ton/yr)
Routine Flare Operation Emissions	CO_2	7,282
	CH_4	0
	N_2O	0
	CO_2e	7,282

Table B-3
Controlled IFR Tank Roof Landing GHG MSS Emissions (EPN: MSS)
KM Liquids Terminals LLC
Galena Park Terminal

Constants

Date Roof Landed		07/01/11
Date Drained Dry or Roof Floatec		07/04/11
Number of Days Roof Off-Float	n_d	3.00 (days)
Atmospheric Pressure	Pa	14.70 (psia)
Max Daily Ambient Temperature	T_{MAX}	92.70 (deg F)
Min Daily Ambient Temperature	T_{MIN}	72.40 (deg F)
Daily Total Solar Insulation Factor	I	1887.12 [BTU/(ft2*day)]
Daily Average Ambient Temperature	T_{AA}	542.15 (deg R)

Tank ID	Dia.	High Roof Leg Height	Status Prior to Re-Filling (1)	Height of Liquid Heel	Product Stored (2)	RVP	Molecular Weight	Stock Liquid Density	Slope of ASTM Distillation Curve	Height of Vapor Space	Volume of Vapor Space	Tank Solar Absorptance Factor	Daily Vapor Temp. Range	Liquid Bulk Temp.	Daily Average Liquid Surface Temp.	Antoine's Equation Constant	Antoine's Equation Constant	True Vapor Pressure of Stock Liquid	Vapor Space Expansion Factor	Standing Idle Saturation Factor	Not to Exceed Standing Idle Losses	Calculated Standing Idle Losses	Uncontrolled Standing Idle Losses	Uncontrolled Filling Losses	MSS Roof Landings (3)	Vapors Routed to Control
	D			H_{le}			M_V	W_l	S	h_V	V_V	alpha	delta T	T_B	T_{LA}	A	B	P	K_E	K_s		L_s		L_F		
	(ft)	(ft)		(ft)			(lb/lb-mol)	(lb/gal)		(ft)	(ft^3)		(deg R)	(deg R)	(deg R)			(psia)			(lbs)	(lbs)	(lbs)	(lbs)	(events/year)	(tpy)
200-201	174	5.00	Drain	0.001	Feed Stock	13	66	5.6	3.5	5.00	118,869.80	0.17	23.60	542.17	544.70	11.50	4962.83	10.93	0.62	0.26	8,806.01	838.91	838.91	2,201.50	1	**1.52**
200-202	174	5.00	Drain	0.001	Feed Stock	13	66	5.6	3.5	5.00	118,869.80	0.17	23.60	542.17	544.70	11.50	4962.83	10.93	0.62	0.26	8,806.01	838.91	838.91	2,201.50	1	**1.52**
200-203	174	5.00	Drain	0.001	Feed Stock	13	66	5.6	3.5	5.00	118,869.80	0.17	23.60	542.17	544.70	11.50	4962.83	10.93	0.62	0.26	8,806.01	838.91	838.91	2,201.50	1	**1.52**
100-201	123	5.00	Drain	0.001	Light Naphtha	13	66	5.6	3.5	5.00	59,399.56	0.17	23.60	542.17	544.70	11.50	4962.83	10.93	0.62	0.26	4,400.39	419.21	419.21	1,100.10	1	**0.76**
100-202	123	5.00	Drain	0.001	Light Naphtha	13	66	5.6	3.5	5.00	59,399.56	0.17	23.60	542.17	544.70	11.50	4962.83	10.93	0.62	0.26	4,400.39	419.21	419.21	1,100.10	1	**0.76**
100-209	123	5.00	Drain	0.001	Light Naphtha	13	66	5.6	3.5	5.00	59,399.56	0.17	23.60	542.17	544.70	11.50	4962.83	10.93	0.62	0.26	4,400.39	419.21	419.21	1,100.10	1	**0.76**
100-203	123	5.00	Drain	0.001	Heavy Naphtha	7	66	5.6	2.5	5.00	59,399.56	0.17	23.60	542.17	544.70	12.02	5605.16	5.62	0.18	0.40	2,261.28	419.21	419.21	565.32	1	**0.49**
100-204	123	5.00	Drain	0.001	Heavy Naphtha	7	66	5.6	2.5	5.00	59,399.56	0.17	23.60	542.17	544.70	12.02	5605.16	5.62	0.18	0.40	2,261.28	419.21	419.21	565.32	1	**0.49**
100-210	123	5.00	Drain	0.001	Heavy Naphtha	7	66	5.6	2.5	5.00	59,399.56	0.17	23.60	542.17	544.70	12.02	5605.16	5.62	0.18	0.40	2,261.28	419.21	419.21	565.32	1	**0.49**
5-201	41	5.00	Drain	0.001	Wastewater	13	66	5.6	3.5	5.00	6,599.95	0.17	23.60	542.17	544.70	11.50	4962.83	10.93	0.62	0.26	488.93	46.58	46.58	122.23	1	**0.08**
																								Totals	***10***	***8.40***

Notes
1. Codes for tank status before re-fill: Full Heel (FULL) Partial Heel (PARTIAL) Drain Dry (DRAIN
2. The MSS emission calculations included in this permit application are for cap calculation purposes only. These emission calculations are not to be considered enforceable representations as to the magnitude, duration, and/or frequency of individual activities.

US EPA ARCHIVE DOCUMENT

US EPA ARCHIVE DOCUMENT

Table B-4
Equipment Venting GHG MSS Emissions (EPN: MSS)
KM Liquids Terminals LLC
Galena Park Terminal

Emissions Summary	tpy
Equipment MSS Vapors Vented (See Table 8 for controlled emissions details)	0.31
Equipment Refilling	5.92

Equipment ID		Pump	Filter/Meter/ Valve	Vessels and Piping	Vapors Routed to Control (EPN: MSS)
Annual Venting/Draining/Refilling Events	events/yr	20	20	10	
Short-Term Venting/Draining/Refilling Events	simultaneous events	3	3	1	
Molecular Weight of Vapor	lb/lb-mole	66	66	66	
Daily Avg. Liquid Surface Temp.	°R	544.77	544.77	544.77	
Vapor Pressure at Max. Storage Temp.	psia	11.00	11.00	11.00	
Volume	ft^3/event	85.00	85.00	15,550.88	
Equipment MSS Vapors Vented (See Table B-8 for controlled emission details)					
Vented to Control	Yes/No	Yes	Yes	Yes	
Moles	M_v/event	0.160	0.160	29.264	
Total Venting VOC Emissions	tpy	0.11	0.11	0.10	***0.31***
Equipment MSS Refilling					
Vented to Control	Yes/No	Yes	Yes	Yes	
Equipment VOC Loading Loss	lbs/1,000 gals loaded	9.96	9.96	9.96	
Recovery VOC Loading Loss	lbs/event	6.33	6.33	1,158.92	
Recovery VOC Loading Loss	tpy	0.06	0.06	5.79	***5.92***

Notes:
1. The MSS emission calculations included in this permit application are for cap calculation purposes only. These emission calculations are not to be considered enforceable representations as to the magnitude, duration, and/or frequency of individual activities.

Table B-5
Air Mover and VacuumTruck MSS Emissions (EPN: MSS)
KM Liquids Terminals LLC
Galena Park Terminal

Basis - Air Mover & Vacuum Mover (Control & No Control)
Emissions calculated based on loading loss equation (Equation 1, AP-42, Section 5.2)
Saturation factor assumed to be 1.45, splash loading.
Volume of vapor displaced is two times the volume of liquid transferred. This is to account for the vacuum hose sucking air during part of the transfer.

										Vapors Routed to Control (EPN: MSS)	
Load Type and Control Method	**Product**	**Vapor MW**	**VP**		**Loading Loss**		**Throughput**			**tpy**	
Air Mover& Vacuum Mover - Thermal Control	High Vapor Pressure Products	66	11	psia	1020.18	lb/1000bbl	1,275	bbl/yr		1.30	tpy
Air Mover & Vacuum Mover - Thermal Control	Low Vapor Pressure Products	130	0.5	psia	91.34	lb/1000bbl	1,275	bbl/yr		0.12	tpy
								Totals		***1.44***	***tpy***

Notes:
1. The MSS emission calculations included in this permit application are for cap calculation purposes only. These emission calculations are not to be considered enforceable representations as to the magnitude, duration, and/or frequency of individual activities.

US EPA ARCHIVE DOCUMENT

US EPA ARCHIVE DOCUMENT

Table B-6
Frac Tank GHG MSS Emissions (EPN: MSS)
KM Liquids Terminals LLC
Galena Park Terminal

Filling Basis

Emissions calculated based on loading loss factors (Tables 5.2-1, AP-42, Section 5.2).
Saturation factor assumed to be 0.6, tank truck submerged loading dedicated service.

Product	Load Type	MW	Max VP	Loading Loss Factor		Annual Throughput (bbl/yr)		Vapors Routed to Control tpy (50 tanks)	
Misc. Process Liquids	Submerged Load	66	11	10.0511	lb/1000 ga	7,143	bbl/yr	1.51	tpy
							Totals	***1.51***	***tpy***

Sample Equation for Filling Emissions (tpy)

$L_{L\ (lbs/Mgal)}$ = 12.46 SPM/T
(12.46) x (0.6) x (66) x (11) / (460 + 80) = 10.05 lb/Mgal
(10.05 lb/Mgal) / (1000 gal/Mgal) x (7,143 bbl/yr x 42 gals/bbl) x (1-0.99) = 1.51 tpy

Breathing Emissions

Tank Data	
Shell Length (ft)	46.67
Diameter (ft)	8.75
Volume (gallons)	18,000
Turnovers:	1
Net Throughput (gal/yr)	18,000

Emissions per Frac Tank

Tank	Contents	Maximum Breathing Loss (lb/month) (1)
Frac Tank	Misc. Process Liquids	230.46

Short-Term Breathing Vapors Routed to Control

Number of idle tanks per hour: 10 tanks
Breathing Emissions per yr (3): 1.96 tpy

Annual Breathing and Working Vapors Routed to Control

Number of Tanks/year: 17 tanks
Total Annual Emissions (4): 3.47 tons

Notes:
1. Based on Tanks 4.0 monthly printout.
2. For cap calculation purposes, assumed each frac tank will be in service for thirty days.
3. Total tpy = annual emissions (tpy) x number of tanks/yr
4. The MSS emission calculations included in this permit application are for cap calculation purposes only. These emission calculations are not to be considered enforceable representations as to the magnitude, duration, and/or frequency of individual activities.

US EPA ARCHIVE DOCUMENT

Table B-7
Controlled GHG MSS Emissions (EPN: MSS)
KM Liquids Terminals LLC
Galena Park Terminal

I. Pilot/Assist Gas GHG Emissions

Natural Gas External Combustion Greenhouse Gas Emission Factors

Units	CO_2	CH_4	N_2O
kg/MMBtu	53.02	1.00E-03	1.00E-04
Global Warming Potential (GWP)	1	21	310
lb/MMBtu	116.89	2.20E-03	2.20E-04

Notes:
1. Emission factors obtained from 40 CFR 98, Subchapter C, Tables C-1 and C-2 and converted from kg/MMBtu to lb/MMBtu by multiplying by 2.2046 lb/kg.
2. Global warming potentials obtained from 40 CFR 98, Subpart A, Table A-1.

Description	EPN	Gas Flow Rate (scf/hr)	Heat Input (MMBtu/hr)	Emissions			
				CO_2	CH_4	N_2O	CO_2e
				tpy	tpy	tpy	tpy
Pilot/Assist Gas Emissions	MSS	480	0.49	250.66	0.00	0.00	250.91
Emission Totals				***250.66***	***0.00***	***0.00***	***250.91***

Notes:
1. Heat Input (MMBtu/yr) = pilot/assist gas flow rate (scf/hr) x natural gas heat content (1,020 but/scf) x (1 MMBtu / 10^6 Btu) x (8,760 hr/yr)
2. Annual emission rate (tpy) = annual heat input (MMBtu/hr) x emission factor (lb/MMBtu) x (1 ton / 2,000 lb)
3. CO_2e annual emission rate (tpy) = CO_2 emission rate (tpy) x CO_2 GWP + CH_4 emission rate (tpy) x CH_4 GWP + N_2O emission rate (tpy) x N_2O GWP

II. MSS Vapor Control GHG Emissions

Naphtha Combustion Greenhouse Gas Emission Factors

Units	CO_2	CH_4	N_2O
kg/MMBtu	68.02	3.00E-03	6.00E-04
Global Warming Potential (GWP)	1	21	310
lb/MMBtu	149.96	6.61E-03	1.32E-03

Notes:
1. Emission factors obtained from 40 CFR 98, Subchapter C, Tables C-1 and C-2 and converted from kg/MMBtu to lb/MMBtu by multiplying by 2.2046 lb/kg.
2. Global warming potentials obtained from 40 CFR 98, Subpart A, Table A-1.

Description	EPN	Annual		Emissions			
		Vapors lb/yr	Heat Release MMBtu/yr	CO_2	CH_4	N_2O	CO_2e
				tpy	tpy	tpy	tpy
FR Tank Roof Landings	MSS	16,801.55	375.03	28.12	0.00	0.00	28.22
Equipment Venting	MSS	12,458.00	278.08	20.85	0.00	0.00	20.93
Air Mover and VacuumTruck	MSS	2,875.81	64.19	4.81	0.00	0.00	4.83
Frac Tank	MSS	6,933.14	154.76	11.60	0.00	0.00	11.65
				28.12	***0.00***	***0.00***	***65.63***

Notes:
1. Heat Input (MMBtu/yr) = vapor flow rate (lbs/yr) x (1 gal / 5.6 lbs) x naphtha heat content (0.125 MMBu/gal)
2. Annual emission rate (tpy) = annual heat input (MMBtu/hr) x emission factor (lb/MMBtu) x (1 ton / 2,000 lb)
3. CO_2e annual emission rate (tpy) = CO_2 emission rate (tpy) x CO_2 GWP + CH_4 emission rate (tpy) x CH_4 GWP + N_2O emission rate (tpy) x N_2O GWP

III. Marine Loading GHG Emission Totals

Operation Type	Pollutant	Emissions (ton/yr)
Controlled MSS	CO_2	279
	CH_4	0
	N_2O	0
	CO_2e	317

Appendix C

RACT/BACT/LAER Clearinghouse Search Tables

US EPA ARCHIVE DOCUMENT

US EPA ARCHIVE DOCUMENT

RBLC Database Search Results for GHG Emissions from Heaters and Boilers

RBLCID	Facility Name	Corporate or Company Name	Facility State	Permit Issuance Date	Process Name	Primary Fuel	Thruput	Thruput Units	Pollutant	Control Method Description	Emission Limit 1	Emission Limit 1 Units
AL-0231	NUCOR DECATUR LLC	NUCOR CORPORATION	AL	06/12/2007 ACT	VACUUM DEGASSER BOILER	NATURAL GAS	95	MMBTU/H	Carbon Dioxide		0.061	LB/MMBTU
*FL-0330	PORT DOLPHIN ENERGY LLC		FL	12/01/2011 ACT	Boilers (4 - 278 mmbtu/hr each)	natural gas	0		Carbon Dioxide	tuning, optimization, instrumentation and controls, insulation, and turbulent flow.	117	LB/MMBTU
LA-0248	DIRECT REDUCTION IRON PLANT	CONSOLIDATED ENVIRONMENTAL MANAGEMENT INC - NUCOR	LA	01/27/2011 ACT	DRI-108 - DRI Unit #1 Reformer Main Flue Stack	Iron Ore and Natural Gas	12168	Billion Btu/yr	Carbon Dioxide	the best available technology for controlling CO2e emissions from the DRI Reformer is good combustion practices, the Acid gas separation system, and Energy integration. BACT shall be good combustion practices, which will be adhered to maintain low levels of fuel consumption by the LNB burners.	11.79	MMBTU/TON OF DRI
LA-0248	DIRECT REDUCTION IRON PLANT	CONSOLIDATED ENVIRONMENTAL MANAGEMENT INC - NUCOR	LA	01/27/2011 ACT	DRI-208 - DRI Unit #2 Reformer Main Flue Stack	Iron ore and Natural Gas	12168	Billion Btu/yr	Carbon Dioxide	the best available technology for controlling CO2e emissions from the DRI Reformer is good combustion practices, the Acid gas separation system, and Energy integration. BACT shall be good combustion practices, which will be adhered to maintain low levels of fuel consumption by the LNB burners.	11.79	MMBTU/TON OF DRI
LA-0254	NINEMILE POINT ELECTRIC GENERATING PLANT	ENTERGY LOUISIANA LLC	LA	08/16/2011 ACT	AUXILIARY BOILER (AUX-1)	NATURAL GAS	338	MMBTU/H	Carbon Dioxide	PROPER OPERATION AND GOOD COMBUSTION PRACTICES	117	LB/MMBTU

RBLCID	Facility Name	Corporate or Company Name	Facility State	Permit Issuance Date	Process Name	Primary Fuel	Thruput	Thruput Units	Pollutant	Control Method Description	Emission Limit 1	Emission Limit 1 Units
LA-0254	NINEMILE POINT ELECTRIC GENERATING PLANT	ENTERGY LOUISIANA LLC	LA	08/16/2011 ACT	AUXILIARY BOILER (AUX-1)	NATURAL GAS	338	MMBTU/H	Methane	PROPER OPERATION AND GOOD COMBUSTION PRACTICES	0.0022	LB/MMBTU

RBLCID	Facility Name	Corporate or Company Name	Facility State	Permit Issuance Date	Process Name	Primary Fuel	Thruput	Thruput Units	Pollutant	Control Method Description	Emission Limit 1	Emission Limit 1 Units
LA-0254	NINEMILE POINT ELECTRIC GENERATING PLANT	ENTERGY LOUISIANA LLC	LA	08/16/2011 ACT	AUXILIARY BOILER (AUX-1)	NATURAL GAS	338	MMBTU/H	Nitrous Oxide (N2O)	PROPER OPERATION AND GOOD COMBUSTION PRACTICES	0.0002	LB/MMBTU

Appendix D

TCEQ Permit Application

US EPA ARCHIVE DOCUMENT