US EPA ARCHIVE DOCUMENT

14450 JFK Blvd., Suite 400, Houston, Texas 77032, USA
T +1 713 330 8500 **F** +1 281 987 3500 **W** www.rpsgroup.com

Application for Prevention of Significant Deterioration Air Permit for Greenhouse Gas Emissions

Enterprise Mont Belvieu Complex Eagleford Fractionation and DIB Units

Submitted by

Enterprise Products Operating LLC
P.O. Box 4324
Houston, Texas 77210-4324

December 2011

Revised May 2012

US EPA ARCHIVE DOCUMENT

Table of Contents

List of Sections

Section 1 Introduction 1-1

Section 2 Administrative Information and PSD Applicability Forms 2-1

Section 3 Area Map and Plot Plan 3-1

Section 4 Project and Process Description 4-1
4.1 Fractionation Units 4-1
4.2 Deisobutanizer Unit 4-2

Section 5 Emission Rate Basis 5-1
5.1 Hot Oil and Regenerant Heater Emissions 5-1
5.2 Flare Emissions 5-2
5.3 Process Fugitive Emissions 5-3

Section 6 Best Available Control Technology 6-1
6.1 Hot Oil and Regenerant Heaters 6-2
6.2 Flare 6-7
6.3 Process Fugitives 6-9

List of Tables

Table 1F Air Quality Application Supplement 2-3
Table 2F Project Emissions Increase 2-4
Table 5-1 Proposed GHG Emission Limits 5-3
Table 6-1 Approximate Cost for Construction and Operation of a Post-Combustion Carbon Capture and Sequestration (CCS) System for GHG Emissions Control for the Enterprise Eagleford Frac and DIB Units 6-11

List of Figures

Figure 3-1 Area Map 3-2
Figure 3-2 Mont Belvieu Plot Plan 3-3
Figure 4-1 Simplified Process Flow Diagram - Frac Units 4-4
Figure 4-2 Simplified Process Flow Diagram - DIB Unit 4-5

List of Appendices

Appendix A Emissions Calculations

Appendix B RBLC Database Search Results

Appendix C Copy of TCEQ Air Permit Application

US EPA ARCHIVE DOCUMENT

Section 1
Introduction

Enterprise Products Operating LLC (Enterprise) currently operates the Mont Belvieu Complex, an oil and gas production facility in Chambers County. Enterprise proposes to construct two new fractionation process (Eagleford Frac) units and a deisobutanizer (DIB) unit at the Mont Belvieu Complex. The new fractionation facilities will include:

- Two Fractionation Unit deethanizer distillation columns,
- Two Fractionation Unit depropanizer distillation columns,
- Two Fractionation Unit debutanizer distillation columns,
- Two natural gas fired hot oil heaters,
- Two natural gas fired regenerant gas heaters,
- Cooling towers,
- New flare to treat process vents from the (EPN SK25.001),
- Ancillary tanks,
- A deisobutanizer distillation column, and
- New flare to treat process vents from the Frac and DIB units (EPN SK25.001).

A New Source Review permit amendment application was submitted to TCEQ for this project on December 16, 2011. The project triggers NNSR for VOC and PSD review for CO, for which TCEQ has approved permitting programs, and PSD for greenhouse gas (GHG) emissions, for which TCEQ has not implemented a PSD permitting program. The project is not subject to PSD review for any other pollutants. The purpose of this permit application is to obtain a PSD permit from EPA for the GHG emissions associated with the project.

This document constitutes Enterprise's GHG PSD permit application for the modifications described above. Because EPA has not developed application forms for GHG permitting, TCEQ forms are used where deemed appropriate. The application is organized as follows:

Section 1 identifies the project for which authorization is requested and presents the application document organization.

Section 2 contains administrative information and completed TCEQ Federal NSR applicability Tables 1F, 2F, and 3F.

Section 3 contains an area map showing the facility location and a plot plan showing the location of each emission points with respect to the plant property.

US EPA ARCHIVE DOCUMENT

Section 4 contains more details about the proposed modifications and changes in operation and a brief process description and simplified process flow diagram.

Section 5 describes the basis of the calculations for the project GHG emissions increases and includes the proposed GHG emission limits.

Section 6 includes an analysis of best available control technology for the new and modified sources of GHG emissions.

Appendix A contains GHG emissions calculations for the affected facilities.

Appendix B contains the results of an RBLC database search for GHG controls used on gas fired heaters and boilers.

Appendix C contains a copy of the TCEQ air permit application for the project.

US EPA ARCHIVE DOCUMENT

Section 2
Administrative Information and PSD Applicability Forms

This section contains the following forms:

- Administrative Information
- TCEQ Table 1F
- TCEQ Table 2F
- TCEQ Table 3F

Tables 1F, 2F and 3F are federal NSR applicability forms. Because this application covers only GHG emissions, and PSD permitting of other pollutants is being conducted by TCEQ, these forms only include GHG emissions. As shown in both the Table 1F and 2F, GHG emissions from the project exceed 75,000 tpy of CO_2e; therefore, a Table 3F, which includes the required netting analysis, is also included. The net increase in GHG emissions exceeds 75,000 tpy of CO_2e; therefore, PSD review is required.

US EPA ARCHIVE DOCUMENT

Administrative Information

A. Company or Other Legal Name: Enterprise Products Operating LLC		
B. Company Official Contact Name (☒ Mr. ☐Mrs. ☐Ms. ☐Dr.): Mr. Terry L. Hurlburt		
Title: Senior Vice President		
Mailing Address: P.O. Box 4324		
City: Houston	State: TX	ZIP Code: 77210
Telephone No.: 713-381-6595	Fax No.: 713-880-6660	E-mail Address: snolan@eprod.com
C. Technical Contact Name: Mr. Chris Benton		
Title: Manager – Environmental Permitting		
Company Name: Enterprise Products Operating LLC		
Mailing Address: PO Box 4324		
City: Houston	State: TX	ZIP Code: 77210
Telephone No.: 281-381-5437	Fax No.: 713-880-6660	E-mail Address: crbenton@eprod.com
D. Facility Location Information:		
Street Address: 10207 FM 1942		
If no street address, provide clear driving directions to the site in writing:		
City: Mont Belvieu	County: Chambers	ZIP Code: 77580
E. TCEQ Account Identification Number (leave blank if new site or facility): CI 0008-R		
F. TCEQ Customer Reference Number *(leave blank if unknown):* CN6032211277		
G. TCEQ Regulated Entity Number *(leave blank if unknown)*: RN102323268		
H. Site Name: Mont Belvieu Complex		
I. Area Name/Type of Facility: Eagleford Fractionation and DIB Units	☒ Permanent ☐ Portable	
J. Principal Company Product or Business: Natural gas liquids processing		
K. Principal Standard Industrial Classification Code: 1321 – Natural Gas Liquids		
L. Projected Start of Construction Date: 11/01/2012	Projected Start of Operation Date: 11/01/2013	
SIGNATURE		
The signature below confirms that I have knowledge of the facts included in this application and that these facts are true and correct to the best of my knowledge and belief.		
NAME: Mr. Terry L. Hurlburt, Senior Vice President		
SIGNATURE:_____ *Original Signature Required*		
DATE:		

US EPA ARCHIVE DOCUMENT

TABLE 1F
AIR QUALITY APPLICATION SUPPLEMENT

Permit No.: **TBD**	Application Submittal Date:	**December 2011, Revised May 2012**
Company: **Enterprise Products Operating LLC**		
RN: **102323268**	Facility Location: **10207 FM 1942**	
City: **Mont Belvieu**	County: **Chambers**	
Permit Unit I.D.: **Eagleford Fractionation Unit**	Permit Name: **Mont Belvieu Complex**	
Permit Activity: New Source ___ Modification **X**		
Project or Process Description: **Eagleford Fractionation Units and DIB Unit**		

Complete for all Pollutants with a Project Emission Increase.	POLLUTANTS											
	Ozone		CO	PM	PM_{10}	$PM_{2.5}$	NO_x	SO_2	H_2S	TRS	Pb	Other[1]
	VOC	NO_x										
Nonattainment? (yes or no)	**Yes**	**Yes**	**No**	**No**	**No**	**No**	**No**	**No**	**NA**	**NA**	**No**	**GHG**
Existing site PTE (tpy)?												**>100,000**
Proposed project emission increases (tpy from 2F)[2]												**213,494**
Is the existing site a major source? [3]If not, is the project a major source by itself?	**NA**	**NA**	**NA**	**NA**	**NA**	**NA**	**NA**	**NA**	**NA**	**NA**	**NA**	**NA**
Significance Level (tpy)	**5**	**5**	**100**	**25**	**15**	**10**	**40**	**40**	**10**	**10**	**0.6**	**75,000**
If site is major, is project increase significant?												**Yes**
If netting required, estimated start of construction?							**1-Nov-12**					
Five years prior to start of construction							**1-Nov-07**					contemporaneous
Estimated start of operation							**1-Nov-13**					period
Net contemporaneous change, including proposed project, from Table 3F. (tpy)	**NA**	**NA**	**NA**	**NA**	**NA**	**NA**	**NA**	**NA**	**NA**	**NA**	**NA**	**711,304**
FNSR APPLICABLE? (yes or no)												**Yes**

1 Other PSD pollutants.
2 Sum of proposed emissions minus baseline emissions, increases only. Nonattainment thresholds are found in Table 1 in 30 TAC 116.12(11) and PSD thresholds in 40 CFR § 51.166(b)(23).
3 Nonattainment major source is defined in Table 1 in 30 TAC 116.12(11) by pollutant and county. PSD thresholds are found in 40 CFR § 51.166(b)(1).

The representations made above and on the accompanying tables are true and correct to the best of my knowledge.

Senior Vice President

Signature | Title | Date

TCEQ - 10154 (Revised 10/08) Table 1F
These forms are for use by facilities subject to air quality permit requirements and may be revised periodically. (APDG 5912v1)

US EPA ARCHIVE DOCUMENT

US EPA ARCHIVE DOCUMENT

TABLE 2F
PROJECT EMISSION INCREASE

Pollutant[1]:	**GHG**	**Permit No.:**	**TBD**
Baseline Period:	**NA**	**Project Name:**	**Eagleford Fractionation Unit**

	Affected or Modified Facilities[2]			Permit No.	Actual Emissions[3] (tons/yr)	Baseline Emissions[4] (tons/yr)	Proposed Emissions[5] (tons/yr)	Projected Actual Emissions (tons/yr)	Difference (B-A)[6] (tons/yr)	Correction[7] (tons/yr)	Project Increase[8] (tons/yr)
					December	A	B				
	FIN	EPN	Facility Name								
1	HR15.001A	HR15.001A	Hot Oil Heater	TBD		-	73,058	73,058	73,058	0	73,058
2	HR15.001B	HR15.001B	Hot Oil Heater	TBD		-	73,058	73,058	73,058	0	73,058
3	HR15.002A	HR15.002A	Regenerant Heater	TBD		-	14,872	14,872	14,872	0	14,872
4	HR15.002B	HR15.002B	Regenerant Heater	TBD		-	14,872	14,872	14,872	0	14,872
5	FRAC F EFa	FRAC F EFa	Process Fugitives	TBD	-	-	11	11	11	0	11
6	FRAC F EFb	FRAC F EFb	Process Fugitives	TBD	-	-	11	11	11	0	11
7	SK25.001	SK25.001	Flare	TBD	-	-	37,612	37,612	37,612	0	37,612
8											
9											
10											
11											
12											
13											
										Page Subtotal[9]:	**213,494**
										Project Total:	**213,494**

US EPA ARCHIVE DOCUMENT

Table 3F
Project Contemporaneous Changes

Company: **Enterprise Products Operating LLC**

Criteria Pollutant: **GHG**

Permit Application No. **TBD**

No.	PROJECT DATE	EMISSION UNIT AT WHICH REDUCTION OCCURED FIN	EPN	PERMIT NUMBER	PROJECT NAME OR ACTIVITY **December 2011, Revised May 2012**	A PROPOSED EMISSIONS (tons / year)	B BASELINE EMISSIONS (tons / year)	C DIFFERENCE (A-B) (tons / year)	CREDITABLE DECREASE OR INCREASE (tons / year)
1	January 1, 2008	TURB/SCR	42	20698	Turbine Modification (Solar T-16000 101CM12101)	62,000	50,000	12,000	12,000
2	Dec 2009	FWP1	FWP1	5581	430-hp Diesel Firewater Pump Engine Addition	1,000	0	1,000	1,000
3	Dec 2009	FWP2	FWP2	106.511 (PBR)	230-hp Diesel Firewater Pump Engine Addition	1,000	0	1,000	1,000
4	Dec 2009	FWP3	FWP3	106.511 (PBR)	368-hp Diesel Firewater Pump Engine Addition	1,000	0	1,000	1,000
5	Dec 2009	FWP4	FWP4	106.511 (PBR)	430-hp Diesel Firewater Pump Engine Addition	1,000	0	1,000	1,000
6	May,2009	HR 15.001	HR 15.001	87477 (Std Permit)	Frac IV Hot Oil Heater Addition (140 MMBtu/hr @0.025 lb/MMBtu)	73,058	0	73,058	73,058
7	May,2009	HR 15.002	HR 15.002	87477 (Std Permit)	Frac IV Regen Heater Addition (28.5 MMBtu/hr @0.025 lb/MMBtu)	14,872	0	14,872	14,872
8	May,2009	FL-4	FL-4	87477 (Std Permit)	Frac IV Flare Addition	18,473	0	18,473	18,473
9	December, 2010	HR 16.001	HR 16.001	93268 (Std Permit)	Frac V Hot Oil Heater Addition (140 MMBtu/hr @0.025 lb/MMBtu)	73,058	0	73,058	73,058
10	December, 2010	HR 16.002	HR 16.002	93268 (Std Permit)	Frac V Regen Heater Addition (28.5 MMBtu/hr @0.025 lb/MMBtu)	14,872	0	14,872	14,872
11	December, 2010	FL-4	FL-4	87477 (Std Permit)	FRAC V Flare Mod (Shared Flare Frac 4, 5)	36,946	18,473	18,473	18,473
12	January 10, 2011	SHOH	SHOH	94065 (Std Permit)	South Heater	73,058	0	73,058	73,058
13	2012 (Projected)	NDIB-FL	FL-4	94067 (PBR)	New North Plant DIB Contribution to Frac IV Flare	666	0	666	666
								PAGE SUBTOTAL:	302,530

US EPA ARCHIVE DOCUMENT

Table 3F
Project Contemporaneous Changes

Company: **Enterprise Products Operating LLC**

Criteria Pollutant: **GHG**

Permit Application No. **TBD**

No.	PROJECT DATE	EMISSION UNIT AT WHICH REDUCTION OCCURED FIN	EPN	PERMIT NUMBER	PROJECT NAME OR ACTIVITY **December 2011, Revised May 2012**	A PROPOSED EMISSIONS (tons / year)	B BASELINE EMISSIONS (tons / year)	C DIFFERENCE (A-B) (tons / year)	CREDITABLE DECREASE OR INCREASE (tons / year)
14	2012 (Projected)	SEM-TRFRG1	10/11	8707	Chiller Installation	26,900	25,000	1,900	1,900
15	2012 (Projected)	SEM-TRFRG2	10/11	8707	Chiller Installation	26,900	25,000	1,900	1,900
16	2012 (Projected)	HR 17.001	HR 17.001	95777 (Std Permit)	Frac VI Hot Oil Heater Addition	73,058	0	73,058	73,058
17	2012 (Projected)	HR 17.002	HR 17.002	95777 (Std Permit)	Frac VI Regen Heater Addition	14,872	0	14,872	14,872
18	2012 (Projected)	FL-4	FL-4	95777 (Std Permit)	FRAC VI Flare Mod (Shared Flare Frac 4, 5, 6)	56,085	14	56,071	56,071
19	2012 (Projected)	WTF-T4	WTF-T4	6798	Turbine Replacement and HRU ann. firing increase	23,000	15,000	9,500	9,500
20	2012 (Projected)	Cogen 3 Turb 1, 2, 3	61	22113	Turbine firing rate increase	69,000	31,000	38,000	38,000
21	November, 2013	HR15.001A	HR15.001A	TBD	Eagleford Frac Project Hot Oil Heater	73,058	0	73,058	73,058
22	November, 2013	HR15.001B	HR15.001B	TBD	Eagleford Frac Project Hot Oil Heater	73,058	0	73,058	73,058
23	November, 2013	HR15.002A	HR15.002A	TBD	Eagleford Frac Project Regenerant Heater	14,872	0	14,872	14,872
24	November, 2013	HR15.002B	HR15.002B	TBD	Eagleford Frac Project Regenerant Heater	14,872	0	14,872	14,872
25	November, 2013	FL-4	FL-4	TBD	Eagleford Frac Flare Mod (Shared Flare)	37,612	0	37,612	37,612
								PAGE SUBTOTAL:	408,774
	Summary of Contemporaneous Changes							TOTAL :	**711,304**

Section 3
Area Map and Plot Plan

An Area Map showing the location of the Mont Belvieu Complex is presented in Figure 3-1. A plot plan showing the location of the modified facilities is presented in Figure 3-2.

US EPA ARCHIVE DOCUMENT

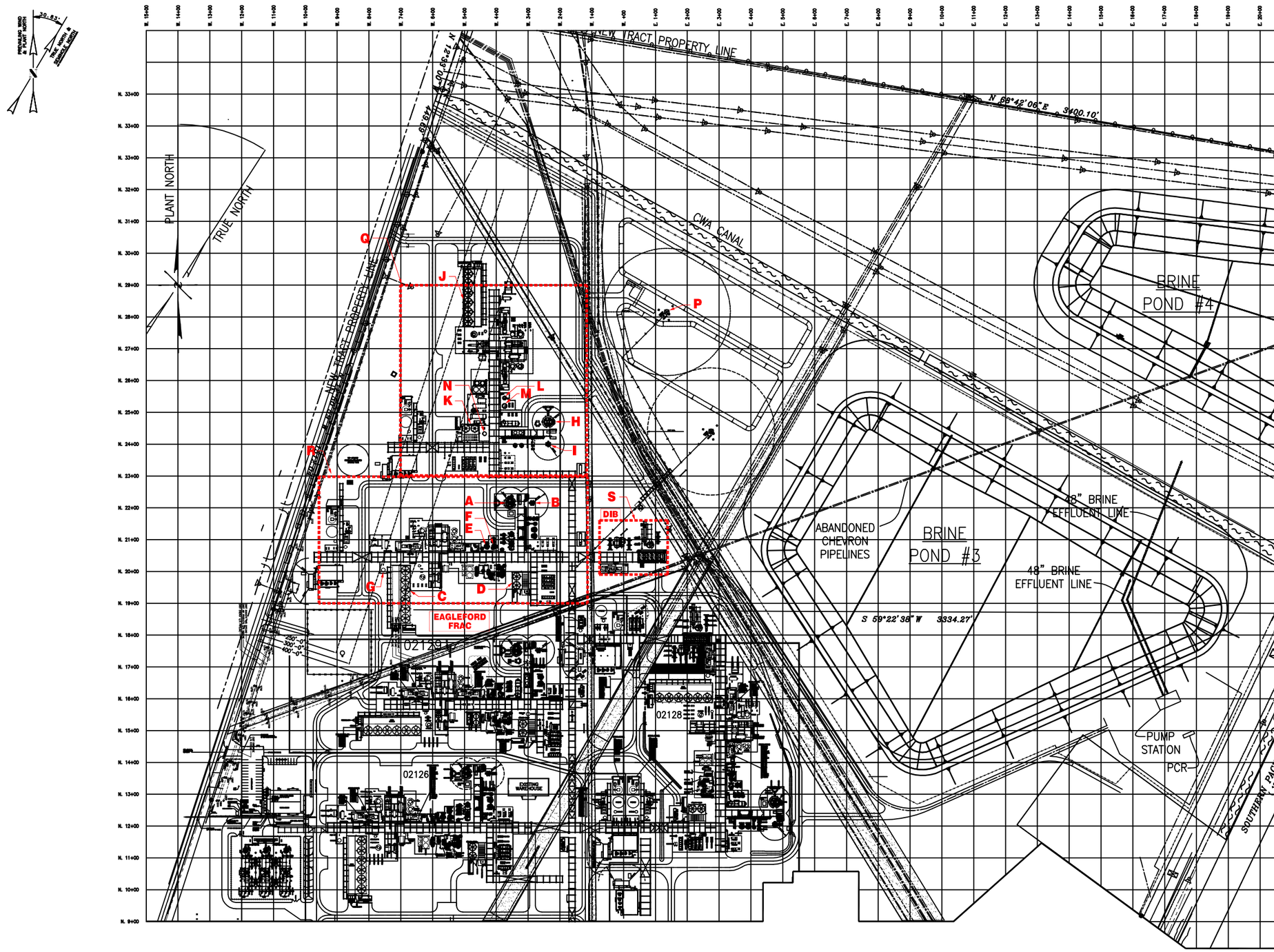

REF.	EQUIP. NUMBER	LONGITUDE	LATITUDE
A	HR15.001 (A)	W 94.915824	N 29.864707
B	HR15.002 (A)	W 94.91562	N 29.864828
C	HT16.028 (A)	W 94.916500	N 29.863507
D	HT16.029 (A)	W 94.915609	N 29.863833
E	SV19.002 (A)	W 94.916221	N 29.864093
F	SV19.003 (A)	W 94.91606	N 29.86413
G	SV19.006 (A)	W 94.917369	N 29.863637
H	HR15.001 (B)	W 94.916071	N.29.865489
I	HR15.002 (B)	W 94.915996	N.29.865442
J	HT16.028 (B)	W 94.917498	N 29.866559
K	HT16.029 (B)	W 94.916865	N 29.864986
L	SV19.002 (B)	W 94.916811	N 29.865619
M	SV19.003 (B)	W 94.916747	N 29.865591
N	SV19.006 (B)	W 94.916446	N 29.864968
P	SK25.001	W 94.915727	N 29.866735
Q	FRAC F EFb	W 94.917132	N 29.865105
R	FRAC F EFa	W 94.91718	N 29.864409
S	DIB	W 94.91472	N 29.864544

Enterprise Products Operating LLC
Mont Belvieu Plant

Figure 3-2
Plot Plan

RPS

14450 JFK Boulevard, Suite 400,
Houston, Texas, 77032

US EPA ARCHIVE DOCUMENT

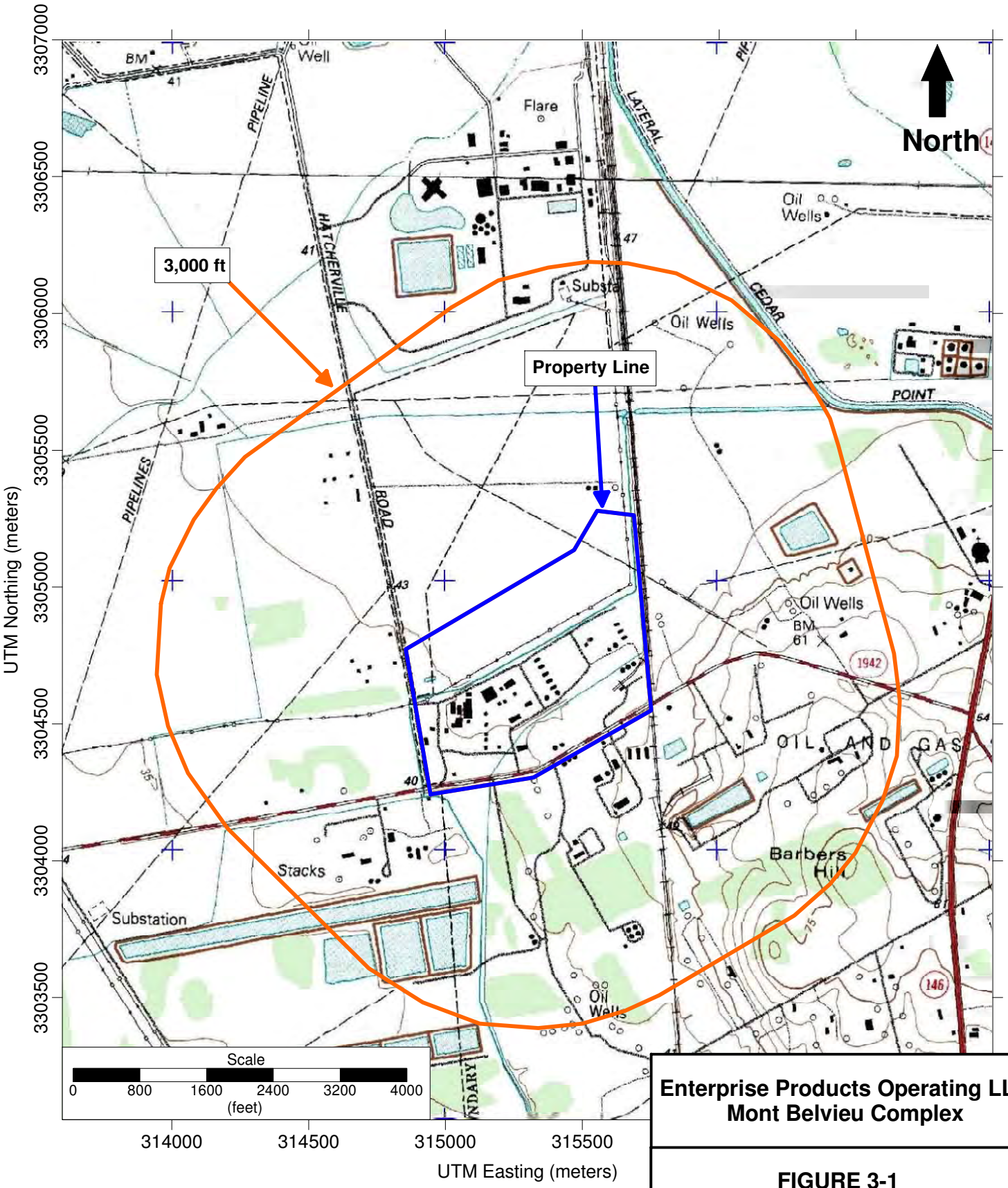

Enterprise Products Operating LLC
Mont Belvieu Complex

FIGURE 3-1
Area Map

Source: mytopo.com/
Zone: 15
Coordinate Datum: NAD 83

RPS

14450 JFK Blvd., Suite 400
Houston, TX 77032

Section 4
Project and Process Description

The natural gas liquids (NGL) fractionation units at the Mont Belvieu Complex to be authorized by this permit will be used to separate an NGL feed into separate ethane, propane, butane, and gasoline fractions. A simplified process flow diagram for the fractionation units is shown in Figure 4-1. The deisobutanizer (DIB) unit is used to separate isobutane and normal butane from mixed butane streams. A simplified process flow diagram for the DIB Unit is shown in Figure 4-2. Each unit consists of a number of fractionation columns and other operations as described below. Each of the two fractionation units will have a nominal feed capacity of 110,000 barrels per day. Some of the output from the fractionation units will leave the complex as product and some will feed the assocated DIB unit.

4.1 Fractionation Units

The pipeline feed mixture is processed in the feed filter, feed coalescer, and amine contactors to remove particulates, sulfides, and carbon dioxide. The sweetened feed is then dehydrated and fed to the Deethanizer column. The Deethanizer is used to fractionate the feed into two fractions. The overhead vapor fraction consists of ethane and lighter components and is condensed by heat exchange against propylene refrigerant. Propylene vapor from the Deethanizer condenser is first compressed in a two-stage machine and then is condensed in a wet-surface air cooler (EPNs HT 16.028A and B). The liquid propylene is then sub-cooled against low-temperature ethane before being fed back to the Deethanizer column condenser as refrigerant. A portion of the condensed ethane is pumped out of the unit as ethane product to the existing storage facility, and the balance is refluxed back to the column. The bottom fraction from the column, consisting mainly of propane and heavier components, is fed to the Depropanizer column. Heat for fractionation is provided by a hot oil reboiler at the bottom of the column.

The Depropanizer column takes the feed from the Deethanizer bottom and separates it into a propane and lighter fraction, which goes overhead, and a butane and heavier fraction, which exits the bottom. Condensing for the column is provided by a heat pump circuit and a wet-surface air cooler. The propane heat pump circuit exchanges against the Depropanizer side reboiler and two reboilers attached to the Deethanizer column. The wet-surface air cooler (EPNs HT16.029A and B) is used to sub-cool the condensed propane. Part of the propane is

US EPA ARCHIVE DOCUMENT

refluxed back to the column and the balance is sent to the existing storage complex as product. Heat for fractionation is provided by a hot oil reboiler at the bottom of the column.

The stream from the bottom of the Depropanizer is fed to the Debutanizer column, which fractionates it into an overhead stream containing mixed butanes (primarily normal butane and isobutane), and a bottoms gasoline stream which contains pentanes and heavier. Part of the overhead butane stream is refluxed back to the column and the balance is sent to storage tanks as an intermediate feed for other units or as commercial butane product. The bottoms gasoline is routed to existing gasoline treating facilities. Condensing for the Debutanizer is provided by the Deethanizer Upper Side Reboiler, and heat for fractionation in the Debutanizer is provided by a hot oil reboiler at the bottom of the column.

Hot oil used in the column reboilers is provided by a natural gas fired hot oil system (EPNs HR15.001A and B). The same hot oil heater also supplies heat for the amine regeneration column used to sweeten the NGL entering the unit. The heat needed for the dehydration system is provided by the regenerant gas heater (EPNs HR15.002A and B).

Ancillary to each of the fractionators will be three tanks. One tank in each Frac will store 85% diethanolamine (EPNs SV19.002A and B) and one will store 25% diethanolamine (EPNs SV18.003A and B). Each of these tanks will store material with a VOC vapor pressure of less than 0.00002 psia and have no applicable requirements. A wastewater tank will also be included in each Frac (EPNS SV19.006A and B).

Emission sources from this process include process emissions from heaters, cooling towers, tanks, equipment leak fugitives (EPNs FRAC F EFa, FRAC F EFb), and process vents that will be routed to a new flare (EPN SK25.001). Of these, the heaters, equipment leak fugitives, and flaring of process vents produce GHG emissions. The requirements of NSPS Subparts A and KKK and TCEQ Chapters 111, 112, 115, and 117 apply to the operations of each Fractionation Unit.

4.2 Deisobutanizer Unit

Butane mixtures arrive at the Mont Belvieu Complex via pipeline and enter the DIB unit from the butamer units, or from the Mont Belvieu Complex storage facility, as commercial butane mixtures. The mixed butanes are routed to the deisobutanizer distillation column, where the separation of isobutane and normal butane occurs. The overhead vapor stream from the

US EPA ARCHIVE DOCUMENT

column is isobutane, which is compressed into liquid phase isobutane. The liquefied isobutane product is split into two streams, one providing reflux for the column, and the remaining stream sent to the storage area or delivered to other Enterprise units as feed material. The overhead compressors are electric driven and do not have any combustion emissions.

The bottoms stream from the DIB distillation column contains pentane and C_6+ hydrocarbons that are removed by further processing. The bottoms stream, mainly normal butane, is routed to the Pentane Stripper distillation columns A and B where the pentane and the C_6+ are removed and the purified n-butane is returned to butane isomerization as feed.

Emission sources from this process include equipment leak fugitives and process vents which are routed to a new flare (EPN SK25.001). Flaring of the process vents results in GHG emissions. The equipment leak fugitives in the DIB Unit do not contain methane or other GHGs.

US EPA ARCHIVE DOCUMENT

US EPA ARCHIVE DOCUMENT

ENTERPRISE MONT BELVIEU
FRACTIONATORS A/B
BLOCK FLOW DIAGRAM
FOR PERMITTING PURPOSES
DECEMBER, 2011
FIGURE 4-1

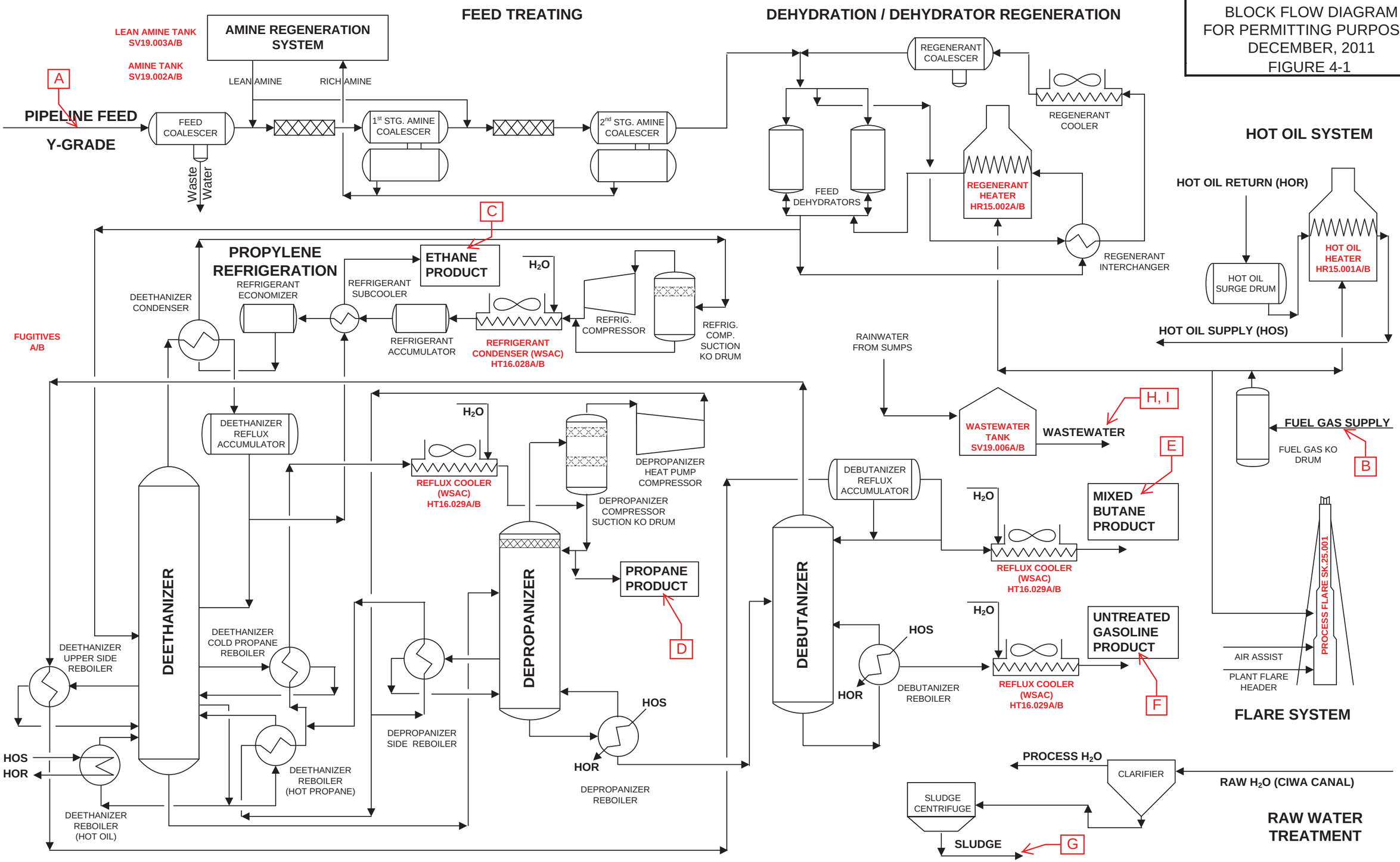

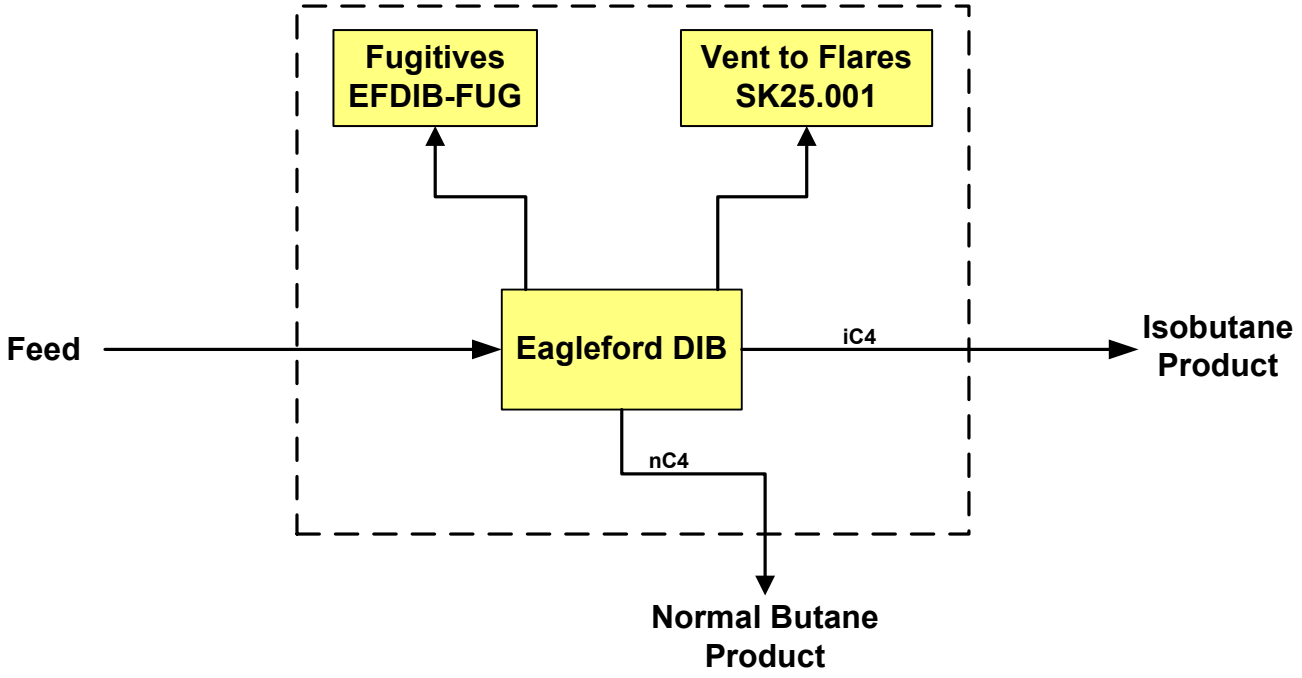

Enterprise Products Operating LLC
Mont Belvieu Complex

Figure 4-2
Process Flow Diagram

RPS

14450 JFK Boulevard, Suite 400,
Houston, Texas, 77032.

US EPA ARCHIVE DOCUMENT

Section 5
Emission Rate Basis

This section contains a description of the increases in GHG emissions from new and modified facilities associated with the project. GHG emission calculations methods are also described, and the resulting GHG emission rates are presented in Table 5-1 for each emission point. Emissions calculations are included in Appendix A.

5.1 Hot Oil and Regenerant Heater Emissionss

There will be four new natural gas fired process heaters constructed for the project: two Hot Oil Heaters (EPNs HR 15.001A and B) and two Regenerant Heaters (EPNs HR 15.002A and B). Annual GHG emissions were calculated based on the maximum fuel firing rate of each heater occurring continuously (8,760 hr/yr) all year. CO_2 emissions were calculated based on the carbon content of the natural gas using Equation C-5 in 40 CFR Part 98, Chapter C. Emissions of CH_4 and N_2O were calculated from emission factors from Table C-2 of Appendix A to 40 CFR Part 98, Chapter C.

5.2 Flare Emissions

The two proposed frac units and the proposed DIB unit will each have vents that will be routed to a new flare (EPN SK25.001) for control. These streams contain VOCs that when combusted by the flare produce CO_2 emissions. Natural gas used as assist gas to maintain the minimum heating value required for complete combustion also contains hydrocarbons, primarily methane, that also produce CO_2 emissions when burned. Any unburned methane from the flare will also be emitted to the atmosphere, and small quantities of N_2O emissions can result from the combustion process. Emissions of these pollutants were calculated based on the carbon content of the waste streams sent to the flare and of the natural gas used for assist with the same equations and emission factors from 40 CFR Part 98 that were used for the gas fired heaters. These equations and factors were applied to the maximum projected annual waste gas and natural gas flow rates to the flare.

5.3 Process Fugitive Emissions

Process fugitive (equipment leak) emissions consist of methane from the new piping components in the new Frac Unit (EPNs FRAC F EFa and FRAC F EFb) No significant

US EPA ARCHIVE DOCUMENT

methane is present in the process streams in the proposed DIB Unit. The 28LAER leak detection and repair (LDAR) program will be applied to the new piping components associated with the Project. In addition, all flanges and connectors will be monitored quarterly using the same leak detection level used for valves. All emissions calculations utilize current TCEQ factors and methods in the TCEQ's *Air Permit Technical Guidance for Chemical Sources: Equipment Leak Fugitives, October 2000.* Each fugitive component was classified first by equipment type (valve, pump, relief valve, etc.) and then by material type (gas/vapor, light liquid, heavy liquid). Uncontrolled emission rates were obtained by multiplying the number of fugitive components of a particular equipment/material type by the appropriate SOCMI emission factor. To obtain controlled fugitive emission rates, the uncontrolled rates were multiplied by a control factor, which was determined by the 28LAER LDAR program. The methane emissions were then calculated by multiplying the total controlled emission rate by the weight percent of methane in the process streams. The fugitive emissions calculations are included in Appendix B.

US EPA ARCHIVE DOCUMENT

Table 5-1 Proposed GHG Emission Limits

Description	EPN	CO_2e Emission Rate (tpy)
Frac A Hot Oil Heater	HR15.001A	73,058
Frac B Hot Oil Heater	HR15.001B	73,058
Frac A Regenerant Heater	HR15.002A	14,872
Frac B Regenerant Heater	HR15.002B	14,872
Frac A Process Fugitives	FRAC F EFa	11
Frac B Process Fugitives	FRAC F EFb	11
Flare	SK25.001	37,612
Total		**213,494**

US EPA ARCHIVE DOCUMENT

Section 6
Best Available Control Technology

PSD regulations require that the best available control technology (BACT) be applied to each new and modified facility that emits an air pollutant for which a significant net emissions increase will occur from the source. The only PSD pollutant addressed in this permit application is GHG. The new facilities associated with the project that emit GHGs include two Hot Oil Heaters (EPNs HR 15.001A and B), two Regenerant Heaters (EPNs HR 15.002A and B), and Process Fugitives (EPNs FRAC F EFa and FRAC F EFb). There will also be GHG emissions from the combustion of new process vent streams in the flare (EPN SK25.001). BACT applies to each of these new sources of GHG emissions.

The U.S. EPA-preferred methodology for a BACT analysis for pollutants and facilities subject to PSD review is described in a 1987 EPA memo (U.S. EPA, Office of Air and Radiation Memorandum from J.C. Potter to the Regional Administrators, December 1, 1987). This methodology is to determine, for the emission source in question, the most stringent control available for a similar or identical source or source category. If it can be shown that this level of control is technically or economically infeasible for the source in question, then the next most stringent level of control is determined and similarly evaluated. This process continues until the BACT level under consideration cannot be eliminated by any substantial or unique technical, environmental, or economic objections. In addition, a control technology must be analyzed only if the applicant opposes that level of control.

In an October 1990 draft guidance document (*New Source Review Workshop Manual (Draft*), October 1990), EPA set out a 5-step process for conducting a top-down BACT review, as follows:

1) Identification of available control technologies;
2) Technically infeasible alternatives are eliminated from consideration;
3) Remaining control technologies are ranked by control effectiveness;
4) Evaluation of control technologies for cost-effectiveness, energy impacts, and environmental effects in order of most effective control option to least effective; and
5) Selection of BACT.

US EPA ARCHIVE DOCUMENT

In its *PSD and Title V Permitting Guidance for Greenhouse Gases* (November 2010), EPA reiterates that this is also the recommended process for permitting of GHG emissions under the PSD program. As such, this BACT analysis follows the top-down approach.

6.1 Hot Oil and Regenerant Heaters

6.1.1 Step 1 – Identification of Potential Control Technologies

To maximize thermal efficiency at the Mont Belvieu Complex, the existing heaters are designed to achieve high thermal efficiencies, which minimizes GHG emissions. The proposed new Hot Oil Heaters (140 MMBtu/hr each) are designed to achieve 89% thermal efficiency, and the Regenerant Heaters (28.5 MMBtu/hr each) are designed to achieve 80% thermal efficiency. These and other potentially applicable technologies to minimize GHG emissions from the heaters include the following:

- Periodic Tune-up – Periodically tune-up of the heaters to maintain optimal thermal efficiency.
- Heater Design – Good heater design to maximize thermal efficiency,
- Heater Air/Fuel Control – Monitoring of oxygen concentration in the flue gas to be used to control air to fuel ratio on a continuous basis for optimal efficiency.
- Waste Heat Recovery – Use of heat recovery from both the heater exhausts and process streams to preheat the heater combustion air, feed (oil) to heaters, or to produce steam for use at the site.
- Product Heat Recovery – Use of heat exchangers throughout the plant to recovery usable heat from product streams reduces overall energy consumption and a reduction in the amount of fuel required by heaters.
- Use of Low Carbon Fuels – Fuels vary in the amount of carbon per btu, which in turn affects the quantity of CO_2 emissions generated per unit of heat input. Selecting low carbon fuels is a viable method of reducing GHG emissions.
- CO_2 Capture and Storage – Capture and compression, transport, and geologic storage of the CO_2.

A RACT/BACT/LAER Clearinghouse (RBLC) search was also conducted in an attempt to identify BACT options that have been implemented or proposed for other similar gas fired combustion facilities. The results of this search are presented in Appendix B. No additional technologies were identified. The control methods identified in the search were limited to the first three options listed above (tune-ups, good design, and god combustion control and

US EPA ARCHIVE DOCUMENT

operation). Information from *Energy Efficiency Improvement and Cost Saving Opportunities for the Petrochemical Industry: An ENERGY STAR Guide for Energy Plant Managers* (Environmental Energy Technologies Division, University of California, sponsored by USEPA, June 2008) was also used in the preparation of this analysis.

6.1.2 Step 2 – Elimination of Technically Infeasible Alternatives

All options identified in Step 1 are considered technically feasible; however, waste heat recovery is not considered to be a practical alternative for the proposed heaters. The Hot Oil Heaters, although of a size sufficient enough to consider use of waste heat recovery, are designed to maximize heat transfer to the oil medium, with a resulting low exhaust gas temperature (393 ^{o}F) that does not contain sufficient residual heat to allow effective heat recovery. For example, use of flue gas heat recovery to preheat the heater combustion air is typically only considered practical if the exhaust gas temperature is higher than 650 ^{o}F (*Energy Efficiency Improvement and Cost Saving Opportunities for the Petrochemical Industry: An ENERGY STAR Guide for Energy Plant Managers* (Environmental Energy Technologies Division, University of California, sponsored by USEPA, June 2008)). A more practical alternative to reduce heater demand in the proposed process is the use of heat exchangers throughout the process to utilize the heat from product streams to preheat feed streams to the various process units (See Figure 4-1 in the Process Description). This practice also reduces the energy required in the units used to cool the product streams. A portion of this energy reduction is in the form of purchased electricity. While this does not directly affect emissions from the heaters, a reduction in purchased electricity reduces the amount of GHG emissions produced from the combustion of coal or natural gas at the power plant where the electricity is produced. An alternative to purchasing power produced at a larger more efficient power plant is to install smaller, less efficient power generating facilities at the Mont Belvieu plant. Thus, the plant design to purchase electricity and minimize electricity and other energy needs through the use of heat exchangers is a more effective method of minimizing GHG emissions through heat recovery than recovery of the small amount of residual heat in the Hot Oil Heater exhausts. The Regenerant Heaters cannot be used effectively for waste heat recovery, as they are on/off cycled heater (design is firing about 8 hrs, and shut down for about 24 to 30 hrs). For these reasons, use of waste heat recovery on the heaters was eliminated from further consideration.

Carbon capture and sequestration (CCS) is not considered to be a viable alternative for controlling GHG emissions from natural gas fired facilities. However, for completeness, this

US EPA ARCHIVE DOCUMENT

control option is included in the remainder of this analysis, and the reasons that it is not considered viable are discussed in Section 6.1.4.

6.1.3 Step 3 – Ranking of Remaining Technologies Based on Effectiveness

The remaining technologies applicable to the proposed heater design in order of most effective to least effective include:

- Use of low carbon fuels (up to 100% for fuels containing no carbon),
- CO_2 capture and storage (up to 90%),
- Heater Design (up to 10%),
- Air/Fuel Control (5 - 25%),
- Periodic tune-up (up to 10% for boilers; information not found for heaters), and
- Product Heat Recovery (does not directly improve heater efficiency).

Virtually all GHG emissions from fuel combustion result from the conversion of the carbon in the fuel to CO_2. Fuels used in industrial process and power generation typically include coal, fuel oil, natural gas, and process fuel gas. Of these, natural gas is typically the lowest carbon fuel that can be burned, with a CO_2 emission factor in lb/mmbtu about 55% of that of subbituminous coal. Process fuel gas is a byproduct of chemical process, that typically contains a higher fraction of longer chain carbon compounds than natural gas and thus results in more CO_2 emissios. Table C-2 in 40 CFR Part 98 Subpart C, which contains CO_2 emission factors for a variety of fuels, gives a CO_2 factor of 59 kg/MMBtu for fuel gas compared to 53.02 kg/MMBtu for natural gas. Of over 50 fuels identified in Table C-2, coke oven gas, with a CO_2 factor of 46.85 kg/MMBtu, is the only fuel with a lower CO_2 factor than natural gas, and is not viable fuel for the proposed heaters as the Mount Belvieu Complex does not contain coke ovens. Although Table C-2 includes a typical CO_2 factor of 59 kg/MMBtu for fuel gas, fuel gas composition is highly dependent on the process from which the gas is produced. Some processes produce significant quantities of hydrogen, which procuces no CO_2 emissions when burned. Thus, use of a completely carbon-free fuel such as 100% hydrogen, has the potential of reducing CO_2 emissions by 100%. Hydrogen fuel, in any concentration, is not a readily available fuel for most industrial facilities and is only a viable low carbon fuel at industrial plants that generate hydrogen internally. Hydrogen is not produced from the processes at the Mont Belvieu Complex, and is therefore not a viable fuel. Natural gas is the lowest carbon fuel available for use in the proposed heaters.

US EPA ARCHIVE DOCUMENT

CO_2 capture and storage is capable of achieving 90% reduction of produced CO_2 emissions and thus is considered to be the most effective control method. Good heater design, air/fuel ratio control, and periodic tune-ups are all considered effecitive and have a range of efficiency improvements which cannot be directly quantitifed; therefore, the above ranking is approximate only. The estimated efficiencies were obtained from *Energy Efficiency Improvement and Cost Saving Opportunities for the Petrochemical Industry: An ENERGY STAR Guide for Energy Plant Managers* (Environmental Energy Technologies Division, University of California, sponsored by USEPA, June 2008). This report addressed improvements to existing energy systems as well as new equipment; thus, the higher end of the range of stated efficiency improvements that can be realised is assumed to apply to the existing (older) facilities, with the lower end of the range being more applicable to new heater designs. Product heat recovery involves the use of heat exchangers to transfer the excess heat that may be contained in product streams to feed streams. Pre-heating of feed streams in this manner reduces the heat requirement of the downstream process unit (e.g., a distillation column) which reduces the heat required from process heaters. Where the product streams require cooling, this practice also reduces the energy required to cool the product stream.

6.1.4 Step 4 – Evaluation of Control Technologies in Order of Most Effective to Least Effective

Carbon Capture and Sequestration. As stated in Section 6.1.2, carbon capture and sequestration (CCS) is not considered to be a viable alternative for controlling GHG emissions from natural gas fired facilities. This conclusion is supported by the BACT example for a natural gas fired boiler in Appendix F of EPA's *PSD and Title V Permitting Guidance for Greenhouse Gases* (November 2010). In the EPA example, CCS is not even identified as an available control option for natural gas fired facilities. Also, on pages 33 and 44 of the Guidance Document, it states:

"For the purposes of a BACT analysis for GHGs, EPA classifies CCS as an add-on pollution control technology that is available for large CO_2-emitting facilities including fossil fuel-fired power plants and industrial facilities with high-purity CO_2 streams (e.g., hydrogen production, ammonia production, natural gas processing, ethanol production, ethylene oxide production, cement production, and iron and steel manufacturing). For these types of facilities, CCS should be listed in Step 1 of a top-down BACT analysis for GHGs." The CO_2 streams included in this permit application are similar in nature to the gas-fired industrial boiler in the EPA Guidance Appendix F example and are dilute streams, and thus are not among the facility types for which the EPA guidance states CCS

US EPA ARCHIVE DOCUMENT

should be listed in Step 1. Although the proposed facility is not one of the listed facility types for which CCS should be considered, it was further evaluated for the project to ensure that the analysis was complete.

A project implementing CCS was in the permitting stage at the time of this application submittal. This project is the Indiana Gasification Project, and it differs from Enterprise's project in several significant ways. The project will gasify coal, producing significantly more CO_2 than the Eneterprise project, with the primary product being substitute natural gas (SNG), which is primarily methane. When coal is gasified, the product is a mixture consisting primarily of CO, CO_2, and H_2. Then, in the SNG process, a series of reactions converts the CO and H_2 to methane. To meet pipeline specifications, the CO_2 must be removed from the SNG, which produces a relatively pure CO_2 stream that is naturally ready for sequestration. Combustion of natural gas, as is proposed by Enterprise, produces an exhaust stream that is roughly 10% CO_2, which is far from pure. Thus, while the Indiana Gasification project will naturally produce a CO_2 byproduct that is amenable to sequestration or use in enhanced oil recovery without further processing, combustion of natural gas in a heater does not. Separation (purification) of the CO_2 from the heater combustion exhaust streams would require additional costly steps not otherwise necessary to the process. In fact, the SNG that will be produced by the Indiana Gasification Project, if built, will by used as fuel by residential and commercial customers, and when burned will release the same amount of CO_2 per btu to the atmosphere as the proposed heaters. Coal has a much higher carbon content than natural gas, and the captured carbon from the Indiana Gasification Project only represents the delta between natural gas and coal. Thus, while that project may reduce GHG emissions compared to conventional methods of obtaining energy from coal, it results in no GHG emissions reduction relative to use of natural gas fuel as proposed for the Enterprise heaters.

As a final point, the viability of the Indiana Gasification Project is highly dependent on a 30-year contract requiring the State of Indiana to purchase the SNG produced and federal loan guarantees should the plant fail. In contrast, the BFLP project relies on market conditions for viability and is not guaranteed by the government.

Regardless of these differences, for completeness purposes, Enterprise has performed an order of magnitude cost analysis for CCS applied to the heaters addressed in this permit application. The results of the analysis, presented in Table 6-1, show that the cost of CCS for the project would be approximately $104 per ton of CO_2 controlled, which is not considered to be cost effective for GHG control. This equates to a total cost of about $16,400,000 per year the four heaters. The best

US EPA ARCHIVE DOCUMENT

estimate of the total capital cost of the two proposed fractionation units is $500,000,000. Based on a 7% interest rate, and 20 year equipment life, this cost equates to an annualized cost of about $47,200,000. Thus the annualized cost of CCS would be at least 33% of this cost; which far exceeds the threshold that would make CCS economically viable for the project.

There are additional negative impacts associated with use of CCS for the proposed heaters. The additional process equipment required to separate, cool, and compress the CO_2 would require a significant additional power and energy expenditure. This equipment would include amine units, cryogenic units, dehydration units, and compression facilities. The power and energy must be provided from additional combustion units, including heaters, engines, and/or combustion turbines. Electric driven compressors could be used to partially eliminate additional emissions from the Mont Belvieu Complex, but significant additional GHG emissions, as well as additional criteria pollutant (NO_x, CO, VOC, PM, SO_2) emissions, would occur from the associated power plant that produces the electricity. The additional GHG emissions resulting from additional fuel combustion would either further increase the cost of the CCS system if the emissions were also captured for sequestration or reduce the net amount GHG emission reduction, making CCS even less cost effective than shown in Table 6-1.

Based on both the excessive cost effectiveness in $/ton of GHG emissions controlled and the inability of the project to bear the high cost and the associated negative environmental and energy impacts, CCS is rejected as a control option for the proposed project.

Heater Design. New heaters can be designed with efficient burners, more efficient heat transfer efficiency to the hot oil and regeneration streams, state-of-the-art refractory and insulation materials in the heater walls, floor, and other surfaces to minimize heat loss and increase overall thermal efficiency. The function and near steady state operation of the Hot Oil Heaters allows them to be designed to achieve “near best” thermal efficiency. The Regenerant Heaters will be in cyclic service that spans a 24 to 36 hour period. During this period, the heater heats up from cold or standby/pilots only (~0.4 MMBtu/hr) to the design case. Following this, over the operating cycle (~10 hrs) the heaters transition to the running case. To meet the CO and NO_x emission requirements which are dependent on the flue gas temperature for both the cases, the heaters have to be designed with a high heat flux/radiant section flue gas temperature at the design case which drives stack temperature up. With a very low inlet temperature at the design case, the efficiency is lower than typically expected since heat recovery is hampered due to design for significantly different operating cases.

US EPA ARCHIVE DOCUMENT

Air/Fuel Controls. Some amount of excess air is required to ensure complete fuel combustion, minimize emissions, and for safety reasons. More excess air than needed to achieve these objectives reduces overall heater efficiency. Manual or automated air/fuel ratio controls is used to optimizes these parameters and maximize the efficiency of the combustion process. Automated controls are considered more effective than manual controls.

Periodic Heater Tune-ups. Periodic tune-ups of the heaters include:

- Preventive maintenance check of fuel gas flow meters annually,
- Preventive maintenance check of oxygen control analyzers quarterly,
- Cleaning of burner tips on an as-needed basis, and
- Cleaning of convection section tubes on an as-needed basis.

These activities insure maximum thermal efficiency is maintained; however, it is not possible to quantify an efficiency improvement, although convection cleaning has shown improvements in the 0.5 to 1.5% range.

Product Heat Recovery. Rather than increasing heater efficiency, this technology reduces potential GHG emissions by reducing the required heater duty (fuel firing rate), which can substantially reduce overall plant energy requirements.

Use of Low Carbon (Natural Gas) Fuel. Natural gas I the lowest carbon fuel available for use in the proposed heaters. Natural gas is readily available at the Mont Belvieu Complex and is currently considered a very cost effective fuel alternative. Natural gas is also a very clean burning fuel with respect to criteria pollutants and thus has minimal environmental impact compared to other fuels. Natural gas is the fuel of choice for most industrial facilities, especially natural gas processing facilities, in addition to being the lowest carbon fuel available. Although use of natural gas as fuel results in about 28% less CO_2 emissions than diesel fuel and 45% less CO_2 emissions than subbituminous coal; it is more prudent to consider natural gas to be the "baseline" fuel for this BACT analysis; thus, claiming an emission reduction from its use would be a misrepresentation.

6.1.5 Step 5 – Selection of BACT

Air/fuel controls and efficient heater design, and tune-ups performed as needed are currently utilized on the existing heaters at the Mont Belvieu Complex to maximize efficiency and thus reduce GHG emissions. These control practices are also included in the design of the new

US EPA ARCHIVE DOCUMENT

heaters and are thus part of the selected BACT. These technologites and additional BACT practices proposed for the heaters are listed below:

- Use of low carbon fuel (natural gas). Natural gas will be the only fuel fired in the proposed heaters. It is the lowest carbon fuel available for use at the complex.
- Determine CO_2e emissions from the Hot Oil and Regenerant Heaters based on metered fuel consumption and standard emission factors and/or fuel composition and mass balance.
- Good heater design to maximize heat transfer efficiency to the hot oil and regeneration streams and reduce heat loss. Ceramic fiber blankets and Kaolite™ of various thickness and density will be used where feasible on all heater surfaces. Kaolite™ is a super light low thermal conductivity insulation material consisting of vermiculite and Portland cement that reduces heat transfer producing significant savings in furnace fuel consumption.
- Based on the design conditions and the "process inlet to exit flue gas" approach temperature, the Hot Oil Heaters will be designed and operated to near-best efficiency while maintaining emissions limits. Any further design changes would result in a minimal incremental change in efficiency and has been analyzed as being non cost-effective. An approach temperature of 100°F is typical design practice when using carbon steel tubes and furthermore the stack temperature must be high enough to avoid the acid gas dew point of the flue gas. This typically results in a stack temperature no less than 325°F-350°F, thus dictating efficiency for the heater.
- Demonstrate Hot Oil Heater efficiencies by monitoring the exhaust temperature, fuel temperature, ambient temperature, and excess oxygen. Thermal efficiency will be calculated for each operating hour from these paramaters using accepted API methods. An efficiency of 85% will be maintained on a 12-month rolling average basis, excluding malfunction and maintenance periods.
- The Regenerant Heaters will be designed and operated to achieve the maximum possible thermal efficiency considering their cyclic service.
- Install, utilize, and maintain an automated air/fuel control system to maximize combustion efficiency on the Hot Oil Heaters.
- Install, utilize, and maintain an O_2 analyzer on the Regenerant Heaters to allow manual adjustment of the air dampers to control the air/fuel to maximize combustion efficiency.
- Clean heater burner tips and convection tubes as needed.
- Calibrate and perform preventive maintenance on the fuel flow meter once per year and air/fuel control analyzers once per quarter.
- Excess heat in product streams will be used to pre-heat feed streams throughout the process through the use of heat exchangers to transfer the heat from the product stream to the feed stream. This will also reduce the energy requirement (primarily purchased electricity) needed to cool the product streams. Figure 4-1 in Section 4 of this permit application idenfities points in the process where this technology will be used.

US EPA ARCHIVE DOCUMENT

6.2 Flare

GHG emissions, primarily CO_2, are generated from the combustion of waste gas streams from the proposed units and assist natural gas used to maintain the required minimum heating value to achieve adequate destruction.

6.2.1 Step 1 – Identification of Potential Control Technologies

The only viable control option for reducing GHG emissions from flaring is minimizing the quantity of flared waste gas and natural gas to the extent possible. The technically viable options for achieving this include:

- Flaring minimization – minimize the duration and quantity of flaring to the extent possible through good engineering design of the process and good operating practice.
- Proper operation of the flare – use of flow and composition monitors to accurately determine the optimum amount of natural gas required to maintain adequate VOC destruction in order to minimize natural gas combustion and the resulting CO_2.
- Use of a thermal oxidizer in lieu of a flare.
- Use of a vapor recovery unit in lieu of a flare.

6.2.2 Step 2 – Elimination of Technically Infeasible Alternatives

Both flaring minimization and proper operation of the flare are considered technically feasible.

One of the primary reasons that a flare is consider for control of VOC in the process vent streams is that it can also be used for emergency releases. Although every possible effort is made to prevent such releases, they can occur, and the design must allow for them. A thermal oxidizer is not capable of handling the sudden large volumes of vapor that could occur during an upset release. A thermal oxidizer would also not result in a significant difference in GHG emissions compared to a flare. The same constraints exist with a vapor recovery unit. For this reason, even if a thermal oxidizer or vapor recovery unit was used for control of routine vent streams, the flare would still be necessary and would require continuous burning of natural gas in the pilots, which add additional CO_2, NO_x, and CO emissions.

A vapor recovery unit is not considered technically feasible for the amine regeneration stream, as it is not well suited to low levels of hydrocarbon in a large inert stream. A vapor recovery unit

US EPA ARCHIVE DOCUMENT

would require a chiller to condense the VOC in the stream. The stream contains significant amounts of CO_2 and water that would condense and cause icing of the equipment.

For these reasons, use of either a thermal oxidizer or vapor recovery unit are rejected as technically infeasible for the proposed project.

6.2.3 Step 3 – Ranking of Remaining Technologies Based on Effectiveness

Flare minimization and proper operation of the flare are potentially equally effective but have case-by-case effectiveness that cannot be quantified to allow ranking.

6.2.4 Step 4 – Evaluation of Control Technologies in Order of Most Effective to Least Effective

Use of an analyzer(s) to determine the heating value of the flare gas to allow continuous determination of the amount of natural gas needed to maintain a minimum heating value of 300 Btu/scf to insure proper destruction of VOCs ensures that excess natural gas is not unnecessarily flared. This added advantage of reducing fuel costs makes this control option cost effective as both a criteria pollutant and GHG emission control option. There are no negative environmental impacts associated with this option. Proper design of the process equipment to minimize the quantity of waste gas sent to the flare also has no negative economic or environmental impacts.

6.2.5 Step 5 – Selection of BACT

Enterprise proposes use of both identified control options to minimize GHG emissions from flaring of process vents from the proposed facilities. Flare system analyzers will be used to continuously monitor the combined waste gas stream sent to the flare from the proposed and other existing facilities to determine the quantity of natural gas required to maintain a minimum heating value of 300 Btu/scf and also to limit the quantity of natural gas use only what is needed to maintain 300 Btu/scf. The efficient use of natural gas will avoid the production of both unnecessary GHG emissions as well as criteria pollutants. The proposed process facilities will be designed to minimize the volume of the vent stream from the Regeneration Reflux Drum, which is the primary source of waste gas sent to the flare.

US EPA ARCHIVE DOCUMENT

6.3 Process Fugitives (EPNs FRAC F EFa,b)

Hydrocarbon emissions from leaking piping components (process fugitives) associated with the proposed project include methane, a GHG. The additional methane emissions from processes fugitives have been conservatively estimated to be 22 tpy as CO_2e. This is a negligible contribution to the total GHG emissions; however, for completeness, they are addressed in this BACT analysis.

6.3.1 Step 1 – Identification of Potential Control Technologies

The only identified control technology for process fugitive emissions of CO_2e is use of a leak detection and repair (LDAR) program. LDAR programs vary in stringency as needed for control of VOC emissions; however, due to the negligible amount of GHG emissions from fugitives, LDAR programs would not be considered for control of GHG emissions alone. As such, evaluating the relative effectiveness of different LDAR programs is not warranted.

6.3.2 Step 2 – Elimination of Technically Infeasible Alternatives

LDAR programs are a technically feasible option for controlling process fugitive GHG emissions.

6.3.3 Step 3 – Ranking of Remaining Technologies Based on Effectiveness

As stated in Step 1, this evaluation does not compare the effectiveness of different levels of LDAR programs.

6.3.4 Step 4 – Evaluation of Control Technologies in Order of Most Effective to Least Effective

Although technically feasible, use of an LDAR program to control the negligible amount of GHG emissions that occur as process fugitives is clearly cost prohibitive. However, if an LDAR program is being implemented for VOC control purposes, it will also result in effective control of the small amount of GHG emissions from the same piping components. Enterprise uses TCEQ's 28LAER LDAR program at the Mont Belvieu Complex to minimize process fugitive VOC emissions at the plant, and this program has also been proposed for the additional fugitive VOC emissions associated with the project. 28LAER is TCEQ's most stringent LDAR program, developed to satisfy LAER requirements in ozone non-attainment areas.

US EPA ARCHIVE DOCUMENT

6.3.5 Step 5 – Selection of BACT

Due to the negligible amount of GHG emissions from process fugitives, the only available control, implementation of an LDAR program, is clearly not cost effective, and BACT is determined to be no control. However, Enterprise will implement TCEQ's 28LAER LDAR program for VOC BACT purposes, which will also effectively minimize GHG emissions. Therefore, the proposed VOC LDAR program more than satisfies GHG BACT requirements.

US EPA ARCHIVE DOCUMENT

Table 6-1. Approximate Cost for Construction and Operation of a Post-Combustion Carbon Capture and Sequestration (CCS) System for GHG Emissions Control for the Enterprise Eagleford Frac and DIB Units Project

CCS System Component	Cost ($/ton of CO_2 Controlled)[1]	Tons of CO_2 Controlled per Year[2]	Total Annual Cost
CO_2 Capture and Compression Facilities	$103	158,274	$16,302,249
CO_2 Transport Facilities (per 100 km of pipeline)[3]	$0.91	158,274	$14,403
CO_2 Storage Facilities	$0.51	158,274	$80,720
Total CCS System Cost	$104	NA	$16,397,371

Proposed Plant Cost	Total Capital Cost	Capital Recovery Factor[4]	Annualized Capital Cost
Cost of Frac Plants without CCS[5]	$500,000,000	0.0944	$47,196,463

1. Costs are from *Report of the Interagency Task Force on Carbon Capture (August, 2010)* . A range of costs was provided for transport and storage facilities; for conservatism, the low ends of these ranges were used in this analysis as they contribute little to the total cost. Reported costs in $/tonne were converted to $/ton.

2. Tons of CO_2 controlled assumes 90% capture of all CO_2 emissions from 2 Hot Oil Heaters and 2 Regenerant Heaters.

3. Pipeline costs are per 100 km of pipeline. It is conservatively assumed that a suitable storage location can be found within 10 km, which reduces the total cost for this component of the CCS system to a negligible amount.

4. Capital recovery factor based on 7% interest rate and 20 year equipment life.

5. Capital cost does not include DIB as this process unit does not contribute to GHG emissions that are considered for CCS control.

US EPA ARCHIVE DOCUMENT

Appendix A

Emissions Calculations

US EPA ARCHIVE DOCUMENT

US EPA ARCHIVE DOCUMENT

Enterprise Operating Products LLC
Mont Belvieu Complex - Eagleford Frac and DIB
GHG Emissions

FIN	EPN	Description	Flow Rate (MMBtu/yr)	Flow Rate (Fuel) (scf/yr)	Carbon Content (CC)	MW (lb/lbmol)	CO2 Emissions (tpy)*	CH4 Emissions (tpy)*	N2O Emissions (tpy)*	CO2e Emissions (tpy)*
HR15.001A	HR15.001A	Hot Oil Heater	1,226,400	1,200,774,774	0.717	17.56	72,987	1.35	0.14	73,058
HR15.001B	HR15.001B	Hot Oil Heater	1,226,400	1,200,774,774	0.717	17.56	72,987	1.35	0.14	73,058
HR15.002A	HR15.002A	Regenerant Heater	249,660	244,443,436	0.717	17.56	14,858	0.28	0.03	14,872
HR15.002B	HR15.002B	Regenerant Heater	249,660	244,443,436	0.717	17.56	14,858	0.28	0.03	14,872
FRAC F EFa	FRAC F EFa	Fugitives					-	0.53	-	11
FRAC F EFb	FRAC F EFb	Fugitives					-	0.53	-	11
SK25.001	SK25.001	Flare								-
		Nat Gas	283,965	278,031,548	0.717	17.56	16,900	0.31	0.03	16,916
		FRAC Process Gas	88,721	697,646,400	0.193	28.93	18,817	0.29	0.06	18,841
		DIB Process Gas	8,586	2,863,907	0.826	58.06	663	0.03	0.01	666
		Ethane (MSS)	823	468,406	0.798	30.07	54	0.003	0.001	55
		Propane (MSS)	892	357,462	0.817	44.09	62	0.003	0.001	62
		Butane (MSS)	364	112,361	0.826	58.12	26	0.001	0.0002	26
		Pentane (MSS)	13,873	3,595,900	0.832	72.15	1,042	0.05	0.01	1,046
						Total:	**213,256**	**4.99**	**0.43**	**213,494**
						CO2e:	**213,256**	**104.86**	**133.80**	

* Note all emission rates are in units of short tons. Eq. C-5 in 40 CFR Part 98 Chapter C yields emissions in metric tons.
Metric tons were converted to short tons by multiplying by 1.102311 short tons per metric ton.

Operating Schedule:	8760	hr/yr
Natural Gas Heating Value:	1021	Btu/scf (hhv)
Frac Process Gas Heating Value:	127	Btu/scf (hhv)
DIB Process Gas Heating Value:	2998	Btu/scf (hhv)

Emission Factors:

Eq. C-5 from 40 CFR Part 98 Chapter C

$$CO_2 = \frac{44}{12} * Fuel * CC * \frac{MW}{MVC} * 0.001 \qquad \text{(Eq. C-5)}$$

CO2 =	CO2 emissions, metric tons/yr
Fuel =	firing rate in mmscf/yr
MVC =	836.6 (per Part 98)
CC =	as calculated below
MW =	as calculated below

CH4 and N2O Emission factors from Table C-2 of Appendix A to 40 CFR Part 98 Chapter C

	kg CH4 /mmBtu	kg N2O/mmBtu
Natural Gas	0.001	0.0001
Process Gas	0.003	0.0006
kg to lb conversion factor:		2.20462

CO2 Equivalents:

CO2	1.0
CH4	21.0
N2O	310.0

FRAC Process Gas

Component	Molecular Weight (lb/lb-mol)	Natural Gas Composition (mole %)	Process Gas Composition (mole %)	Number of Carbons
H_2	2.000	0.0000		0
N_2	28.013	1.3645		0
O_2	31.999	0.2324		0
CO	28.010	0.0124		1
CO_2	44.01	1.4665	40.30	1
H2O	18.02	0.0000	56.99	0
Methane	16.04	92.9606	0.04	1
Ethane	30.07	2.6126	2.02	2
Propane	44.09	0.6918	0.59	3
i-Butane	58.12	0.1946	0.00	4
n-Butane	58.12	0.1751	0.01	4
i-Pentane	72.15	0.0662	0.00	5
n-Pentane	72.15	0.0448	0.00	5
Hexane+	86.17	0.1785	0.05	6
	MW (lb/lbmole):	17.56	28.93	
	Carbon Content (kg C/kg Fuel):	0.717	0.193	

DIB Process Gas

Component	Molecular Weight (lb/lb-mol)	Process Gas Composition	Number of Carbons
Propane	44.09	0.43	3
i-Butane	58.12	98.30	4
n-Butane	58.12	1.27	4
	MW (lb/lbmole):	58.06	
	Carbon Content (kg C/kg Fuel):	0.826	

US EPA ARCHIVE DOCUMENT

Enterprise Products Operating LLC
Mont Belvieu Complex - Eagleford Frac
GHG Fugitive Emissions Calculations (EPNs FRAC F EFa,b)

FACILITY NAME: Enterprise Products, Eagleford Frac Project, Mont Belvieu, Texas
AREA: Area 02126 - ISBL
COMPOSITION: Total VOC: Less Methane, Ethane & Inerts

FIN: **FRAC F EFa**
EPN: **FRAC F EFa**

METHODOLOGY USED: SOCMI w/o Ethylene
CONTROL EFFICIENCY: 28LAER w/ flanges monitored as valves

COMPONENT	As-Built COMP. COUNT	HOURS SERVICE (hrs)	CH4 PERCENT (%)	EMISSION FACTOR (lb/hr-comp.)	PERCENT REDUCTION (%)	EMISSIONS (ton/yr)
VALVES						
GAS/VAPOR	636	8760	0	0.0089	97	0.00
GAS/VAPOR (Fuel Gas)	268	8760	98	0.0089	97	0.31
LIGHT LIQUID	1286	8760	0	0.0035	97	0.00
LIGHT LIQUID	539	8760	25	0.0035	97	0.06
HEAVY LIQUID	0	8760	0	0.0070	30	0.00
PUMPS						
DOUBLE MECH. SEAL	9	8760	0	0.0386	100	0.00
LIGHT LIQUID	0	8760	0	0.0386	93	0.00
HEAVY LIQUID	0	8760	0	0.0161	0	0.00
FLANGES						
GAS/VAPOR	460	8760	0	0.0029	97	0.00
GAS/VAPOR (Fuel Gas)	349	8760	98	0.0029	97	0.13
LIGHT LIQUID	3130	8760	0	0.0005	97	0.00
LIGHT LIQUID (Y-Grade)	1600	8760	25	0.0005	97	0.03
HEAVY LIQUID	0	8760	0	0.00007	0	0.00
OPEN-ENDED LINES	1444	8760	0	0.004	100	0.00
RELIEF VALVES w/RD	39	8760	0	0.2293	100	0.00
COMPRESSORS	2	8760	0	0.5027	100	0.00
SAMPLE CONNECTIONS	0	8760	0	0.033	97	0.00
OTHER	300	8760	0	0.000265	97	0.00
					TOTAL	**0.53**

FIN: **FRAC F EFb**
EPN: **FRAC F EFb**

METHODOLOGY USED: SOCMI w/o Ethylene
CONTROL EFFICIENCY: 28LAER w/ flanges monitored as valves

COMPONENT	As-Built COMP. COUNT	HOURS SERVICE (hrs)	VOC PERCENT (%)	EMISSION FACTOR (lb/hr-comp.)	PERCENT REDUCTION (%)	(ton/yr)
VALVES						
GAS/VAPOR	636	8760	0	0.0089	97	0.00
GAS/VAPOR (Fuel Gas)	268	8760	98	0.0089	97	0.31
LIGHT LIQUID	1286	8760	0	0.0035	97	0.00
LIGHT LIQUID	539	8760	25	0.0035	97	0.06
HEAVY LIQUID	0	8760	0	0.0070	30	0.00
PUMPS						
DOUBLE MECH. SEAL	9	8760	0	0.0386	100	0.00
LIGHT LIQUID	0	8760	0	0.0386	93	0.00
HEAVY LIQUID	0	8760	0	0.0161	0	0.00
FLANGES						
GAS/VAPOR	460	8760	0	0.0029	97	0.00
GAS/VAPOR (Fuel Gas)	349	8760	98	0.0029	97	0.13
LIGHT LIQUID	3130	8760	0	0.0005	97	0.00
LIGHT LIQUID (Y-Grade)	1600	8760	25	0.0005	97	0.03
HEAVY LIQUID	0	8760	0	0.00007	0	0.00
OPEN-ENDED LINES	1444	8760	0	0.004	100	0.00
RELIEF VALVES w/RD	39	8760	0	0.2293	100	0.00
COMPRESSORS	2	8760	0	0.5027	100	0.00
SAMPLE CONNECTIONS	0	8760	0	0.033	97	0.00
OTHER	300	8760	0	0.000265	97	0.00
					TOTAL	**0.53**

Note: Flanges will be monitored at the same leak definition as valves, so the valve credit will be used for flanges.
(1) All pumps are Dual Mechanical Seal
(2) Flange category is comprised of flanges and screwed connectors.
(3) There are 10 Sample Stations w/ regulated product. All components are less than 1/2", containing 40 points apiece.

Appendix B

RBLC Database Search Results

US EPA ARCHIVE DOCUMENT

US EPA ARCHIVE DOCUMENT

RBLC Database Search Results for GHG Emissions from Heaters and Boilers

RBLCID	Facility Name	Corporate or Company Name	Facility State	Permit Issuance Date	Process Name	Primary Fuel	Thruput	Thruput Units	Pollutant	Control Method Description	Emission Limit 1	Emission Limit 1 Units
AL-0231	NUCOR DECATUR LLC	NUCOR CORPORATION	AL	06/12/2007 ACT	VACUUM DEGASSER BOILER	NATURAL GAS	95	MMBTU/H	Carbon Dioxide		0.061	LB/MMBTU
*FL-0330	PORT DOLPHIN ENERGY LLC		FL	12/01/2011 ACT	Boilers (4 - 278 mmbtu/hr each)	natural gas	0		Carbon Dioxide	tuning, optimization, instrumentation and controls, insulation, and turbulent flow.	117	LB/MMBTU
LA-0248	DIRECT REDUCTION IRON PLANT	CONSOLIDATED ENVIRONMENTAL MANAGEMENT INC - NUCOR	LA	01/27/2011 ACT	DRI-108 - DRI Unit #1 Reformer Main Flue Stack	Iron Ore and Natural Gas	12168	Billion Btu/yr	Carbon Dioxide	the best available technology for controlling CO2e emissions from the DRI Reformer is good combustion practices, the Acid gas separation system, and Energy integration. BACT shall be good combustion practices, which will be adhered to maintain low levels of fuel consumption by the LNB burners.	11.79	MMBTU/TON OF DRI
LA-0248	DIRECT REDUCTION IRON PLANT	CONSOLIDATED ENVIRONMENTAL MANAGEMENT INC - NUCOR	LA	01/27/2011 ACT	DRI-208 - DRI Unit #2 Reformer Main Flue Stack	Iron ore and Natural Gas	12168	Billion Btu/yr	Carbon Dioxide	the best available technology for controlling CO2e emissions from the DRI Reformer is good combustion practices, the Acid gas separation system, and Energy integration. BACT shall be good combustion practices, which will be adhered to maintain low levels of fuel consumption by the LNB burners.	11.79	MMBTU/TON OF DRI
LA-0254	NINEMILE POINT ELECTRIC GENERATING PLANT	ENTERGY LOUISIANA LLC	LA	08/16/2011 ACT	AUXILIARY BOILER (AUX-1)	NATURAL GAS	338	MMBTU/H	Carbon Dioxide	PROPER OPERATION AND GOOD COMBUSTION PRACTICES	117	LB/MMBTU

RBLCID	Facility Name	Corporate or Company Name	Facility State	Permit Issuance Date	Process Name	Primary Fuel	Thruput	Thruput Units	Pollutant	Control Method Description	Emission Limit 1	Emission Limit 1 Units
LA-0254	NINEMILE POINT ELECTRIC GENERATING PLANT	ENTERGY LOUISIANA LLC	LA	08/16/2011 ACT	AUXILIARY BOILER (AUX-1)	NATURAL GAS	338	MMBTU/H	Methane	PROPER OPERATION AND GOOD COMBUSTION PRACTICES	0.0022	LB/MMBTU

RBLCID	Facility Name	Corporate or Company Name	Facility State	Permit Issuance Date	Process Name	Primary Fuel	Thruput	Thruput Units	Pollutant	Control Method Description	Emission Limit 1	Emission Limit 1 Units
LA-0254	NINEMILE POINT ELECTRIC GENERATING PLANT	ENTERGY LOUISIANA LLC	LA	08/16/2011 ACT	AUXILIARY BOILER (AUX-1)	NATURAL GAS	338	MMBTU/H	Nitrous Oxide (N2O)	PROPER OPERATION AND GOOD COMBUSTION PRACTICES	0.0002	LB/MMBTU

Appendix C

Copy of TCEQ Air Permit Application

US EPA ARCHIVE DOCUMENT

14450 JFK Blvd., Suite 400, Houston, Texas 77032, USA
T +1 713 330 8500 **F** +1 281 987 3500 **W** www.rpsgroup.com

Application for TCEQ Air Permit

Enterprise Mont Belvieu Complex
Eagleford Fractionation and DIB Units

Submitted by

Enterprise Products Operating LLC
P.O. Box 4324
Houston, Texas 77210-4324

RPS
(TBPE No. 1298)

December 2011

Revised May 2012

US EPA ARCHIVE DOCUMENT

Table of Contents

List of Sections

Section 1 Introduction....1-1
Section 2 TCEQ Forms and Application Fee....2-1
Section 3 Area Map and Plot Plan....3-1
Section 4 Project and Process Description....4-1
4.1 Fractionation Units....4-1
4.2 Deisobutanizer Unit....4-2
Section 5 Emission Rate Basis....5-1
5.1 Heaters....5-1
5.2 Cooling Towers....5-1
5.3 Process Fugitive Emissions....5-2
5.4 Tank Emissions....5-2
5.5 Flare Emissions....5-3
Section 6 BACT and LAER Analyses....6-1
6.1 Heaters....6-2
6.1.1 NO_x....6-2
6.1.2 CO....6-2
6.1.3 $PM/PM_{10}/PM_{2.5}$....6-3
6.1.4 VOC....6-4
6.1.5 SO_2....6-4
6.2 Cooling Towers....6-5
6.3 Process Fugitives....6-5
6.4 Tanks....6-6
6.5 Flare....6-6
6.5.1 SO_2....6-6
6.5.2 CO....6-6
6.5.3 NO_x....6-7
6.5.4 VOC....6-8
Section 7 Federal NSR Applicability....7-1
7.1 Step 1: Determine Project Emissions Increases....7-1
7.2 Step 2: Determine Net Emissions Increases....7-2
Section 8 General Application Requirements....8-1

List of Tables

Table 1(a)....5-4
Table 1F....7-3
Table 2F – VOC....7-4
Table 3F – VOC....7-5
Table 2F – NO_x....7-8
Table 3F – NO_x....7-9
Table 2F – CO....7-11
Table 3F – CO....7-11
Table 2F – PM....7-14
Table 2F – SO_2....7-15

US EPA ARCHIVE DOCUMENT

Table of Contents *(continued)*

List of Figures

Figure 3-1 Area Map 3-2
Figure 3-2 Enterprise Mont Belvieu Plot Plan 3-3
Figure 4-1 Simplified Process Flow Diagram – Frac Units 4-4
Figure 4-2 Simplified Process Flow Diagram - DIB Unit 4-5

List of Appendices

Appendix A Material Balance
Appendix B Emissions Calculations
Appendix C RBLC Database Search Results
Appendix D SCR Cost Analysis for Hot Oil Heaters

US EPA ARCHIVE DOCUMENT

Section 1
Introduction

Enterprise Products Operating LLC (Enterprise) currently operates the Mont Belvieu Complex, an oil and gas production facility in Chambers County. Enterprise proposes to construct two new fractionation process (Eagleford Frac) units and a deisobutanizer (DIB) unit at the Mont Belvieu Complex. The new fractionation facilities will include:

- Two Fractionation Unit deethanizer distillation columns,
- Two Fractionation Unit depropanizer distillation columns,
- Two Fractionation Unit debutanizer distillation columns,
- Two natural gas fired hot oil heaters,
- Two natural gas fired regenerant gas heaters,
- Cooling towers,
- New frac unit's contribution to a new flare (EPN SK25.001),
- Ancillary tanks,
- A deisobutanizer distillation column, and
- New DIB unit's contribution to the flare (EPN SK25.001).

The primary purpose of this permit amendment application is to obtain authorization to construct the proposed fractionation and DIB units and auxiliary equipment.

This document constitutes Enterprise's application to obtain the required TCEQ Air Quality Permit for the facilities described above. The project is subject to Prevention of Significant Deterioration (PSD) review for CO and Non-attainment New Source Review (NNSR) VOC. The project will also result in an increase in Greenhouse Gas (GHG) emissions above the 75,000 tpy CO_2 equivalent (CO_2e) PSD netting threshold. Permitting of GHG emissions in Texas is currently conducted by the USEPA Region IV; therefore, a separate permit application will be submitted to USEPA addressing PSD applicability for GHG emissions and the required analyses.

The application is organized as follows:

- **Section 1:** Identifies the project for which authorization is requested and presents the application document organization.

- **Section 2:** Contains the completed PI-1 Form and a copy of the application fee payment documentation.

- **Section 3:** Contains the area map showing the facility location and the plot plan showing the location of each emission points with respect to the plant property.

US EPA ARCHIVE DOCUMENT

- **Section 4:** Contains a brief process description and simplified process flow diagrams.

- **Section 5:** Describes the basis of the calculations for the project emissions increases and includes a completed Table 1(a).

- **Section 6:** Includes an analysis of best available control technology and lowest achievable emission rate technology for the new and modified sources.

- **Section 7:** Addresses Federal NSR applicability for the project and includes completed Tables 1F, 2F, and 3F.

- **Section 8:** Addresses each of the application requirements specified in 30TAC§116.111, including state and federal requirements.

- **Appendix A:** Contains the Material Balance (TCEQ Table 2).

- **Appendix B:** Contains emissions calculations for the affected facilities. Table 6's for the new heaters are also included in this appendix.

- **Appendix C:** Contains summaries of the RBLC database searches to support the PSD BACT analysis.

- **Appendix D:** Contains a cost effectiveness analysis for use of SCR on the Hot Oil Heaters to sort the BACT analysis.

US EPA ARCHIVE DOCUMENT

Section 2
TCEQ Forms and Application Fee

This section contains the following TCEQ forms:

- PI-1 Form
- Copy of Fee Payment Documentation

Enterprise is paying the maximum application fee of $75,000; therefore, Table 30, Capital Cost Verification, is not required.

US EPA ARCHIVE DOCUMENT

Texas Commission on Environmental Quality
Form PI-1 General Application for
Air Preconstruction Permit and Amendment

Important Note: The agency **requires** that a Core Data Form be submitted on all incoming applications unless a Regulated Entity and Customer Reference Number have been issued *and* no core data information has changed. For more information regarding the Core Data Form, call (512) 239-5175 or go to www.tceq.texas.gov/permitting/central_registry/guidance.html.

I. Applicant Information		
A. Company or Other Legal Name: Enterprise Products Operating LLC		
Texas Secretary of State Charter/Registration Number (*if applicable*):		
B. Company Official Contact Name: Mr. Terry L. Hurlburt		
Title: Senior Vice President		
Mailing Address: PO Box 4324		
City: Houston	State: TX	ZIP Code: 77210
Telephone No.: 713-381-6595	Fax No.: 713-880-6660	E-mail Address: snolan@eprod.com
C. Technical Contact Name: Mr. Chris Benton		
Title: Manager – Environmental Permitting		
Company Name: Enterprise Products Operating LLC		
Mailing Address: PO Box 4324		
City: Houston	State: TX	ZIP Code: 77210
Telephone No.: 281-381-5437	Fax No.: 713-880-6660	E-mail Address: crbenton@eprod.com
D. Site Name: Enterprise Products Operating LLC		
E. Area Name/Type of Facility: Mont Belvieu Complex		☒ Permanent ☐ Portable
F. Principal Company Product or Business: Natural gas liquids processing		
Principal Standard Industrial Classification Code (SIC): 1321 – Natural Gas Liquids		
Principal North American Industry Classification System (NAICS): 211112 – Natural Gas Liquids Extraction		
G. Projected Start of Construction Date: November 2012		
Projected Start of Operation Date: November 2013		
H. Facility and Site Location Information (If no street address, provide clear driving directions to the site in writing.):		
Street Address: 10207 FM 1942		
City/Town: Mont Belvieu	County: Chambers	ZIP Code: 77580
Latitude (nearest second):	Longitude (nearest second):	

US EPA ARCHIVE DOCUMENT

Texas Commission on Environmental Quality
Form PI-1 General Application for
Air Preconstruction Permit and Amendment

I.	**Applicant Information (continued)**	
I.	Account Identification Number (leave blank if new site or facility): CI 0008-R	
J.	Core Data Form.	
Is the Core Data Form (Form 10400) attached? If *No*, provide customer reference number and regulated entity number (complete K and L).		☐ YES ☒ NO
K.	Customer Reference Number (CN): CN6032211277	
L.	Regulated Entity Number (RN): RN102323268	
II.	**General Information**	
A.	Is confidential information submitted with this application? If *Yes*, mark each **confidential** page **confidential** in large red letters at the bottom of each page.	☐ YES ☒ NO
B.	Is this application in response to an investigation or enforcement action? If *Yes*, attach a copy of any correspondence from the agency.	☐ YES ☒ NO
C.	Number of New Jobs: 0	
D.	Provide the name of the State Senator and State Representative and district numbers for this facility site:	
Senator: Tommy Williams		District No.: 4
Representative: Craig Eiland		District No.: 23
III.	**Type of Permit Action Requested**	
A.	Mark the appropriate box indicating what type of action is requested.	
Initial ☒ Amendment ☐ Revision (30 TAC 116.116(e)) ☐ Change of Location ☐ Relocation ☐		
B.	Permit Number (if existing):	
C.	Permit Type: Mark the appropriate box indicating what type of permit is requested. *(check all that apply, skip for change of location)*	
Construction ☒ Flexible ☐ Multiple Plant ☐ Nonattainment ☒ Prevention of Significant Deterioration ☒		
Hazardous Air Pollutant Major Source ☐ Plant-Wide Applicability Limit ☐		
Other:_____		
D.	Is a permit renewal application being submitted in conjunction with this amendment in accordance with 30 TAC 116.315(c).	☐ YES ☒ NO

US EPA ARCHIVE DOCUMENT

Texas Commission on Environmental Quality
Form PI-1 General Application for
Air Preconstruction Permit and Amendment

III. Type of Permit Action Requested (continued)			
E. Is this application for a change of location of previously permitted facilities? If Yes, complete III.E.1 - III.E.4.			☐ YES ☒ NO
1. Current Location of Facility (If no street address, provide clear driving directions to the site in writing.):			
Street Address:			
City:	County:	ZIP Code:	
2. Proposed Location of Facility (If no street address, provide clear driving directions to the site in writing.):			
Street Address:			
City:	County:	ZIP Code:	
3. Will the proposed facility, site, and plot plan meet all current technical requirements of the permit special conditions? If *No*, attach detailed information.			☐ YES ☐ NO
4. Is the site where the facility is moving considered a major source of criteria pollutants or HAPs?			☐ YES ☐ NO
F. Consolidation into this Permit: List any standard permits, exemptions or permits by rule to be consolidated into this permit including those for planned maintenance, startup, and shutdown.			
List:			
G. Are you permitting planned maintenance, startup, and shutdown emissions? If *Yes*, attach information on any changes to emissions under this application as specified in VII and VIII.			☐ YES ☒ NO
H. Federal Operating Permit Requirements (30 TAC Chapter 122 Applicability)			
Is this facility located at a site required to obtain a federal operating permit? If *Yes*, list all associated permit number(s), attach pages as needed).			☒ YES ☐ NO ☐ To be determined
Associated Permit No (s.): O-1641			
1. Identify the requirements of 30 TAC Chapter 122 that will be triggered if this application is approved. FOP Significant Revision ☒ FOP Minor ☐ Application for an FOP Revision ☐ To Be Determined ☐ Operational Flexibility/Off-Permit Notification ☐ Streamlined Revision for GOP ☐ None ☐			

US EPA ARCHIVE DOCUMENT

Texas Commission on Environmental Quality
Form PI-1 General Application for
Air Preconstruction Permit and Amendment

III. Type of Permit Action Requested (continued)		
H.	Federal Operating Permit Requirements (30 TAC Chapter 122 Applicability) *(continued)*	
2.	Identify the type(s) of FOP(s) issued and/or FOP application(s) submitted/pending for the site. (check all that apply)	
GOP Issued ☐	GOP application/revision application submitted or under APD review ☐	
SOP Issued ☒	SOP application/revision application submitted or under APD review ☒	
IV. Public Notice Applicability		
A.	Is this a new permit application or a change of location application?	☒ YES ☐ NO
B.	Is this application for a concrete batch plant? If Yes, complete V.C.1 – V.C.2.	☐ YES ☒ NO
C.	Is this an application for a major modification of a PSD, nonattainment, FCAA 112(g) permit, or exceedance of a PAL permit?	☒ YES ☐ NO
D.	Is this application for a PSD or major modification of a PSD located within 100 kilometers of an affected state?	☐ YES ☒ NO
If *Yes*, list the affected state(s).		
E.	Is this a state permit amendment application? If Yes, complete IV.E.1. – IV.E.3.	
1.	Is there any change in character of emissions in this application?	☐ YES ☒ NO
2.	Is there a new air contaminant in this application?	☐ YES ☒ NO
3.	Do the facilities handle, load, unload, dry, manufacture, or process grain, seed, legumes, or vegetables fibers (agricultural facilities)?	☐ YES ☒ NO
F.	List the total annual emission increases associated with the application (*list* **all** *that apply and attach additional sheets as needed*):	
Volatile Organic Compounds (VOC): 13.0 tpy		
Sulfur Dioxide (SO_2): 12.8 tpy		
Carbon Monoxide (CO): 111.1 tpy		
Nitrogen Oxides (NO_x): 51.9 tpy		
Particulate Matter (PM): 9.7 tpy		
PM $_{10}$ microns or less (PM_{10}): 8.6 tpy		
PM $_{2.5}$ microns or less ($PM_{2.5}$): 7.1 tpy		
Lead (Pb): 0.0 tpy		
Hazardous Air Pollutants (HAPs): 0.1 tpy		
Other speciated air contaminants **not** listed above:		

US EPA ARCHIVE DOCUMENT

Texas Commission on Environmental Quality
Form PI-1 General Application for
Air Preconstruction Permit and Amendment

V. Public Notice Information (complete if applicable)		
A. Public Notice Contact Name: Ms. Shiver Nolan		
Title: Senior Compliance Administrator		
Mailing Address: PO Box 4324		
City: Houston	State: TX	ZIP Code: 77210
B. Name of the Public Place: Chambers County Library, West Chambers Branch		
Physical Address (No P.O. Boxes): 10616 Eagle Drive		
City: Mont Belvieu	County: Chambers	ZIP Code: 77580
The public place has granted authorization to place the application for public viewing and copying.		☒ YES ☐ NO
The public place has internet access available for the public.		☒ YES ☐ NO
C. Concrete Batch Plants, PSD, and Nonattainment Permits		
1. County Judge Information (For Concrete Batch Plants and PSD and/or Nonattainment Permits) for this facility site.		
The Honorable: Jimmy Silvia		
Mailing Address: P.O. Box 939		
City: Anahuac	State: TX	ZIP Code: 77514
2. Is the facility located in a municipality or an extraterritorial jurisdiction of a municipality? *(For Concrete Batch Plants)*		☐ YES ☐ NO
Presiding Officers Name(s):		
Title:		
Mailing Address:		
City:	State:	ZIP Code:
3. Provide the name, mailing address of the chief executives of the city and county, Federal Land Manager, or Indian Governing Body for the location where the facility is or will be located.		
Chief Executive:		
Mailing Address:		
City:	State:	ZIP Code:
Name of the Federal Land Manager:		
Title:		
Mailing Address:		
City:	State:	ZIP Code:

US EPA ARCHIVE DOCUMENT

US EPA ARCHIVE DOCUMENT

Texas Commission on Environmental Quality
Form PI-1 General Application for
Air Preconstruction Permit and Amendment

V. Public Notice Information (complete if applicable) (continued)		
3. Provide the name, mailing address of the chief executives of the city and county, State, Federal Land Manager, or Indian Governing Body for the location where the facility is or will be located. *(continued)*		
Name of the Indian Governing Body:		
Title:		
Mailing Address:		
City:	State:	ZIP Code:
D. Bilingual Notice		
Is a bilingual program **required** by the Texas Education Code in the School District?		☒ YES ☐ NO
Are the children who attend either the elementary school or the middle school closest to your facility eligible to be enrolled in a bilingual program provided by the district?		☒ YES ☐ NO
If *Yes*, list which languages are required by the bilingual program? Spanish		

VI. Small Business Classification (Required)	
A. Does this company (including parent companies and subsidiary companies) have fewer than 100 employees or less than $6 million in annual gross receipts?	☐ YES ☒ NO
B. Is the site a major stationary source for federal air quality permitting?	☒ YES ☐ NO
C. Are the site emissions of any regulated air pollutant greater than or equal to 50 tpy?	☒ YES ☐ NO
D. Are the site emissions of all regulated air pollutants combined less than 75 tpy?	☒ YES ☐ NO
VII. Technical Information	
A. The following information must be submitted with your Form PI-1 (this is just a checklist to make sure you have included everything)	
1. Current Area Map ☒	
2. Plot Plan ☒	
3. Existing Authorizations ☐ NA	
4. Process Flow Diagram ☒	
5. Process Description ☒	
6. Maximum Emissions Data and Calculations ☒	
7. Air Permit Application Tables ☒	
a. Table 1(a) (Form 10153) entitled, Emission Point Summary ☒	
b. Table 2 (Form 10155) entitled, Material Balance ☒	
c. Other equipment, process or control device tables ☒	

VII. Technical Information				
B.	Are any schools located within 3,000 feet of this facility?			☐ YES ☒ NO
C.	Maximum Operating Schedule:			
Hours: 24	Day(s): 7	Week(s): 52	Year(s): -	
Seasonal Operation? If Yes, please describe in the space provide below.				☐ YES ☐ NO
D.	Have the planned MSS emissions been previously submitted as part of an emissions inventory?			☐ YES ☒ NO
Provide a list of each planned MSS facility or related activity and indicate which years the MSS activities have been included in the emissions inventories. Attach pages as needed.				
E.	Does this application involve any air contaminants for which a *disaster review* is required?			☐ YES ☒ NO
F.	Does this application include a pollutant of concern on the *Air Pollutant Watch List (APWL)*?			☐ YES ☒ NO
VIII.	**State Regulatory Requirements** **Applicants must demonstrate compliance with all applicable state regulations to obtain a permit or amendment**. *The application must contain detailed attachments addressing applicability or non applicability; identify state regulations; show how requirements are met; and include compliance demonstrations.*			
A.	Will the emissions from the proposed facility protect public health and welfare, and comply with all rules and regulations of the TCEQ?			☒ YES ☐ NO
B.	Will emissions of significant air contaminants from the facility be measured?			☒ YES ☐ NO
C.	Is the Best Available Control Technology (BACT) demonstration attached?			☒ YES ☐ NO
D.	Will the proposed facilities achieve the performance represented in the permit application as demonstrated through recordkeeping, monitoring, stack testing, or other applicable methods?			☒ YES ☐ NO
IX.	**Federal Regulatory Requirements** **Applicants must demonstrate compliance with all applicable federal regulations to obtain a permit or amendment** *The application must contain detailed attachments addressing applicability or non applicability; identify federal regulation subparts; show how requirements are met; and include compliance demonstrations.*			
A.	Does Title 40 Code of Federal Regulations Part 60, (40 CFR Part 60) New Source Performance Standard (NSPS) apply to a facility in this application?			☒ YES ☐ NO
B.	Does 40 CFR Part 61, National Emissions Standard for Hazardous Air Pollutants (NESHAP) apply to a facility in this application?			☐ YES ☒ NO
C.	Does 40 CFR Part 63, Maximum Achievable Control Technology (MACT) standard apply to a facility in this application?			☒ YES ☐ NO

US EPA ARCHIVE DOCUMENT

IX. Federal Regulatory Requirements **Applicants must demonstrate compliance with all applicable federal regulations to obtain a permit or amendment** ***The application must contain detailed attachments addressing applicability or non applicability; identify federal regulation subparts; show how requirements are met; and include compliance demonstrations.***		
D.	Do nonattainment permitting requirements apply to this application?	☒ YES ☐ NO
E.	Do prevention of significant deterioration permitting requirements apply to this application?	☒ YES ☐ NO
F.	Do Hazardous Air Pollutant Major Source [FCAA 112(g)] requirements apply to this application?	☐ YES ☒ NO
G.	Is a Plant-wide Applicability Limit permit being requested?	☐ YES ☒ NO
X. Professional Engineer (P.E.) Seal		
Is the estimated capital cost of the project greater than $2 million dollars?		☒ YES ☐ NO
If *Yes*, submit the application under the seal of a Texas licensed P.E.		
XI. Permit Fee Information		
Check, Money Order, Transaction Number ,ePay Voucher Number:		Fee Amount: $75,000
Company name on check: Enterprise Products Operating LLC		Paid online?: ☐ YES ☒ NO
Is a copy of the check or money order attached to the original submittal of this application?		☒ YES ☐ NO ☐ N/A
Is a Table 30 (Form 10196) entitled, Estimated Capital Cost and Fee Verification, attached?		☐ YES ☐ NO ☒ N/A

US EPA ARCHIVE DOCUMENT

XII. Delinquent Fees and Penalties
This form **will not be processed** until all delinquent fees and/or penalties owed to the TCEQ or the Office of the Attorney General on behalf of the TCEQ is paid in accordance with the Delinquent Fee and Penalty Protocol. For more information regarding Delinquent Fees and Penalties, go to the TCEQ Web site at: www.tceq.texas.gov/agency/delin/index.html.
XIII. Signature
The signature below confirms that I have knowledge of the facts included in this application and that these facts are true and correct to the best of my knowledge and belief. I further state that to the best of my knowledge and belief, the project for which application is made will not in any way violate any provision of the Texas Water Code (TWC), Chapter 7, Texas Clean Air Act (TCAA), as amended, or any of the air quality rules and regulations of the Texas Commission on Environmental Quality or any local governmental ordinance or resolution enacted pursuant to the TCAA I further state that I understand my signature indicates that this application meets all applicable nonattainment, prevention of significant deterioration, or major source of hazardous air pollutant permitting requirements. The signature further signifies awareness that intentionally or knowingly making or causing to be made false material statements or representations in the application is a criminal offense subject to criminal penalties.
Name: Mr. Terry L. Hurlburt, Senior Vice President
Signature: _____ *Original Signature Required*
Date: _____

US EPA ARCHIVE DOCUMENT

Copy of Fee Payment Verification

US EPA ARCHIVE DOCUMENT

Section 3
Area Map and Plot Plan

An Area Map showing the location of the Enterprise Mont Belvieu Complex is presented in Figure 3-1. A plot plan showing the location of the new facilities is presented in Figure 3-2.

US EPA ARCHIVE DOCUMENT

US EPA ARCHIVE DOCUMENT

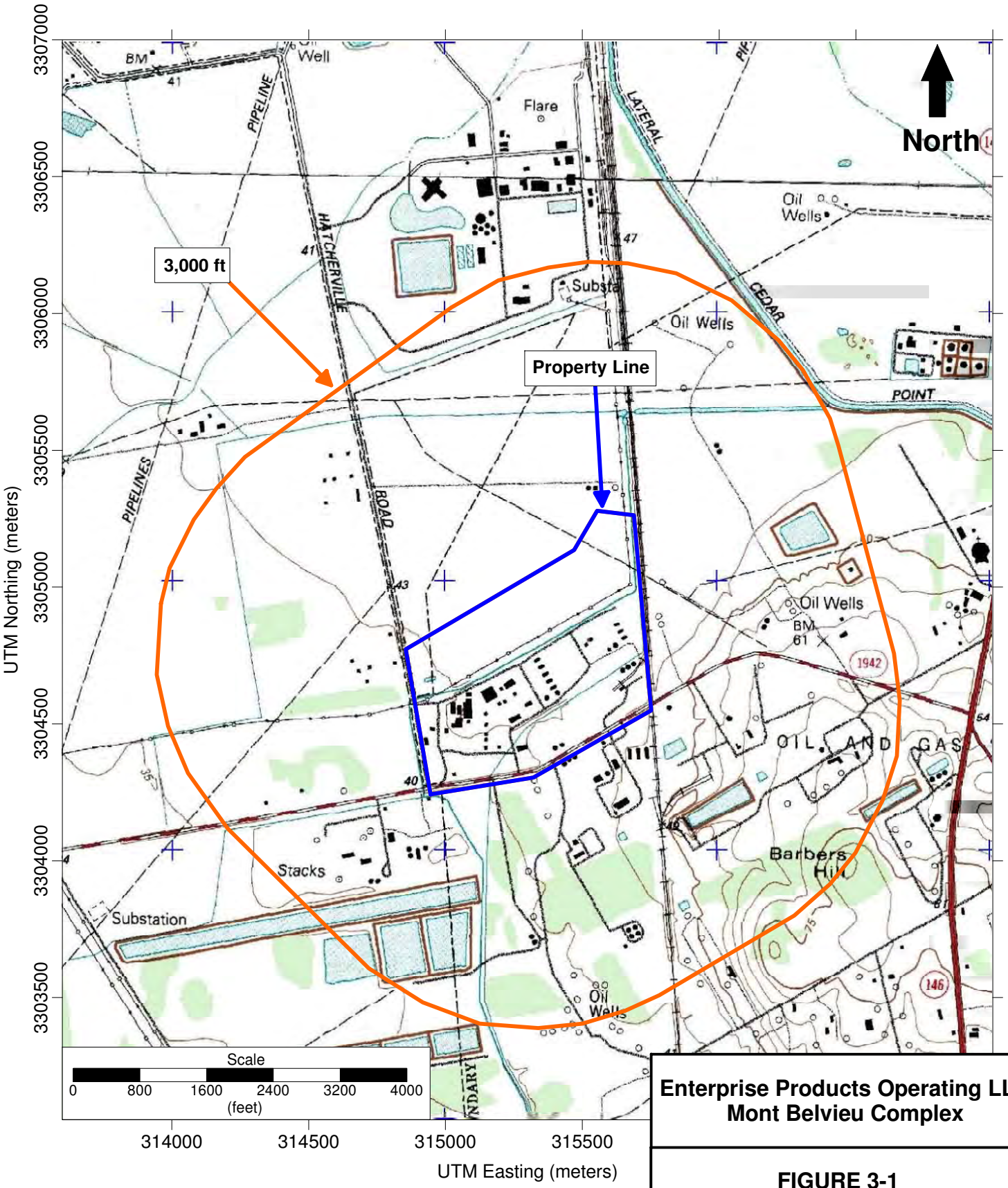

Enterprise Products Operating LLC
Mont Belvieu Complex

FIGURE 3-1
Area Map

Source: mytopo.com/
Zone: 15
Coordinate Datum: NAD 83

RPS

14450 JFK Blvd., Suite 400
Houston, TX 77032

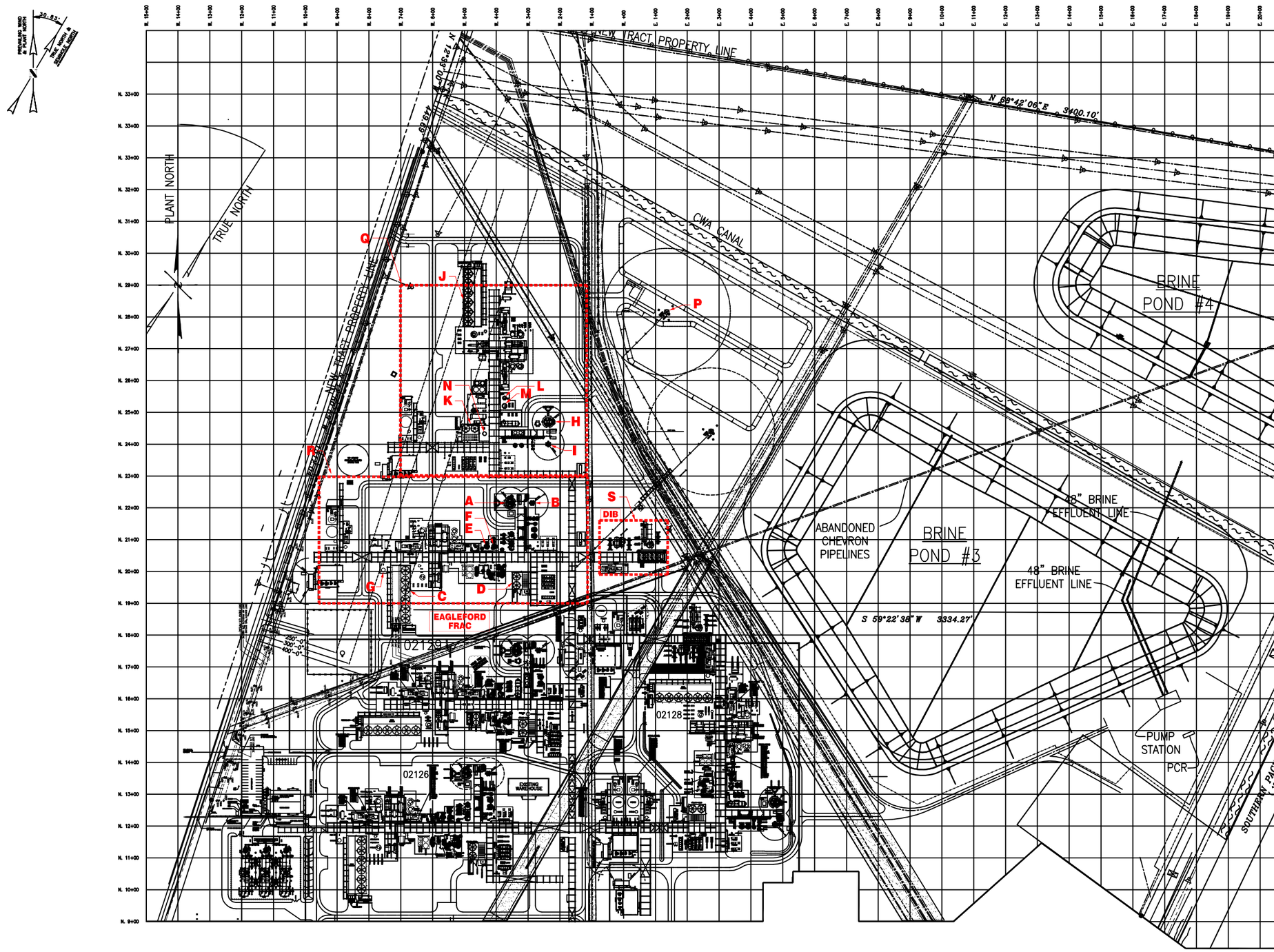

REF.	EQUIP. NUMBER	LONGITUDE	LATITUDE
A	HR15.001 (A)	W 94.915824	N 29.864707
B	HR15.002 (A)	W 94.91562	N 29.864828
C	HT16.028 (A)	W 94.916500	N 29.863507
D	HT16.029 (A)	W 94.915609	N 29.863833
E	SV19.002 (A)	W 94.916221	N 29.864093
F	SV19.003 (A)	W 94.91606	N 29.86413
G	SV19.006 (A)	W 94.917369	N 29.863637
H	HR15.001 (B)	W 94.916071	N.29.865489
I	HR15.002 (B)	W 94.915996	N.29.865442
J	HT16.028 (B)	W 94.917498	N 29.866559
K	HT16.029 (B)	W 94.916865	N 29.864986
L	SV19.002 (B)	W 94.916811	N 29.865619
M	SV19.003 (B)	W 94.916747	N 29.865591
N	SV19.006 (B)	W 94.916446	N 29.864968
P	SK25.001	W 94.915727	N 29.866735
Q	FRAC F EFb	W 94.917132	N 29.865105
R	FRAC F EFa	W 94.91718	N 29.864409
S	DIB	W 94.91472	N 29.864544

Enterprise Products Operating LLC
Mont Belvieu Plant

Figure 3-2
Plot Plan

RPS

14450 JFK Boulevard, Suite 400,
Houston, Texas, 77032

Section 4
Project and Process Description

The natural gas liquids (NGL) fractionation units at the Mont Belvieu Complex to be authorized by this permit will be used to separate an NGL feed into separate ethane, propane, butane, and gasoline fractions. A simplified process flow diagram for the fractionation units is shown in Figure 4-1. The deisobutanizer (DIB) unit is used to separate isobutane and normal butane from mixed butane streams. A simplified process flow diagram for the DIB Unit is shown in Figure 4-2. Each unit consists of a number of fractionation columns and other operations as described below.

4.1 Fractionation Units

The pipeline feed mixture is processed in the feed filter, feed coalescer, and amine contactors to remove particulates, sulfides, and carbon dioxide. The sweetened feed is then dehydrated and fed to the Deethanizer column. The Deethanizer is used to fractionate the feed into two fractions. The overhead vapor fraction consists of ethane and lighter components and is condensed by heat exchange against propylene refrigerant. Propylene vapor from the Deethanizer condenser is first compressed in a two-stage machine and then is condensed in a wet-surface air cooler (EPNs HT 16.028A and B). The liquid propylene is then sub-cooled against low-temperature ethane before being fed back to the Deethanizer column condenser as refrigerant. A portion of the condensed ethane is pumped out of the unit as ethane product to the existing storage facility, and the balance is refluxed back to the column. The bottom fraction from the column, consisting mainly of propane and heavier components, is fed to the Depropanizer column. Heat for fractionation is provided by a hot oil reboiler at the bottom of the column.

The Depropanizer column takes the feed from the Deethanizer bottom and separates it into a propane and lighter fraction, which goes overhead, and a butane and heavier fraction, which exits the bottom. Condensing for the column is provided by a heat pump circuit and a wet-surface air cooler. The propane heat pump circuit exchanges against the Depropanizer side reboiler and two reboilers attached to the Deethanizer column. The wet-surface air cooler (EPNs HT16.029A and B) is used to sub-cool the condensed propane. Part of the propane is refluxed back to the column and the balance is sent to the existing storage complex as product. Heat for fractionation is provided by a hot oil reboiler at the bottom of the column.

US EPA ARCHIVE DOCUMENT

The stream from the bottom of the Depropanizer is fed to the Debutanizer column, which fractionates it into an overhead stream containing mixed butanes (primarily normal butane and isobutane), and a bottoms gasoline stream which contains pentanes and heavier. Part of the overhead butane stream is refluxed back to the column and the balance is sent to storage tanks as an intermediate feed for other units or as commercial butane product. The bottoms gasoline is routed to existing gasoline treating facilities. Condensing for the Debutanizer is provided by the Deethanizer Upper Side Reboiler, and heat for fractionation in the Debutanizer is provided by a hot oil reboiler at the bottom of the column.

Hot oil used in the column reboilers is provided by a natural gas fired hot oil system (EPNs HR15.001A and B). The same hot oil heater also supplies heat for the amine regeneration column used to sweeten the NGL entering the unit. The heat needed for the dehydration system is provided by the regenerant gas heater (EPNs HR15.002A and B).

Ancillary to each of the fractionators will be three tanks. One tank in each Frac will store 85% diethanolamine (EPNs SV19.002A and B) and one will store 25% diethanolamine (EPNs SV18.003A and B). Each of these tanks will store material with a VOC vapor pressure of less than 0.00002 psia and have no applicable requirements. A wastewater tank will also be included in each Frac (EPNS SV19.006A and B).

Emission sources from this process include process emissions from heaters, cooling towers, tanks, equipment leak fugitives (EPNs FRAC F EFa, FRAC F EFb), and process vents that will be routed to a new flare (EPN SK25.001). The requirements of NSPS Subparts A and KKK and TCEQ Chapters 111, 112, 115, and 117 apply to the operations of each Fractionation Unit.

4.2 Deisobutanizer Unit

Butane mixtures arrive at the Mont Belvieu Complex via pipeline and enter the DIB unit from the butamer units, or from the Mont Belvieu Complex storage facility, as commercial butane mixtures. The mixed butanes are routed to the deisobutanizer distillation column, where the separation of isobutane and normal butane occurs. The overhead vapor stream from the column is isobutane, which is compressed into liquid phase isobutane. The liquefied isobutane product is split into two streams, one providing reflux for the column, and the remaining stream sent to the storage area or delivered to other Enterprise units as feed material. The overhead compressors are electric driven and do not have any combustion emissions.

US EPA ARCHIVE DOCUMENT

The bottoms stream from the DIB distillation column contains pentane and C_6+ hydrocarbons that are removed by further processing. The bottoms stream, mainly normal butane, is routed to the Pentane Stripper distillation columns A and B where the pentane and the C_6+ are removed and the purified n-butane is returned to butane isomerization as feed.

Emission sources from this process include equipment leak fugitives and process vents which are routed to a new flare (EPN SK25.001).

US EPA ARCHIVE DOCUMENT

US EPA ARCHIVE DOCUMENT

ENTERPRISE MONT BELVIEU
FRACTIONATORS A/B
BLOCK FLOW DIAGRAM
FOR PERMITTING PURPOSES
DECEMBER, 2011
FIGURE 4-1

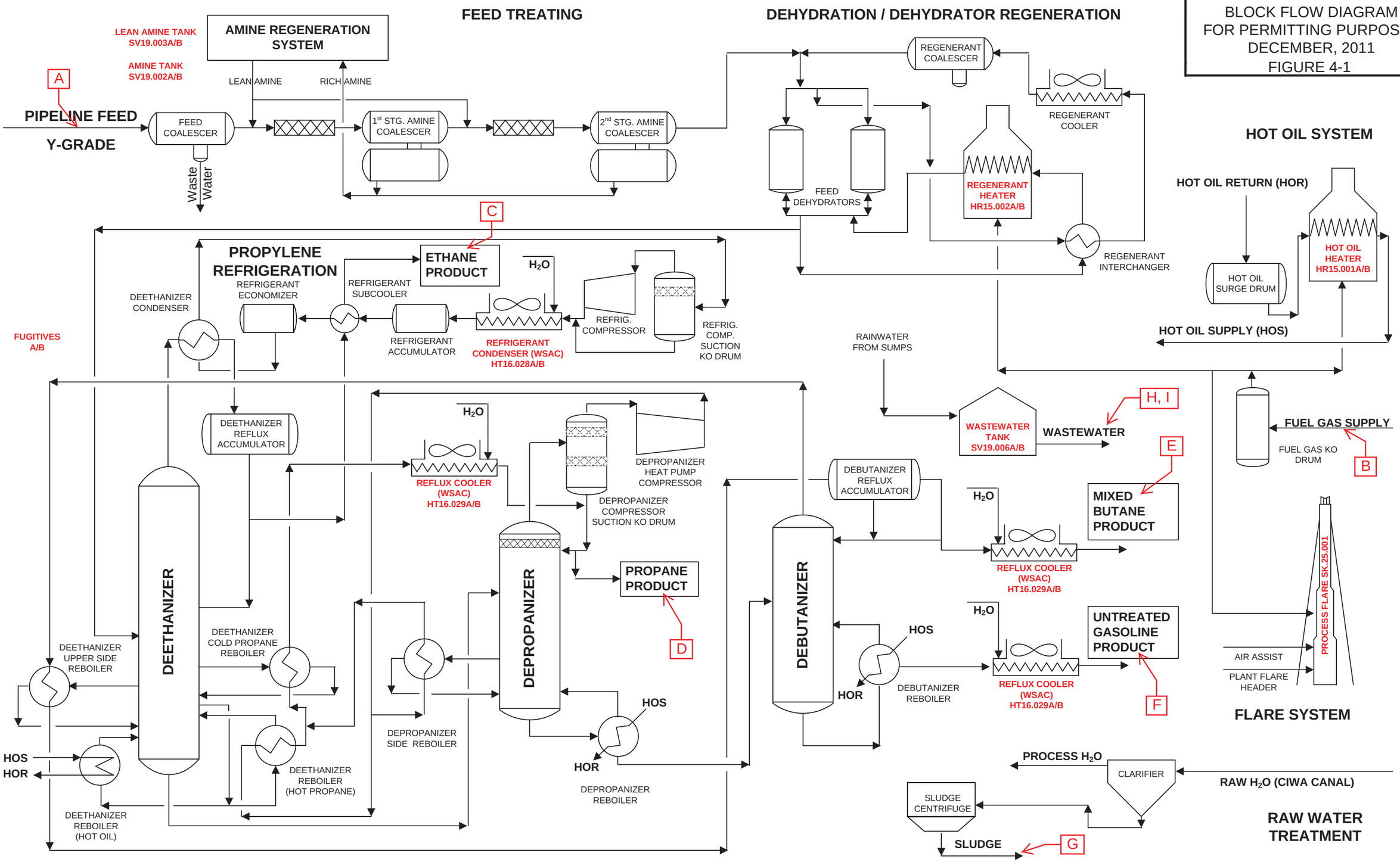

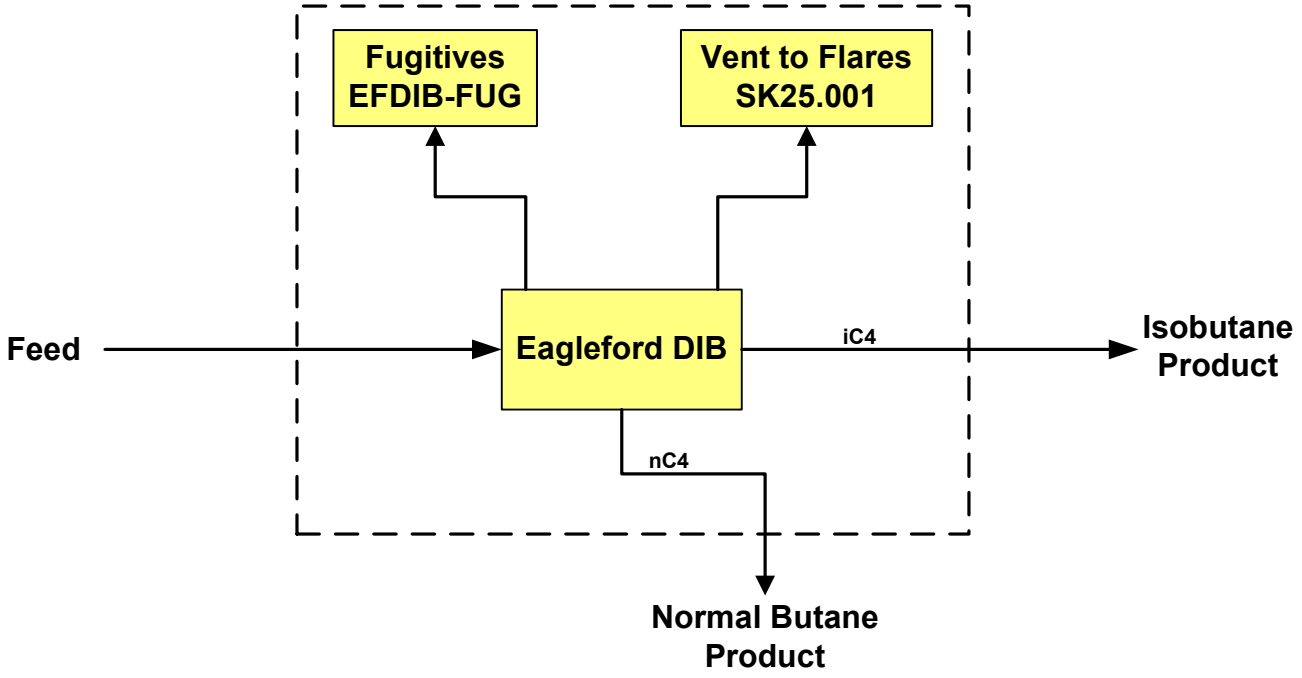

Enterprise Products Operating LLC
Mont Belvieu Complex

Figure 4-2
Process Flow Diagram

RPS

14450 JFK Boulevard, Suite 400,
Houston, Texas, 77032.

US EPA ARCHIVE DOCUMENT

Section 5
Emission Rate Basis

This section contains the completed Table 1(a), listing the emission sources and associated emission rates included in this application. Emission calculations methods are also described. A summary of project emissions is included in Appendix B. Detailed emission calculations for each emission point are presented in Appendix B.

5.1 Heaters

There will be four new natural gas fired process heaters constructed for the project: two Hot Oil Heaters (EPNs HR 15.001A and B) and two Regenerant Heaters (EPNs HR 15.002A and B).

Hourly emissions were calculated based on the maximum fuel firing rate of each heater, and annual emissions were calculated assuming the maximum hourly rate occurs continuously (8,760 hr/yr) all year. Annual average NO_x emissions are based on vendor guarantees that meet applicable BACT requirements. Maximum hourly emissions of NO_x from the Regenerant Heaters are based on 1.4 times the annual average to allow for process variations that result in periodic spikes in emissions. Maximum hourly emissions of NO_x from the Hot Oil Heaters are based on CEMS data from similar heaters at Mont Belvieu. Annual average and hourly maximum CO rates for the Hot Oil Heaters are based on a vendor guarantee. Annual average CO emissions from the Regenerant Heaters are based on a vendor guarantee, and maximum hourly CO emissions are two times the annual average emission factor. Hourly and annual $PM/PM_{10}/PM_{2.5}$ emissions for all heaters were calculated using a factor of 0.004 lb/MMBtu, which is based on stack test data and vendor quotes from similar units. Hourly and annual VOC emissions for all heaters were calculated using a factor of 0.002 lb/MMBtu, which is based on stack test data from similar units. Hourly and annual SO_2 emissions were based on the sulfur content of the fuel assuming 100% conversion to SO_2.

5.2 Cooling Towers

Each of the two frac units will have two wet surface-air coolers for a total of four cooling towers (EPNs HT 16.028A and B, and HT 18.029A and B). The wet surface air coolers differ from typical cooling towers in that water from the coolers will not be circulated through heat exchangers in VOC service that can develop leaks. Instead, the VOC liquids are circulated

US EPA ARCHIVE DOCUMENT

through the coolers in welded closed loop tube bundles where they are sprayed with water to create a cooling effect; therefore, they are not a source of VOC. Emissions consist only of $PM/PM_{10}/PM_{2.5}$ from the solids contained in drift losses from the towers. Emissions were calculated from the design drift loss rate (% of circulating water), the circulation rate and the design maximum dissolved solids content of the circulating water. PM emissions were speciated into size fractions based on representative droplet size data provided by cooling tower vendors that were used to calculate the diameters of the solid particles that remain following evaporation of the water in the droplets.

5.3 Process Fugitive Emissions

Process fugitive (equipment leak) emissions consist of VOC from the new piping components (EPNs FRAC F EFa, FRAC F EFb, and EFDIB FUG). The 28LAER leak detection and repair (LDAR) program will be applied to the new VOC components associated with the Project. In additional, all flanges and connectors will be monitored quarterly using the same leak detection level used for valves. All emissions calculations utilize current TCEQ factors and methods in the TCEQ's *Air Permit Technical Guidance for Chemical Sources: Equipment Leak Fugitives, October 2000.* Each fugitive component was classified first by equipment type (valve, pump, relief valve, etc.) and then by material type (gas/vapor, light liquid, heavy liquid). Uncontrolled emission rates were obtained by multiplying the number of fugitive components of a particular equipment/material type by the appropriate SOCMI emission factor. To obtain controlled fugitive emission rates, the uncontrolled rates were multiplied by a control factor, which was determined by the 28LAER LDAR program. The VOC emissions were then calculated by multiplying the total controlled emission rate by the weight percent of VOC in the process streams. The fugitive emissions calculations are included in Appendix B.

5.4 Tank Emissions

There will be 6 new storage tanks installed to support the proposed frac units. These include two lean amine tanks (EPNs SV19.003A and B), two rich amine tanks (EPNs SV19.002A and B), and two wastewater tanks that contain VOC (EPNs SV19.006A and B). All tanks are fixed roof tanks. VOC emissions were calculated using fixed roof tank working and breathing loss equations in Section 12.3 of AP-42, Fifth Edition, January, 1995. Maximum hourly working loss emissions were calculated using the maximum pumping rate for each tank in accordance with TCEQ guidance.

US EPA ARCHIVE DOCUMENT

5.5 Flare Emissions

The two proposed frac units and the proposed DIB unit will each have vents that will be routed to a new flare (EPN SK25.001) for control. Emissions of VOC, SO_2, NO_x, and CO were calculated in accordance with TCEQ guidelines using TCEQ recommended and approved destruction efficiencies and emission factors in the TCEQ's *Air Permit Technical Guidance for Chemical Sources: Flares and Oxidizers, October 2000.* The destruction efficiency used for VOC compounds is a flare specific efficiency based on documentation that has been previously approved by TCEQ. Emissions of CO and NO_x were calculated using TCEQ factors in the above referenced guidance document. SO_2 emissions are based on 100% conversion of fuel/waste stream sulfur to SO_2.

US EPA ARCHIVE DOCUMENT

US EPA ARCHIVE DOCUMENT

PERMIT NO. 10091 PERMIT TYPE: CONSTRUCTION [X] AMENDMENT [ ] ALTERATION [ ] RENEWAL [ ]
ACCOUNT ID NO. CI0008R

TABLE 1(a)
EMISSION SOURCES

DATE 5/10/2012

Review of applications and issuance of permits will be expedited by supplying all necessary information requested on this Table.

AIR CONTAMINANT DATA					EMISSION POINT DISCHARGE PARAMETERS											
EMISSION POINT [1]		COMPONENT OR AIR CONTAMINANT NAME [2]	AIR CONTAMINATE EMISSION RATE		UTM COORDINATES OF EMISSION PT. [5]			SOURCE								
								HEIGHT ABOVE GROUND	HEIGHT ABOVE STRUCT.	STACK EXIT DATA			FUGITIVES			
NUMBER	NAME		#/HR [3]	TONS/ YR [4]	ZONE	EAST [meters]	NORTH [meters]	[ft.]	[ft.] [6(A)]	DIA [ft.] [6(B)]	VEL [fps] [6(C)]	TEMP [F] [6(D)]	LENGTH [ft.] [7(A)]	WIDTH [ft.] [7(B)]	AXIS DEG. [7(C)]	E/W OF NORTH [7(D)]
EPN HR15.001A	Hot Oil Heater	NO_x	4.00	15.33	15	314,955	3,305,334	110		7.17	18.76	393				
FIN HR15.001A		CO	6.25	27.36												
EPN		VOC	0.28	1.23												
FIN		PM	0.56	2.45												
EPN		SO_2	0.35	1.52												
FIN		Formaldehyde	0.01	0.05												
EPN HR15.001B	Hot Oil Heater	NO_x	4.00	15.33	15	314,933	3,305,421	110		7.17	18.76	393				
FIN HR15.001B		CO	6.25	27.36												
EPN		VOC	0.28	1.23												
FIN		PM	0.56	2.45												
EPN		SO_2	0.35	1.52												
FIN		Formaldehyde	0.01	0.05												
EPN HR15.002A	Regenerant Heater	NO_x	1.00	3.12	15	314,975	3,305,347	71		3.08	23.71	520				
FIN HR15.002A		CO	2.54	5.57												
EPN		VOC	0.06	0.25												
FIN		PM	0.14	0.62												
EPN		SO_2	0.07	0.31												
FIN		Formaldehyde	<0.01	<0.01												
EPN HR15.002B	Regenerant Heater	NO_x	1.00	3.12	15	314,940	3,305,416	71		3.08	23.71	520				
FIN HR15.002B		CO	2.54	5.57												
EPN		VOC	0.06	0.25												
FIN		PM	0.14	0.62												
EPN		SO_2	0.07	0.31												
FIN		Formaldehyde	<0.01	<0.01												
EPN FRAC F EFa	Frac A Process	VOC	0.46	2.00	15	314,824	3,305,304	5					400	800	33	W
FIN FRAC F EFa	Fugitives															
EPN FRAC F EFb	Frac B Process	VOC	0.46	2.00	15	314,830	3,305,381	5					600	590	33	W
FIN FRAC F EFb	Fugitives															
EPN HT16.028A	Refrigerant Condenser	PM	0.33	1.44	15	314,888	3,305,202	31.5		24	19.5	86	58	180	33	W
FIN HT16.028A		PM_{10}	0.22	0.99												
		$PM_{2.5}$	0.09	0.38												
EPN HT16.028B	Refrigerant Condenser	PM	0.33	1.44	15	314,797	3,305,542	31.5		24	19.5	86	58	180	33	W
FIN HT16.028B		PM_{10}	0.22	0.99												
		$PM_{2.5}$	0.09	0.38												
EPN HT16.029A	Reflux Cooler	PM	0.08	0.34	15	314,974	3,305,237	31.5		20	33.1	85	33	55	33	W
FIN HT16.029A		PM_{10}	0.05	0.23												
		$PM_{2.5}$	0.02	0.09												

US EPA ARCHIVE DOCUMENT

PERMIT NO. 10091 PERMIT TYPE: CONSTRUCTION [X] AMENDMENT [ ] ALTERATION [ ] RENEWAL [ ]
ACCOUNT ID NO. CI0008R

TABLE 1(a)
EMISSION SOURCES

DATE 5/10/2012

Review of applications and issuance of permits will be expedited by supplying all necessary information requested on this Table.

AIR CONTAMINANT DATA					EMISSION POINT DISCHARGE PARAMETERS											
EMISSION POINT [1]		COMPONENT OR AIR CONTAMINANT NAME [2]	AIR CONTAMINATE EMISSION RATE		UTM COORDINATES OF EMISSION PT. [5]			SOURCE								
								HEIGHT ABOVE GROUND	HEIGHT ABOVE STRUCT.	STACK EXIT DATA			FUGITIVES			
NUMBER	NAME		#/HR [3]	TONS/ YR [4]	ZONE	EAST [meters]	NORTH [meters]	[ft.]	[ft.] [6(A)]	DIA [ft.] [6(B)]	VEL [fps] [6(C)]	TEMP [F] [6(D)]	LENGTH [ft.] [7(A)]	WIDTH [ft.] [7(B)]	AXIS DEG. [7(C)]	E/W OF NORTH [7(D)]
EPN HT16.029B	Reflux Cooler	PM	0.08	0.34	15	314,855	3,305,367	31.5		20	33.1	85	33	55	33	W
FIN HT16.029B		PM_{10}	0.05	0.23												
		$PM_{2.5}$	0.02	0.09												
EPN SV19.003A	Lean Amine Tank	VOC	<0.01	<0.01	15	314,931	3,305,271	15		0.5	0.1	Ambient				
FIN SV19.003A																
EPN SV19.003B	Lean Amine Tank	VOC	<0.01	<0.01	15	314,868	3,305,434	15		0.5	0.1	Ambient				
EPN SV19.003B																
EPN SV19.002A	Amine Tank	VOC	<0.01	<0.01	15	314,916	3,305,267	15		0.5	0.1	Ambient				
FIN SV19.002A																
EPN SV19.002B	Amine Tank	VOC	<0.01	<0.01	15	314,861	3,305,437	15		0.5	0.1	Ambient				
FIN SV19.002B																
EPN SV19.006A	Wastewater Tank	VOC	0.36	0.03	15	314,804	3,305,218	11		0.5	0.1	Ambient				
FIN SV19.006A																
EPN SV19.006B	Wastewater Tank	VOC	0.36	0.03	15	314,895	3,305,364	11		0.5	0.1	Ambient				
FIN SV19.006B																
EPN SK25.001	Flare	NO_x	15.82	14.99	15	314,968	3,305,559	220		2.0	0.0					
FIN SK25.001		CO	31.67	45.19												
		VOC	19.36	4.40												
		SO_2	2.09	9.18												
		H_2S	0.02	0.10												
EPN EFDIB-FUG	DIB Unit Process Fugitives	VOC	0.37	1.61	15	315,062	3,305,315	5					170	210	33	W
FIN																

Note: Flare emissions include MSS

EPN = EMISSION POINT NUMBER
FIN = FACILITY IDENTIFICATION NUMBER

GROUND ELEVATION OF FACILITY ABOVE MEAN SEA LEVEL 22 feet.
TNRCC STANDARD CONDITIONS ARE 68F AND 14.7 PSIA [GENERAL RULE 101.1].

Section 6
BACT and LAER Analyses

Per 30 TAC §116.111(a)(2)(C), new or modified facilities must utilize best available control technology (BACT), with consideration given to the technical practicability and economic reasonableness of reducing or eliminating the emissions from the facility. Each facility is evaluated on a case-by-case basis. The new and modified facilities associated with the project are the four heaters, four cooling towers, process fugitives, flare, and six tanks. This BACT analysis addresses these emission sources.

As described in TCEQ's guidance document entitled *Evaluating Best Available Control Technology (BACT) in Air Permit Applications (April 2001)*, the State BACT evaluation is to be conducted using a tiered analysis approach. The evaluation begins at the first tier and continues sequentially through subsequent tiers only if necessary as determined by the evaluation process described in this document. In each tier, BACT is evaluated on a case-by-case basis.

In the first tier, controls accepted as BACT in a recent permit review for the same process in the same industry are approved as BACT in a current review if no new technical developments have been made that would justify additional controls as economically or technically reasonable. According to the TCEQ, the second tier takes into account controls that have been accepted as BACT in recent permits for similar facilities in a different process or industry. The third tier of the TCEQ BACT approach consists of a detailed technical and economic analysis of all control options available for the process under review. Where State BACT is applicable, the analysis is based on Tier I.

The project is subject to PSD review for CO and NNSR for VOC; therefore, the PSD BACT and the NNSR LAER analyses includes RACT/BACT/LAER Clearinghouse (RBLC) searches for these pollutants for the new and modified sources. RBLC summaries are presented in Appendix C.

US EPA ARCHIVE DOCUMENT

6.1 Heaters

6.1.1 NO_x

Nitrogen oxides (NO_x) emissions from natural gas-fired combustion sources, including heaters, result from either the combination of elemental nitrogen with oxygen in the combustion air within the combustion device (thermal NO_x) or from the oxidation of organically bound nitrogen contained in the fuel (fuel NO_x). Natural gas, which will be used as fuel for the proposed Hot Oil Heaters and Regenerant Heaters, does not contain significant amounts of organic nitrogen; therefore, most of the NO_x emissions are considered thermal NO_x.

BACT guidance on the TCEQ website at the time of preparation of this permit application states that BACT for NO_x from process furnaces and heaters less than 300 MMBtu/hr is burners with the best available NOx performance for the given burner application. Enterprise proposes to use ultra low NO_x burners that will limit annual average NO_x emissions to less than or equal to 0.025 lb/MMBtu on both the Hot Oil Heaters (140 MMBtu/hr each) and the Regenerant Heaters (28.5 MMBtu/hr each). This level of NO_x emissions is the lowest emission rate that heater vendors have indicated that they can meet with burners used for this configuration; therefore, a Tier III cost analysis based on the use of a selective catalytic reduction (SCR) system to achieve a lower outlet NO_x concentration (0.01 lb/MMBtu) through was conducted. This analysis is presented in Appendix D. The cost effectiveness of reducing NO_x emissions to 0.01 lb/MMBtu using SCR was determined to be $31,359 per ton. This cost is not considered cost effective; therefore, SCR was eliminated from further consideration as BACT, and use of ultra low NO_x burners to achieve an annual average NO_x emission rate of 0.025 lb/MMBtu or less was determined to be BACT. Maximum lb/hr NO_x emissions from the Hot Oil Heaters are set at 4.00 lb/hr, which is equivalent to about 0.029 lb/MMBtu at full capacity. At reduced firing rates, the NO_x emissions may exceed 0.029 lb/MMBtu, but will not exceed 4.00 lb/hr. Maximum lb/hr NO_x emissions from the Regenerant Heaters are based on 0.035 lb/MMBtu when firing at full capacity. At reduced firing rates, the NO_x emissions may exceed 0.035 lb/MMBtu; however, the maximum lb/hr rate at full load will not be exceeded.

6.1.2 CO

Carbon monoxide (CO) emissions from gas-fired heaters are the result of incomplete fuel combustion. Operating conditions that can enhance CO formation include low temperature,

US EPA ARCHIVE DOCUMENT

insufficient residence time, and insufficient oxygen in the combustion zone. Insufficient oxygen can be the result of a low air-to-fuel ratio, inadequate mixing, or both.

With proper combustion technology and design, generation of CO is minimized by maintaining good combustion efficiency in a gas-fired heater. Combustion efficiency in heaters is a function of both design and operation. Proper fuel-to-air ratio and a design that provides the necessary residence time, temperature, and turbulence within the combustion zone ensure good combustion. BACT guidance on the TCEQ website at the time of preparation of this permit applications states that BACT for CO from process heaters and heaters is an exhaust concentration of 50 ppmvd at 3% oxygen, which is equivalent to about 0.035 lb/MMBtu.

An RBLC database search was also conducted for heaters bewtween 100 and 250 MMBtu/hr firing natural gas that have been permitted in the past 10 years. The results of the search are presented in Table C-1 of Appendix C. Approximately 86 heaters were identified in the database that met these criteria. Heaters up to about 500 MMBtu/hr that were identified in the search were retained in the analysis. The reported or calculated CO emission rates for these heaters ranged from 0.004 lb/MMBtu to 0.16 lb/MMBtu. Good combustion practices and design are the only control methods identified in the RBLC database for CO control. Only one heater in the RBLC had a limit of 0.004 lb/MMBtu, and this limit was calculated from data in the database and not actually states as a limit; therefore, it could not be confirmed if the calculated limit was accurate. All other heaters in the database had CO limits of 0.033 lb/MMBtu or higher, which is equivalent to the TCEQ BACT guideline of 50 ppmvd at 3% O_2. The proposed CO emission rates for the Enterprise heaters is also based on 50 ppmvd. This emission limit will be met on an annual average basis. As demonstrated above, this CO level satisfies BACT requirements.

6.1.3 PM/PM_{10}/$PM_{2.5}$

Emissions of particulate matter (PM), which includes particulate matter less than 10 microns in diameter (PM_{10}) and less than 2.5 microns in diameter ($PM_{2.5}$), from gas-fired heaters result from inert solids in the fuel and combustion air and from unburned fuel hydrocarbons that agglomerate to form particles that are emitted in the exhaust. PM/PM_{10}/$PM_{2.5}$ emissions from gas-fired heaters are inherently low because they achieve high combustion efficiencies and usually burn clean fuels. TCEQ does not specify a BACT guideline for PM emissions from gas-fired heaters. The RBLC database search identified about 100 gas fired heaters and boilers with firing rates of about 500 MMBtu/hr and less. The RBLC data, summarized in Table C-2 of Appendix C, indicates that no PM/PM_{10}/$PM_{2.5}$ control strategies other than good combustion and

US EPA ARCHIVE DOCUMENT

use of clean fuels have been applied to gas-fired heaters. Reported and calculated emission rates range from 0.0009 lb/MMBtu to 0.013 lb/MMBtu, with the overwhelming majority being between 0.007 and 0.008 lb/MMBtu. Enterprise proposes a BACT level of 0.004 lb/MMBtu for both the Hot Oil and Regeneration heaters. Given the low level of emissions, further control is not warranted or available for gaseous fuel combustion, and efficient combustion of clean fuel is proposed as BACT to meet an emission limit equivalent to 0.004 lb/MMBtu.

6.1.4 VOC

The proposed project is subject to NNSR for VOC; therefore, VOC emissions from the heaters must meet LAER requirements. Volatile organic compound (VOC) emissions from gas-fired heaters are the result of incomplete fuel combustion. Similar to CO, operating conditions that can enhance VOC formation include low temperature, insufficient residence time, and insufficient oxygen in the combustion zone. Insufficient oxygen can be the result of a low air-to-fuel ratio, inadequate mixing, or both.

With proper combustion technology and design, generation of VOC is minimized by maintaining good combustion efficiency in a gas-fired heater. Combustion efficiency in heaters is a function of both design and operation. Proper fuel-to-air ratio and a design that provides the necessary residence time, temperature, and turbulence within the combustion zone ensure good combustion. TCEQ does not specify a BACT/LAER guideline for VOC emissions from gas-fired heaters. The RBLC database search identified about 60 gas fired heaters and boilers with firing rates of about 500 MMBtu/hr and less. The RBLC data, summarized in Table C-3 of Appendix C, indicates that no VOC control strategies other than proper design and good combustion practices has been applied to gas-fired heaters. Reported and calculated emission rates range from 0.0004 lb/MMBtu to 0.011 lb/MMBtu, with the overwhelming majority being between 0.003 and 0.006 lb/MMBtu. Given the low level of emissions, further control is not warranted or available, and efficient combustion is proposed as LAER to meet an emission limit equivalent to 0.002 lb/MMBtu for the proposed heaters.

6.1.5 SO_2

Emissions of sulfur dioxide (SO_2) from the heaters will be controlled by burning natural gas with minimal sulfur content. Given the low level of SO_2 emissions, further control is not warranted, and use of clean gaseous fuels is proposed as BACT.

US EPA ARCHIVE DOCUMENT

6.2 Cooling Towers

The proposed cooling towers are not in VOC service and are therefore only sources of $PM/PM_{10}/PM_{2.5}$ from drift losses. A search of the RBLC database identified 193 entries for PM emissions from cooling towers. A summary of the search is presented in Table C-4 of Appendix C. For facilities for which drift loss rates were reported, the rates ranged from 0.0005% to 0.008%. The PM control for all towers was listed as either drift/mist eliminators or no control was listed. No other control technologies were identified.

Total dissolved solids (TDS) in the circulating water also determine the amount of particulate emissions in the drift. Therefore, limiting the TDS concentration is also considered to be a potentially viable control option. Drift eliminators with a design efficiency of 0.001% of the circulating water will be used on both cooling towers. This technology and the design efficiency are among the most efficient identified in the RBLC and available from vendors. The TDS in the cooling towers will also be maintained at or below 3,500 ppmw, annual average basis, to further minimize emissions. This TDS level and the design drift lost from the cooling towers are at the low end of the range found in the RBLC database, and therefore represent BACT.

6.3 Process Fugitives

A TCEQ Leak Detection and Repair (LDAR) Program is used for all process fugitive VOCs at the Mont Belvieu Complex, and 28MID will be used for the proposed new components that are in VOC service. This is TCEQ's most stringent LDAR program. In addition to the requirements of the 28LAER program, Enterprise monitors all flanges and connectors at the 1000 ppm leak definition and the same quarterly schedule required for valves and will utilize leak free pumps. An RBLC database search was conducted to identify fugitive emission control strategies. The database search, summarized in Table C-5 of Appendix C, identified various LDAR programs as BACT for fugitive VOC emissions. One identified facility also utilizes leakless or low emission pumps. The LDAR programs identified in the database included various federal NSPS and NESHAP programs and TCEQ LDAR programs, including the 28LAER program. The 28LAER LDAR program is at least as stringent as the referenced federal rule programs in the database, and is therefore determined to be equivalent to the top level of control for similar facilities, which is more stringent than BACT requirements and satisfies LAER.

US EPA ARCHIVE DOCUMENT

6.4 Tanks

The new tanks that will be in service to support the new Frac units will only store very low vapor pressure (<0.00001 psia) VOC liquids and wastewater containing trace amounts of VOC. Allowable VOC emissions for each of four amine tanks are less than 0.000001 tpy each, and allowable VOC emissions for each of two wastewater tanks are conservatively estimated to be 0.03 tpy or less. Due to the negligible quantity of emissions from these tanks, add-on controls would not result in any quantifiable emission reduction; therefore, use of fixed roof tanks and low annual throughput is considered to be LAER for the proposed tanks.

6.5 Flare

It was concluded that a flare is the only technically feasible control option for vent streams at the proposed Frac and DIB units. The flare will be designed and operated consistent with the TCEQ's BACT guidance as outlined in *Air Permit Technical Guidance for Chemical Sources: Flares and Thermal Oxidizers, October 2000 (Draft)*, which specifies that all flares shall comply with the requirements in NSPS, Subpart A, Section 60.18.

The flare will be:

- Designed to maintain the maximum tip velocity and heating value requirements in NSPS Subpart A, Section 60.18 to ensure flame stability and sufficient destruction efficiency;
- Equipped with a continuously burning pilot;
- Equipped with a pilot monitoring system and an automatic re-ignition system;
- Equipped with a remote infrared flame monitor to ensure flame integrity;
- Equipped with a liquid knockout drum to remove any water and condensables from the gas stream prior to flaring; and
- Designed for smokeless operation.

The flare will result in emissions of CO, NO_x, VOC, SO_2, and reduced sulfur compounds. BACT or LAER, as applicable, for each of these pollutants is addressed below. An RBLC database search for flare controls was conducted and is summarized in Table C-6.

6.5.1 SO_2

The flare converts sulfur compounds in the waste gas streams to SO_2; therefore, proper operation of the flare inherently results in SO_2 emissions due to the intended destruction of the

US EPA ARCHIVE DOCUMENT

reduced sulfur compounds. This destruction efficiency will be met by operating the flare in accordance with the specifications for flares in NSPS, Subpart A, 60.18 as described previously. These design and operating methods satisfy BACT for SO_2.

6.5.2 CO

CO will be the primary pollutant emitted by the flare as CO is produced from incomplete combustion of carbon compounds. Enterprise proposes to minimize CO emissions through the use of a well-designed elevated flare capable of achieving a high VOC destruction efficiency that will also ensure that CO production is minimized. The RBLC database search results in Table C-6 indicate no control strategies for minimizing CO from flares other than proper flare design and operation, and operating the flare in accordance with Section 60.18 of Subpart A of NSPS.

Proper flare design includes specification to maintain availability and efficiency. Enterprise will maintain the flame integrity through the implementation of good combustion practices and flame detection monitoring with an automatic re-ignition system and designing and operating the flare in accordance with NSPS Subpart A, 60.18. Since the combustion efficiency (i.e., destruction/removal efficiency) of a flare is primarily influenced by temperature, residence time, and the mixing of air and process gases in the combustion zone, implementation of these design considerations and use of a natural gas/syngas-fired pilot flame will support a flare design that maximizes efficiency and minimizes incomplete combustion. These design requirements satisfy BACT.

6.5.3 NO_x

NO_x emissions from the flare are the result of thermal NO_x formation due to elemental nitrogen in the air. The flared gas streams will not contain any significant nitrogen compounds other than elemental nitrogen; therefore, no “fuel NO_x” will be produced. As with CO, NO_x emissions will be minimized primarily by minimizing the amount of flaring to the extent possible.

Because the above practices are the only available options for controlling NO_x emissions from flaring, they represent BACT. As such, the Enterprise will employ all of these design and operating measures for the proposed flare to satisfy the BACT requirement.

US EPA ARCHIVE DOCUMENT

6.5.4 VOC

Emissions of VOC must satisfy LAER requirements. VOC emissions from the flare are the result of incomplete combustion of VOC compounds in the flared gas streams. The RBLC database search results presented in Table C-6 indicate no control for VOC from flares other than proper design and operation of the flare as already described. VOC emissions will also be minimized by minimizing the amount of flaring to the extent possible.

As previously stated, the flare will be designed and operated consistent with the TCEQ's BACT guidance as outlined in *Air Permit Technical Guidance for Chemical Sources: Flares and Thermal Oxidizers, October 2000 (Draft)*, which specifies that all flares shall comply with the requirements in NSPS, Subpart A, Section 60.18. By satisfying these and additional design requirements, the flare that will be used for this project is designed to achieve a minimum destruction efficiency of 99.5%. Because the above practices are the only available options for controlling VOC emissions from flaring, they represent LAER as well as BACT. As such, Enterprise will employ all of these design and operating measures for the proposed flare to satisfy the LAER requirement.

US EPA ARCHIVE DOCUMENT

Section 7
Federal NSR Applicability

The Enterprise Mont Belvieu Complex is a major source for emissions of volatile organic compounds (VOC), nitrogen oxides (NO_x), sulfur dioxide (SO_2), particulate matter less than ten microns (PM_{10}), particulate matter less than 2.5 microns ($PM_{2.5}$), and carbon monoxide (CO). The Chambers County area is designated as attainment for all criteria pollutants except ozone. Prevention of Significant Deterioration (PSD) permitting is required for a modification of an existing major source for each attainment pollutant and other regulated pollutants for which the modification will result in a significant net emissions increase. Nonattainment New Source Review (NNSR) permitting is applicable to VOC because there will be a significant net increase in VOC emissions, and VOC is considered to be a precursor to ozone.

The first step in determining if the modification will result in a significant net emissions increase is to calculate the emissions increases due to the project, without consideration of any project emissions decreases. If the project emissions increases exceed the "netting" threshold for a pollutant, the second step is triggered for that pollutant. If the project increase does not exceed the netting threshold, PSD/NNSR does not apply to the pollutant.

In the second step, all other creditable emissions increases and decreases at the site that have occurred in the contemporaneous period are summed together with the project increases determined in the first step. The net emissions increase is then compared to the applicable significant emission rate level for the pollutant, and if exceeded, the project is subject to PSD/NNSR review for that pollutant. If not, PSD/NNSR is not applicable.

7.1 Step 1: Determine Project Emissions Increases

Project emissions increases must be considered for each new and modified facility and for any affected facility. An affected facility is an existing facility at the site that is expected to experience an increase in actual emissions as a result of the project. The new and modified facilities associated with the project that emit air pollutants regulated by the PSD/NNSR program include:

- The exhaust from the four new heaters (NO_x, CO, VOC, $PM/PM_{10}/PM_{2.5}$, SO_2),
- The new process fugitives associated with piping changes and additions (VOC),

US EPA ARCHIVE DOCUMENT

- The emissions from drift from the four new cooling towers ($PM/PM_{10}/PM_{2.5}$),
- Emissions from the six new storage tanks (VOC), and
- Emissions increases from process vents routed to a new (SK25.001) (VOC, CO, NO_x, and SO_2).

The project emissions increases are summarized in TCEQ Tables 1F, 2F, and 3F and compared to the PSD/NNSR netting thresholds. Supporting emissions calculations are contained in Appendix B. As can be seen, the total project increases are above the netting thresholds for NO_x, CO, and VOC; therefore, emissions netting was required for these pollutants.

The project will also result in an increase in Greenhouse Gas (GHG) emissions above the 75,000 tpy CO_2 equivalent (CO_2e) PSD netting threshold. Permitting of GHG emissions in Texas is currently conducted by the USEPA Region IV; therefore, a separate permit application will be submitted to USEPA addressing PSD applicability for GHG emissions and the required analyses..

7.2 Step 2: Determine Net Emissions Increases

Because Step 1 resulted in project emissions increases exceeding the PSD netting thresholds for CO, Step 2, determination of net emissions increase, was required for this pollutant. After inclusion of all emissions increases and decreases in the contemporaneous period, the net emissions increases exceeded the PSD applicability threshold; therefore, PSD review is required for CO.

Because Step 1 resulted in project emissions increases exceeding the NNSR netting thresholds for VOC and NO_x, Step 2, determination of net emissions increase, was required for these pollutants. After inclusion of all emissions increases and decreases in the contemporaneous period, the net VOC emissions increases exceeded the NNSR applicability threshold; therefore, NNSR is required for VOC. After inclusion of all emissions increases and decreases in the contemporaneous period, the net NO_x emissions increases did not exceed the NNSR applicability threshold; therefore, NNSR is not required for NO_x.

US EPA ARCHIVE DOCUMENT

TABLE 1F
AIR QUALITY APPLICATION SUPPLEMENT

Permit No.: **10091**	Application Submittal Date:	**December 2011 (Revised May 2012)**
Company: **Enterprise Products Operating LLC**		
RN: **102323268**	Facility Location: **10207 FM 1942**	
City: **Mont Belvieu**	County: **Chambers**	
Permit Unit I.D.: **Eagleford Fractionation Unit**	Permit Name: **Mont Belvieu Complex**	
Permit Activity: New Source ___ Modification **X**		
Project or Process Description: **Eagleford Fractionation Units and DIB Unit**		

Complete for all Pollutants with a Project Emission Increase.	POLLUTANTS											
	Ozone		CO	PM	PM_{10}	$PM_{2.5}$	NO_x	SO_2	H_2S	TRS	Pb	Other[1]
	VOC	NO_x										
Nonattainment? (yes or no)	**Yes**	**Yes**	**No**	**No**	**No**	**No**	**No**	**No**	**NA**	**NA**	**No**	**NA**
Existing site PTE (tpy)?	**>100**	**>100**	**>250**				**>250**					
Proposed project emission increases (tpy from 2F)[2]	**13.0**	**51.9**	**111.1**	**9.7**	**8.6**	**7.1**	**51.9**	**12.8**	**0.0**	**0.0**	**0.00**	
Is the existing site a major source? [3]If not, is the project a major source by itself?	**NA**	**NA**	**NA**	**NA**	**NA**	**NA**	**NA**	**NA**	**NA**	**NA**	**NA**	**NA**
Significance Level (tpy)	**5**	**5**	**100**	**25**	**15**	**10**	**40**	**40**	**10**	**10**	**0.6**	
If site is major, is project increase significant?	**Yes**	**Yes**	**Yes**	**No**	**No**	**No**	**Yes**	**No**	**No**	**No**	**No**	**No**
If netting required, estimated start of construction?	**1-Nov-12**											
Five years prior to start of construction	**1-Nov-07**								contemporaneous			
Estimated start of operation	**1-Nov-13**								period			
Net contemporaneous change, including proposed project, from Table 3F. (tpy)	**39.9**	**7.4**	**322.7**	**NA**	**NA**	**NA**	**7.4**	**NA**	**NA**	**NA**	**NA**	**NA**
FNSR APPLICABLE? (yes or no)	**Yes**	**No**	**Yes**	**No**	**No**	**No**	**No**	**No**	**No**	**No**	**No**	**No**

1 Other PSD pollutants.
2 Sum of proposed emissions minus baseline emissions, increases only. Nonattainment thresholds are found in Table 1 in 30 TAC 116.12(11) and PSD thresholds in 40 CFR § 51.166(b)(23).
3 Nonattainment major source is defined in Table 1 in 30 TAC 116.12(11) by pollutant and county. PSD thresholds are found in 40 CFR § 51.166(b)(1).

The representations made above and on the accompanying tables are true and correct to the best of my knowledge.

Senior Vice President

Signature | Title | Date

TCEQ - 10154 (Revised 10/08) Table 1F
These forms are for use by facilities subject to air quality permit requirements and may be revised periodically. (APDG 5912v1)

US EPA ARCHIVE DOCUMENT

US EPA ARCHIVE DOCUMENT

TABLE 2F
PROJECT EMISSION INCREASE

Pollutant[1]:	**VOC**	**Permit No.:**	**10091**
Baseline Period:	**NA**	**Project Name:**	**Eagleford Fractionation Unit**

	Affected or Modified Facilities[2]			Permit No.	Actual Emissions[3] (tons/yr)	A Baseline Emissions[4] (tons/yr)	B Proposed Emissions[5] (tons/yr)	Projected Actual Emissions (tons/yr)	Difference (B-A)[6] (tons/yr)	Correction[7] (tons/yr)	Project Increase[8] (tons/yr)
	FIN	EPN	Facility Name								
1	HR15.001A	HR15.001A	Hot Oil Heater	10091		-	1.23		1.23	-	1.23
2	HR15.001B	HR15.001B	Hot Oil Heater	10091		-	1.23		1.23	-	1.23
3	HR15.002A	HR15.002A	Regenerant Heater	10091		-	0.25		0.25	-	0.25
4	HR15.002B	HR15.002B	Regenerant Heater	10091		-	0.25		0.25	-	0.25
5	HT16.028A	HT16.028A	Refrigerant Condenser	10091		-	-		-	-	-
6	HT16.028B	HT16.028B	Refrigerant Condenser	10091		-	-		-	-	-
7	HT16.029A	HT16.029A	Reflux Cooler	10091		-	-		-	-	-
8	HT16.029B	HT16.029B	Reflux Cooler	10091		-	-		-	-	-
9	SV19.003A	SV19.003A	Lean Amine Tank	10091	-	-	2.49E-07	0.00	0.00	-	0.00
10	SV19.003B	SV19.003B	Lean Amine Tank	10091	-	-	2.49E-07	0.00	0.00	-	0.00
11	SV19.002A	SV19.002A	Amine Tank	10091	-	-	2.49E-07	0.00	0.00	-	0.00
12	SV19.002B	SV19.002B	Amine Tank	10091	-	-	2.49E-07	0.00	0.00	-	0.00
13	SV19.006A	SV19.006A	Wastewater Tank	10091	-	-	0.03	0.03	0.03	-	0.03
14	SV19.006B	SV19.006B	Wastewater Tank	10091	-	-	0.03	0.03	0.03	-	0.03
15	FRAC F EFa	FRAC F EFa	Process Fugitives	10091	-	-	2.00	2.00	2.00	-	2.00
16	FRAC F EFb	FRAC F EFb	Process Fugitives	10091	-	-	2.00	2.00	2.00	-	2.00
17	EFDIB-FUG	EFDIB-FUG	Process Fugitives	10091	-	-	1.61	1.61	1.61	-	1.61
18	SK25.001	SK25.001	Flare	10091	-	-	4.40	4.40	4.40	-	4.40
										Page Subtotal:	**13.03**
										Project Total:	**13.03**

*

US EPA ARCHIVE DOCUMENT

Table 3F
Project Contemporaneous Changes

Company: **Enterprise Products Operating LLC**

Criteria Pollutant: **VOC**

Permit Application No. **10091**

No.	PROJECT DATE	EMISSION UNIT AT WHICH REDUCTION OCCURED FIN	EPN	PERMIT NUMBER	PROJECT NAME OR ACTIVITY	A PROPOSED EMISSIONS (tons / year)	B BASELINE EMISSIONS (tons / year)	C DIFFERENCE (A-B) (tons / year)	CREDITABLE DECREASE OR INCREASE
1	8/27/2008		42	20698	Turbine uprate (Std. Prmt. 71200)	1.96	0.22	1.74	1.74
2	6/10/2009		CO1	5581	Revised emissions representation	5.26	0.55	4.72	4.72
3	6/10/2009		078FUG	5581	Revised emissions representation	7.26	3.57	3.69	3.69
4	6/10/2009		FWP1	5581	Added new fire water pump	0.05	0.00	0.05	0.05
5	6/10/2009		DTK1	5581	Added new storage tank	0.01	0.00	0.01	0.01
6	9/8/2008		PB-E, PB-N	PBR 85755	Added surface coating	3.76	0.00	3.76	3.76
7	9/8/2008		PB-E, PB-N	PBR 85755	Added solvent use	1.23	0.00	1.23	1.23
8	3/24/2009		Multiple	Std. Permit 87477	Frac Unit IV - Various EPNs	4.91	0.00	4.91	4.91
9	12/1/2010		Multiple	Std. Permit 93268	Frac Unit V - Various EPNs	2.10	0.00	2.10	2.10
10	1/1/2012		Multiple	Std. Permit 95777	Frac Unit VI - Various EPNs	4.64	0.00	4.64	4.64
11	11/1/2013	HR15.001A	HR15.001A	10091	Hot Oil Heater	1.23	0.00	1.23	1.23
12	11/1/2013	HR15.001B	HR15.001B	10091	Hot Oil Heater	1.23	0.00	1.23	1.23
13	11/1/2013	HR15.002A	HR15.002A	10091	Regenerant Heater	0.25	0.00	0.25	0.25
14	11/1/2013	HR15.002B	HR15.002B	10091	Regenerant Heater	0.25	0.00	0.25	0.25
15	11/1/2013	SV19.003A	SV19.003A	10091	Lean Amine Tank	2.49E-07	0.00	0.00	0.00
16	11/1/2013	SV19.003B	SV19.003B	10091	Lean Amine Tank	2.49E-07	0.00	0.00	0.00
17	11/1/2013	SV19.002A	SV19.002A	10091	Amine Tank	2.49E-07	0.00	0.00	0.00
18	11/1/2013	SV19.002B	SV19.002B	10091	Amine Tank	2.49E-07	0.00	0.00	0.00
19	11/1/2013	SV19.006A	SV19.006A	10091	Wastewater Tank	0.03	0.00	0.03	0.03
20	11/1/2013	SV19.006B	SV19.006B	10091	Wastewater Tank	0.03	0.00	0.03	0.03
21	11/1/2013	FRAC F EFa	FRAC F EFa	10091	Process Fugitives	2.00	0.00	2.00	2.00
22	11/1/2013	FRAC F EFb	FRAC F EFb	10091	Process Fugitives	2.00	0.00	2.00	2.00
23	11/1/2013	EFDIB-FUG	EFDIB-FUG	10091	Process Fugitives	1.61	0.00	1.61	1.61
24	11/1/2013	SK25.001	SK25.001	10091	Flare	4.40	0.00	4.40	4.40
								PAGE SUBTOTAL:	**39.87**
	Summary of Contemporaneous Changes							TOTAL :	**39.87**

US EPA ARCHIVE DOCUMENT

TABLE 2F
PROJECT EMISSION INCREASE

Pollutant[1]:	**NOx**	**Permit No.:**	**10091**
Baseline Period:	**NA**	**Project Name:**	**Eagleford Fractionation Unit**

	Affected or Modified Facilities[2]			Permit No.	Actual Emissions[3] (tons/yr)	Baseline Emissions[4] (tons/yr)	Proposed Emissions[5] (tons/yr)	Projected Actual Emissions (tons/yr)	Difference (B-A)[6] (tons/yr)	Correction[7] (tons/yr)	Project Increase[8] (tons/yr)
					A		B				
	FIN	EPN	Facility Name								
1	HR15.001A	HR15.001A	Hot Oil Heater	10091		-	15.33	15.33	15.33	-	15.33
2	HR15.001B	HR15.001B	Hot Oil Heater	10091		-	15.33	15.33	15.33	-	15.33
3	HR15.002A	HR15.002A	Regenerant Heater	10091		-	3.12	3.12	3.12	-	3.12
4	HR15.002B	HR15.002B	Regenerant Heater	10091		-	3.12	3.12	3.12	-	3.12
5	HT16.028A	HT16.028A	Refrigerant Condenser	10091		-	-	-	-	-	-
6	HT16.028B	HT16.028B	Refrigerant Condenser	10091		-	-	-	-	-	-
7	HT16.029A	HT16.029A	Reflux Cooler	10091			-	-	-	-	-
8	HT16.029B	HT16.029B	Reflux Cooler	10091	-	-	-	-	-	-	-
9	SV19.003A	SV19.003A	Lean Amine Tank	10091	-	-	-	-	-	-	-
10	SV19.003B	SV19.003B	Lean Amine Tank	10091	-	-	-	-	-	-	-
11	SV19.002A	SV19.002A	Amine Tank	10091	-	-	-	-	-	-	-
12	SV19.002B	SV19.002B	Amine Tank	10091	-	-	-	-	-	-	-
13	SV19.006A	SV19.006A	Wastewater Tank	10091	-	-	-	-	-	-	-
14	SV19.006B	SV19.006B	Wastewater Tank	10091	-	-	-	-	-	-	-
15	FRAC F EFa	FRAC F EFa	Process Fugitives	10091	-	-	-	-	-	-	-
16	FRAC F EFb	FRAC F EFb	Process Fugitives	10091	-	-	-	-	-	-	-
17	EFDIB-FUG	EFDIB-FUG	Process Fugitives	10091	-	-	-	-	-	-	-
18	SK25.001	SK25.001	Flare	10091	-	-	14.99	14.99	14.99	-	14.99
										Page Subtotal:	**51.89**
										Project Total:	**51.89**

US EPA ARCHIVE DOCUMENT

Table 3F
Project Contemporaneous Changes

Company: **Enterprise Products Operating LLC**

Criteria Pollutant: **NOx**

Permit Application No. **10091**

No.	PROJECT DATE	EMISSION UNIT AT WHICH REDUCTION OCCURED FIN	EPN	PERMIT NUMBER	PROJECT NAME OR ACTIVITY	A PROPOSED EMISSIONS (tons / year)	B BASELINE EMISSIONS (tons / year)	C DIFFERENCE (A-B) (tons / year)	CREDITABLE DECREASE OR INCREASE
1	January 1, 2008	TURB/SCR	42	20698	Turbine Modification (Solar T-16000 101CM12101)	20.28	13.37	6.91	6.91
2	Dec 2009	FWP1	FWP1	5581	430-hp Diesel Firewater Pump Engine Addition	0.66	0.00	0.66	0.66
3	Dec 2009	FWP2	FWP2	106.511 (PBR)	230-hp Diesel Firewater Pump Engine Addition	0.36	0.00	0.36	0.36
4	Dec 2009	FWP3	FWP3	106.511 (PBR)	368-hp Diesel Firewater Pump Engine Addition	0.57	0.00	0.57	0.57
5	Dec 2009	FWP4	FWP4	106.511 (PBR)	430-hp Diesel Firewater Pump Engine Addition	0.66	0.00	0.66	0.66
6	May,2009	HR 15.001	HR 15.001	87477 (Std Permit)	Frac IV Hot Oil Heater Addition (140 MMBtu/hr @0.025 lb/MMBtu)	15.33	0.00	15.33	15.33
7	May,2009	HR 15.002	HR 15.002	87477 (Std Permit)	Frac IV Regen Heater Addition (28.5 MMBtu/hr @0.025 lb/MMBtu)	3.12	0.00	3.12	3.12
8	May,2009	FL-4	FL-4	87477 (Std Permit)	Frac IV Flare Addition	7.11	0.00	7.11	7.11
9	December, 2010	HR 16.001	HR 16.001	93268 (Std Permit)	Frac V Hot Oil Heater Addition (140 MMBtu/hr @0.025 lb/MMBtu)	15.33	0.00	15.33	15.33
10	December, 2010	HR 16.002	HR 16.002	93268 (Std Permit)	Frac V Regen Heater Addition (28.5 MMBtu/hr @0.025 lb/MMBtu)	3.12	0.00	3.12	3.12
11	December, 2010	FL-4	FL-4	87477 (Std Permit)	FRAC V Flare Mod (Shared Flare Frac 4, 5)	14.23	7.11	7.12	7.12
12	January 10, 2011	SHOH	SHOH	94065 (Std Permit)	South Heater	15.33	0.00	15.33	15.33
13	January 10, 2013	WTF-T4	WTF-T4	6798	Turbine Retrofit	17.82	73.52	-55.70	-55.70
14	2012 (Projected)	NDIB-FL	FL-4	94067 (PBR)	New North Plant DIB Contribution to Frac IV Flare	0.27	0.00	0.27	0.27
								PAGE SUBTOTAL:	20.19

US EPA ARCHIVE DOCUMENT

Table 3F
Project Contemporaneous Changes

Company: **Enterprise Products Operating LLC**

Criteria Pollutant: **NOx**

Permit Application No. **10091**

No.	PROJECT DATE	EMISSION UNIT AT WHICH REDUCTION OCCURED FIN	EPN	PERMIT NUMBER	PROJECT NAME OR ACTIVITY	A PROPOSED EMISSIONS (tons / year)	B BASELINE EMISSIONS (tons / year)	C DIFFERENCE (A-B) (tons / year)	CREDITABLE DECREASE OR INCREASE
15	2012 (Projected)	SEM-TRFRG1	10/11	8707	Chiller Installation	42.25	39.86	2.39	2.39
16	2012 (Projected)	SEM-TRFRG2	10/11	8707	Chiller Installation	42.25	39.86	2.39	2.39
17	2012 (Projected)	HR 17.001	HR 17.001	95777 (Std Permit)	Frac VI Hot Oil Heater Addition	15.33	0.00	15.33	15.33
18	2012 (Projected)	HR 17.002	HR 17.002	95777 (Std Permit)	Frac VI Regen Heater Addition	3.12	0.00	3.12	3.12
19	2012 (Projected)	FL-4	FL-4	95777 (Std Permit)	FRAC VI Flare Mod (Shared Flare Frac 4, 5, 6)	21.33	14.22	7.11	7.11
20	2012 (Projected)	WTF-T4	WTF-T4	6798	Turbine Replacement and HRU ann. firing increase	26.64	23.52	3.12	3.12
21	2012 (Projected)	Cogen 3 Turb 1, 2, 3	61	22113	Turbine firing rate increase	59.24	54.66	4.58	4.58
22	Prior to Startup of Frac VI	P/P1-T1	1	Std. Permit TBD	Upgrade P/P SR Saturn to 25 ppmv	17.79	31.01	-13.22	-13.22
23	Prior to Startup of Frac VI	P/P1-T2	1	Std. Permit TBD	Upgrade P/P SR Saturn to 25 ppmv	17.79	31.01	-13.22	-13.22
24	Prior to Startup of Frac VI	WTF-T23	2/3	Std. Permit TBD	Upgrade WTX Centaur to 25 ppmv	17.79	31.01	-13.22	-13.22
25	November, 2013	HR15.001A	HR15.001A	10091	Eagleford Frac Project Hot Oil Heater	15.33	0.00	15.33	15.33
26	November, 2013	HR15.001B	HR15.001B	10091	Eagleford Frac Project Hot Oil Heater	15.33	0.00	15.33	15.33
27	November, 2013	HR15.002A	HR15.002A	10091	Eagleford Frac Project Regenerant Heater	3.12	0.00	3.12	3.12
28	November, 2013	HR15.002B	HR15.002B	10091	Eagleford Frac Project Regenerant Heater	3.12	0.00	3.12	3.12
29	November, 2013	SK25.001	SK25.001	10091	Eagleford Frac Flare Mod (Flare)	14.99	0.00	14.99	14.99
30	November, 2013	TBD	TBD	Std. Permit TBD	Eagleford Frac Turbine NOx Reduction Project	91.98	155.02	-63.04	-63.04
								PAGE SUBTOTAL:	-12.77
	Summary of Contemporaneous Changes							TOTAL :	**7.42**

US EPA ARCHIVE DOCUMENT

TABLE 2F
PROJECT EMISSION INCREASE

Pollutant[1]:	**CO**	**Permit No.:**	**10091**
Baseline Period:	**NA**	**Project Name:**	**Eagleford Fractionation Unit**

	Affected or Modified Facilities[2]			Permit No.	Actual Emissions[3] (tons/yr)	A Baseline Emissions[4] (tons/yr)	B Proposed Emissions[5] (tons/yr)	Projected Actual Emissions (tons/yr)	Difference (B-A)[6] (tons/yr)	Correction[7] (tons/yr)	Project Increase[8] (tons/yr)
	FIN	EPN	Facility Name								
1	HR15.001A	HR15.001A	Hot Oil Heater	10091		-	27.36	27.36	27.36	-	27.36
2	HR15.001B	HR15.001B	Hot Oil Heater	10091		-	27.36	27.36	27.36	-	27.36
3	HR15.002A	HR15.002A	Regenerant Heater	10091		-	5.57	5.57	5.57	-	5.57
4	HR15.002B	HR15.002B	Regenerant Heater	10091		-	5.57	5.57	5.57	-	5.57
5	HT16.028A	HT16.028A	Refrigerant Condenser	10091		-	-	-	-	-	-
6	HT16.028B	HT16.028B	Refrigerant Condenser	10091		-	-	-	-	-	-
7	HT16.029A	HT16.029A	Reflux Cooler	10091			-	-	-	-	-
8	HT16.029B	HT16.029B	Reflux Cooler	10091	-	-	-	-	-	-	-
9	SV19.003A	SV19.003A	Lean Amine Tank	10091	-	-	-	-	-	-	-
10	SV19.003B	SV19.003B	Lean Amine Tank	10091	-	-	-	-	-	-	-
11	SV19.002A	SV19.002A	Amine Tank	10091	-	-	-	-	-	-	-
12	SV19.002B	SV19.002B	Amine Tank	10091	-	-	-	-	-	-	-
13	SV19.006A	SV19.006A	Wastewater Tank	10091	-	-	-	-	-	-	-
14	SV19.006B	SV19.006B	Wastewater Tank	10091	-	-	-	-	-	-	-
15	FRAC F EFa	FRAC F EFa	Process Fugitives	10091	-	-	-	-	-	-	-
16	FRAC F EFb	FRAC F EFb	Process Fugitives	10091	-	-	-	-	-	-	-
17	EFDIB-FUG	EFDIB-FUG	Process Fugitives	10091	-	-	-	-	-	-	-
18	SK25.001	SK25.001	Flare	10091	-	-	45.19	45.19	45.19	-	45.19
										Page Subtotal:	**111.05**
										Project Total:	**111.05**

US EPA ARCHIVE DOCUMENT

Table 3F
Project Contemporaneous Changes

Company: **Enterprise Products Operating LLC**

Criteria Pollutant: **CO**

Permit Application No. **10091**

No.	PROJECT DATE	EMISSION UNIT AT WHICH REDUCTION OCCURED FIN	EPN	PERMIT NUMBER	PROJECT NAME OR ACTIVITY	A PROPOSED EMISSIONS (tons / year)	B BASELINE EMISSIONS (tons / year)	C DIFFERENCE (A-B) (tons / year)	CREDITABLE DECREASE OR INCREASE
1	January 1, 2008	TURB/SCR	42	20698	Turbine Modification (Solar T-16000 101CM12101)	19.21	13.28	5.93	5.93
2	Dec 2009	FWP1	FWP1	5581	430-hp Diesel Firewater Pump Engine Addition	0.66	0	0.66	0.66
3	Dec 2009	FWP2	FWP2	106.511 (PBR)	230-hp Diesel Firewater Pump Engine Addition	0.36	0	0.36	0.36
4	Dec 2009	FWP3	FWP3	106.511 (PBR)	368-hp Diesel Firewater Pump Engine Addition	0.57	0	0.57	0.57
5	Dec 2009	FWP4	FWP4	106.511 (PBR)	430-hp Diesel Firewater Pump Engine Addition	0.66	0	0.66	0.66
6	May,2009	HR 15.001	HR 15.001	87477 (Std Permit)	Frac IV Hot Oil Heater Addition (140 MMBtu/hr @0.025 lb/MMBtu)	27.4	0	27.40	27.40
7	May,2009	HR 15.002	HR 15.002	87477 (Std Permit)	Frac IV Regen Heater Addition (28.5 MMBtu/hr @0.025 lb/MMBtu)	5.57	0	5.57	5.57
8	May,2009	FL-4	FL-4	87477 (Std Permit)	Frac IV Flare Addition	21.4	0	21.40	21.40
9	December, 2010	HR 16.001	HR 16.001	93268 (Std Permit)	Frac V Hot Oil Heater Addition (140 MMBtu/hr @0.025 lb/MMBtu)	27.4	0	27.40	27.40
10	December, 2010	HR 16.002	HR 16.002	93268 (Std Permit)	Frac V Regen Heater Addition (28.5 MMBtu/hr @0.025 lb/MMBtu)	5.57	0	5.57	5.57
11	December, 2010	FL-4	FL-4	87477 (Std Permit)	FRAC V Flare Mod (Shared Flare Frac 4, 5)	42.9	21.4	21.50	21.50
12	January 10, 2011	SHOH	SHOH	94065 (Std Permit)	South Heater	27.4	0	27.40	27.40
13	2012 (Projected)	NDIB-FL	FL-4	94067 (PBR)	New North Plant DIB Contribution to Frac IV Flare	0.81	0	0.81	0.81
								PAGE SUBTOTAL:	145.23

US EPA ARCHIVE DOCUMENT

Table 3F
Project Contemporaneous Changes

Company: **Enterprise Products Operating LLC**

Criteria Pollutant: **CO**

Permit Application No. **10091**

No.	PROJECT DATE	EMISSION UNIT AT WHICH REDUCTION OCCURED FIN	EPN	PERMIT NUMBER	PROJECT NAME OR ACTIVITY	A PROPOSED EMISSIONS (tons / year)	B BASELINE EMISSIONS (tons / year)	C DIFFERENCE (A-B) (tons / year)	CREDITABLE DECREASE OR INCREASE
14	2012 (Projected)	SEM-TRFRG1	10/11	8707	Chiller Installation	32.07	29.24	2.83	2.83
15	2012 (Projected)	SEM-TRFRG2	10/11	8707	Chiller Installation	32.07	29.24	2.83	2.83
16	2012 (Projected)	HR 17.001	HR 17.001	95777 (Std Permit)	Frac VI Hot Oil Heater Addition	27.4	0	27.40	27.40
17	2012 (Projected)	HR 17.002	HR 17.002	95777 (Std Permit)	Frac VI Regen Heater Addition	5.57	0	5.57	5.57
18	2012 (Projected)	FL-4	FL-4	95777 (Std Permit)	FRAC VI Flare Mod (Shared Flare Frac 4, 5, 6)	64.3	42.9	21.40	21.40
19	2012 (Projected)	WTF-T4	WTF-T4	6798	Turbine Replacement and HRU ann. firing increase	30.44	29.72	0.72	0.72
20	2012 (Projected)	Cogen 3 Turb 1, 2, 3	61	22113	Turbine firing rate increase	73.14	67.5	5.64	5.64
21	November, 2013	HR15.001A	HR15.001A	10091	Eagleford Frac Project Hot Oil Heater	27.361	0	27.36	27.36
22	November, 2013	HR15.001B	HR15.001B	TBD	Eagleford Frac Project Hot Oil Heater	27.361	0	27.36	27.36
23	November, 2013	HR15.002A	HR15.002A	TBD	Eagleford Frac Project Regenerant Heater	5.570	0	5.57	5.57
24	November, 2013	HR15.002B	HR15.002B	TBD	Eagleford Frac Project Regenerant Heater	5.570	0	5.57	5.57
25	November, 2013	SK25.001	SK25.001	TBD	Eagleford Frac Flare Mod (Flare)	45.190	0	45.19	45.19
								PAGE SUBTOTAL:	177.44
	Summary of Contemporaneous Changes							TOTAL :	**322.67**

US EPA ARCHIVE DOCUMENT

TABLE 2F
PROJECT EMISSION INCREASE

Pollutant[1]:	**PM**	**Permit No.:**	**10091**
Baseline Period:	**NA**	**Project Name:**	**Eagleford Fractionation Unit**

	Affected or Modified Facilities[2]			Permit No.	Actual Emissions[3] (tons/yr)	Baseline Emissions[4] (tons/yr)	Proposed Emissions[5] (tons/yr)	Projected Actual Emissions (tons/yr)	Difference (B-A)[6] (tons/yr)	Correction[7] (tons/yr)	Project Increase[8] (tons/yr)
					A		B				
	FIN	EPN	Facility Name								
1	HR15.001A	HR15.001A	Hot Oil Heater	10091		-	2.45	2.45	2.45	-	2.45
2	HR15.001B	HR15.001B	Hot Oil Heater	10091		-	2.45	2.45	2.45	-	2.45
3	HR15.002A	HR15.002A	Regenerant Heater	10091		-	0.62	0.62	0.62	-	0.62
4	HR15.002B	HR15.002B	Regenerant Heater	10091		-	0.62	0.62	0.62	-	0.62
5	HT16.028A	HT16.028A	Refrigerant Condenser	10091		-	1.44	1.44	1.44	-	1.44
6	HT16.028B	HT16.028B	Refrigerant Condenser	10091		-	1.44	1.44	1.44	-	1.44
7	HT16.029A	HT16.029A	Reflux Cooler	10091			0.34	0.34	0.34	-	0.34
8	HT16.029B	HT16.029B	Reflux Cooler	10091	-	-	0.34	0.34	0.34	-	0.34
9	SV19.003A	SV19.003A	Lean Amine Tank	10091	-	-	-	-	-	-	-
10	SV19.003B	SV19.003B	Lean Amine Tank	10091	-	-	-	-	-	-	-
11	SV19.002A	SV19.002A	Amine Tank	10091	-	-	-	-	-	-	-
12	SV19.002B	SV19.002B	Amine Tank	10091	-	-	-	-	-	-	-
13	SV19.006A	SV19.006A	Wastewater Tank	10091	-	-	-	-	-	-	-
14	SV19.006B	SV19.006B	Wastewater Tank	10091	-	-	-	-	-	-	-
15	FRAC F EFa	FRAC F EFa	Process Fugitives	10091	-	-	-	-	-	-	-
16	FRAC F EFb	FRAC F EFb	Process Fugitives	10091	-	-	-	-	-	-	-
17	EFDIB-FUG	EFDIB-FUG	Process Fugitives	10091	-	-	-	-	-	-	-
18	SK25.001	SK25.001	Flare	10091	-	-	-	-	-	-	-
										Page Subtotal:	**9.73**
										Project Total:	**9.73**

US EPA ARCHIVE DOCUMENT

TABLE 2F
PROJECT EMISSION INCREASE

Pollutant[1]:	**PM10**	**Permit No.:**	**10091**
Baseline Period:	**NA**	**Project Name:**	**Eagleford Fractionation Unit**

	Affected or Modified Facilities[2]			Permit No.	Actual Emissions[3] (tons/yr)	Baseline Emissions[4] (tons/yr)	Proposed Emissions[5] (tons/yr)	Projected Actual Emissions (tons/yr)	Difference (B-A)[6] (tons/yr)	Correction[7] (tons/yr)	Project Increase[8] (tons/yr)
					A		B				
	FIN	EPN	Facility Name								
1	HR15.001A	HR15.001A	Hot Oil Heater	10091		-	2.45	2.45	2.45	-	2.45
2	HR15.001B	HR15.001B	Hot Oil Heater	10091		-	2.45	2.45	2.45	-	2.45
3	HR15.002A	HR15.002A	Regenerant Heater	10091		-	0.62	0.62	0.62	-	0.62
4	HR15.002B	HR15.002B	Regenerant Heater	10091		-	0.62	0.62	0.62	-	0.62
5	HT16.028A	HT16.028A	Refrigerant Condenser	10091		-	0.99	0.99	0.99	-	0.99
6	HT16.028B	HT16.028B	Refrigerant Condenser	10091		-	0.99	0.99	0.99	-	0.99
7	HT16.029A	HT16.029A	Reflux Cooler	10091			0.23	0.23	0.23	-	0.23
8	HT16.029B	HT16.029B	Reflux Cooler	10091	-	-	0.23	0.23	0.23	-	0.23
9	SV19.003A	SV19.003A	Lean Amine Tank	10091	-	-	-	-	-	-	-
10	SV19.003B	SV19.003B	Lean Amine Tank	10091	-	-	-	-	-	-	-
11	SV19.002A	SV19.002A	Amine Tank	10091	-	-	-	-	-	-	-
12	SV19.002B	SV19.002B	Amine Tank	10091	-	-	-	-	-	-	-
13	SV19.006A	SV19.006A	Wastewater Tank	10091	-	-	-	-	-	-	-
14	SV19.006B	SV19.006B	Wastewater Tank	10091	-	-	-	-	-	-	-
15	FRAC F EFa	FRAC F EFa	Process Fugitives	10091	-	-	-	-	-	-	-
16	FRAC F EFb	FRAC F EFb	Process Fugitives	10091	-	-	-	-	-	-	-
17	EFDIB-FUG	EFDIB-FUG	Process Fugitives	10091	-	-	-	-	-	-	-
18	SK25.001	SK25.001	Flare	10091	-	-	-	-	-	-	-
										Page Subtotal:	**8.59**
										Project Total:	**8.59**

US EPA ARCHIVE DOCUMENT

TABLE 2F
PROJECT EMISSION INCREASE

Pollutant[1]:	**PM2.5**	**Permit No.:**	**10091**
Baseline Period:	**NA**	**Project Name:**	**Eagleford Fractionation Unit**

	Affected or Modified Facilities[2]			Permit No.	Actual Emissions[3] (tons/yr)	Baseline Emissions[4] (tons/yr)	Proposed Emissions[5] (tons/yr)	Projected Actual Emissions (tons/yr)	Difference (B-A)[6] (tons/yr)	Correction[7] (tons/yr)	Project Increase[8] (tons/yr)
						A	B				
	FIN	EPN	Facility Name								
1	HR15.001A	HR15.001A	Hot Oil Heater	10091		-	2.45	2.45	2.45	-	2.45
2	HR15.001B	HR15.001B	Hot Oil Heater	10091		-	2.45	2.45	2.45	-	2.45
3	HR15.002A	HR15.002A	Regenerant Heater	10091		-	0.62	0.62	0.62	-	0.62
4	HR15.002B	HR15.002B	Regenerant Heater	10091		-	0.62	0.62	0.62	-	0.62
5	HT16.028A	HT16.028A	Refrigerant Condenser	10091		-	0.38	0.38	0.38	-	0.38
6	HT16.028B	HT16.028B	Refrigerant Condenser	10091		-	0.38	0.38	0.38	-	0.38
7	HT16.029A	HT16.029A	Reflux Cooler	10091			0.09	0.09	0.09	-	0.09
8	HT16.029B	HT16.029B	Reflux Cooler	10091	-	-	0.09	0.09	0.09	-	0.09
9	SV19.003A	SV19.003A	Lean Amine Tank	10091	-	-	-	-	-	-	-
10	SV19.003B	SV19.003B	Lean Amine Tank	10091	-	-	-	-	-	-	-
11	SV19.002A	SV19.002A	Amine Tank	10091	-	-	-	-	-	-	-
12	SV19.002B	SV19.002B	Amine Tank	10091	-	-	-	-	-	-	-
13	SV19.006A	SV19.006A	Wastewater Tank	10091	-	-	-	-	-	-	-
14	SV19.006B	SV19.006B	Wastewater Tank	10091	-	-	-	-	-	-	-
15	FRAC F EFa	FRAC F EFa	Process Fugitives	10091	-	-	-	-	-	-	-
16	FRAC F EFb	FRAC F EFb	Process Fugitives	10091	-	-	-	-	-	-	-
17	EFDIB-FUG	EFDIB-FUG	Process Fugitives	10091	-	-	-	-	-	-	-
18	SK25.001	SK25.001	Flare	10091	-	-	-	-	-	-	-
										Page Subtotal:	**7.10**
										Project Total:	**7.10**

US EPA ARCHIVE DOCUMENT

TABLE 2F
PROJECT EMISSION INCREASE

Pollutant[1]:	**SO2**	**Permit No.:**	**10091**
Baseline Period:	**NA**	**Project Name:**	**Eagleford Fractionation Unit**

	Affected or Modified Facilities[2]			Permit No.	Actual Emissions[3] (tons/yr)	A Baseline Emissions[4] (tons/yr)	B Proposed Emissions[5] (tons/yr)	Projected Actual Emissions (tons/yr)	Difference (B-A)[6] (tons/yr)	Correction[7] (tons/yr)	Project Increase[8] (tons/yr)
	FIN	EPN	Facility Name								
1	HR15.001A	HR15.001A	Hot Oil Heater	10091		-	1.52	1.52	1.52	-	1.52
2	HR15.001B	HR15.001B	Hot Oil Heater	10091		-	1.52	1.52	1.52	-	1.52
3	HR15.002A	HR15.002A	Regenerant Heater	10091		-	0.31	0.31	0.31	-	0.31
4	HR15.002B	HR15.002B	Regenerant Heater	10091		-	0.31	0.31	0.31	-	0.31
5	HT16.028A	HT16.028A	Refrigerant Condenser	10091		-		-	-	-	-
6	HT16.028B	HT16.028B	Refrigerant Condenser	10091		-		-	-	-	-
7	HT16.029A	HT16.029A	Reflux Cooler	10091		-		-	-	-	-
8	HT16.029B	HT16.029B	Reflux Cooler	10091	-	-		-	-	-	-
9	SV19.003A	SV19.003A	Lean Amine Tank	10091	-	-		-	-	-	-
10	SV19.003B	SV19.003B	Lean Amine Tank	10091	-	-		-	-	-	-
11	SV19.002A	SV19.002A	Amine Tank	10091	-	-		-	-	-	-
12	SV19.002B	SV19.002B	Amine Tank	10091	-	-		-	-	-	-
13	SV19.006A	SV19.006A	Wastewater Tank	10091	-	-		-	-	-	-
14	SV19.006B	SV19.006B	Wastewater Tank	10091	-	-		-	-	-	-
15	FRAC F EFa	FRAC F EFa	Process Fugitives	10091	-	-		-	-	-	-
16	FRAC F EFb	FRAC F EFb	Process Fugitives	10091	-	-		-	-	-	-
17	EFDIB-FUG	EFDIB-FUG	Process Fugitives	10091	-	-		-	-	-	-
18	SK25.001	SK25.001	Flare	10091	-	-	9.18	9.18	9.18	-	9.18
										Page Subtotal:	**12.83**
										Project Total:	**12.83**

Section 8
General Application Requirements

This section addresses each of the general application requirements as specified in 30 TAC §116.111 for New Source Review permit amendments.

Protection of Public Health and Welfare - 30 TAC § 116.111(a)(2)(A)

As outlined below, the emissions from the facilities comply with all air quality rules and regulations and with the intent of the TCAA, including protection of the health and physical property of the people.

Chapter 101 - General Rules

The Enterprise facilities addressed in this application are operated in accordance with the General Rules relating to circumvention, nuisance, traffic hazard, notification requirements for major upsets, notification requirements for maintenance, sampling, sampling ports, emissions inventory requirements, sampling procedures, compliance with Environmental Protection Agency standards, the National Primary and Secondary Air Quality Standards, inspection fees, emissions fees, and all other applicable General Rules.

Chapter 111 - Visible Emissions and Particulate Matter

The emissions from the heaters and flare will comply with the applicable requirements of Chapter 111. Specifically, the heaters will comply with the opacity limits of §111.111(a)(1). During normal operations, the flare does not have visible emissions for more than 5 minutes in a two hour period as limited by 30 TAC 111.111(a)(4). The heater emissions will also comply with the allowable particulate matter emission rate specified in §111.151.

Chapter 112 - Sulfur Compounds

The concentrations of sulfur dioxide do not exceed the net ground level concentrations specified in by §112.3. The process does not emit sulfuric acid from sources included in this application, so the emission limits of §112.41 do not apply.

Chapter 113 - Toxic Materials

The Mont Belvieu Complex is a major source for hazardous air pollutants (HAPs); therefore, the facilities must comply with applicable requirements of Chapter 113. Chapter 113 regulates Radon Emissions from Phosphogypsum Stacks under the National Emission Standards for Hazardous Air Pollutants (40 CFR 61, Subpart R), maximum achievable control technology

US EPA ARCHIVE DOCUMENT

(MACT) standards under 40 CFR Part 63, municipal solid waste landfills, and hospital/ medical/infectious waste incinerators. The Mont Belvieu Complex does not contain facilities subject to these regulations.

Chapter 114 - Motor Vehicles

The Mont Belvieu Complex motor vehicle fleet is not being incorporated into this permit; therefore, this regulation does not apply. However, Enterprise complies with all applicable requirements of Chapter 114.

Chapter 115 - Volatile Organic Compounds (VOC)

Enterprise complies with the following applicable portions of Chapter 115.

The flare included in this application is utilized to comply with the control requirements of the following applicable divisions of Chapter 115:

Subchapter B: General VOC Sources, Division 2, Vent Gas Control;

Subchapter C: General VOC Transfer Operations, Division 1, Loading and Unloading of VOCs;

Subchapter D: Division 3, Fugitive Emission Control; and

Subchapter H: Highly-Reactive VOCs, Division 1, Vent Gas Control.

Chapter 117 - Nitrogen Compounds

The proposed heaters are subject to and will comply with applicable requirements of Chapter 117.

Chapter 122 – Federal Operating Permits

The facilities at the Mont Belvieu Complex are covered by Federal Operating Permit O-1641. The Operating permit will be revised as needed to incorporate the proposed changes.

Impact on Schools

There are no schools located within 3,000 feet of the facility.

Measurement of Emissions - 30 TAC § 116.111(a)(2)(B)

Emissions will be sampled upon request of the Executive Director of the TCEQ.

US EPA ARCHIVE DOCUMENT

Best Available Control Technology - 30 TAC § 116.111(a)(2)(C)

Section 6 of this application provides a description of the emissions controls used to control emissions from the facilities covered by this permit.

NSPS - 30 TAC § 116.111(a)(2)(D)

The following New Source Performance Standards (NSPS) as listed in 40 CFR Part 60 apply to sources covered by this permit amendment:

- Subpart A – General Provisions;
- Subpart Db – Standards of Performance for Industrial - Commercial - Institutional Seam Generating Units applies to the Hot Oil Heaters; and
- Subpart Dc – Standards of Performance for Small Industrial - Commercial - Institutional Seam Generating Units applies to the Regenerant Heaters.

The flare is used as control devices for facilities subject to NSPS requirements; therefore, the flare is subject to the requirements of 40 CFR §60.18 in Subpart A.

NESHAP - 30 TAC § 116.111(a)(2)(E)

The requirements of 40 CFR Part 61 do not apply to any sources at the Mont Belvieu Complex.

NESHAPS for Source Categories - 30 TAC § 116.111(a)(2)(F)

The Mont Belvieu Complex is a major source of HAPs and the proposed flare, which controls process vents subject to the Hazardous Organic NESHAP (HON) complies with the applicable portions of 40 CFR Part 63.

Performance Demonstration - 30 TAC § 116.111(a)(2)(G)

The facilities addressed in this permit application perform as represented in the application and as required by the permit.

Nonattainment Review - 30 TAC § 116.111(a)(2)(H)

Chambers County is a non-attainment area for ozone; and the net emissions increases of VOC exceed the NNSR applicability threshold; therefore, NNSR is required for VOC. The net emissions increase of NO_x will not exceed the NNSR applicability threshold; therefore, NNSR is not required for NO_x. Enterprise will apply LAER and obtain offsets for VOC as required by this rule.

US EPA ARCHIVE DOCUMENT

PSD Review – 30 TAC § 116.111(a)(2)(I)

The project results in a significant net increase in emissions of CO; therefore, PSD review is required for these pollutants. This application includes the required BACT analysis. Any required air quality analysis will be submitted in a separate report. The project does not result in a significant net increase in emissions of any other pollutant for which the PSD rules apply other than GHGs, which are not regulated by TCEQ rules. A separate PSD permit application for the GHG emissions is being submitted to EPA Region 6.

Air Dispersion Modeling – 30 TAC § 116.111(a)(2)(J)

The facility will provide an air dispersion modeling analysis to satisfy PSD requirements and state impacts requirements upon request of the TCEQ.

HAP – 30 TAC § 116.111(a)(2)(K)

The changes included in this application do not constitute construction or reconstruction under this rule.

Mass Cap and Trade Allowances – 30 TAC § 116.111(a)(2)(L)

The Mont Belvieu Complex is subject to the Mass Emissions Cap and Trade (MECT) Allowances provisions, and Enterprise holds sufficient NO_x allowances for this project.

US EPA ARCHIVE DOCUMENT

Appendix A

Material Balance

US EPA ARCHIVE DOCUMENT

TABLE 2
MATERIAL BALANCE

This material balance table is used to quantify possible emissions of air contaminants and special emphasis should be placed on potential air contaminants, for example: If feed contains sulfur, show distribution to all products. Please relate each material (or group of materials) listed to its respective location in the process flow diagram by assigning point numbers (taken from the flow diagram) to each material.

LIST EVERY MATERIAL INVOLVED IN EACH OF THE FOLLOWING GROUPS	Point No. from Flow Diagram	Process Rate (lbs/hr or SCFM) standard conditions: 70°F 14.7 PSIA. Check appropriate column at right for each process.	Measurement	Estimation	Calculation
1. Raw Materials - Input					
Y-Grade Feed	**A**	**110,000 bbl/day**		**X**	
2. Fuels Input					
Natural Gas	**B**	**Normal 3045 SCFM**		**X**	
3. Products & By-Products - Output					
Ethane Product	**C**	**182100 lbs/hr**		**X**	
Commercial Propane	**D**	**152500 lbs/hr**		**X**	
Commercial Butane	**E**	**113600 lbs/hr**		**X**	
Gasoline and Heavier Condensate	**F**	**98810 lbs/hr**		**X**	
4. Solid Wastes - Output					
Filter Press sludge	**G**	**5,925 (lb dry solids (d.s.)/d) (at 4% solids)**		**X**	
5. Liquid Wastes - Output					
Process Waste Water	**H**	**190 lbs/hr (ave. over 36 hr cycle)**		**X**	
WSAC Blow Down	**I**	**30050 lbs/hr**		**X**	
6. Airborne Waste (Solid) - Output					
$PM/PM_{10}/PM2_{2.5}$		**See Table 1(a)**			**X**
7. Airborne Wastes (Gaseous) - Output					
NO_x, CO, VOC, SO_2		**See Table 1(a)**			**X**

NOTE:
Above material balance is representative of expected operations, but is not intended to represent specific operating limitations or constraints. Rates shown are for each of two fractionation units.

US EPA ARCHIVE DOCUMENT

US EPA ARCHIVE DOCUMENT

Appendix B

Emissions Calculations

Enterprise Products Operating LLC
Mont Belvieu Complex - Eagleford Frac
APPENDIX B.1 - Summary of Emissions

Max Hourly Emission Rate (lb/hr)

Frac A

Pollutant	Hot Oil Heater	Regenerant Heater	Flare	Flare MSS	Fugitives	Refrigerant Condenser	Reflux Cooler	Lean Amine Tank	Amine Tank	Wastewater Tank	**Total**
NO_x	4.00	1.00	3.09	15.74							**23.82**
CO	6.25	2.54	9.56	31.42							**49.77**
VOC	0.28	0.06	0.45	19.11	0.46			2.08E-05	2.08E-05	0.36	**20.72**
PM	0.56	0.14				0.33	0.08				**1.11**
PM_{10}	0.56	0.14				0.22	0.05				**0.98**
$PM_{2.5}$	0.56	0.14				0.09	0.02				**0.81**
SO_2	0.35	0.07	2.09								**2.51**
H_2S			0.02								**0.02**
Formaldehyde	0.010	0.002									**0.01**

Frac B

Pollutant	Hot Oil Heater	Regenerant Heater	Flare	Flare MSS	Fugitives	Refrigerant Condenser	Reflux Cooler	Lean Amine Tank	Amine Tank	Wastewater Tank	**Total**
NO_x	4.00	1.00	Included with Frac A								**5.00**
CO	6.25	2.54									**8.79**
VOC	0.28	0.06			0.46			2.08E-05	2.08E-05	0.36	**1.16**
PM	0.56	0.14				0.33	0.08				**1.11**
PM_{10}	0.56	0.14				0.22	0.05				**0.98**
$PM_{2.5}$	0.56	0.14				0.09	0.02				**0.81**
SO_2	0.35	0.07									**0.42**
H_2S											**0.00**
Formaldehyde	0.01	0.002									**0.01**

DIB

Pollutant	Flare	Flare MSS	Fugitives	**Total**
NO_x	0.08			**0.08**
CO	0.25			**0.25**
VOC	0.25		0.37	**0.62**
SO_2	0.00			**0.00**

Maximum Annual Emission Rate (tpy)

Frac A

Pollutant	Hot Oil Heater	Regenerant Heater	Flare	Flare MSS	Fugitives	Refrigerant Condenser	Reflux Cooler	Lean Amine Tank	Amine Tank	Wastewater Tank	**Total**
NO_x	15.33	3.12	13.53	1.10							**33.08**
CO	27.36	5.57	41.88	2.20							**77.00**
VOC	1.23	0.25	1.98	1.33	2.00			2.49E-07	2.49E-07	3.20E-02	**6.81**
PM	2.45	0.62				1.44	0.34				**4.86**
PM_{10}	2.45	0.62				0.99	0.23				**4.30**
$PM_{2.5}$	2.45	0.62				0.38	0.09				**3.55**
SO_2	1.52	0.31	9.18								**11.00**
H_2S			0.10								**0.10**
Formaldehyde	0.05	0.01									**0.05**

Frac B

Pollutant	Hot Oil Heater	Regenerant Heater	Flare	Flare MSS	Fugitives	Refrigerant Condenser	Reflux Cooler	Lean Amine Tank	Amine Tank	Wastewater Tank	**Total**
NO_x	15.33	3.12	Included with Frac A								**18.45**
CO	27.36	5.57									**32.93**
VOC	1.23	0.25			2.00			2.49E-07	2.49E-07	3.20E-02	**3.51**
PM	2.45	0.62				1.44	0.34				**4.86**
PM_{10}	2.45	0.62				0.99	0.23				**4.30**
$PM_{2.5}$	2.45	0.62				0.38	0.09				**3.55**
SO_2	1.52	0.31									**1.83**
H_2S											**0.00**
Formaldehyde	0.05	0.01									**0.05**

DIB

Pollutant	Flare	Flare MSS	Fugitives	**Total**
NO_x	0.36			**0.36**
CO	1.12			**1.12**
VOC	1.10		1.61	**2.70**
SO_2	0.00			**0.00**

US EPA ARCHIVE DOCUMENT

US EPA ARCHIVE DOCUMENT

Enterprise Products Operating LLC
Mont Belvieu Complex - Eagleford Frac
APPENDIX B.2 - Flare Emission Calculations (SK25.001)

Flaring Parameters

	Maximum Flow		Heat Content	VOC Content	Stream MW	Heat Input to Flare
	(scf/yr)	(scf/hr)	(Btu/scf)	(Weight %)	(lb/lbmole)	(MMBtu/hr)
Process Gas	697,646,400	79,640	55	0.45	28.9	4.356
Natural Gas	278,031,548	31,739	1021	4.29	17.6	32.416

Process & MSS Gas Emission Factors

Pollutant	Factor	Units	Source
NO_x	0.084	lb/MMBtu	TCEQ Flare Guidance (2000) Table 5
CO	0.260	lb/MMBtu	TCEQ Flare Guidance (2000) Table 5
VOC	0.0017	lb/Mscf	Material balance & 99.5% DRE[1], per TCEQ Guidance, 2000
SO_2	0.025	lb/Mscf	Material balance w/inlet H_2S[2], per TCEQ guidance, 2000
H_2S	0.00027	lb/Mscf	Material balance w/inlet H_2S[2], per TCEQ guidance, 2000

[1] $EF_{VOC} = W_{VOC}$ in gas (%)/100, lb VOC/lb gas * MW_{gas}, lb/lbmole * 1 lbmole gas/379.5 scf gas * 1000 scf/Mscf * (1-99.5/100)

[2] $EF_{SO2} = Y_{H2S}$ in gas (%)/100, lbmol H_2S/lbmole gas * 1 lbmol gas/379.5 scf gas * 1 lbmol SO_2/1 lbmol H_2S * 64 lb SO_2/lbmol SO_2 * 1000 scf/Mscf

Natural Gas Emission Factors

Pollutant	Factor	Units	Source
NO_x	0.084	lb/MMBtu	TCEQ Flare Guidance (2000) Table 5
CO	0.260	lb/MMBtu	TCEQ Flare Guidance (2000) Table 5
VOC	0.0099	lb/Mscf	Material balance & 99.5%DRE[1], per TCEQ Guidance, 2000
SO_2	0.0025	lb/Mscf	Gas specification
H_2S	2.69E-05	lb/Mscf	Gas specification

[1] $EF_{VOC} = W_{VOC}$ in gas (%)/100, lb VOC/lb gas * MW_{gas}, lb/lbmole * 1 lbmole gas/379.5 scf gas * 1000 scf/Mscf * (1-99.5/100)

[2] $EF_{SO2} = Y_{H2S}$ in gas (%)/100, lbmol H_2S/lbmole gas * 1 lbmol gas/379.5 scf gas * 1 lbmol SO_2/1 lbmol H_2S * 64 lb SO_2/lbmol SO_2 * 1000 scf/Mscf

Emission Calculations

	Maximum Emission Rates							
	NO_x		CO		VOC		SO_2	
	lb/hr	ton/yr	lb/hr	ton/yr	lb/hr	ton/yr	lb/hr	ton/yr
Process Gas	0.37	1.60	1.13	4.96	0.14	0.60	2.01	8.82
Natural Gas	2.72	11.93	8.43	36.92	0.32	1.38	0.08	0.35
TOTAL	3.09	13.53	9.56	41.88	0.45	1.98	2.09	9.18

US EPA ARCHIVE DOCUMENT

ENTERPRISE PRODUCTS OPERATING LLC
MONT BELVIEU EAGLEFORD FRAC UNIT
MSS Emissions to Flare

Data	Density lb/gal	Btu/lb	
Ethane	2.63	22181	
Propane	4.12	21489	
Butanes	4.78	21136	
Natural Gasoline	4.00	20293	(as pentane)
Y-Grade	5.84	20293	(as pentane)

Description	Material	MSS Frequency - (H/D/W/M/Q/S/A)	Frequency Counter	Vent or Flare	Amount Released per Event	Units (lb/bbl/gal)	lb/event	MMBtu/event	lb/yr	MMBtu/yr
Butane Prover	Butane	M	24	Flare	10.0	gal	47.80	1.01	1,147.20	24.25
Ethane Product Strainer	Ethane	M	24	Flare	2.0	bbl	220.92	4.90	5,302.08	117.61
DeEthanizer Reflux Pump	Ethane	Q	8	Flare	1.0	bbl	110.46	2.45	883.68	19.60
DeEthanizer Reflux Pump	Ethane	Q	8	Flare	1.0	bbl	110.46	2.45	883.68	19.60
Ethane Booster Pump	Ethane	Q	8	Flare	1.0	bbl	110.46	2.45	883.68	19.60
Ethane Booster Pump	Ethane	Q	8	Flare	1.0	bbl	110.46	2.45	883.68	19.60
Ethane Injection Pump	Ethane	W	104	Flare	1.0	bbl	110.46	2.45	11,487.84	254.81
Ethane Injection Pump	Ethane	W	104	Flare	1.0	bbl	110.46	2.45	11,487.84	254.81
Ethane Prover	Ethane	M	24	Flare	2.0	bbl	220.92	4.90	5,302.08	117.61
Mixed Butane Product Strainer	Mixed Butanes	M	24	Flare	2	bbl	401.52	8.49	9,636.48	203.68
DeButanizer Reflux Pump	Mixed Butanes	Q	8	Flare	1.0	bbl	200.76	4.24	1,606.08	33.95
DeButanizer Reflux Pump	Mixed Butanes	Q	8	Flare	1.0	bbl	200.76	4.24	1,606.08	33.95
Butane Product Pumps	Mixed Butanes	Q	8	Flare	1.0	bbl	200.76	4.24	1,606.08	33.95
Butane Product Pumps	Mixed Butanes	Q	8	Flare	1.0	bbl	200.76	4.24	1,606.08	33.95
Gasoline Product Strainer	Natural Gasoline	M	24	Flare	2	bbl	336.27	6.82	8,070.45	163.77
DeButanizer Bottoms Pump	Natural Gasoline	Q	8	Flare	1.0	bbl	168.13	3.41	1,345.08	27.30
DeButanizer Bottoms Pump	Natural Gasoline	Q	8	Flare	1.0	bbl	168.13	3.41	1,345.08	27.30
Pentane Prover	Pentane	M	24	Flare	10.0	gal	1,681.34	34.12	40,352.26	818.87
DePropanizer Heat Pump Compres	Propane	M	24	Flare	2	bbl	346.08	7.44	8,305.92	178.49
Propane Product Strainer	Propane	M	24	Flare	2	bbl	346.08	7.44	8,305.92	178.49
Propane Injection Pump	Propane	Q	8	Flare	1.0	bbl	173.04	3.72	1,384.32	29.75
Propane Injection Pump	Propane	Q	8	Flare	1.0	bbl	173.04	3.72	1,384.32	29.75
Flare KO Drum Pump	Propane	Q	8	Flare	1.0	bbl	173.04	3.72	1,384.32	29.75
Propane Prover	Propane	M	24	Flare	5.0	bbl	865.20	18.59	20,764.80	446.21
Regenerant Pump	Y-Grade	Q	8	Flare	1.0	bbl	168.13	3.41	1,345.08	27.30
Regenerant Pump	Y-Grade	Q	8	Flare	1.0	bbl	168.13	3.41	1,345.08	27.30
Y-Grade Feed Prefilter	Y-Grade	S	8	Flare	28.0	bbl	4,703.58	95.45	37,628.66	763.60
Y-Grade Feed Prefilter	Y-Grade	S	8	Flare	28.0	bbl	4,703.58	95.45	37,628.66	763.60
Feed Coalescer	Y-Grade	S	4	Flare	102.3	bbl	17,197.47	348.99	68,789.89	1,395.95
Stage 1 Amine Coalescer	Y-Grade	S	4	Flare	160.5	bbl	26,986.80	547.64	107,947.22	2,190.57
Stage 2 Amine Coalescer	Y-Grade	S	4	Flare	160.5	bbl	26,986.80	547.64	107,947.22	2,190.57
Feed Dehydrator	Y-Grade	S	4	Flare	167.1	bbl	28,098.03	570.19	112,392.10	2,280.77
Feed Dehydrator	Y-Grade	S	4	Flare	167.1	bbl	28,098.03	570.19	112,392.10	2,280.77
Dehydrator After Filter	Y-Grade	S	4	Flare	5.0	bbl	834.89	16.94	3,339.54	67.77
Dehydrator After Filter	Y-Grade	S	4	Flare	5.0	bbl	834.89	16.94	3,339.54	67.77
Regenerant Filter	Y-Grade	S	4	Flare	4.8	bbl	802.98	16.29	3,211.94	65.18
Regenerant Coalescer	Y-Grade	S	4	Flare	22.4	bbl	3,762.87	76.36	15,051.46	305.44
Y-Grade Prover	Y-Grade	M	24	Flare	5.0	bbl	840.67	17.06	20,176.13	409.43

	lb/event	MMBtu/event
Max Event	28,098.03	570.19
Max Event duration, hr	5	

MSS EMISSIONS

Pollutant	lb/MMBtu	lb/hr	tpy
NOX	0.138	15.74	1.10
CO	0.2755	31.42	2.20
VOC	99.66%	19.11	1.33

Enterprise Products Operating LLC
Mont Belvieu Complex - Eagleford Frac
APPENDIX B.3 - Fuel Combustion Emission Calculations
Hot Oil Heaters (EPN HR15.001A, B) and Regenerant Gas Heaters (EPN HR15.002A, B)

Reference: Compilation of Air Pollutant Emission Factors (AP-42)
5th Edition, July 1998, Table 1.4-1 and 1.4-2 for Natural Gas Combustion
Volume 1: External Combustion Sources
U.S. Environmental Protection Agency
Office of Air and Radiation, Office of Air Quality Planning and Standards

Equipment Specifications:

Equipment:	**EPN: HR15.001A**	**Hot Oil Heater**
Heat Rating	140.0	MMBtu/hr
Fuel Usage:	1200.77	MMscf/yr
	137,075	scf/hr-max
Fuel Lower Heating Value:	1021	Btu/scf
Flue Gas flow:	1,692,877	scfh
Operating Hours:	8760	hr/yr

Equipment:	**EPN: HR15.001B**	**Hot Oil Heater**
Heat Rating	140.0	MMBtu/hr
Fuel Usage:	1200.77	MMscf/yr
	137,075	scf/hr-max
Fuel Lower Heating Value:	1021	Btu/scf
Flue Gas flow:	1,692,877	scfh
Operating Hours:	8760	hr/yr

Emission Factors:

Pollutant	Emission Factor	Unit	Source
NO_x (hourly)	4.00	lb/hr	Existing heater CEMS data
NO_x (annual)	0.025	lb/MMBTU	Manufacturer's Specification
CO (hourly)	50	ppmv	Manufacturer's Specification
CO (annual)	50	ppmv	Manufacturer's Specification
VOC	0.0020	lb/MMBTU	Data from similar heaters
PM	0.0040	lb/MMBTU	Data from similar heaters
SO_2	2.53	lb/MMscf	Gas specification
Formaldehyde	7.4E-05	lb/MMBTU	AP-42 Table 1.4-3

AP-42 factor in lb/NMMscf divided by 1020 Btu/scf to obtain lb/MMBtu

Pollutant	Emission Factor	Unit	Source
NO_x (hourly)	4.00	lb/hr	Existing heater CEMS data
NO_x (annual)	0.025	lb/MMBTU	Manufacturer's Specification
CO (hourly)	50	ppmv	Manufacturer's Specification
CO (annual)	50	ppmv	Manufacturer's Specification
VOC	0.0020	lb/MMBTU	Data from similar heaters
PM	0.0040	lb/MMBTU	Data from similar heaters
SO_2	2.53	lb/MMscf	Gas specification
Formaldehyde	7.4E-05	lb/MMBTU	AP-42 Table 1.4-3

Calculation of Emissions:

EPN	Description	Pollutant	Max Hourly Emission Rate (lb/hr)	Annual Emission Rate (tpy)
EPN: HR15.001A	Hot Oil Heater	NO_x	4.00	15.33
		CO	6.25	27.36
		VOC	0.28	1.23
		PM	0.56	2.45
		SO_2	0.35	1.52
		Formaldehyde	0.0103	0.045

EPN	Description	Pollutant	Max Hourly Emission Rate (lb/hr)	Annual Emission Rate (tpy)
EPN: HR15.001B	Hot Oil Heater	NO_x	4.00	15.33
		CO	6.25	27.36
		VOC	0.28	1.23
		PM	0.56	2.45
		SO_2	0.35	1.52
		Formaldehyde	0.0103	0.045

Max Hourly Emission Rate (lb/hr) = (Emission Factor (lb/MMBtu) x Firing Rate (MMBtu/hr)
Annual Emission Rate (tons/yr) = lb/hr x Hours of Operation x 1 ton/2000 lb

Example VOC Calculation:

$$\frac{140\ \text{MMBtu}}{\text{hr}} \times \frac{0.0020\ \text{lb VOC}}{\text{MMBtu}} = \mathbf{0.28}\ \text{lb/hr VOC}$$

Example CO Calculation:

$$\frac{1{,}692{,}877\ \text{scf}}{\text{hr}} \times \frac{50.0\ \text{ppm}_v\ \text{CO}}{1.00\text{E+06}} \times \frac{1.0\ \text{mole}}{379.4\ \text{scf}} \times \frac{28\ \text{lb CO}}{\text{mole}} = \mathbf{6.25}\ \text{lb/hr CO}$$

US EPA ARCHIVE DOCUMENT

Enterprise Products Operating LLC
Mont Belvieu Complex - Eagleford Frac
APPENDIX B.3 - Fuel Combustion Emission Calculations
Hot Oil Heaters (EPN HR15.001A, B) and Regenerant Gas Heaters (EPN HR15.002A, B)

Reference: Compilation of Air Pollutant Emission Factors (AP-42)
5th Edition, July 1998, Table 1.4-1 and 1.4-2 for Natural Gas Combustion
Volume 1: External Combustion Sources
U.S. Environmental Protection Agency
Office of Air and Radiation, Office of Air Quality Planning and Standards

Equipment Specifications:

Equipment:	**EPN: HR15.002A**	**Regenerant Heater**
Heat Rating	28.5	MMBtu/hr
Fuel Usage:	244.44	MMscf/yr
	27,905	scf/hr-max
Fuel Lower Heating Value:	1021	Btu/scf
Flue Gas flow:	344,621	scfh
Operating Hours:	8760	hr/yr

Equipment:	**EPN: HR15.002B**	**Regenerant Heater**
Heat Rating	28.5	MMBtu/hr
Fuel Usage:	244.44	MMscf/yr
	27,905	scf/hr-max
Fuel Lower Heating Value:	1021	Btu/scf
Flue Gas flow:	344,621	scfh
Operating Hours:	8760	hr/yr

Emission Factors:

Pollutant	Emission Factor	Unit	Source
NO_x (hourly)	0.035	lb/MMBTU	1.4 times annual
NO_x (annual)	0.025	lb/MMBTU	Manufacturer's Specification
CO (hourly)	100	ppmv	2 times annual average
CO (annual)	50	ppmv	Manufacturer's Specification
VOC	0.0020	lb/MMBTU	Data from similar heaters
PM	0.0050	lb/MMBTU	Data from similar heaters
SO_2	2.53	lb/MMscf	Gas specification
Formaldehyde	7.4E-05	lb/MMBTU	AP-42 Table 1.4-3

AP-42 factors in lb/NMMscf divided by 1020 Btu/scf to obtain lb/MMBtu

Pollutant	Emission Factor	Unit	Source
NO_x (hourly)	0.035	lb/MMBTU	1.4 times annual
NO_x (annual)	0.025	lb/MMBTU	Manufacturer's Specification
CO (hourly)	100	ppmv	2 times annual average
CO (annual)	50	ppmv	Manufacturer's Specification
VOC	0.0020	lb/MMBTU	Data from similar heaters
PM	0.0050	lb/MMBTU	Data from similar heaters
SO_2	2.53	lb/MMscf	Gas specification
Formaldehyde	7.4E-05	lb/MMBTU	AP-42 Table 1.4-3

Calculation of Emissions:

EPN	Description	Pollutant	Max Hourly Emission Rate (lb/hr)	Annual Emission Rate (tpy)
EPN: HR15.002A	Regenerant Heater	NO_x	1.00	3.12
		CO	2.54	5.57
		VOC	0.06	0.25
		PM	0.14	0.62
		SO_2	0.07	0.31
		Formaldehyde	2.10E-03	9.18E-03

EPN	Description	Pollutant	Max Hourly Emission Rate (lb/hr)	Annual Emission Rate (tpy)
EPN: HR15.002B	Regenerant Heater	NO_x	1.00	3.12
		CO	2.54	5.57
		VOC	0.06	0.25
		PM	0.14	0.62
		SO_2	0.07	0.31
		Formaldehyde	2.10E-03	9.18E-03

Max Hourly Emission Rate (lb/hr) = (Emission Factor (lb/MMBtu) x Firing Rate (MMBtu/hr)
Annual Emission Rate (tons/yr) = lb/hr x Hours of Operation x 1 ton/2000 lb

Example VOC Calculation:

$$\frac{28.5 \text{ MMBtu}}{\text{hr}} \times \frac{0.0020 \text{ lb VOC}}{\text{MMBtu}} = \mathbf{0.06} \text{ lb/hr VOC}$$

Example CO Calculation:

$$\frac{344{,}621 \text{ scf}}{\text{hr}} \times \frac{100.0 \text{ ppm}_v \text{ CO}}{1.00\text{E+06}} \times \frac{1.0 \text{ mole}}{379.4 \text{ scf}} \times \frac{28 \text{ lb CO}}{\text{mole}} = \mathbf{2.54} \text{ lb/hr CO}$$

US EPA ARCHIVE DOCUMENT

TABLE 6
BOILERS AND HEATERS

Type of Device:	Hot Oil Heater	Manufacturer:	TBD
Number from flow diagram:	HR15.001A, HR15.001B	Model Number:	TBD

CHARACTERISTICS OF INPUT

Type Fuel	Chemical composition (% by weight)		Inlet Air Temp (^oF) (after preheat)	Fuel Flow Rate (scfm* or lb/hr) Average		Design Maximum
Natural Gas	**Natural Gas**		Ambient 10-100 ^oF	---	---	~ 7,004 lb/hr
	1.36% N2	0.69% Propane	Gross Heating Value of Fuel (Specify Units)	Total Air Supplied and Excess Air		
	0.23% O2	0.19% i-Butane				
	0.01% CO	0.18% n-Butane				
	1.47% CO2	0.07% i-Pentane		Average		Design Maximum
	92.96% Methane	0.04% n-Pentane	LHV: 929 BTU/scf	---	scfm*	28,260 scfm*
	2.61% Ethane	0.18% Hexane+		---	excess	15% excess
				---	(vol.)	--- (vol.)

HEAT TRANSFER MEDIUM

Type Transfer Medium (Water, oil, etc.)	Temperature ^oF Input	Output	Pressure (psia) Input	Output	Flow Rate (specify units) Average	Design Maximum
Oil	282	400	104.7 approx	69.7	----	1,767,836 lb/hr

OPERATING CHARACTERISTICS

Ave. Fire Box Temp. at max. firing rate	Fire Box Volume (ft.3), (from drawing)	Gas Velocity in Fire Box (ft/sec) at max. firing rate	Residence Time in Fire Box at max. firing rate (sec)
~ 1540 ^oF	~ 22,000 ft^3	~ 5 ft/sec	~ 11.0 sec

STACK PARAMETERS				Flow Rate (specify units)	
Stack Diameter (Specify Units)	Stack Height (Specify Units)	Stack Gas Velocity (ft/sec) (@Ave. Fuel Flow Rate)	(@ Max. Fuel Flow Rate)	Stack Gas Temp ^oF	Exhaust scfm
~86 inches	110 ft	----	18.76	393 ^oF	28,215

CHARACTERISTICS OF OUTPUT

Material		Chemical Composition of Exit Gas Released (% by Volume)
N_2	CO	
O_2	NO_x	Flue Gas Stream (Wet Compostiion) (Mol%)
CO_2	SO_2	CO_2 = 8.63%
	H_2O	H_2O = 16.27%
		N_2 = 72.58%
		O_2 = 2.51%

Attach an explanation on how temperature, air flow rate, excess air or other operating variables are controlled.

Also supply an assembly drawing, dimensioned and to scale, in plan, elevation and as many sections as are needed to show clearly the operation of the combustion unit. Show interior dimensions and features of the equipment necessary to calculate in performance

* Standard Conditions: 70°F, 14.7 psia

TABLE 6
BOILERS AND HEATERS

Type of Device:	Regenerant Heater	Manufacturer:	TBD
Number from flow diagram:	HR15.002A, HR15.002B	Model Number:	TBD

CHARACTERISTICS OF INPUT

Type Fuel	Chemical composition (% by weight)	Inlet Air Temp (^oF) (after preheat)	Fuel Flow Rate (scfm* or lb/hr) Average	Fuel Flow Rate (scfm* or lb/hr) Design Maximum
Natural Gas	**Natural Gas**	Ambient 10-100 ^oF	--- ---	~1,243 lb/hr
	1.36% N2 0.69% Propane 0.23% O2 0.19% i-Butane 0.01% CO 0.18% n-Butane 1.47% CO2 0.07% i-Pentane 92.96% Methane 0.04% n-Pentane 2.61% Ethane 0.18% Hexane+	Gross Heating Value of Fuel (Specify Units) LHV: 929 BTU/scf	Total Air Supplied and Excess Air Average --- scfm* --- excess --- (vol.)	Design Maximum 5,151 scfm* 15% excess --- (vol.)

HEAT TRANSFER MEDIUM

Type Transfer Medium (Water, oil, etc.)	Temperature ^oF Input	Temperature ^oF Output	Pressure (psia) Input	Pressure (psia) Output	Flow Rate (specify units) Average	Flow Rate (specify units) Design Maximum
Dehydrator Regenerant	87-420	540	594.7 approx	579.7	---	~ 54,500 lb/hr

OPERATING CHARACTERISTICS

Ave. Fire Box Temp. at max. firing rate	Fire Box Volume (ft.3), (from drawing)	Gas Velocity in Fire Box (ft/sec) at max. firing rate	Residence Time in Fire Box at max. firing rate (sec)
~1,525 ºF	~2,700 ft^3	~3.80 ft/sec	~7 sec

STACK PARAMETERS

Stack Diameter (Specify Units)	Stack Height (Specify Units)	Stack Gas Velocity (ft/sec) (@Ave. Fuel Flow Rate)	Stack Gas Velocity (ft/sec) (@ Max. Fuel Flow Rate)	Flow Rate (specify units) Stack Gas Temp ^oF	Flow Rate (specify units) Exhaust scfm
~37 in	~71 ft	---	23.71	520	5,744

CHARACTERISTICS OF OUTPUT

Material		Chemical Composition of Exit Gas Released (% by Volume)
N_2	CO	Flue Gas Stream (Wet Compostiion) (Mol%)
O_2	NO_x	CO_2 = 8.63%
CO_2	SO_2	H_2O = 16.27%
	H_2O	N_2 = 72.58%
		O_2 = 2.51%

Attach an explanation on how temperature, air flow rate, excess air or other operating variables are controlled.

Also supply an assembly drawing, dimensioned and to scale, in plan, elevation and as many sections as are needed to show clearly the operation of the combustion unit. Show interior dimensions and features of the equipment necessary to calculate in performance

* Standard Conditions: 70°F, 14.7 psia

US EPA ARCHIVE DOCUMENT

Enterprise Products Operating LLC
Mont Belvieu Complex - Eagleford Frac
APPENDIX B.4 - Fugitive Emissions Calculations (EPN FRAC F EFa,b)

FACILITY NAME: Enterprise Products, Eagleford Frac Project, Mont Belvieu, Texas
AREA: Area 02126 - ISBL
COMPOSITION: Total VOC: Less Methane, Ethane & Inerts

FIN: **FRAC F EFa**
EPN: **FRAC F EFa**

METHODOLOGY USED: SOCMI w/o Ethylene
CONTROL EFFICIENCY: 28LAER w/ flanges monitored as valves

COMPONENT	As-Built COMP. COUNT	HOURS SERVICE (hrs)	VOC PERCENT (%)	EMISSION FACTOR (lb/hr-comp.)	PERCENT REDUCTION (%)	EMISSIONS (lb/hr)	EMISSIONS (ton/yr)
VALVES							
GAS/VAPOR	636	8760	100	0.0089	97	0.17	0.74
GAS/VAPOR (Fuel Gas)	268	8760	2	0.0089	97	0.00	0.01
LIGHT LIQUID	1286	8760	100	0.0035	97	0.14	0.59
LIGHT LIQUID	539	8760	75	0.0035	97	0.04	0.19
HEAVY LIQUID	0	8760	100	0.0070	30	0.00	0.00
PUMPS							
DOUBLE MECH. SEAL	9	8760	100	0.0386	100	0.00	0.00
LIGHT LIQUID	0	8760	100	0.0386	93	0.00	0.00
HEAVY LIQUID	0	8760	100	0.0161	0	0.00	0.00
FLANGES							
GAS/VAPOR	460	8760	100	0.0029	97	0.04	0.18
GAS/VAPOR (Fuel Gas)	349	8760	2	0.0029	97	0.00	0.00
LIGHT LIQUID	3130	8760	100	0.0005	97	0.05	0.21
LIGHT LIQUID (Y-Grade)	1600	8760	75	0.0005	97	0.02	0.08
HEAVY LIQUID	0	8760	100	0.00007	0	0.00	0.00
OPEN-ENDED LINES	1444	8760	100	0.004	100	0.00	0.00
RELIEF VALVES w/RD	39	8760	100	0.2293	100	0.00	0.00
COMPRESSORS	2	8760	100	0.5027	100	0.00	0.00
SAMPLE CONNECTIONS	0	8760	100	0.033	97	0.00	0.00
OTHER	300	8760	100	0.000265	97	0	0.01
					TOTAL	**0.46**	**2.00**

FIN: **FRAC F EFb**
EPN: **FRAC F EFb**

METHODOLOGY USED: SOCMI w/o Ethylene
CONTROL EFFICIENCY: 28MID w/ flanges monitored as valves

COMPONENT	As-Built COMP. COUNT	HOURS SERVICE (hrs)	VOC PERCENT (%)	EMISSION FACTOR (lb/hr-comp.)	PERCENT REDUCTION (%)	EMISSIONS (lb/hr)	EMISSIONS (ton/yr)
VALVES							
GAS/VAPOR	636	8760	100	0.0089	97	0.17	0.74
GAS/VAPOR (Fuel Gas)	268	8760	2	0.0089	97	0.00	0.01
LIGHT LIQUID	1286	8760	100	0.0035	97	0.14	0.59
LIGHT LIQUID	539	8760	75	0.0035	97	0.04	0.19
HEAVY LIQUID	0	8760	100	0.0070	30	0.00	0.00
PUMPS							
DOUBLE MECH. SEAL	9	8760	100	0.0386	100	0.00	0.00
LIGHT LIQUID	0	8760	100	0.0386	93	0.00	0.00
HEAVY LIQUID	0	8760	100	0.0161	0	0.00	0.00
FLANGES							
GAS/VAPOR	460	8760	100	0.0029	97	0.04	0.18
GAS/VAPOR (Fuel Gas)	349	8760	2	0.0029	97	0.00	0.00
LIGHT LIQUID	3130	8760	100	0.0005	97	0.05	0.21
LIGHT LIQUID (Y-Grade)	1600	8760	75	0.0005	97	0.02	0.08
HEAVY LIQUID	0	8760	100	0.00007	0	0.00	0.00
OPEN-ENDED LINES	1444	8760	100	0.004	100	0.00	0.00
RELIEF VALVES w/RD	39	8760	100	0.2293	100	0.00	0.00
COMPRESSORS	2	8760	100	0.5027	100	0.00	0.00
SAMPLE CONNECTIONS	0	8760	100	0.033	97	0.00	0.00
OTHER	300	8760	100	0.000265	97	0	0.01
					TOTAL	**0.46**	**2.00**

Note: Flanges will be monitored at the same leak definition as valves, so the valve credit will be used for flanges.
(1) All pumps are Dual Mechanical Seal
(2) Flange category is comprised of flanges and screwed connectors.
(3) There are 10 Sample Stations w/ regulated product. All components are less than 1/2", containing 40 points apiece.

US EPA ARCHIVE DOCUMENT

Enterprise Products Operating LLC
Mont Belvieu Complex - Eagleford Frac
APPENDIX B.5 - Wet Surface Air Collers Emissions Calculations
Refrigerant Condensers (HT16.028A, B) and Reflux Coolers (HT16.029A, B)

Cooling Tower Data

Annual Operating Hours	8760	
Drift %	0.0010%	
TDS in Circulating Water (ppm)	3500	maximum
	3500	average
% Mass of drift with PM10	68%	Note: Interpolated (linear) from Table Below
% Mass of drift with PM2.5	26.42%	Note: Interpolated (linear) from Table Below

				PM		PM10		PM2.5	
EPN	FIN	Name	Cooling Water Rate (gpm)	Emission Rate lb/hr	Emission Rate ton/yr	Emission Rate lb/hr	Emission Rate ton/yr	Emission Rate lb/hr	Emission Rate ton/yr
HT16.028A	HT16.028A	Refrigerant Condenser	18,816	0.33	1.44	0.22	0.99	0.0871	0.381
HT16.028B	HT16.028B	Refrigerant Condenser	18816	0.33	1.44	0.22	0.99	0.0871	0.381

PM = Recirc. Rate,gpm * Drift% * 8.34 lb/gal * 60 min/hr * TDS ppm/1000000

Particle Size Calculation

	Typical Cooling Tower Droplet Size		Particle Size
	Mean (Dd, microns)	Distribution (% Mass Smaller Than)	(Dp, microns)
1	10	12.000	1.167
2	15	20.000	1.751
3	35	40.000	4.086
4	65	60.000	7.588
5	115	80.000	13.425
6	170	90.000	19.846
7	230	95.000	26.850
8	375	99.000	43.777
9	525	99.800	61.288
10	600	100.000	70.043

PM2.5 %Mass
26.4153 Linear Interpolation

PM 10 %Mass
68.26 Linear Interpolation

Dp = Dd * [(pd/pp) * (TDS) / 1,000,000)] ^ 1/3

where: Density of Water (pd)= 1
Denisty of TDS (pp) = 2.2

Cooling Tower Data

Annual Operating Hours	8760	
Drift %	0.0010%	
TDS in Circulating Water (ppm)	3500	maximum
	3500	average
% Mass of drift with PM10	68%	Note: Interpolated (linear) from Table Below
% Mass of drift with PM2.5	26.42%	Note: Interpolated (linear) from Table Below

				PM		PM10		PM2.5	
EPN	FIN	Name	Cooling Water Rate (gpm)	Emission Rate lb/hr	Emission Rate ton/yr	Emission Rate lb/hr	Emission Rate ton/yr	Emission Rate lb/hr	Emission Rate ton/yr
HT16.029A	HT16.029A	Reflux Cooler	4,480	0.08	0.34	0.05	0.23	0.0207	0.091
HT16.029B	HT16.029B	Reflux Cooler	4,480	0.08	0.34	0.05	0.23	0.0207	0.091

PM = Recirc. Rate,gpm * Drift% * 8.34 lb/gal * 60 min/hr * TDS ppm/1000000

Particle Size Calculation

	Typical Cooling Tower Droplet Size		Particle Size
	Mean (Dd, microns)	Distribution (% Mass Smaller Than)	(Dp, microns)
1	10	12.000	1.167
2	15	20.000	1.751
3	35	40.000	4.086
4	65	60.000	7.588
5	115	80.000	13.425
6	170	90.000	19.846
7	230	95.000	26.850
8	375	99.000	43.777
9	525	99.800	61.288
10	600	100.000	70.043

PM2.5 %Mass
26.4153 Linear Interpolation

PM 10 %Mass
68.26 Linear Interpolation

Dp = Dd * [(pd/pp) * (TDS) / 1,000,000)] ^ 1/3

where: Density of Water (pd)= 1
Denisty of TDS (pp) = 2.2

US EPA ARCHIVE DOCUMENT

Enterprise Products Operating LLC
Mont Belvieu Complex - Eagleford Frac
APPENDIX B.6 - Tank Emissions
Mont Belvieu Complex - Eagleford Frac
Lean Amine Tanks (SV19.003A, B), Amine Tanks (SV19.002A, B),
Wastewater Tanks (SV19.006A, B)

Reference: Compilation of Air Pollutant Emission Factors (AP-42), 5th Edition, January 1995
Volume I: Stationary Point and Area Sources
U.S. Environmental Protection Agency Office of Air and Radiation, Office of Air Quality Planning and Standards
TNRCC Technical Guidance Package - Storage Tanks - February 1995

Notes:
1 - Tank can be completely filled in one hour.
2 - The amine tanks can be filled at a rate of 1500 gal/hr.

Standing Losses from a Fixed Roof Tank (L_S):

$L_S = 365\ V_V\ W_V\ K_E\ K_S$ **(Equation 1-2)**

Where:

L_S = Storage Tank Standing Losses, lb/year
V_V = Vapor Space Volume, ft^3
W_V = Vapor Density, lb/ft^3
K_E = Vapor Space Expansion Factor
K_S = Vented Vapor Saturation Factor
365 = days/year

Equation 1-3

$V_V = (Pi/4) * D^2 * H_{VO}$

Where:

V_V = Vapor Space Volume, ft^3
D = Tank Diameter, ft
H_{VO} = Vapor Space Outage, ft (Assume as 50 percent height.)

Equation 1-9

$W_V = (M_V\ P_{VA}) / (R\ T_{LA})$

Where:

W_V = Vapor Density, lb/ft^3
M_V = Vapor Molecular Weight, lb/lbmole
R = Ideal Gas Constant, 10.731 (psia ft^3)/(lbmole ^oR)
P_{VA} = Vapor Pressure at Daily Average Liquid Surface Temp., psia
T_{LA} = Daily Average Liquid Surface Temperature, ^oR

where:

T_{LA} = $0.44*T_{AA}+0.56*T_B+(0.0079*alpha*I)$ **(Equation 1-13)**

and:

T_B = $T_{AA} + 6(alpha -1)$ **(Equation 1-15)**
T_{AA} = $(T_{AX}+T_{AN})/2$ **(Equation 1-14)**

where:

T_{AA} = Daily Average Ambient Temperature, ^oR
T_{AX} = Daily Maximum Ambient Temp., ^oR, from Table 7.1-7 (TANKS3)
T_{AN} = Daily Minimum Ambient Temp., ^oR, from Table 7.1-7 (TANKS3)
alpha = Tank Paint Solar Absorptance, dimensionless, from Table 7.1-6
I = Daily Total Solar Insulation Factor, Btu/ft^2, from Table 7.1.7 (TANKS3

NOTE:

T_{LX} = $T_{LA} + 0.25*dT_V$
T_{LN} = $T_{LA} - 0.25*dT_V$

where:

T_{LX} = Daily Maximum Liquid Surface Temperature, ^oR
T_{LN} = Daily Minimum Liquid Surface Temperature, ^oR

Equation 1-22

Where:

K_S = Vented Vapor Saturation Factor, dimensionless
P_{VA} = Vapor Pressure @ Daily Avg Liquid Surface Temp, psia
H_{VO} = Vapor Space Outage, ft (Assume as 50 percent height.)

Equation 1-16

$K_E = dT_V/T_{LA} + (dP_V - dP_B)/(P_A - P_{VA})$

Where:

dT_V = Daily Vapor Temperature Range, ^oR
dP_V = Daily Vapor Pressure Range, psi
dP_B = Breather Vent Pressure Setting Range, psi
P_A = Atmospheric Pressure, 14.7 psia
P_{VA} = Vapor Pressure @ Daily Avg. Liquid Surface Temp., psia
T_{LA} = Daily Average Liquid Surface Temp., ^oR

and:

dT_V = $0.72*dT_A +(0.028 *alpha *I)$ **(Equation 1-17)**

where:

dT_A = Daily Ambient Temperature Range, ^oR
dT_A = $T_{AX} - T_{AN}$ **(Equation 1-21)**

dP_V = $P_{VX} - P_{VN}$ **(Equation 1-18)**

and:

P_{VX} = Vapor Pressure @ Daily Max. Liquid Surface Temp. (T_{LX}), psia
P_{VN} = Vapor Pressure @ Daily Min. Liquid Surface Temp. (T_{LN}),psia

and:

d_{PB} = $P_{BP} - P_{BV}$ **(Equation 1-20)**

where:

P_{BP} = Breather Vent Pressure Setting, psig
P_{BV} = Breather Vent Vacuum Setting, psig

US EPA ARCHIVE DOCUMENT

Enterprise Products Operating LLC
Mont Belvieu Complex - Eagleford Frac
APPENDIX B.6 - Tank Emissions
Mont Belvieu Complex - Eagleford Frac
Lean Amine Tanks (SV19.003A, B), Amine Tanks (SV19.002A, B),
Wastewater Tanks (SV19.006A, B)

Reference: Compilation of Air Pollutant Emission Factors (AP-42), 5th Edition, January 1995
Volume I: Stationary Point and Area Sources
U.S. Environmental Protection Agency Office of Air and Radiation, Office of Air Quality Planning and Standards
TNRCC Technical Guidance Package - Storage Tanks - February 1995

Notes:
1 - Tank can be completely filled in one hour.
2 - The amine tanks can be filled at a rate of 1500 gal/hr.

Standing Losses from a Fixed Roof Tank (L_S):

Parameter Input:

Tank No.	Chemical Name	M_V (lb/lbmol)	P_A (psia)	P_{VA} (psia)	D (feet)	HVO (feet)	T_{AX} (^oR)	T_{AN} (^oR)	alpha (unitless)	I (Btu/ft^2)	P_{BP} (psig)	P_{BV} (psig)
Lean Amine Tank	DEA	62	14.7	4.93E-06	10.00	7.50	538.8	517.1	0.17	1351	0.03	-0.03
Lean Amine Tank	DEA	62	14.7	4.93E-06	10.00	7.50	538.8	517.1	0.17	1351	0.03	-0.03
Amine Tank	DEA	62	14.7	4.93E-06	10.00	7.50	538.8	517.1	0.17	1351	0.03	-0.03
Amine Tank	DEA	62	14.7	4.93E-06	10.00	7.50	538.8	517.1	0.17	1351	0.03	-0.03
Wastewater Tank	Wastewater	100	14.7	0.10	16.25	5.42	538.8	517.1	0.17	1351	0.03	-0.03
Wastewater Tank	Wastewater	100	14.7	0.10	16.25	5.42	538.8	517.1	0.17	1351	0.03	-0.03

Intermediate Calculations:

Tank No.	Chemical Name	T_{AA} (^oR)	T_B (^oR)	T_{LA} (^oR)	dT_A (^oR)	dP_B (psia)	dT_V (^oR)	T_{LX} (^oR)	T_{LN} (^oR)	P_{VX} (psia)	P_{VN} (psia)	dP_V (psia)
Lean Amine Tank	DEA	527.9	527.9	529.7	21.70	0.0600	22.05	535.3	524.2	0.0000	1.92E-06	0.0000
Lean Amine Tank	DEA	527.9	527.9	529.7	21.70	0.0600	22.05	535.3	524.2	0.0000	1.92E-06	0.0000
Amine Tank	DEA	527.9	527.9	529.7	21.70	0.0600	22.05	535.3	524.2	0.0000	1.92E-06	0.0000
Amine Tank	DEA	527.9	527.9	529.7	21.70	0.0600	22.05	535.3	524.2	0.0000	1.92E-06	0.0000
Wastewater Tank	Wastewater	527.9	527.9	529.7	21.70	0.0600	22.05	535.3	524.2	0.9253	4.93E-01	0.4326
Wastewater Tank	Wastewater	527.9	527.9	529.7	21.70	0.0600	22.05	535.3	524.2	0.9253	4.93E-01	0.4326

Annual Standing Losses (L_S):

Tank No.	Chemical Name	V_V (ft^3)	W_V (lb/ft^3)	K_E (unitless)	K_S (unitless)	L_S (lb/yr)	L_S (ton/yr)	L_S (lb/hr)
Lean Amine Tank	DEA	589	5.3842E-08	0.038	1.000	4.E-04	2.17E-07	4.96E-08
Lean Amine Tank	DEA	589	5.3842E-08	0.038	1.000	4.E-04	2.17E-07	4.96E-08
Amine Tank	DEA	589	5.3842E-08	0.038	1.000	4.E-04	2.17E-07	4.96E-08
Amine Tank	DEA	589	5.3842E-08	0.038	1.000	4.E-04	2.17E-07	4.96E-08
Wastewater Tank	Wastewater	1123	1.7628E-03	0.067	0.972	5.E+01	2.36E-02	5.38E-03
Wastewater Tank	Wastewater	1123	1.7628E-03	0.067	0.972	5.E+01	2.36E-02	5.38E-03

US EPA ARCHIVE DOCUMENT

Enterprise Products Operating LLC
Mont Belvieu Complex - Eagleford Frac
APPENDIX B.6 - Tank Emissions
Mont Belvieu Complex - Eagleford Frac
Lean Amine Tanks (SV19.003A, B), Amine Tanks (SV19.002A, B),
Wastewater Tanks (SV19.006A, B)

Reference: Compilation of Air Pollutant Emission Factors (AP-42), 5th Edition, January 1995
Volume I: Stationary Point and Area Sources
U.S. Environmental Protection Agency Office of Air and Radiation, Office of Air Quality Planning and Standards
TNRCC Technical Guidance Package - Storage Tanks - February 1995

Notes:
1 - Tank can be completely filled in one hour.
2 - The amine tanks can be filled at a rate of 1500 gal/hr.

Annual Working Losses from a Fixed Roof Tank

$$L_W = (0.001)(M_V)(P)(Q)(K_N)(K_P) \qquad \text{(Equation 1-23)}$$

Where:
L_W = Annual Working Losses, lb/year
L_{WMAX} = Projected Annual Working Losses assuming a maximum liquid surface temperature, lb/year
M_V = Molecular Weight of Vapor in Storage Tank, lb/lb-mole
P_{VA} = True Vapor Pressure at Daily Average Liquid Surface Temperature, psia
P_{VAM} = True Vapor Pressure at Daily Maximum Liquid Surface Temperature, psia (used for hourly calculations)
Q = Annual Net Throughput, barrels/yr
K_N = Turnover Factor from AP-42 Figure 12.3-6, dimensionless
K_P = Product Factor, dimensionless. Kc equals 1.0 for liquids except crude oil.

Tank No.	Chemical Name	M_V (lb/lb-mol)	P_{VA} (psia)	P_{VAM} (psia)	Q (barrels/yr)	K_N (unitless)	K_P (unitless)
Lean Amine Tank	DEA	62.08	4.93E-06	9.34E-06	208	1.0	1.0
Lean Amine Tank	DEA	62.08	4.93E-06	9.34E-06	208	1.0	1.0
Amine Tank	DEA	62.08	4.93E-06	9.34E-06	208	1.0	1.0
Amine Tank	DEA	62.08	4.93E-06	9.34E-06	208	1.0	1.0
Wastewater Tank	Wastewater	100.21	1.00E-01	1.00E-01	1674	1.0	1.0
Wastewater Tank	Wastewater	100.21	1.00E-01	1.00E-01	1674	1.0	1.0

Annual Working Losses (L_W and L_{WMAX}):

Tank No.	Chemical Name	L_W (lb/year)	L_W (ton/year)	L_{WMAX}* (lb/year)
Lean Amine Tank	DEA	6.36E-05	3.18E-08	1.20E-04
Lean Amine Tank	DEA	6.36E-05	3.18E-08	1.20E-04
Amine Tank	DEA	6.36E-05	3.18E-08	1.20E-04
Amine Tank	DEA	6.36E-05	3.18E-08	1.20E-04
Wastewater Tank	Wastewater	1.68E+01	8.39E-03	1.68E+01
Wastewater Tank	Wastewater	1.68E+01	8.39E-03	1.68E+01

*L_{WMAX} assumes a K_N value of 1, per TNRCC guidance document dated February 1995.

US EPA ARCHIVE DOCUMENT

Enterprise Products Operating LLC
Mont Belvieu Complex - Eagleford Frac
APPENDIX B.6 - Tank Emissions
Mont Belvieu Complex - Eagleford Frac
Lean Amine Tanks (SV19.003A, B), Amine Tanks (SV19.002A, B),
Wastewater Tanks (SV19.006A, B)

Reference: Compilation of Air Pollutant Emission Factors (AP-42), 5th Edition, January 1995
Volume I: Stationary Point and Area Sources
U.S. Environmental Protection Agency Office of Air and Radiation, Office of Air Quality Planning and Standards
TNRCC Technical Guidance Package - Storage Tanks - February 1995

Notes:
1 - Tank can be completely filled in one hour.
2 - The amine tanks can be filled at a rate of 1500 gal/hr.

Hourly Working Losses calculated according to the TNRCC Guidance Document dated February 1995:

$$L_{WMAXH} = ((L_{WMAX})(FR_m))/((TO)(TC_g))$$

Where:

L_{WMAXH} = Hourly Working Loss, lb/hr
L_{WMAX} = Projected Annual Working Losses assuming a maximum liquid surface temperature, lb/year
FR_m = Filling Rate, gallons/hour
TO = Turnovers per Year, dimensionless
TCg = Tank Working Capacity , gallons

Hourly Working Losses per tank calculated according to the TNRCC (L_{WMAXH}):

Tank No.	Chemical Name	L_{WMAX} (lb/year)	FR_m (gal/hr)	TO (unitless)	TC_g (gal)	L_{WMAXH} (lb/hr)
Lean Amine Tank	DEA	1.20E-04	1500	1	8820	2.07E-05
Lean Amine Tank	DEA	1.20E-04	1500	1	8820	2.07E-05
Amine Tank	DEA	1.20E-04	1500	1	8820	2.07E-05
Amine Tank	DEA	1.20E-04	1500	1	8820	2.07E-05
Wastewater Tank	Wastewater	1.68E+01	1500	4	16800	0.3579
Wastewater Tank	Wastewater	1.68E+01	1500	4	16800	0.3579

7.1.3.1 Total Losses From Fixed Roof Tanks:

$$L_T = L_S + L_W \quad \text{(Equation 1-1)}$$

Where:

L_T = Total losses, lb/yr
L_S = Standing Storage Losses, lb/yr
L_W = Working Losses, lb/yr

Tank No.	Chemical Name	Hourly Standing Loss (L_S) lb/hr	Annual Standing Loss (L_S) ton/yr	Hourly Working Loss (L_W) lb/hr	Annual Working Loss (L_W) tons/yr	Total Hourly Emissions (L_T) lb/hr	Total Annual Emissions (L_T) tons/yr
Lean Amine Tank	DEA	4.96E-08	2.17E-07	2.07E-05	3.18E-08	2.08E-05	2.49E-07
Lean Amine Tank	DEA	4.96E-08	2.17E-07	2.07E-05	3.18E-08	2.08E-05	2.49E-07
Amine Tank	DEA	4.96E-08	2.17E-07	2.07E-05	3.18E-08	2.08E-05	2.49E-07
Amine Tank	DEA	4.96E-08	2.17E-07	2.07E-05	3.18E-08	2.08E-05	2.49E-07
Wastewater Tank	Wastewater	0.0054	0.0236	0.3579	0.0084	0.36	0.032
Wastewater Tank	Wastewater	0.0054	0.0236	0.3579	0.0084	0.36	0.032

US EPA ARCHIVE DOCUMENT

US EPA ARCHIVE DOCUMENT

Enterprise Products Operating LLC
Mont Belvieu Complex - Eagleford DIB
APPENDIX B.7 - Flare Emission Calculations (EPN SK25.001)

Flaring Parameters

	Maximum Flow		Heat Content	VOC Content	Stream MW	Heat Input to Flare
	(scf/yr)	(scf/hr)	(Btu/scf)	(Weight %)	(lb/lbmole)	(MMBtu/hr)
Process Gas	2,863,907	327	2998	100.00	58.1	0.980
Natural Gas	0	0	1021	4.29	17.6	0.000

Process & MSS Gas Emission Factors

Pollutant	Factor	Units	Source
NO_x	0.084	lb/MMBtu	TCEQ Flare Guidance (2000) Table 5
CO	0.260	lb/MMBtu	TCEQ Flare Guidance (2000) Table 5
VOC	0.7650	lb/Mscf	Material balance & 99.5% DRE[1], per TCEQ Guidance, 2000
SO_2	0.000	lb/Mscf	Material balance w/inlet H_2S[2], per TCEQ guidance, 2000

[1] $EF_{VOC} = W_{VOC}$ in gas (%)/100, lb VOC/lb gas * MW_{gas}, lb/lbmole * 1 lbmole gas/379.5 scf gas * 1000 scf/Mscf * (1-99.5/100)

[2] $EF_{SO2} = Y_{H2S}$ in gas (%)/100, lbmol H_2S/lbmole gas * 1 lbmol gas/379.5 scf gas * 1 lbmol SO_2/1 lbmol H_2S * 64 lb SO_2/lbmol SO_2 * 1000 scf/Mscf

Natural Gas Emission Factors

Pollutant	Factor	Units	Source
NO_x	0.084	lb/MMBtu	TCEQ Flare Guidance (2000) Table 5
CO	0.260	lb/MMBtu	TCEQ Flare Guidance (2000) Table 5
VOC	0.0099	lb/Mscf	Material balance & 99.5%DRE[1], per TCEQ Guidance, 2000
SO_2	0.0025	lb/Mscf	Gas specification

[1] $EF_{VOC} = W_{VOC}$ in gas (%)/100, lb VOC/lb gas * MW_{gas}, lb/lbmole * 1 lbmole gas/379.5 scf gas * 1000 scf/Mscf * (1-99.5/100)

[2] $EF_{SO2} = Y_{H2S}$ in gas (%)/100, lbmol H_2S/lbmole gas * 1 lbmol gas/379.5 scf gas * 1 lbmol SO_2/1 lbmol H_2S * 64 lb SO_2/lbmol SO_2 * 1000 scf/Mscf

Emission Calculations

	Maximum Emission Rates							
	NO_x		CO		VOC		SO_2	
	lb/hr	ton/yr	lb/hr	ton/yr	lb/hr	ton/yr	lb/hr	ton/yr
Process Gas	0.08	0.36	0.25	1.12	0.25	1.10	0.00	0.00
Natural Gas	0.00	0.00	0.00	0.00	0.00	0.00	0.00	0.00
TOTAL	0.08	0.36	0.25	1.12	0.25	1.10	0.00	0.00

Enterprise Products Operating LLC
Mont Belvieu Complex - Eagleford DIB
APPENDIX B.8 - Fugitive Emissions Calculations (EPN EFDIB-FUG)

FACILITY NAME: Enterprise Products, Eagleford DIB Project, Mont Belvieu, Texas
AREA: Area 02126 - ISBL
COMPOSITION: Total VOC: Less Methane, Ethane & Inerts

FIN: **EFDIB-FUG**
EPN: **EFDIB-FUG**

METHODOLOGY USED: SOCMI w/o Ethylene
CONTROL EFFICIENCY: 28LAER w/ flanges monitored as valves

COMPONENT	COMP. COUNT	HOURS SERVICE (hrs)	VOC PERCENT (%)	EMISSION FACTOR (lb/hr-comp.)	PERCENT REDUCTION (%)	EMISSIONS (lb/hr)	EMISSIONS (ton/yr)
VALVES							
GAS/VAPOR	388	8760	100	0.0089	97	0.10	0.45
GAS/VAPOR (Fuel Gas)	0	8760	2	0.0089	97	0.00	0.00
LIGHT LIQUID	936	8760	100	0.0035	97	0.10	0.43
LIGHT LIQUID	0	8760	75	0.0035	97	0.00	0.00
HEAVY LIQUID	0	8760	100	0.0070	30	0.00	0.00
PUMPS							
DOUBLE MECH. SEAL	0	8760	100	0.0386	100	0.00	0.00
LIGHT LIQUID	7	8760	100	0.0386	93	0.02	0.08
HEAVY LIQUID	0	8760	100	0.0161	0	0.00	0.00
FLANGES							
GAS/VAPOR	355	8760	100	0.0029	97	0.03	0.14
GAS/VAPOR (Fuel Gas)	0	8760	2	0.0029	97	0.00	0.00
LIGHT LIQUID	1012	8760	100	0.0005	97	0.02	0.07
LIGHT LIQUID (Y-Grade)	0	8760	75	0.0005	97	0.00	0.00
HEAVY LIQUID	0	8760	100	0.00007	0	0.00	0.00
OPEN-ENDED LINES	0	8760	100	0.004	100	0.00	0.00
RELIEF VALVES	20	8760	100	0.2293	100	0.00	0.00
COMPRESSORS	4	8760	100	0.5027	95	0.10	0.44
SAMPLE CONNECTIONS	3675	8760	100	0.033	100	0.00	0.00
OTHER	0	8760	100	0.000265	97	0	0.00
					TOTAL	**0.37**	**1.61**

Note: Flanges will be monitored at the same leak definition as valves, so the valve credit will be used for flanges.
(1) All pumps are Dual Mechanical Seal
(2) Flange category is comprised of flanges and screwed connectors.
(3) Relief valves are routed to flare. 100% control.

US EPA ARCHIVE DOCUMENT

US EPA ARCHIVE DOCUMENT

Appendix C

RBLC Database Search Results

Table C-1 Results of RBLC Search for Heaters (CO) 12/15/2011

Facility Name	Company Name	State	Date	Process Name	Throughput		Control Method	Emission Limit	
STYRENE MONOMER PLANT	COS-MAR COMPANY	LA	02/11/2003	PROCESS SUPERHEATER HF-1201/1219	298.9	MMBTU/H	Good Combustion Practices	0.082 lb/MMBtu	24.6 LB/H
STYRENE MONOMER PLANT	COS-MAR COMPANY	LA	02/11/2003	BZ RECOVERY COLUMN HEATER HS-2103	182.1	MMBTU/H	Good Combustion Practices	0.082 lb/MMBtu	15 LB/H
STYRENE MONOMER PLANT	COS-MAR COMPANY	LA	02/11/2003	EB RECOVERY COLUMN HEATER HS-2104	269.3	MMBTU/H	Good Combustion Practices	0.082 lb/MMBtu	22.2 LB/H
STYRENE MONOMER PLANT	COS-MAR COMPANY	LA	02/11/2003	PEB RECOVERY COLUMN HEATER HS-2105	25.2	MMBTU/H	Good Combustion Practices	0.083 lb/MMBtu	2.1 LB/H
STYRENE MONOMER PLANT	COS-MAR COMPANY	LA	02/11/2003	PROCESS SUPERHEATER HS-8201/8219	280	MMBTU/H	Good Combustion Practices	0.083 lb/MMBtu	23.1 LB/H
STYRENE MONOMER PLANT	COS-MAR COMPANY	LA	02/11/2003	REHEATER HS-8220	195	MMBTU/H	Good Combustion Practices	0.083 lb/MMBtu	16.1 LB/H
CHEVRON PRODUCTS COMPANY, PASCAGOULA REFINERY	CHEVRON PRODUCTS COMPANY	MS	05/08/2007	FOUR PLATFORMER FEED/INTERSTAGE HEATER WITH A COMMON STACK	850	MMBTU/H		0.156 lb/MMBtu	133 LB/H
CHEVRON PRODUCTS COMPANY, PASCAGOULA REFINERY	CHEVRON PRODUCTS COMPANY	MS	05/08/2007	REFORMATE SPLITTER FURNACE	160	MMBTU/H		0.156 lb/MMBtu	25 LB/H
UNITED REFINERY CO.	UNITED REFINERY CO	PA	10/09/2003	DELAYED COKER UNIT, HEATER	116	MMBTU/H	Good Combustion Practices	0.071 lb/MMBtu	8.28 LB/H
UNITED REFINERY CO.	UNITED REFINERY CO	PA	10/09/2003	FCC FEED HYDROTREATER HEATER	91	MMBTU/H	Good Combustion Practices	0.082 lb/MMBtu	7.46 LB/H
UNITED REFINERY CO.	UNITED REFINERY CO	PA	10/09/2003	HYDROGEN REFORMER UNIT	344	MMBTU/H	Good Combustion Practices	0.082 lb/MMBtu	28.2 LB/H
UNITED REFINERY CO.	UNITED REFINERY CO	PA	10/09/2003	NORTH CRUDE HEATER	147	MMBTU/H	Good Combustion Practices	0.063 lb/MMBtu	9.27 LB/H
BAYTOWN OLEFINS PLANT	EXXON MOBIL CHEMICAL COMPANY	TX	04/05/2001	FURNACE OF-01	300	MMBTU/H	NONE INDICATED	0.083 lb/MMBtu	25 LB/H
BAYTOWN OLEFINS PLANT	EXXON MOBIL CHEMICAL COMPANY	TX	04/05/2001	FURNACE AF-01	350	MMBTU/H	NONE INDICATED	0.079 lb/MMBtu	27.5 LB/H
BAYTOWN OLEFINS PLANT	EXXON MOBIL CHEMICAL COMPANY	TX	04/05/2001	FURNACE CF-01	350	MMBTU/H	NONE INDICATED	0.079 lb/MMBtu	27.5 LB/H
BAYTOWN OLEFINS PLANT	EXXON MOBIL CHEMICAL COMPANY	TX	04/05/2001	FURNACE DF-01	350	MMBTU/H	NONE INDICATED	0.079 lb/MMBtu	27.5 LB/H
BAYTOWN OLEFINS PLANT	EXXON MOBIL CHEMICAL COMPANY	TX	04/05/2001	FURNACE EF-01	350	MMBTU/H	NONE INDICATED	0.079 lb/MMBtu	27.5 LB/H
BAYTOWN OLEFINS PLANT	EXXON MOBIL CHEMICAL COMPANY	TX	04/05/2001	FURNACE QF-01	300	MMBTU/H	NONE INDICATED	0.083 lb/MMBtu	25 LB/H
BAYTOWN OLEFINS PLANT	EXXON MOBIL CHEMICAL COMPANY	TX	04/05/2001	FURNACE BF-01	339	MMBTU/H	NONE INDICATED	0.079 lb/MMBtu	26.7 LB/H
BAYTOWN OLEFINS PLANT	EXXON MOBIL CHEMICAL COMPANY	TX	04/05/2001	(6) FURNACES, XAF-01 THRU XFF-01	333	MMBTU/H	NONE INDICATED	0.087 lb/MMBtu	29 LB/H
BAYTOWN OLEFINS PLANT	EXXON MOBIL CHEMICAL COMPANY	TX	04/05/2001	FURNACE XGF-01	502	MMBTU/H	NONE INDICATED	0.085 lb/MMBtu	42.8 LB/H
BAYTOWN OLEFINS PLANT	EXXON MOBIL CHEMICAL COMPANY	TX	04/05/2001	(2) FURNACES, IF-01	341	MMBTU/H	NONE INDICATED	0.084 lb/MMBtu	28.5 LB/H
BAYTOWN OLEFINS PLANT	EXXON MOBIL CHEMICAL COMPANY	TX	04/05/2001	FURNACE FF-01	350	MMBTU/H	NONE INDICATED	0.079 lb/MMBtu	27.5 LB/H
BAYTOWN OLEFINS PLANT	EXXON MOBIL CHEMICAL COMPANY	TX	04/05/2001	FURNACE GF-01	350	MMBTU/H	NONE INDICATED	0.079 lb/MMBtu	27.5 LB/H
BAYTOWN OLEFINS PLANT	EXXON MOBIL CHEMICAL COMPANY	TX	04/05/2001	FURNACE HF-01	238	MMBTU/H	NONE INDICATED	0.079 lb/MMBtu	18.7 LB/H
LYONDELL - CITGO REFINING, LP	LYONDELL - CITGO REFINING, LP	TX	03/14/2002	BTU- NO.3 REACTOR FEED HEATER	58.95	MMBTU/H	NONE INDICATED	0.083 lb/MMBtu	4.9 LB/H
LYONDELL - CITGO REFINING, LP	LYONDELL - CITGO REFINING, LP	TX	03/14/2002	BTU-NO.4 REACTOR FEED HEATER	49	MMBTU/H	NONE INDICATED	0.082 lb/MMBtu	4 LB/H
LYONDELL - CITGO REFINING, LP	LYONDELL - CITGO REFINING, LP	TX	03/14/2002	BTU-REFORMATE STABILIZER REBOILER	54.77	MMBTU/H	NONE INDICATED	0.082 lb/MMBtu	4.5 LB/H
LYONDELL - CITGO REFINING, LP	LYONDELL - CITGO REFINING, LP	TX	03/14/2002	ISOM II WEST REACTOR FEED HEATER	104.25	MMBTU/H	NONE INDICATED	0.082 lb/MMBtu	8.6 LB/H

Table C-1 Results of RBLC Search for Heaters (CO) 12/15/2011

Facility Name	Company Name	State	Date	Process Name	Throughput		Control Method	Emission Limit	
LYONDELL - CITGO REFINING, LP	LYONDELL - CITGO REFINING, LP	TX	03/14/2002	ISOM II COMBINATION SPLITTER HEATER	77.62	MMBTU/H	NONE INDICATED	0.082 lb/MMBtu	6.4 LB/H
LYONDELL - CITGO REFINING, LP	LYONDELL - CITGO REFINING, LP	TX	03/14/2002	ISOM II XYLENE RERUN TOWER HEATER	83.7	MMBTU/H	NONE INDICATED	0.082 lb/MMBtu	6.9 LB/H
LYONDELL - CITGO REFINING, LP	LYONDELL - CITGO REFINING, LP	TX	03/14/2002	ISOM II EAST REACTOR FEED HEATER	75	MMBTU/H	NONE INDICATED	0.083 lb/MMBtu	6.2 LB/H
LYONDELL - CITGO REFINING, LP	LYONDELL - CITGO REFINING, LP	TX	03/14/2002	ORTHOXYLENE I HEATER	96.23	MMBTU/H	NONE INDICATED	0.082 lb/MMBtu	7.9 LB/H
LYONDELL - CITGO REFINING, LP	LYONDELL - CITGO REFINING, LP	TX	03/14/2002	ORTHOXYLENE II HEATER	226.42	MMBTU/H	NONE INDICATED	0.082 lb/MMBtu	18.6 LB/H
LYONDELL - CITGO REFINING, LP	LYONDELL - CITGO REFINING, LP	TX	03/14/2002	BTU-NO. 1 REACTOR FEED HEATER	121.74	MMBTU/H	NONE INDICATED	0.082 lb/MMBtu	10 LB/H
LYONDELL - CITGO REFINING, LP	LYONDELL - CITGO REFINING, LP	TX	03/14/2002	BTU-NO.2 REACTOR FEED HEATER	69.68	MMBTU/H	NONE INDICATED	0.082 lb/MMBtu	5.7 LB/H
LYONDELL - CITGO REFINING, LP	LYONDELL - CITGO REFINING, LP	TX	03/14/2002	BENZENE STABILIZER HEATER	38.34	MMBTU/H	NONE INDICATED	0.083 lb/MMBtu	3.2 LB/H
FORMOSA POINT COMFORT PLANT	FORMOSA PLASTICS CORPORATION TEXAS	TX	05/09/2005	PYROLYSIS FURNACE (1010B)	250	MMBtu/H		0.035 lb/MMBtu	8.75 LB/H
FORMOSA POINT COMFORT PLANT	FORMOSA PLASTICS CORPORATION TEXAS	TX	05/09/2005	PYROLYSIS FURNACES (1001-1008, 1009 B)	250	MMBtu/h		0.033 lb/MMBtu	8.2 LB/H
FORMOSA POINT COMFORT PLANT	FORMOSA PLASTICS CORPORATION TEXAS	TX	05/09/2005	REBOILER (1 AND 2)	250	MMBtu		0.004 lb/MMBtu	1.02 LB/H
FORMOSA POINT COMFORT PLANT	FORMOSA PLASTICS CORPORATION TEXAS	TX	05/09/2005	PYROLYSIS FURNACE (1054-1056)	250	mmbtu/h		0.050 lb/MMBtu	12.6 LB/H
FORMOSA POINT COMFORT PLANT	FORMOSA PLASTICS CORPORATION TEXAS	TX	05/09/2005	PYROLYSIS FURNACE (1057-1062, 1091)	250	MMBTU/h		0.034 lb/MMBtu	8.54 LB/H
FORMOSA POINT COMFORT PLANT	FORMOSA PLASTICS CORPORATION TEXAS	TX	05/09/2005	PYROLYSIS FURNACE (N1011-1012)	250	MMBTU/H		0.035 lb/MMBtu	8.75 LB/H
FORMOSA POINT COMFORT PLANT	FORMOSA PLASTICS CORPORATION TEXAS	TX	05/09/2005	REGENERATION HEATER					0.67 LB/H
FORMOSA POINT COMFORT PLANT	FORMOSA PLASTICS CORPORATION TEXAS	TX	05/09/2005	SECOND STAGE FEED HEATER					0.01 LB/H
CITGO CORPUS CHRISTI REFINERY - WEST PLANT	CITGO REFINING AND CHEMICALS COMAPNY LP	TX	04/20/2005	DHT STRIPPER REBOILER					7 LB/H
CITGO CORPUS CHRISTI REFINERY - WEST PLANT	CITGO REFINING AND CHEMICALS COMAPNY LP	TX	04/20/2005	COKER HEATER	291	MMBUT/H		0.082 lb/MMBtu	23.9 LB/H
CITGO CORPUS CHRISTI REFINERY - WEST PLANT	CITGO REFINING AND CHEMICALS COMAPNY LP	TX	04/20/2005	MIXED DISTILLATE HYDROHEATER	62	MMBTU/H		0.082 lb/MMBtu	5.1 LB/H
CITGO CORPUS CHRISTI REFINERY - WEST PLANT	CITGO REFINING AND CHEMICALS COMAPNY LP	TX	04/20/2005	MIXED DISTILLATE HYDROHEATER REBOILER HEATER	82	MMBTU/H		0.083 lb/MMBtu	6.8 LB/H
CITGO CORPUS CHRISTI REFINERY - WEST PLANT	CITGO REFINING AND CHEMICALS COMAPNY LP	TX	04/20/2005	DHT CHARGER HEATER					7.8 LB/H
ARIZONA CLEAN FUELS YUMA	ARIZONA CLEAN FUELS YUMA LLC	AZ	04/14/2005	DISTILLATE HYDROTREATER CHARGE HEATER	25	MMBTU/H		0.04 lb/MMBtu	
ARIZONA CLEAN FUELS YUMA	ARIZONA CLEAN FUELS YUMA LLC	AZ	04/14/2005	DISTILLATE HYDROTREATER SPLITTER REBOILER	117	MMBTU/H		0.04 lb/MMBtu	
ARIZONA CLEAN FUELS YUMA	ARIZONA CLEAN FUELS YUMA LLC	AZ	04/14/2005	CATALYTIC REFORMING UNIT CHARGE HEATER	122	MMBTU/H		0.04 lb/MMBtu	
ARIZONA CLEAN FUELS YUMA	ARIZONA CLEAN FUELS YUMA LLC	AZ	04/14/2005	CATALYTIC REFORMING UNIT INTERHEATER NO. 1	192	MMBTU/H		0.04 lb/MMBtu	
ARIZONA CLEAN FUELS YUMA	ARIZONA CLEAN FUELS YUMA LLC	AZ	04/14/2005	CATALYTIC REFORMING UNIT INTERHEATER NO. 2	129	MMBTU/H		0.04 lb/MMBtu	
ARIZONA CLEAN FUELS YUMA	ARIZONA CLEAN FUELS YUMA LLC	AZ	04/14/2005	CATALYTIC REFORMING UNIT DEBUTANIZER REBOILER	23.2	MMBTU/H		0.04 lb/MMBtu	
ARIZONA CLEAN FUELS YUMA	ARIZONA CLEAN FUELS YUMA LLC	AZ	04/14/2005	BUTANE CONVERSION UNIT DEHYDROGENATION REACTOR CHARGE HEATER	311	MMBTU/H		0.04 lb/MMBtu	

Table C-1 Results of RBLC Search for Heaters (CO) 12/15/2011

Facility Name	Company Name	State	Date	Process Name	Throughput		Control Method	Emission Limit	
ARIZONA CLEAN FUELS YUMA	ARIZONA CLEAN FUELS YUMA LLC	AZ	04/14/2005	BUTANE CONVERSION UNIT DEHYDROGENATION REACTOR INTERHEATER	328	MMBTU/H		0.04 lb/MMBtu	
ARIZONA CLEAN FUELS YUMA	ARIZONA CLEAN FUELS YUMA LLC	AZ	04/14/2005	VACUUM CRUDE CHARGE HEATER	101	MMBTU/H		0.04 lb/MMBtu	
ARIZONA CLEAN FUELS YUMA	ARIZONA CLEAN FUELS YUMA LLC	AZ	04/14/2005	HYDROCRACKER UNIT CHARGE HEATER	70	MMBTU/H		0.04 lb/MMBtu	
ARIZONA CLEAN FUELS YUMA	ARIZONA CLEAN FUELS YUMA LLC	AZ	04/14/2005	HYDROCRACKER UNIT MAIN FRACTIONATOR HEATER	211	MMBTU/H		0.04 lb/MMBtu	
ARIZONA CLEAN FUELS YUMA	ARIZONA CLEAN FUELS YUMA LLC	AZ	04/14/2005	NAPHTHA HYDROTREATER CHARGE HEATER	21.4	MMBTU/H		0.04 lb/MMBtu	
ARIZONA CLEAN FUELS YUMA	ARIZONA CLEAN FUELS YUMA LLC	AZ	04/14/2005	BUTANE CONVERSION UNIT ISOSTRIPPER REBOILER	222	MMBTU/H		0.04 lb/MMBtu	
ARIZONA CLEAN FUELS YUMA	ARIZONA CLEAN FUELS YUMA LLC	AZ	04/14/2005	ATMOSPHERIC CRUDE CHARGE HEATER	346	MMBTU/H		0.04 lb/MMBtu	
ARIZONA CLEAN FUELS YUMA	ARIZONA CLEAN FUELS YUMA LLC	AZ	04/14/2005	SPRAY DRYER HEATER	44	MMBTU/H		0.04 lb/MMBtu	
ARIZONA CLEAN FUELS YUMA	ARIZONA CLEAN FUELS YUMA LLC	AZ	04/14/2005	DELAYED COKING UNIT CHARGE HEATER NOS. 1 AND 2	99.5	MMBTU/H		0.04 lb/MMBtu	
PLAQUEMINE PVC PLANT	SHINTECH LOUISIANA LLC	LA	02/27/2009	CRACKING FURNACES A-D	90	MMBTU/H	Good Combustion Practices	0.046 lb/MMBtu	
BATON ROUGE REFINERY	EXXONMOBIL REFINING & SUPPLY CO	LA	02/18/2004	PIPESTILL, COKER, HYDROCRACKING, LIGHT ENDS FURNACES			Good Design & Combustion Practices	0.082 lb/MMBtu	
BATON ROUGE REFINERY	EXXONMOBIL REFINING & SUPPLY CO	LA	02/18/2004	PIPESTILL, COKER, CAT COMPLEX, LIGHT ENDS FURNACES			Good Design & Combustion Practices	0.082 lb/MMBtu	
BATON ROUGE REFINERY	EXXONMOBIL REFINING & SUPPLY CO	LA	02/18/2004	REFORMING, HYDROFINING, HEAVY CAT FURNACES			Good Design & Combustion Practices	0.082 lb/MMBtu	
BATON ROUGE REFINERY	EXXONMOBIL REFINING & SUPPLY CO	LA	02/18/2004	FEED PREPARATION FURNACES F-30; F-31	352	MMBTU/H	Good Design & Combustion Practices	0.082 lb/MMBtu	
BATON ROUGE REFINERY	EXXONMOBIL REFINING & SUPPLY CO	LA	02/18/2004	POWERFORMING; LIGHT ENDS FURNACES			Good Design & Combustion Practices	0.082 lb/MMBtu	
BATON ROUGE REFINERY	EXXONMOBIL REFINING & SUPPLY CO	LA	02/18/2004	POWERFORMING 2; EAST LIGHT ENDS FURNACES			Good Design & Combustion Practices	0.082 lb/MMBtu	
GARYVILLE REFINERY	MARATHON PETROLEUM CO LLC	LA	12/27/2006	NAPHTHA HYDROTREATER REACTOR CHARGE HEATER (5-08), KHT REACTOR CHARGE HEATER (9-08); HCU TRAIN 1;2 REACTOR CHARGE HEATERS (11-08; 12-08)			Good Design & Combustion Practices	0.04 lb/MMBtu	
GARYVILLE REFINERY	MARATHON PETROLEUM CO LLC	LA	12/27/2006	NAPHTHA HYDROTREATER STRIPPER REBOILER HEATER (6-08), KHT STRIPPER REBOILER HEATER (10-08)			Good Design & Combustion Practices	0.04 lb/MMBtu	
GARYVILLE REFINERY	MARATHON PETROLEUM CO LLC	LA	12/27/2006	A; B CRUDE HEATERS (1-08; 2-08); COKER CHARGE HEATER (15-08)			Good Design & Combustion Practices	0.04 lb/MMBtu	
GARYVILLE REFINERY	MARATHON PETROLEUM CO LLC	LA	12/27/2006	PLATFORMER HEATER CELLS NO. 1-3 (7A-08, 7B-08, 7C-08); HCU FRACTIONATOR HEATER (13-08)			Good Design & Combustion Practices	0.04 lb/MMBtu	
GARYVILLE REFINERY	MARATHON PETROLEUM CO LLC	LA	12/27/2006	A, B VACUUM TOWER HEATERS (3-08; 4-08)	155.2	MMBTU/H	Good Design & Combustion Practices	0.04 lb/MMBtu	
ST. CHARLES REFINERY	VALERO REFINING - NEW ORLEANS, LLC	LA	11/17/2009	HEATERS/REBOILERS			Good Design & Combustion Practices	0.08 lb/MMBtu	
ST. CHARLES REFINERY	VALERO REFINING - NEW ORLEANS, LLC	LA	11/17/2009	HEATERS (2008-1 - 2008-9)			Comply w/ 40 CFR 60 Subparts NNN & F	0.08 lb/MMBtu	
ST. CHARLES REFINERY	VALERO REFINING - NEW ORLEANS, LLC	LA	11/17/2009	CPF HEATER H-39-03; H-39-02 (94-28; 94-30)			Good Design & Combustion Practices	0.08 lb/MMBtu	

Table C-1 Results of RBLC Search for Heaters (CO) 12/15/2011

Facility Name	Company Name	State	Date	Process Name	Throughput		Control Method	Emission Limit	
ST. CHARLES REFINERY	VALERO REFINING - NEW ORLEANS, LLC	LA	11/17/2009	DHT HEATERS (4-81, 5-81)	70	MMBTU/H	Good Design & Combustion Practices	0.08 lb/MMBtu	
SHELL OIL DEER PARK	SHELL OIL COMPANY	TX	07/30/2004	TWENTY ONE FURNACES				500 PPMV	
SHELL OIL DEER PARK	SHELL OIL COMPANY	TX	07/30/2004	FOURTEEN HEATERS				500 PPMV	
MCKEE REFINERY HYDROGEN PRODUCTION UNIT	DIAMOND SHAMROCK REFINING COMPANY L.P.A VALERO COM	TX	12/30/2010	Hydrogen Production Unit Furnace	355.65	MMBTU/H	Good combustion	50 PPMV	
PRAXAIR	PRAXAIR	CA	03/15/2002	HEATER-OTHER PROCESS	117.6	MMBTU/H		4000 PPMVD	

Table C-2 Results of RBLC Search for Heaters (PM) 12/15/2011

Facility Name	Company Name	State	Date	Process Name	Throughput		Control Method	Emission Limit	
BAYTOWN OLEFINS PLANT	EXXON MOBIL CHEMICAL COMPANY	TX	04/05/2001	FURNACE OF-01	300	MMBTU/H	NONE INDICATED	0.003 lb/mmbtu	1 lb/hr
BAYTOWN OLEFINS PLANT	EXXON MOBIL CHEMICAL COMPANY	TX	04/05/2001	FURNACE AF-01	350	MMBTU/H	NONE INDICATED	0.003 lb/mmbtu	1.1 lb/hr
BAYTOWN OLEFINS PLANT	EXXON MOBIL CHEMICAL COMPANY	TX	04/05/2001	FURNACE CF-01	350	MMBTU/H	NONE INDICATED	0.003 lb/mmbtu	1.1 lb/hr
BAYTOWN OLEFINS PLANT	EXXON MOBIL CHEMICAL COMPANY	TX	04/05/2001	FURNACE DF-01	350	MMBTU/H	NONE INDICATED	0.003 lb/mmbtu	1.1 lb/hr
BAYTOWN OLEFINS PLANT	EXXON MOBIL CHEMICAL COMPANY	TX	04/05/2001	FURNACE EF-01	350	MMBTU/H	NONE INDICATED	0.003 lb/mmbtu	1.1 lb/hr
BAYTOWN OLEFINS PLANT	EXXON MOBIL CHEMICAL COMPANY	TX	04/05/2001	FURNACE QF-01	300	MMBTU/H	NONE INDICATED	0.003 lb/mmbtu	1 lb/hr
BAYTOWN OLEFINS PLANT	EXXON MOBIL CHEMICAL COMPANY	TX	04/05/2001	FURNACE BF-01	339	MMBTU/H	NONE INDICATED	0.003 lb/mmbtu	1.05 lb/hr
BAYTOWN OLEFINS PLANT	EXXON MOBIL CHEMICAL COMPANY	TX	04/05/2001	(6) FURNACES, XAF-01 THRU XFF-01	333	MMBTU/H	NONE INDICATED	0.004 lb/mmbtu	1.33 lb/hr
BAYTOWN OLEFINS PLANT	EXXON MOBIL CHEMICAL COMPANY	TX	04/05/2001	(2) FURNACES, IF-01 & JF-01	341	MMBTU/H	NONE INDICATED	0.003 lb/mmbtu	1.05 lb/hr
BAYTOWN OLEFINS PLANT	EXXON MOBIL CHEMICAL COMPANY	TX	04/05/2001	FURNACE FF-01	350	MMBTU/H	NONE INDICATED	0.003 lb/mmbtu	1.1 lb/hr
BAYTOWN OLEFINS PLANT	EXXON MOBIL CHEMICAL COMPANY	TX	04/05/2001	FURNACE GF-01	350	MMBTU/H	NONE INDICATED	0.003 lb/mmbtu	1.1 lb/hr
BAYTOWN OLEFINS PLANT	EXXON MOBIL CHEMICAL COMPANY	TX	04/05/2001	FURNACE HF-01	238	MMBTU/H	NONE INDICATED	0.003 lb/mmbtu	0.73 lb/hr
LYONDELL - CITGO REFINING, LP	LYONDELL - CITGO REFINING, LP	TX	03/14/2002	BOILER NO. 13	366.8	MMBTU/H	Clean Gaseous Fuel	0.007 lb/mmbtu	2.73 lb/hr
LYONDELL - CITGO REFINING, LP	LYONDELL - CITGO REFINING, LP	TX	03/14/2002	BOILERS 14 AND 15	586	MMBTU/H	Clean Gaseous Fuel	0.007 lb/mmbtu	4.37 lb/hr
LYONDELL - CITGO REFINING, LP	LYONDELL - CITGO REFINING, LP	TX	03/14/2002	BTU- NO.3 REACTOR FEED HEATER	58.95	MMBTU/H	Clean Gaseous Fuel	0.013 lb/mmbtu	0.75 lb/hr
LYONDELL - CITGO REFINING, LP	LYONDELL - CITGO REFINING, LP	TX	03/14/2002	BTU-NO.4 REACTOR FEED HEATER	49	MMBTU/H	Clean Gaseous Fuel	0.013 lb/mmbtu	0.63 lb/hr
LYONDELL - CITGO REFINING, LP	LYONDELL - CITGO REFINING, LP	TX	03/14/2002	BTU-REFORMATE STABILIZER REBOILER	54.77	MMBTU/H	Clean Gaseous Fuel	0.013 lb/mmbtu	0.7 lb/hr
LYONDELL - CITGO REFINING, LP	LYONDELL - CITGO REFINING, LP	TX	03/14/2002	ISOM II WEST REACTOR FEED HEATER	104.3	MMBTU/H	Clean Gaseous Fuel	0.013 lb/mmbtu	1.33 lb/hr
LYONDELL - CITGO REFINING, LP	LYONDELL - CITGO REFINING, LP	TX	03/14/2002	ISOM II COMBINATION SPLITTER HEATER	77.62	MMBTU/H	Clean Gaseous Fuel	0.013 lb/mmbtu	0.99 lb/hr
LYONDELL - CITGO REFINING, LP	LYONDELL - CITGO REFINING, LP	TX	03/14/2002	ISOM II XYLENE RERUN TOWER HEATER	83.7	MMBTU/H	Clean Gaseous Fuel	0.013 lb/mmbtu	1.06 lb/hr
LYONDELL - CITGO REFINING, LP	LYONDELL - CITGO REFINING, LP	TX	03/14/2002	ISOM II EAST REACTOR FEED HEATER	75	MMBTU/H	Clean Gaseous Fuel	0.013 lb/mmbtu	0.96 lb/hr
LYONDELL - CITGO REFINING, LP	LYONDELL - CITGO REFINING, LP	TX	03/14/2002	ORTHOXYLENE I HEATER	96.23	MMBTU/H	Clean Gaseous Fuel	0.013 lb/mmbtu	1.23 lb/hr
LYONDELL - CITGO REFINING, LP	LYONDELL - CITGO REFINING, LP	TX	03/14/2002	ORTHOXYLENE II HEATER	226.4	MMBTU/H	Clean Gaseous Fuel	0.013 lb/mmbtu	2.89 lb/hr
LYONDELL - CITGO REFINING, LP	LYONDELL - CITGO REFINING, LP	TX	03/14/2002	BTU-NO. 1 REACTOR FEED HEATER	121.7	MMBTU/H	Clean Gaseous Fuel	0.013 lb/mmbtu	1.56 lb/hr
LYONDELL - CITGO REFINING, LP	LYONDELL - CITGO REFINING, LP	TX	03/14/2002	BTU-NO.2 REACTOR FEED HEATER	69.68	MMBTU/H	Clean Gaseous Fuel	0.013 lb/mmbtu	0.89 lb/hr
LYONDELL - CITGO REFINING, LP	LYONDELL - CITGO REFINING, LP	TX	03/14/2002	BENZENE STABILIZER HEATER	38.34	MMBTU/H	Clean Gaseous Fuel	0.008 lb/mmbtu	0.29 lb/hr

Table C-2 Results of RBLC Search for Heaters (PM) 12/15/2011

Facility Name	Company Name	State	Date	Process Name	Throughput		Control Method	Emission Limit	
LYONDELL - CITGO REFINING, LP	LYONDELL - CITGO REFINING, LP	TX	03/14/2002	BOILER NO. 12	245	MMBTU/H	Clean Gaseous Fuel	0.007 lb/mmbtu	1.83 lb/hr
FORMOSA POINT COMFORT PLANT	FORMOSA PLASTICS CORPORATION TEXAS	TX	05/09/2005	PYROLYSIS FURNACE (1054-1056)	250	mmbtu/h		0.002 lb/mmbtu	0.51 lb/hr
FORMOSA POINT COMFORT PLANT	FORMOSA PLASTICS CORPORATION TEXAS	TX	05/09/2005	PYROLYSIS FURNACE (1057-1062, 1091)	250	MMBTU/h		0.002 lb/mmbtu	0.51 lb/hr
FORMOSA POINT COMFORT PLANT	FORMOSA PLASTICS CORPORATION TEXAS	TX	05/09/2005	PYROLYSIS FURNACE (N1011-1012)	250	MMBTU/H		0.004 lb/mmbtu	0.99 lb/hr
FORMOSA POINT COMFORT PLANT	FORMOSA PLASTICS CORPORATION TEXAS	TX	05/09/2005	REGENERATION HEATER					0.15 lb/hr
FORMOSA POINT COMFORT PLANT	FORMOSA PLASTICS CORPORATION TEXAS	TX	05/09/2005	SECOND STAGE FEED HEATER					0.05 lb/hr
CONVENT REFINERY	MOTIVA ENTERPRISES LLC	LA	05/17/2002	H-OIL TRANSPORT HEATER	21	MMBTU/H	Good Combustion Practice	0.008 lb/mmbtu	0.16 lb/hr
CONVENT REFINERY	MOTIVA ENTERPRISES LLC	LA	05/17/2002	H-OIL ATM. TOWER HEATER	29.4	MMBTU/H	Good Combustion Practice	0.007 lb/mmbtu	0.22 lb/hr
CONVENT REFINERY	MOTIVA ENTERPRISES LLC	LA	05/17/2002	HDS-1 HEATER	140	MMBTU/H	Good Combustion Practice	0.007 lb/mmbtu	1.04 lb/hr
BATON ROUGE REFINERY	EXXONMOBIL REFINING AND SUPPLY COMPANY	LA	04/26/2002	FRACTIONATOR FURNACE	360	MMBTU/H	Good Combustion Practices, Good Design, & Clean Fuel	0.008 lb/mmbtu	2.88 lb/hr
BATON ROUGE REFINERY	EXXONMOBIL REFINING AND SUPPLY COMPANY	LA	04/26/2002	HYDROFINER FURNACE 1	150	MMBTU/H	Good Combustion Practices, Good Design, & Clean Fuel	0.008 lb/mmbtu	1.2 lb/hr
BATON ROUGE REFINERY	EXXONMOBIL REFINING AND SUPPLY COMPANY	LA	04/26/2002	HYDROFINER FURNACE 2	197	MMBTU/H	Good Combustion Practices, Good Design, & Clean Fuel	0.008 lb/mmbtu	1.58 lb/hr
STYRENE MONOMER PLANT	COS-MAR COMPANY	LA	02/11/2003	PROCESS SUPERHEATER HF-1201/1219	298.9	MMBTU/H	Clean burning fuels	0.0074 lb/mmbtu	2.2 lb/hr
STYRENE MONOMER PLANT	COS-MAR COMPANY	LA	02/11/2003	BZ RECOVERY COLUMN HEATER HS-2103	182.1	MMBTU/H	Clean burning fuels	0.0077 lb/mmbtu	1.4 lb/hr
STYRENE MONOMER PLANT	COS-MAR COMPANY	LA	02/11/2003	EB RECOVERY COLUMN HEATER HS-2104	269.3	MMBTU/H	Clean burning fuels	0.0074 lb/mmbtu	2 lb/hr
STYRENE MONOMER PLANT	COS-MAR COMPANY	LA	02/11/2003	PEB RECOVERY COLUMN HEATER HS-2105	25.2	MMBTU/H	Clean burning fuels	0.0075 lb/mmbtu	0.19 lb/hr
STYRENE MONOMER PLANT	COS-MAR COMPANY	LA	02/11/2003	PROCESS SUPERHEATER HS-8201/8219	280	MMBTU/H	Clean burning fuels	0.0075 lb/mmbtu	2.1 lb/hr
STYRENE MONOMER PLANT	COS-MAR COMPANY	LA	02/11/2003	REHEATER HS-8220	195	MMBTU/H	Clean burning fuels	0.0077 lb/mmbtu	1.5 lb/hr
PONCA CITY REF	CONOCOPHILLIPS PONCA CITY REFINERY	OK	03/31/2004	CRUDE VACUUM UNIT, HEATER H-0016			Good Combustion Practice		0.8 lb/hr
PONCA CITY REF	CONOCOPHILLIPS PONCA CITY REFINERY	OK	03/31/2004	CRUDE CHARGE UNIT, HEATER H-0001			Good Combustion Practice		1.31 lb/hr
UNITED REFINERY CO.	UNITED REFINERY CO	PA	10/09/2003	DELAYED COKER UNIT, HEATER	116	MMBTU/H	SPRAY CHAMBER, GOOD COMBUSTION PRACTICE	0.0009 lb/mmbtu	0.1 lb/hr
UNITED REFINERY CO.	UNITED REFINERY CO	PA	10/09/2003	FCC FEED HYDROTREATER HEATER	91	MMBTU/H	GOOD COMBUSTION PRACTICE	0.001 lb/mmbtu	0.09 lb/hr
UNITED REFINERY CO.	UNITED REFINERY CO	PA	10/09/2003	HYDROGEN REFORMER UNIT	344	MMBTU/H	GOOD COMBUSTION PRACTICE	0.0047 lb/mmbtu	1.6 lb/hr
BAYTOWN OLEFINS PLANT	EXXON MOBIL CHEMICAL COMPANY	TX	04/05/2001	(6) DECOKING STACKS XAF-01 THRU XFF-01			NONE INDICATED		8.35 lb/hr
BAYTOWN OLEFINS PLANT	EXXON MOBIL CHEMICAL COMPANY	TX	04/05/2001	FURNACE XGF-01	502	MMBTU/H	NONE INDICATED	0.004 lb/mmbtu	2 lb/hr
FORMOSA POINT COMFORT PLANT	FORMOSA PLASTICS CORPORATION TEXAS	TX	05/09/2005	PYROLYSIS FURNACE (1010B)	250	MMBtu/H		0.002 lb/mmbtu	0.5 lb/hr
FORMOSA POINT COMFORT PLANT	FORMOSA PLASTICS CORPORATION TEXAS	TX	05/09/2005	PYROLYSIS FURNACES (1001-1008, 1009 B)	250	MMBtu/h		0.002 lb/mmbtu	0.5 lb/hr
FORMOSA POINT COMFORT PLANT	FORMOSA PLASTICS CORPORATION TEXAS	TX	05/09/2005	REBOILER (1 AND 2)	250	MMBtu		0.0001 lb/mmbtu	0.03 lb/hr
CITGO CORPUS CHRISTI REFINERY - WEST PLANT	CITGO REFINING AND CHEMICALS COMAPNY LP	TX	04/20/2005	DHT STRIPPER REBOILER					0.64 lb/hr
CITGO CORPUS CHRISTI REFINERY - WEST PLANT	CITGO REFINING AND CHEMICALS COMAPNY LP	TX	04/20/2005	COKER HEATER	291	MMBUT/H		0.0076 lb/mmbtu	2.2 lb/hr
CITGO CORPUS CHRISTI REFINERY - WEST PLANT	CITGO REFINING AND CHEMICALS COMAPNY LP	TX	04/20/2005	MIXED DISTILLATE HYDROHEATER	62	MMBTU/H		0.0074 lb/mmbtu	0.46 lb/hr
CITGO CORPUS CHRISTI REFINERY - WEST PLANT	CITGO REFINING AND CHEMICALS COMAPNY LP	TX	04/20/2005	NO.3 BOILER	99	MMBTU/H		0.0075 lb/mmbtu	0.74 lb/hr

Table C-2 Results of RBLC Search for Heaters (PM) 12/15/2011

Facility Name	Company Name	State	Date	Process Name	Throughput		Control Method	Emission Limit	
CITGO CORPUS CHRISTI REFINERY - WEST PLANT	CITGO REFINING AND CHEMICALS COMAPNY LP	TX	04/20/2005	MIXED DISTILLATE HYDROHEATER REBOILER HEATER	82	MMBTU/H		0.0074 lb/mmbtu	0.61 lb/hr
CITGO CORPUS CHRISTI REFINERY - WEST PLANT	CITGO REFINING AND CHEMICALS COMAPNY LP	TX	04/20/2005	DHT CHARGER HEATER					0.71 lb/hr
VIRTEX PETROLEUM COMPANY DOERING RANCH GAS PLANT	VIRTEX PETROLEUM INC.	TX	05/05/2005	1.8 MMBTU AMINE REBOILER	1.8	MMBTU		0.0056 lb/mmbtu	0.01 lb/hr
VIRTEX PETROLEUM COMPANY DOERING RANCH GAS PLANT	VIRTEX PETROLEUM INC.	TX	05/05/2005	1.0 MMBTU DEHY REBOILER	1	MMBtu		0.01 lb/mmbtu	0.01 lb/hr
ST. CHARLES REFINERY	VALERO REFINING - NEW ORLEANS, LLC	LA	11/17/2009	BOILERS (94-43 & 94-45)	354	MMBTU/H	CLEAN FUELS	0.0075 lb/mmbtu	2.64 lb/hr
BATON ROUGE REFINERY	EXXONMOBIL REFINING & SUPPLY CO	LA	02/18/2004	REFORMING, HYDROFINING, & HEAVY CAT FURNACES			GOOD DESIGN & PROPER COMBUSTION PRACTICES	0.008 LB/MMBT	
ARIZONA CLEAN FUELS YUMA	ARIZONA CLEAN FUELS YUMA LLC	AZ	04/14/2005	DISTILLATE HYDROTREATER CHARGE HEATER	25	MMBTU/H		0.0075 LB/MMBTU	
ARIZONA CLEAN FUELS YUMA	ARIZONA CLEAN FUELS YUMA LLC	AZ	04/14/2005	DISTILLATE HYDROTREATER SPLITTER REBOILER	117	MMBTU/H		0.0075 LB/MMBTU	
ARIZONA CLEAN FUELS YUMA	ARIZONA CLEAN FUELS YUMA LLC	AZ	04/14/2005	CATALYTIC REFORMING UNIT CHARGE HEATER	122	MMBTU/H		0.0075 LB/MMBTU	
ARIZONA CLEAN FUELS YUMA	ARIZONA CLEAN FUELS YUMA LLC	AZ	04/14/2005	CATALYTIC REFORMING UNIT INTERHEATER NO. 1	192	MMBTU/H		0.0075 LB/MMBTU	
ARIZONA CLEAN FUELS YUMA	ARIZONA CLEAN FUELS YUMA LLC	AZ	04/14/2005	CATALYTIC REFORMING UNIT INTERHEATER NO. 2	129	MMBTU/H		0.0075 LB/MMBTU	
ARIZONA CLEAN FUELS YUMA	ARIZONA CLEAN FUELS YUMA LLC	AZ	04/14/2005	CATALYTIC REFORMING UNIT DEBUTANIZER REBOILER	23.2	MMBTU/H		0.0075 LB/MMBTU	
ARIZONA CLEAN FUELS YUMA	ARIZONA CLEAN FUELS YUMA LLC	AZ	04/14/2005	BUTANE CONVERSION UNIT DEHYDROGENATION REACTOR CHARGE HEATER	311	MMBTU/H		0.0075 LB/MMBTU	
ARIZONA CLEAN FUELS YUMA	ARIZONA CLEAN FUELS YUMA LLC	AZ	04/14/2005	BUTANE CONVERSION UNIT DEHYDROGENATION REACTOR INTERHEATER	328	MMBTU/H		0.0075 LB/MMBTU	
ARIZONA CLEAN FUELS YUMA	ARIZONA CLEAN FUELS YUMA LLC	AZ	04/14/2005	VACUUM CRUDE CHARGE HEATER	101	MMBTU/H		0.0075 LB/MMBTU	
ARIZONA CLEAN FUELS YUMA	ARIZONA CLEAN FUELS YUMA LLC	AZ	04/14/2005	HYDROCRACKER UNIT CHARGE HEATER	70	MMBTU/H		0.0075 LB/MMBTU	
ARIZONA CLEAN FUELS YUMA	ARIZONA CLEAN FUELS YUMA LLC	AZ	04/14/2005	HYDROCRACKER UNIT MAIN FRACTIONATOR HEATER	211	MMBTU/H		0.0075 LB/MMBTU	
ARIZONA CLEAN FUELS YUMA	ARIZONA CLEAN FUELS YUMA LLC	AZ	04/14/2005	NAPHTHA HYDROTREATER CHARGE HEATER	21.4	MMBTU/H		0.0075 LB/MMBTU	
ARIZONA CLEAN FUELS YUMA	ARIZONA CLEAN FUELS YUMA LLC	AZ	04/14/2005	BUTANE CONVERSION UNIT ISOSTRIPPER REBOILER	222	MMBTU/H		0.0075 LB/MMBTU	
ARIZONA CLEAN FUELS YUMA	ARIZONA CLEAN FUELS YUMA LLC	AZ	04/14/2005	ATMOSPHERIC CRUDE CHARGE HEATER	346	MMBTU/H	Good Combustion Practice	0.0075 LB/MMBTU	
ARIZONA CLEAN FUELS YUMA	ARIZONA CLEAN FUELS YUMA LLC	AZ	04/14/2005	SPRAY DRYER HEATER	44	MMBTU/H		0.0075 LB/MMBTU	
ARIZONA CLEAN FUELS YUMA	ARIZONA CLEAN FUELS YUMA LLC	AZ	04/14/2005	DELAYED COKING UNIT CHARGE HEATER NOS. 1 AND 2	99.5	MMBTU/H		0.0075 LB/MMBTU	
PLAQUEMINE PVC PLANT	SHINTECH LOUISIANA LLC	LA	02/27/2009	BOILERS A & B (U-1 & U-2)	250	MMBTU/H	Good Combustion Practice	0.005 LB/MMBTU	
PLAQUEMINE PVC PLANT	SHINTECH LOUISIANA LLC	LA	02/27/2009	BOILERS C & D (U-3 & U-4)	250	MMBTU/H	Good Combustion Practice	0.005 LB/MMBTU	
PLAQUEMINE PVC PLANT	SHINTECH LOUISIANA LLC	LA	02/27/2009	CRACKING FURNACES A-D	90	MMBTU/H	Good Combustion Practice	0.007 LB/MMBTU	
BATON ROUGE REFINERY	EXXONMOBIL REFINING & SUPPLY CO	LA	02/18/2004	PIPESTILL, COKER, HYDROCRACKING, & LIGHT ENDS FURNACES			GOOD DESIGN & PROPER COMBUSTION PRACTICES	0.008 LB/MMBTU	
BATON ROUGE REFINERY	EXXONMOBIL REFINING & SUPPLY CO	LA	02/18/2004	PIPESTILL, COKER, CAT COMPLEX, & LIGHT ENDS FURNACES			GOOD DESIGN & PROPER COMBUSTION PRACTICES	0.008 LB/MMBTU	
BATON ROUGE REFINERY	EXXONMOBIL REFINING & SUPPLY CO	LA	02/18/2004	FEED PREPARATION FURNACES F-30 & F-31	352	MMBTU/H	GOOD DESIGN & PROPER COMBUSTION PRACTICES	0.008 LB/MMBTU	
BATON ROUGE REFINERY	EXXONMOBIL REFINING & SUPPLY CO	LA	02/18/2004	POWERFORMING & LIGHT ENDS FURNACES			GOOD DESIGN & PROPER COMBUSTION PRACTICES	0.008 LB/MMBTU	

Table C-2 Results of RBLC Search for Heaters (PM) 12/15/2011

Facility Name	Company Name	State	Date	Process Name	Throughput		Control Method	Emission Limit	
BATON ROUGE REFINERY	EXXONMOBIL REFINING & SUPPLY CO	LA	02/18/2004	POWERFORMING 2 & EAST LIGHT ENDS FURNACES			GOOD DESIGN & PROPER COMBUSTION PRACTICES	0.008 LB/MMBTU	
GARYVILLE REFINERY	MARATHON PETROLEUM CO LLC	LA	12/27/2006	NAPHTHA HYDRO TREATER REACTOR CHARGE HEATER (5-08), KHT REACTOR CHARGE HEATER (9-08), & HCU TRAIN 1&2 REACTOR CHARGE			GOOD DESIGN & PROPER COMBUSTION PRACTICES	0.0075 LB/MMBTU	
GARYVILLE REFINERY	MARATHON PETROLEUM CO LLC	LA	12/27/2006	HEATER (6-08) & KHT STRIPPER REBOILER HEATER (10-08)			GOOD DESIGN & PROPER COMBUSTION PRACTICES	0.0075 LB/MMBTU	
GARYVILLE REFINERY	MARATHON PETROLEUM CO LLC	LA	12/27/2006	BOILER NO. 1 (16-08)	525.7	MMBTU/H	GOOD DESIGN & PROPER COMBUSTION PRACTICES	0.0075 LB/MMBTU	
GARYVILLE REFINERY	MARATHON PETROLEUM CO LLC	LA	12/27/2006	A & B CRUDE HEATERS (1-08 & 2-08) & COKER CHARGE HEATER (15-08)			GOOD DESIGN & PROPER COMBUSTION PRACTICES	0.0075 LB/MMBTU	
GARYVILLE REFINERY	MARATHON PETROLEUM CO LLC	LA	12/27/2006	& 7C-08) & HCU FRACTIONATOR HEATER (13-08)			GOOD DESIGN & PROPER COMBUSTION PRACTICES	0.0075 LB/MMBTU	
GARYVILLE REFINERY	MARATHON PETROLEUM CO LLC	LA	12/27/2006	A & B VACUUM TOWER HEATERS (3-08 & 4-08)	155.2	MMBTU/H	GOOD DESIGN & PROPER COMBUSTION PRACTICES	0.0075 LB/MMBTU	
ST. CHARLES REFINERY	VALERO REFINING - NEW ORLEANS, LLC	LA	11/17/2009	CPF HEATER H-39-03 & H-39-02 (94-28 & 94-30)			GOOD DESIGN & PROPER COMBUSTION PRACTICES	0.0074 LB/MMBTU	
ST. CHARLES REFINERY	VALERO REFINING - NEW ORLEANS, LLC	LA	11/17/2009	HEATERS/REBOILERS			GOOD DESIGN & PROPER COMBUSTION PRACTICES	0	
ST. CHARLES REFINERY	VALERO REFINING - NEW ORLEANS, LLC	LA	11/17/2009	HEATERS (2008-1 - 2008-9)			COMPLY WITH 40 CFR 60 SUBPARTS NNN AND RRR	0	
ST. CHARLES REFINERY	VALERO REFINING - NEW ORLEANS, LLC	LA	11/17/2009	HEATERS (94-21 & 94-29)			GOOD DESIGN & PROPER COMBUSTION PRACTICES	0	
ST. CHARLES REFINERY	VALERO REFINING - NEW ORLEANS, LLC	LA	11/17/2009	DHT HEATERS (4-81, 5-81)	70	MMBTU/H	GASEOUS FUELS	0	
ST. CHARLES REFINERY	VALERO REFINING - NEW ORLEANS, LLC	LA	11/17/2009	HEATER F-72-703 (7-81)	633	MMBTU/H	GASEOUS FUELS	0	

Table C-3 Results of RBLC Search for Heaters (VOC) 12/15/2011

Facility Name	Company Name	State	Date	Process Name	Throughput		Control Method	Emission Limit	
ALLIANCE REFINERY	CONOCOPHILLIPS CO	LA	07/21/2009	LOW SULFUR GASOLINE FEED HEATER NO. 1	138.12	MMBtu/hr	Good Combustion Practice & Design	0.0054 lb/mmbtu	0.74 LB/H
ST. CHARLES REFINERY	VALERO REFINING - NEW ORLEANS, LLC	LA	11/17/2009	BOILERS (94-43 & 94-45)	354	MMBtu/hr		0.0054 lb/mmbtu	1.91 LB/H
UNITED REFINERY CO.	UNITED REFINERY CO	PA	10/09/2003	DELAYED COKER UNIT, HEATER	116	MMBtu/hr	GOOD COMBUSTION PRACTICE	0.0047 lb/mmbtu	0.545 LB/H
UNITED REFINERY CO.	UNITED REFINERY CO	PA	10/09/2003	FCC FEED HYDROTREATER HEATER	91	MMBtu/hr	GOOD COMBUSTION PRACTICE	0.0054 lb/mmbtu	0.49 LB/H
UNITED REFINERY CO.	UNITED REFINERY CO	PA	10/09/2003	HYDROGEN REFORMER UNIT	344	MMBtu/hr	GOOD COMBUSTION PRACTICE	0.0030 lb/mmbtu	1.03 LB/H
BAYTOWN OLEFINS PLANT	EXXON MOBIL CHEMICAL COMPANY	TX	04/05/2001	FURNACE OF-01	300	MMBtu/hr	NONE INDICATED	0.0013 lb/mmbtu	0.39 LB/H
BAYTOWN OLEFINS PLANT	EXXON MOBIL CHEMICAL COMPANY	TX	04/05/2001	FURNACE AF-01	350	MMBtu/hr	NONE INDICATED	0.0013 lb/mmbtu	0.45 LB/H
BAYTOWN OLEFINS PLANT	EXXON MOBIL CHEMICAL COMPANY	TX	04/05/2001	FURNACE CF-01	350	MMBtu/hr	NONE INDICATED	0.0013 lb/mmbtu	0.45 LB/H
BAYTOWN OLEFINS PLANT	EXXON MOBIL CHEMICAL COMPANY	TX	04/05/2001	FURNACE DF-01	350	MMBtu/hr	NONE INDICATED	0.0013 lb/mmbtu	0.45 LB/H
BAYTOWN OLEFINS PLANT	EXXON MOBIL CHEMICAL COMPANY	TX	04/05/2001	FURNACE EF-01	350	MMBtu/hr	NONE INDICATED	0.0013 lb/mmbtu	0.45 LB/H
BAYTOWN OLEFINS PLANT	EXXON MOBIL CHEMICAL COMPANY	TX	04/05/2001	FURNACE QF-01	300	MMBtu/hr	NONE INDICATED	0.0013 lb/mmbtu	0.39 LB/H
BAYTOWN OLEFINS PLANT	EXXON MOBIL CHEMICAL COMPANY	TX	04/05/2001	FURNACE BF-01	339	MMBtu/hr	NONE INDICATED	0.0013 lb/mmbtu	0.43 LB/H
BAYTOWN OLEFINS PLANT	EXXON MOBIL CHEMICAL COMPANY	TX	04/05/2001	(6) FURNACES, XAF-01 THRU XFF-01	333	MMBtu/hr	NONE INDICATED	0.0062 lb/mmbtu	2.07 LB/H
BAYTOWN OLEFINS PLANT	EXXON MOBIL CHEMICAL COMPANY	TX	04/05/2001	FURNACE XGF-01	502	MMBtu/hr	NONE INDICATED	0.0008 lb/mmbtu	0.4 LB/H
BAYTOWN OLEFINS PLANT	EXXON MOBIL CHEMICAL COMPANY	TX	04/05/2001	(2) FURNACES, IF-01 & JF-01	341	MMBtu/hr	NONE INDICATED	0.0004 lb/mmbtu	0.12 LB/H
BAYTOWN OLEFINS PLANT	EXXON MOBIL CHEMICAL COMPANY	TX	04/05/2001	FURNACE FF-01	350	MMBtu/hr	NONE INDICATED	0.0013 lb/mmbtu	0.45 LB/H
BAYTOWN OLEFINS PLANT	EXXON MOBIL CHEMICAL COMPANY	TX	04/05/2001	FURNACE GF-01	350	MMBtu/hr	NONE INDICATED	0.0013 lb/mmbtu	0.45 LB/H
BAYTOWN OLEFINS PLANT	EXXON MOBIL CHEMICAL COMPANY	TX	04/05/2001	FURNACE HF-01	238	MMBtu/hr	NONE INDICATED	0.0013 lb/mmbtu	0.3 LB/H
LYONDELL - CITGO REFINING, LP	LYONDELL - CITGO REFINING, LP	TX	03/14/2002	BOILER NO. 13	366.83	MMBtu/hr		0.0054 lb/mmbtu	1.98 LB/H
LYONDELL - CITGO REFINING, LP	LYONDELL - CITGO REFINING, LP	TX	03/14/2002	BOILERS 14 AND 15	586	MMBtu/hr	NONE INDICATED	0.0054 lb/mmbtu	3.16 LB/H
LYONDELL - CITGO REFINING, LP	LYONDELL - CITGO REFINING, LP	TX	03/14/2002	BTU- NO.3 REACTOR FEED HEATER	58.95	MMBtu/hr	NONE INDICATED	0.0054 lb/mmbtu	0.32 LB/H
LYONDELL - CITGO REFINING, LP	LYONDELL - CITGO REFINING, LP	TX	03/14/2002	BTU-NO.4 REACTOR FEED HEATER	49	MMBtu/hr	NONE INDICATED	0.0053 lb/mmbtu	0.26 LB/H
LYONDELL - CITGO REFINING, LP	LYONDELL - CITGO REFINING, LP	TX	03/14/2002	BTU-REFORMATE STABILIZER REBOILER	54.77	MMBtu/hr	NONE INDICATED	0.0055 lb/mmbtu	0.3 LB/H
LYONDELL - CITGO REFINING, LP	LYONDELL - CITGO REFINING, LP	TX	03/14/2002	ISOM II WEST REACTOR FEED HEATER	104.25	MMBtu/hr	NONE INDICATED	0.0054 lb/mmbtu	0.56 LB/H
LYONDELL - CITGO REFINING, LP	LYONDELL - CITGO REFINING, LP	TX	03/14/2002	ISOM II COMBINATION SPLITTER HEATER	77.62	MMBtu/hr	NONE INDICATED	0.0054 lb/mmbtu	0.42 LB/H
LYONDELL - CITGO REFINING, LP	LYONDELL - CITGO REFINING, LP	TX	03/14/2002	ISOM II XYLENE RERUN TOWER HEATER	83.7	MMBtu/hr	NONE INDICATED	0.0054 lb/mmbtu	0.45 LB/H
LYONDELL - CITGO REFINING, LP	LYONDELL - CITGO REFINING, LP	TX	03/14/2002	ISOM II EAST REACTOR FEED HEATER	75	MMBtu/hr	NONE INDICATED	0.0053 lb/mmbtu	0.4 LB/H
LYONDELL - CITGO REFINING, LP	LYONDELL - CITGO REFINING, LP	TX	03/14/2002	ORTHOXYLENE I HEATER	96.23	MMBtu/hr	NONE INDICATED	0.0054 lb/mmbtu	0.52 LB/H
LYONDELL - CITGO REFINING, LP	LYONDELL - CITGO REFINING, LP	TX	03/14/2002	ORTHOXYLENE II HEATER	226.42	MMBtu/hr	NONE INDICATED	0.0054 lb/mmbtu	1.22 LB/H

Table C-3 Results of RBLC Search for Heaters (VOC) 12/15/2011

Facility Name	Company Name	State	Date	Process Name	Throughput		Control Method	Emission Limit	
LYONDELL - CITGO REFINING, LP	LYONDELL - CITGO REFINING, LP	TX	03/14/2002	BTU-NO. 1 REACTOR FEED HEATER	121.74	MMBtu/hr	NONE INDICATED	0.0054 lb/mmbtu	0.66 LB/H
LYONDELL - CITGO REFINING, LP	LYONDELL - CITGO REFINING, LP	TX	03/14/2002	BTU-NO.2 REACTOR FEED HEATER	69.68	MMBtu/hr	NONE INDICATED	0.0055 lb/mmbtu	0.38 LB/H
LYONDELL - CITGO REFINING, LP	LYONDELL - CITGO REFINING, LP	TX	03/14/2002	BENZENE STABILIZER HEATER	38.34	MMBtu/hr	NONE INDICATED	0.0055 lb/mmbtu	0.21 LB/H
LYONDELL - CITGO REFINING, LP	LYONDELL - CITGO REFINING, LP	TX	03/14/2002	BOILER NO. 12	245	MMBtu/hr	NONE INDICATED	0.0054 lb/mmbtu	1.32 LB/H
FORMOSA POINT COMFORT PLANT	FORMOSA PLASTICS CORPORATION TEXAS	TX	05/09/2005	PYROLYSIS FURNACE (1010B)	250	MMBtu/hr		0.0092 lb/mmbtu	2.31 LB/H
FORMOSA POINT COMFORT PLANT	FORMOSA PLASTICS CORPORATION TEXAS	TX	05/09/2005	PYROLYSIS FURNACES (1001-1008, 1009 B)	250	MMBtu/hr		0.0028 lb/mmbtu	0.7 LB/H
FORMOSA POINT COMFORT PLANT	FORMOSA PLASTICS CORPORATION TEXAS	TX	05/09/2005	REBOILER (1 AND 2)	250	MMBtu/hr		0.0003 lb/mmbtu	0.08 LB/H
FORMOSA POINT COMFORT PLANT	FORMOSA PLASTICS CORPORATION TEXAS	TX	05/09/2005	PYROLYSIS FURNACE (1054-1056)	250	MMBtu/hr		0.0109 lb/mmbtu	2.73 LB/H
FORMOSA POINT COMFORT PLANT	FORMOSA PLASTICS CORPORATION TEXAS	TX	05/09/2005	PYROLYSIS FURNACE (1057-1062, 1091)	250	MMBtu/hr		0.0028 lb/mmbtu	0.71 LB/H
FORMOSA POINT COMFORT PLANT	FORMOSA PLASTICS CORPORATION TEXAS	TX	05/09/2005	PYROLYSIS FURNACE (N1011-1012)	250	MMBtu/hr		0.0092 lb/mmbtu	2.31 LB/H
FORMOSA POINT COMFORT PLANT	FORMOSA PLASTICS CORPORATION TEXAS	TX	05/09/2005	REGENERATION HEATER					0.03 LB/H
FORMOSA POINT COMFORT PLANT	FORMOSA PLASTICS CORPORATION TEXAS	TX	05/09/2005	SECOND STAGE FEED HEATER					0.02 LB/H
CITGO CORPUS CHRISTI REFINERY - WEST PLANT	CITGO REFINING AND CHEMICALS COMAPNY LP	TX	04/20/2005	DHT STRIPPER REBOILER					0.47 LB/H
CITGO CORPUS CHRISTI REFINERY - WEST PLANT	CITGO REFINING AND CHEMICALS COMAPNY LP	TX	04/20/2005	COKER HEATER	291	MMBtu/hr		0.0055 lb/mmbtu	1.6 LB/H
CITGO CORPUS CHRISTI REFINERY - WEST PLANT	CITGO REFINING AND CHEMICALS COMAPNY LP	TX	04/20/2005	MIXED DISTILLATE HYDROHEATER	62	MMBtu/hr		0.0053 lb/mmbtu	0.33 LB/H
CITGO CORPUS CHRISTI REFINERY - WEST PLANT	CITGO REFINING AND CHEMICALS COMAPNY LP	TX	04/20/2005	NO.3 BOILER	99	MMBtu/hr		0.0051 lb/mmbtu	0.5 LB/H
CITGO CORPUS CHRISTI REFINERY - WEST PLANT	CITGO REFINING AND CHEMICALS COMAPNY LP	TX	04/20/2005	MIXED DISTILLATE HYDROHEATER REBOILER HEATER	82	MMBtu/hr		0.0054 lb/mmbtu	0.44 LB/H
CITGO CORPUS CHRISTI REFINERY - WEST PLANT	CITGO REFINING AND CHEMICALS COMAPNY LP	TX	04/20/2005	DHT CHARGER HEATER					0.51 LB/H
VIRTEX PETROLEUM COMPANY DOERING RANCH GAS PLANT	VIRTEX PETROLEUM INC.	TX	05/05/2005	1.8 MMBTU AMINE REBOILER	1.8	MMBtu/hr		0.0056 lb/mmbtu	0.01 LB/H
VIRTEX PETROLEUM COMPANY DOERING RANCH GAS PLANT	VIRTEX PETROLEUM INC.	TX	05/05/2005	1.0 MMBTU DEHY REBOILER	1	MMBtu/hr		0.0100 lb/mmbtu	0.01 LB/H
GARYVILLE REFINERY	MARATHON PETROLEUM CO LLC	LA	12/27/2006	NAPHTHA HYDROTREATER REACTOR CHARGE HEATER (5-08), KHT REACTOR CHARGE HEATER (9-08), & HCU TRAIN 1&2 REACTOR CHARGE HEATERS (11-08 & 12-08)			Good Combustion Practice & Design	0.0015 lb/mmbtu	
GARYVILLE REFINERY	MARATHON PETROLEUM CO LLC	LA	12/27/2006	NAPHTHA HYDROTREATER STRIPPER REBOILER HEATER (6-08) & KHT STRIPPER REBOILER HEATER (10-08)			Good Combustion Practice & Design	0.0015 lb/mmbtu	
GARYVILLE REFINERY	MARATHON PETROLEUM CO LLC	LA	12/27/2006	BOILER NO. 1 (16-08)	525.7	MMBtu/hr	Good Combustion Practice & Design	0.0015 lb/mmbtu	
GARYVILLE REFINERY	MARATHON PETROLEUM CO LLC	LA	12/27/2006	A & B CRUDE HEATERS (1-08 & 2-08) & COKER CHARGE HEATER (15-08)			Good Combustion Practice & Design	0.0015 lb/mmbtu	
GARYVILLE REFINERY	MARATHON PETROLEUM CO LLC	LA	12/27/2006	PLATFORMER HEATER CELLS NO. 1-3 (7A-08, 7B-08, & 7C-08) & HCU FRACTIONATOR HEATER (13-08)			Good Combustion Practice & Design	0.0015 lb/mmbtu	
GARYVILLE REFINERY	MARATHON PETROLEUM CO LLC	LA	12/27/2006	A & B VACUUM TOWER HEATERS (3-08 & 4-08)	155.2	MMBtu/hr	Good Combustion Practice & Design	0.0015 lb/mmbtu	

Table C-3 Results of RBLC Search for Heaters (VOC) 12/15/2011

Facility Name	Company Name	State	Date	Process Name	Throughput		Control Method	Emission Limit	
ST. CHARLES REFINERY	VALERO REFINING - NEW ORLEANS, LLC	LA	11/17/2009	CPF HEATER H-39-03 & H-39-02 (94-28 & 94-30)			Good Combustion Practice & Design	0.0054	lb/mmbtu
ST. CHARLES REFINERY	VALERO REFINING - NEW ORLEANS, LLC	LA	11/17/2009	HEATERS/REBOILERS			Good Combustion Practice & Design	0	
ST. CHARLES REFINERY	VALERO REFINING - NEW ORLEANS, LLC	LA	11/17/2009	HEATERS (2008-1 - 2008-9)			COMPLY WITH 40 CFR 60 SUBPARTS NNN AND RRR	0	
ST. CHARLES REFINERY	VALERO REFINING - NEW ORLEANS, LLC	LA	11/17/2009	HEATERS (94-21 & 94-29)			Good Combustion Practice & Design	0	
ST. CHARLES REFINERY	VALERO REFINING - NEW ORLEANS, LLC	LA	11/17/2009	DHT HEATERS (4-81, 5-81)	70	MMBtu/hr	Good Combustion Practice & Design	0	

Table C-4 Results of RBLC Search for Cooling Towers (PM) 12/15/2011

Facility Name	Company Name	State	Date	Process Name	Throughput	Control Method	Emission Limit
LION OIL COMPANY	LION OIL COMPANY	AR	10/01/2007	#9 COOLING TOWER, SN-853-9	10.5 Billion gal per 12 mo.	DRIFT ELIMINATORS, 0.005%	3000 MG/L TDS
ARIZONA CLEAN FUELS YUMA	ARIZONA CLEAN FUELS YUMA LLC	AZ	04/14/2005	COOLING TOWER		HIGH EFFICIENCY DRIFT ELIMINATORS	1.6 LB/H
NORTH AMERICAN POWER GP -KIOWA CREEK	NORTH AMERICAN POWER GP - KIOWA CREEK	CO	01/17/2001	EVAPORATIVE WATER COOLING TOWERS (2)		DRIFT ELIMINATORS. PRIMARY LIMIT: LB/MMGAL H2O CIRCULATED, ALTERNATE LIMIT: T/YR FOR EACH TOWER.	0.18 LB/MMGAL
COMANCHE STATION	PUBLIC SERVICE COMPANY OF COLORADO	CO	07/05/2005	COOLING TOWER	140650 GPM	DRIFT ELIMINATORS TO ACHIEVE 0.0005 % DRIFT OR LESS.	0
CRYSTAL RIVER POWER PLANT	PROGRESS ENERGY FLORIDA	FL	04/04/2006	PORTABLE COOLING TOWER	180000 GPM	DRIFT ELIMINATORS	0.0015 % DRIFT
ANCLOTE POWER PLANT	PROGRESS ENERGY FLORIDA	FL	12/22/2006	COOLING TOWERS	660000 GPM	DRIFT ELIMINATORS	108 T/YR
CRYSTAL RIVER POWER PLANT	PROGRESS ENERGY FLORIDA, INC	FL	10/12/2007	COOLING TOWERS	342306 GPM		0.0005 % DRIFT
FPL WEST COUNTY ENERGY CENTER UNIT 3	FLORIDA POWER AND LIGHT COMPANY (FP&L)	FL	07/30/2008	MECHANICAL DRAFT COOLING TOWER		DRIFT RATE OF <or = 0.0005% OF THE CIRCULATING WATER FLOW RATE.	0.0005 %
STATION	(IPL)	IA	12/20/2002	COOLING TOWER	140000 GPM	ELIMINATORS	1.224 LB/H
WALTER SCOTT JR. ENERGY CENTER	MIDAMERICAN ENERGY COMPANY	IA	06/17/2003	COOLING TOWER	349400 GPM	MIST ELIMINATORS	1050 MG/L
HOMELAND ENERGY SOLUTIONS, LLC, PN 06-672	HOMELAND ENERGY SOLUTIONS, LLC, PN 06-672	IA	08/08/2007	COOLING TOWER, F80 (07-A-979P)	50000 GPM	DRIFT ELIMINATOR / DEMISTER	0.0005 % DRIFT
TATE & LYLE INDGREDIENTS AMERICAS, INC.		IA	09/19/2008	COOLING TOWER		DRIFT ELIMINATORS	0.0005 %
POWER COUNTY ADVANCED ENERGY CENTER	SOUTHEAST IDAHO ENERGY, LLC	ID	02/10/2009	COOLING TOWER, SRC22	121000 GPM	DRIFT/MIST ELIMINATORS	0.0005 % DRIFT
POWER COUNTY ADVANCED ENERGY CENTER	SOUTHEAST IDAHO ENERGY, LLC	ID	02/10/2009	ZLDS COOLING TOWER, SRC30	985 GPM	DRIFT/MIST ELIMINATORS	0.001 % DRIFT
LANGLEY GULCH POWER PLANT	IDAHO POWER COMPANY	ID	06/25/2010	COOLING TOWER	63200 GPM	DRIFT ELIMINATORS, GOOD OPERATING PRACTICES	0
AVENTINE RENEWABLE ENERGY, INC.	AVENTINE RENEWABLE ENERGY, INC.	IL	11/01/2005	COOLING TOWER	GPM	DRIFT ELIMINATOR	0.005 % DRIFT

Table C-4 Results of RBLC Search for Cooling Towers (PM) 12/15/2011

Facility Name	Company Name	State	Date	Process Name	Throughput	Control Method	Emission Limit
AUBURN NUGGET	AUBURN NUGGET	IN	05/31/2005	COOLING TOWER	23450 GPM		0.005 % DRIFT
BATON ROUGE REFINERY	EXXONMOBIL REFINING AND SUPPLY COMPANY	LA	04/26/2002	COOLING TOWER		DRIFT ELIMINATOR (MECHANICAL DRAFT DESIGN).	0.77 LB/H
DICKERSON	MIRANT MID-ATLANTIC, LLC	MD	11/05/2004	COOLING TOWER	10 CELLS	MIST ELIMINATORS	0.001 %
CPV ST CHARLES	COMPETITIVE POWER VENTURES, INC./CPV MARYLAND, LLC	MD	11/12/2008	COOLING TOWER			0
MINNESOTA STEEL INDUSTRIES, LLC		MN	09/07/2007	COOLING TOWER		DESIGNED TO MINIMIZE DRIFT	% DRIFT 0.005 RATE
FORSYTH ENERGY PLANT	FORSYTH ENERGY PROJECTS, LLC	NC	09/29/2005	COOLING TOWER	3834 GPM		0.007 LB/H
NUCOR STEEL	NUCOR STEEL	NC	11/23/2004	COOLING TOWERS		MIST ELIMINATORS WITH A 0.008 PERCENT DRIFT LOSS	0.008 %
ABENGOA BIOENERY CORPORATION - YORK	ABENGOA BIOENERGY CORPORATION	NE	01/21/2004	COOLING TOWER			0.005 %
AVENTINE RENEWABLE ENERGY - AURORA WEST LLC	AVENTINE RENEWABLE ENERGY - AURORA WEST, LLC	NE	09/27/2007	COOLING TOWER		MIST ELIMINATOR	0.0005 %
DUKE ENERGY WASHINGTON COUNTY LLC	DUKE ENERGY NORTH AMERICA	OH	08/14/2003	COOLING TOWER			2.08 LB/H
LIMA CHEMICALS COMPLEX	BRITISH PETROLEUM CHEMICALS, INC.	OH	07/10/2003	COOLING TOWER	MM 175 LB/YR	DRIFT ELIMINATORS + LDAR PROGRAM	1.4 LB/H
JACKSON COUNTY POWER, LLC	JACKSON COUNTY POWER, LLC	OH	12/27/2001	COOLING TOWERS (4)			3.43 LB/H
ASA BLOOMINGBURG, LLC	ASALLIANCE BIOFUELS, LLC	OH	08/10/2006	COOLING TOWER	3300000 GAL/H	PARAMETRIC MONITORING OF THE DRIFT ELIMINATOR.	2.64 LB/H
NEW STEEL INTERNATIONAL, INC., HAVERHILL	NEW STEEL INTERNATIONAL, INC.	OH	05/06/2008	COOLING TOWERS (12)	1440000 GAL/H	DRIFT ELIMINATORS	3.42 LB/H
WANAPA ENERGY CENTER	DIAMOND WANAPA I, L.P.	OR	08/08/2005	COOLING TOWER	6.2 CF/SEC	I0.0005% DRIFT ELIMINATORS. LIMIT TDS IN TO < 3,532 PPMW.	3532 PPMW
COGENERATION PLANT (AES-PRCP)	AES PUERTO RICO	PR	10/29/2001	COOLING TOWER	250000 GPM	PROVIDE SURFACE AREA UPON WHICH WATER DROPLETS	15 LB/H
SANTEE COOPER CROSS GENERATING STATION	SANTEE COOPER	SC	02/05/2004	COOLING TOWERS (2)			1.86 LB/H
ALCOA ALUMINUM SHEET, PLATE & FOIL	ALCOA FOIL PRODUCTS	TX	09/28/2001	COOLING TOWER		NONE INDICATED	1.1 LB/H

Table C-4 Results of RBLC Search for Cooling Towers (PM) 12/15/2011

Facility Name	Company Name	State	Date	Process Name	Throughput	Control Method	Emission Limit
WEATHERFORD ELECTRIC GENERATION FACILITY	SEI TEXAS LLC	TX	03/11/2002	COOLING TOWER, C-1		NONE INDICATED	1.45 LB/H
ALCOA SAN ANTONIO WORKS	ALCOA INC	TX	04/08/2004	COOLING TOWER (4)			1.68 LB/H
ROHM AND HAAS CHEMICALS LLC LONE STAR PLANT	ROHM AND HAAS TEXAS INCORPORATION	TX	03/24/2005	N-5 COOLING TOWER NORTH		DRIFT ELIMINATORS	2.04 LB/H
ROHM AND HAAS CHEMICALS LLC LONE STAR PLANT	ROHM AND HAAS TEXAS INCORPORATION	TX	03/24/2005	N-5 COOLING TOWER SOUTH		DRIFT ELIMINATORS	2.84 LB/H
ROHM AND HAAS CHEMICALS LLC LONE STAR PLANT	ROHM AND HAAS TEXAS INCORPORATION	TX	03/24/2005	N-7 COOLING TOWER		DRIFT ELIMINATORS	7.65 LB/H
WALLULA POWER PLANT	WALLULA GENERATION, LLC	WA	01/03/2003	COOLING TOWER		WATER PRETREATMENT PLUS A 0.0005% DRIFT RATE	3.7 LB/H
BP CHERRY POINT COGENERATION PROJECT	BP WEST COAST PRODUCTS, LLC	WA	01/11/2005	COOLING TOWER		DRIFT LOSS OF LESS THAN 0.001% OF THE RECIRCULATING WATER FLOW RATE.	0
DARRINGTON ENERGY COGENERATION POWER PLANT	DARRINGTON ENERGY LLC	WA	02/11/2005	COOLING TOWER		DRIFT LOSS OF LESS THAN 0.001% OF THE RECIRCULATING WATER FLOW RATE.	0
ETHANOL PLANT	PRODUCERS	WI	08/14/2003	COOLING TOWERS, P80	22000 GPM	PPM SOLIDS; MAX	1.1 LB/H
ACE ETHANOL - STANLEY	ACE ETHANOL, LLC	WI	01/21/2004	COOLING TOWERS, F06	GPM	MIST ELIMINATORS	0.65 LB/H
INC. - SUPERIOR	SPECIALTY MINERALS INC. (SMI)	WI	07/22/2011	P40, P50 - COOLING TOWERS	700 GPM	ELIMINATORS (W/ ADDITIONAL	0.0005 % DRIFT
INC. - SUPERIOR	SPECIALTY MINERALS INC. (SMI)	WI	07/22/2011	P60 - COOLING TOWER	200 GPM	ELIMINATORS (W/ ADDITIONAL	0.0005 % DRIFT
MAIDSVILLE	LONGVIEW POWER, LLC	WV	03/02/2004	COOLING TOWER		REDUNDANT BAFFLE AND MESH DEMISTER SYSTEM	0.9 LB/H
WESTERN GREENBRIER CO-GENERATION, LLC	WESTERN GREENBRIER CO-GENERATION, LLC	WV	04/26/2006	COOLING TOWER	55000 GPM	DRIFT ELIMINATORS @ 0.0005% DRIFT RATE	0.79 LB/H
TUSCALOOSA REFINERY	HUNT REFINING COMPANY	AL	05/20/2008	COOLING TOWER		USE DRIFT ELIMINATORS AS OUTLINED IN THE RBLC.	0
THOMAS B. FITZHUGH GENERATING STATION	ARKANSAS ELECTRIC CO-OP	AR	02/15/2002	COOLING TOWER		DRIFT ELIMINATORS	0.4 LB/H
TENASKA ARKANSAS PARTNERS, LP	TENASKA ARKANSAS PARTNERS, LP	AR	10/09/2001	COOLING TOWERS	MM 16.7 GAL/H	DRIFT ELIMINATORS.	LB/MMGAL 0.13
GENOVA ARKANSAS I, LLC	GENOVA ARKANSAS I, LLC	AR	08/23/2002	COOLING TOWER	MM 11.4 GAL/H	DRIFT ELIMINATORS	% DRIFT LOSS 0.001

Table C-4 Results of RBLC Search for Cooling Towers (PM) 12/15/2011

Facility Name	Company Name	State	Date	Process Name	Throughput	Control Method	Emission Limit
PLUM POINT ENERGY	PLUM POINT ASSOCIATES, LLC	AR	08/20/2003	COOLING TOWER , SN-03		MIST ELIMINATORS	0.8 LB/H
BLUEWATER PROJECT	STEELCORR, INC.	AR	07/22/2004	COOLING TOWERS		DRIFT/MIST ELIMINATORS	6 LB/H
NUCOR STEEL, ARKANSAS	NUCOR CORPORATION	AR	06/09/2003	COOLING TOWER			3.6 T/YR
PLUM POINT ENERGY	PLUM POINT ASSOCIATES, LLC	AR	08/20/2003	COOLING TOWER - SN-03		MIST ELIMINATORS	0.8 LB/H
POWER PLANT	COMPANY	AR	11/05/2008	COOLING TOWER		DRIFT RATE	5.2 LB/H
WELLTON MOHAWK GENERATING STATION	DOME VALLEY ENERGY PARTNERS	AZ	12/01/2004	MECHANICAL DRAFT COOLING TOWERS	170000 GPM	DRIFT ELIMINATORS W/ DRIFT RATE OF 0.0005 PERCENT OF CIRCULATING WATER FLOW)	3 LB/H
LA PAZ GENERATING FACILITY	ALLEGHENY ENERGY SUPPLY LLC	AZ	09/04/2003	MECHANICAL DRAFT COOLING TOWERS	173870 GPM	DRIFT ELIMINATORS	0.0005 % BY VOL
LA PAZ GENERATING FACILITY	ALLEGHENY ENERGY SUPPLY LLC	AZ	09/04/2003	MECHANICAL DRAFT COOLING TOWERS	141400 GPM	DRIFT ELIMINATORS	0.0005 % BY VOL
ROCKY MOUNTAIN ENERGY CENTER, LLC.	ROCKY MOUNTAIN ENERGY CENTER, LLC.	CO	08/11/2002	EVAPORATIVE WATER COOLING TOWER		HIGH EFFICIENCY DRIFT ELIMINATOR	0.42 LB/MM GAL
COMANCHE STATION	PUBLIC SERVICE COMPANY OF COLORADO	CO	07/05/2005	COOLING TOWER	140650 GPM	DRIFT ELIMINATORS TO ACHIEVE 0.0005% DRIFT OR LESS	0
HILLSBOROUGH COUNTY RESOURCE RECOVERY FACILITY	DEPARTMENT OF SOLID WASTE MANAGEMENT	FL	11/03/2006	COOLING TOWER		DRIFT ELIMINATORS	0.001 % DRIFT RATE
OSCEOLA STEEL CO.	OSCEOLA STEEL CO.	GA	12/29/2010	Cooling Towers, CT1, CT21, CT22, and CT23	0	Drift Eliminators	0.0005 %Drift
EMERY GENERATING STATION	INTERSTATE POWER & LIGHT (IPL)	IA	12/20/2002	COOLING TOWER	140000 GPM	HIGH EFFICIENCY DRIFT ELIMINATORS	1.224 LB/H
WALTER SCOTT JR. ENERGY CENTER	MIDAMERICAN ENERGY COMPANY	IA	06/17/2003	COOLING TOWER	349400 GPM	MIST ELIMINATOR	1050 MG/L
GOLDEN GRAIN ENERGY	GOLDEN GRAIN ENERGY	IA	04/19/2006	COOLING TOWER		MIST ELIMINATOR	1.33 LB/H
ADM CORN PROCESSING - CEDAR RAPIDS	ARCHER DANIELS MIDLAND	IA	06/29/2007	INDUSTRIAL COOLING TOWER	150000 GPM	DRIFT ELIMINATORS	0.0005 %Drift
HOMELAND ENERGY SOLUTIONS, LLC, PN 06-672	HOMELAND ENERGY SOLUTIONS, LLC, PN 06-672	IA	08/08/2007	COOLING TOWER, F80 (07-A-979P)	50000 GPM	DRIFT ELIMINATOR / DEMISTER	0.0005 %Drift
SOUTHWEST IOWA RENEWABLE ENERGY	SOUTHWEST IOWA RENEWABLE ENERGY	IA	04/19/2007	COOLING TOWERS	3000000 GAL/H	MIST ELIMINATOR 0.005%	3.12 LB/H

Table C-4 Results of RBLC Search for Cooling Towers (PM) 12/15/2011

Facility Name	Company Name	State	Date	Process Name	Throughput	Control Method	Emission Limit
TATE & LYLE INDGREDIENTS AMERICAS, INC.		IA	09/19/2008	COOLING TOWER		DRIFT ELIMINATORS	0.0005 %
POWER COUNTY ADVANCED ENERGY CENTER	SOUTHEAST IDAHO ENERGY, LLC	ID	02/10/2009	COOLING TOWER, SRC22	121000 GPM	DRIFT/MIST ELIMINATORS	0.0005 %Drift
POWER COUNTY ADVANCED ENERGY CENTER	SOUTHEAST IDAHO ENERGY, LLC	ID	02/10/2009	ZLDS COOLING TOWER, SRC30	985 GPM	DRIFT/MIST ELIMINATORS	0.001 %Drift
NUCOR STEEL	NUCOR STEEL	IN	01/19/2001	COOLING TOWER SYSTEM	12000 GPM	LIMIT IS DRIFT ELIMINATOR. NO NUMERICAL LIMIT	0
COGENTRIX LAWRENCE CO., LLC	COGENTRIX LAWRENCE CO., LLC	IN	10/05/2001	COOLING TOWERS		GOOD OPERATING PRACTICES, AND DRIFT ELIMINATORS	3.43 LB/H
MIRANT SUGAR CREEK LLC	MIRANT SUGAR CREEK LLC	IN	07/24/2002	COOLING TOWERS, (2)		GOOD DESIGN AND OPERATION PRATICES	1.41 LB/H
BATON ROUGE REFINERY	EXXONMOBIL REFINING AND SUPPLY COMPANY	LA	04/26/2002	COOLING TOWER		DRIFT ELIMINATOR (MECHANICAL DRAFT DESIGN).	0.77 LB/H
PLAQUEMINE COGENERATION FACILITY	THE DOW CHEMICAL COMPANY	LA	07/23/2008	COOLING TOWER	0.01 % DRIFT	GOOD OPERATING PRACTICES	1.4 LB/H
ACTIVATED CARBON FACILITY	RED RIVER ENVIRONMENTAL PRODUCTS LLC	LA	05/28/2008	COOLING TOWERS	10750 GPM	DRIFT ELIMINATION SYSTEM	0.41 LB/H
CARVILLE ENERGY CENTER	CARVILLE ENERGY LLC	LA	05/16/2001	COOLING TOWER	116580 GPM	DRIFT ELIMINATOR AND GOOD OPERATING PRACTICES.	1.19 LB/H
PERRYVILLE POWER STATION	PERRYVILLE ENERGY PARTNERS, LLC	LA	03/08/2002	COOLING TOWER		DRIFT ELIMINATORS	3.3 LB/H
MICHOUD ELECTRIC GENERATING PLANT	ENTERGY NEW ORLEANS, INC.	LA	10/12/2004	COOLING TOWERS (2)	1728 GPM	DRIFT ELIMINATORS AND GOOD OPERATING PRACTICES	0.052 LB/H
CRESCENT CITY POWER	CRESENT CITY POWER, LLC	LA	06/06/2005	MAIN COOLING TOWER	290200 GPM	MARLEY EXCEL DRIFT ELIMINATORS	2.61 LB/H
PLAQUEMINE PVC PLANT	SHINTECH LOUISIANA LLC	LA	02/27/2009	C/A COOLING TOWER (C-4)	38750 GPM	AND INTEGRATED DRIFT	0.08 GAL
PLAQUEMINE PVC PLANT	SHINTECH LOUISIANA LLC	LA	02/27/2009	VCM COOLING TOWER (M-7)	106000 GPM	AND INTEGRATED DRIFT	0.06 GAL
PLAQUEMINE PVC PLANT	SHINTECH LOUISIANA LLC	LA	02/27/2009	COOLING TOWER (P-15)	43000 GPM	AND INTEGRATED DRIFT	0.057 GAL
BATON ROUGE REFINERY	EXXONMOBIL REFINING & SUPPLY CO	LA	02/18/2004	COOLING TOWERS		DRIFT ELIMINATOR SYSTEM	0.003 % DRIFT
GARYVILLE REFINERY	MARATHON PETROLEUM CO LLC	LA	12/27/2006	COOLING TOWER NOS. 1; 2		HIGH EFFICIENCY DRIFT ELIMINATORS	0.005 PERCENT

Table C-4 Results of RBLC Search for Cooling Towers (PM) 12/15/2011

Facility Name	Company Name	State	Date	Process Name	Throughput	Control Method	Emission Limit
LITTLE GYPSY GENERATING PLANT	ENTERGY LOUISIANA LLC	LA	11/30/2007	COOLING TOWER	5000 GPM	DRIFT ELIMINATOR WITH A 99.999% CONTROL EFFICIENCY	0.05 LB/H
ARSENAL HILL POWER PLANT	SOUTHWEST ELECTRIC POWER COMPANY (SWEPCO)	LA	03/20/2008	COOLING TOWER	140000 GPM	USE OF MIST ELIMINATORS	1.4 LB/H
DIRECT REDUCTION IRON PLANT	CONSOLIDATED ENVIRONMENTAL MANAGEMENT INC - NUCOR	LA	01/27/2011	Process Water Cooling Tower	26857 GPM	1,000 ppm TDS and drift eliminators with maximum of 0.0005%.	0.11 LB/H
DIRECT REDUCTION IRON PLANT	CONSOLIDATED ENVIRONMENTAL MANAGEMENT INC - NUCOR	LA	01/27/2011	Process Water Cooling Tower	26857 GPM	1,000 ppm TDS and drift eliminators with maximum of 0.0005%.	0.11 LB/H
DIRECT REDUCTION IRON PLANT	CONSOLIDATED ENVIRONMENTAL MANAGEMENT INC - NUCOR	LA	01/27/2011	Clean Water Cooling Tower	17611 GPM	1,000 ppm TDS and drift eliminators with maximum of 0.0005%.	0.07 LB/H
DIRECT REDUCTION IRON PLANT	CONSOLIDATED ENVIRONMENTAL MANAGEMENT INC - NUCOR	LA	01/27/2011	Clean Water Cooling Tower	17611 GPM	1,000 ppm TDS and drift eliminators with maximum of 0.0005%.	0.07 LB/H
FLOPAM INC. FACILITY	FLOPAM INC.	LA	04/26/2011	cooling towers (10 units)	3640 GPM	No additional control	0.01 LB/H
BRAYTON POINT STATION	POINT, LLC	MA	04/12/2009	TOWERS (2)	400000 GPM	DRIFT ELIMINATORS	1066 LB/H
KELSON RIDGE	FREE STATE ELECTRIC, LLC	MD	09/27/2001	COOLING TOWERS		MIST ELIMINATORS	0
CPV ST CHARLES	COMPETITIVE POWER VENTURES, INC./CPV MARYLAND, LLC	MD	11/12/2008	COOLING TOWER			0
MINNESOTA STEEL INDUSTRIES, LLC		MN	09/07/2007	COOLING TOWER		DESIGNED TO MINIMIZE DRIFT	0.005 % DRIFT
MUELLER CASTING COMPANY, INC.	MUELLER CASTING COMPANY, INC.	MS	09/28/2001	NORTH COOLING TOWER		MIST ELIMINATORS.	90 % RED
MUELLER CASTING COMPANY, INC.	MUELLER CASTING COMPANY, INC.	MS	09/28/2001	SOUTH COOLING TOWER		MIST ELIMINATORS.	90 % RED.
MUELLER CASTING COMPANY, INC.	MUELLER CASTING COMPANY, INC.	MS	09/28/2001	MID COOLING TOWER		MIST ELIMINATORS.	90 % RED.
CP&L ROWAN CO TURBINE FACILITY	CAROLINA POWER AND LIGHT	NC	03/14/2001	COOLING TOWER	123220 GPM	DRIFT ELIMINATORS	6 T/YR
GENPOWER EARLEYS, LLC	GENPOWER EARLEYS, LLC	NC	01/09/2002	COOLING TOWERS, ES6 - EWS-19	150000 GPM	MIST ELIMINATORS	2.01 LB/H
FORSYTH ENERGY PLANT	FORSYTH ENERGY PROJECTS, LLC	NC	09/29/2005	COOLING TOWER	3834 GPM		0.002 LB/H
OPPD - NEBRASKA CITY STATION	OMAHA PUBLIC POWER DISTRICT	NE	03/09/2005	COOLING TOWER			0.001 LB/H
LIBERTY GENERATING STATION	LIBERTY GENERATING STATION	NJ	03/28/2002	COOLING TOWER (3)-MECHANICAL DRAFT		NONE	7.93 T/YR

Table C-4 Results of RBLC Search for Cooling Towers (PM) 12/15/2011

Facility Name	Company Name	State	Date	Process Name	Throughput	Control Method	Emission Limit
CLOVIS ENERGY FACILITY	DUKE ENERGY CURRY LLC	NM	06/27/2002	COOLING TOWER (CT-1 AND CT-2)	130000 GPM	DRIFT ELIMINATORS	0.7 LB/H
TS POWER PLANT	NEWMONT NEVADA ENERGY INVESTMENT, LLC	NV	05/05/2005	COOLING TOWER		DRIFT ELIMINATORS	0.0005 PERCENT DRIFT
NELLIS AIR FORCE BASE	99 CIVIL ENGINEER SQUADRON OF USAF	NV	02/26/2008	COOLING TOWERS		TDS WATER TO 0.03 LBS/GAL, LIMIT OF THROUGHPUT TO 1,200 GAL/MIN, AND DRIFT % 0.005	0.051 LB/H
HARRAH'S OPERATING COMPANY, INC.	HARRAH'S OPERATING COMPANY, INC.	NV	08/20/2009	COOLING TOWER - UNIT HA19	7200 GPM	CONTROLS DRIFT RATE TO 0.005%, AND MAXIMUM TDS OF 2,520 PPM.	0.215 LB/H
HARRAH'S OPERATING COMPANY, INC.	HARRAH'S OPERATING COMPANY, INC.	NV	08/20/2009	COOLING TOWER - UNIT FL17	6900 GPM	DRIFT ELIMINATOR TO < 0.005% AND TDS BELOW 3,000 PPM.	0.425 LB/H
HARRAH'S OPERATING COMPANY, INC.	HARRAH'S OPERATING COMPANY, INC.	NV	08/20/2009	COOLING TOWER - UNIT BA14	20400 GPM	BACT CONSISTS OF THE TWO REQUIREMENTS DESCRIBED IN THE PROCESS.	0.744 LB/H
MGM MIRAGE	MGM MIRAGE	NV	11/30/2009	COOLING TOWERS	10890 GPM	DRIFT ELIMINATOR RATE TO 0.001% AND THE TDS LIMITED TO 3,600 PPM.	0.091 LB/H
TRIGEN-NASSAU ENERGY CORPORATION	TRIGEN-NASSAU ENERGY CORPORATION	NY	03/31/2005	COOLING TOWER			0.0005 % DRIFT
DUKE ENERGY HANGING ROCK ENERGY FACILITY	DUKE ENERGY HANGING ROCK, LLC	OH	12/28/2004	COOLING TOWER, MECHANICAL DRAFT		DRIFT ELIMINATORS	2.6 LB/H
FREMONT ENERGY CENTER, LLC	CALPINE CORPORATION	OH	08/09/2001	COOLING TOWER, MECHANICAL DRAFT		HIGH EFFICIENCY DRIFT ELIMINATORS	1.5 LB/H
NORTON ENERGY STORAGE, LLC	NORTON ENERGY	OH	05/23/2002	COOLING TOWERS MECHANICAL INDUCED DRAFT			5.62 LB/H
LIMA ENERGY COMPANY	Global Energy, Inc.	OH	03/26/2002	COOLING TOWER		IMPLEMENTATION OF HIGH EFFICIENCY DRIFT ELIMINATORS.	1.88 LB/H
CHARTER STEEL	CHARTER MANUFACTURING CO., INC.	OH	06/10/2004	COOLING TOWER	25000 GPM		1.5 LB/H
OHIO RIVER CLEAN FUELS, LLC	OHIO RIVER CLEAN FUELS, LLC	OH	11/20/2008	COOLING TOWERS	120425 T/H	HIGH EFFICIENCY DRIFT ELIMINATORS	2.4 LB/H
WEBERS FALLS ENERGY FACILITY	ENERGETIX	OK	10/22/2001	COOLING TOWER		DRIFT ELIMINATORS	1.2 LB/H
MUSTANG ENERGY PROJECT	MUSTANG POWER LLC	OK	02/12/2002	COOLING TOWERS		DRIFT ELIMINATORS	3.78 LB/H

Table C-4 Results of RBLC Search for Cooling Towers (PM) 12/15/2011

Facility Name	Company Name	State	Date	Process Name	Throughput	Control Method	Emission Limit
HORSESHOE ENERGY PROJECT	MUSTANG POWER LLC	OK	02/12/2002	COOLING TOWERS	111438 GPM	DRIFT ELIMINATORS DESIGN	0.001 % DRIFT
GENOVA OK I POWER PROJECT	GENOVA OKLAHOMA LLC	OK	06/13/2002	COOLING TOWER	12 CELLS	DRIFT ELIMINATORS	0.307 LB/H PER CELL
REDBUD POWER PLT	REDBUD ENERGY LP	OK	05/06/2002	COOLING TOWERS	102000 GPM	DRIFT ELIMINATORS	3.17 LB/H
KIAMICHI ENERGY FACILITY	KIOWA POWER PARTNERS LLC	OK	05/01/2001	COOLING TOWERS	0	DRIFT ELIMINATORS	14.1 LB/H
DUKE ENERGY STEPHENS, LLC STEPHENS ENERGY	DUKE ENERGY	OK	03/21/2003	COOLING TOWER		DRIFT ELIMINATORS	1.2 LB/H
ENID NITROGEN PLANT	KOCH NITROGEN COMPANY	OK	05/01/2008	COOLING TOWER		HIGH-EFFICIENCY DRIFT ELIMINATOR	0
MID AMERICAN STEEL ROLLING MILL	MID AMERICAN STEEL AND WIRE COMPANY	OK	09/08/2008	Cooling Towers	3000 GPM	high-efficiency draft eliminators	0
COGENERATION PLANT (AES-PRCP)	AES PUERTO RICO	PR	10/29/2001	COOLING TOWER	250000 GPM	DRIFT ELIMINATOR	0.33 LB/H
WILLIAMS REFINING & MARKETING, L.L.C.	WILLIAMS REFINING & MARKETING, L.L.C.	TN	04/03/2002	COOLING TOWER	MM 56 GAL/D		% OF 0.005 FLOW
RELIANT ENERGY-CHANNELVIEW COGENERATION FACILITY	RELIANT ENERGY CHANNELVIEW LP	TX	10/29/2001	COOLING TOWER			0.18 LB/H
ALCOA ALUMINUM SHEET, PLATE & FOIL	ALCOA FOIL PRODUCTS	TX	09/28/2001	COOLING TOWER		NONE INDICATED.	1.1 LB/H
SAM RAYBURN GENERATION STATION	SOUTH TEXAS ELECTRIC COOPERATIVE INC	TX	01/17/2002	COOLING TOWER, COOLTWR		DRIFT ELIMINATORS	0.84 LB/H
MONTGOMERY COUNTY POWER PROJECT	MC ENERGY PARTNERS LP	TX	06/27/2001	COOLING TOWER, CT-1		NONE INDICATED	1.13 LB/H
DEER PARK ENERGY CENTER	DEER PARK ENERGY CENTER LP	TX	08/22/2001	COOLING TOWER, CWT		NONE INDICATED	5.26 LB/H
CHOCOLATE BAYOU PLANT	BP AMOCO CHEMICAL COMPANY	TX	10/16/2001	NO.1 OLEFINS COOLING TOWER, AT-1210		NONE INDICATED	2.47 LB/H
CHOCOLATE BAYOU PLANT	BP AMOCO CHEMICAL COMPANY	TX	10/16/2001	NO. 2 OLEFINS COOLING TOWER, DAT-3201		NONE INDICATED	3.29 LB/H
ENNIS TRACTEBEL POWER	ENNIS-TRACTEBEL II LP	TX	01/31/2002	COOLING TOWER, CT-1		NONE INDICATED	0.5 LB/H
BRAZOS VALLEY ELECTRIC GENERATING FACILITY	BRAZOS VALLEY ENERGY LP	TX	12/31/2002	(2) COOLING TOWERS, CT-001& -002		NONE INDICATED	1.58 LB/H

Table C-4 Results of RBLC Search for Cooling Towers (PM) 12/15/2011

Facility Name	Company Name	State	Date	Process Name	Throughput	Control Method	Emission Limit
NAFTA REGION OLEFINS COMPLEX	BASF CORPORATION	TX	09/05/2001	COOLING TOWER, CT		NONE INDICATED	2.31 LB/H
DOW TEXAS OPERATIONS FREEPORT	THE DOW CHEMICAL COMPANY	TX	11/26/2002	COOLING TOWER, PROJECT A, A50CT1		NONE INDICATED	5.05 LB/H
DOW TEXAS OPERATIONS FREEPORT	THE DOW CHEMICAL COMPANY	TX	11/26/2002	COOLING TOWER, PROJECT B, B73CT2		NONE INDICATED	5.05 LB/H
STERNE ELECTRIC GENERATING FACILITY	STEAG POWER LLC	TX	12/06/2002	COOLING TOWERS, (3)		CHROMIUM BASED SOLUTIONS SHALL NOT BE USED.	1.01 LB/H
SMI TEXAS	STRUCTURAL METALS INC	TX	01/28/2004	COOLING TOWER-D MELT SHOP ELEC. EQUIP.			0.246 LB/H
SMI TEXAS	STRUCTURAL METALS INC	TX	01/28/2004	COOLING TOWER F-CASTER MOLDS (4)			0.142 LB/H
SMI TEXAS	STRUCTURAL METALS INC	TX	01/28/2004	COOLING TOWER GA-CASTER MOLDS (4)			0.199 LB/H
SMI TEXAS	STRUCTURAL METALS INC	TX	01/28/2004	COOLING TOWER GB-CASTER MOLDS (4)			0.249 LB/H
SMI TEXAS	STRUCTURAL METALS INC	TX	01/28/2004	COOLING TOWER-A EAF (4)			0.424 LB/H
SMI TEXAS	STRUCTURAL METALS INC	TX	01/28/2004	COOLING TOWER-B EAF (4)			1.14 LB/H
SMI TEXAS	STRUCTURAL METALS INC	TX	01/28/2004	COOLING TOWER-C MELT SHOP DUCTWORK			1.48 LB/H
JACK COUNTY POWER PLANT	DUKE ENERGY LP	TX	07/22/2003	COOLING TOWER VENTS (4)			0.4 LB/H
AIR PRODUCTS BAYTOWN I I	AIR PRODUCTS LP	TX	11/02/2004	COOLING TOWER			1.36 LB/H
CHOCOLATE BAYOU FACILITY	INEOS LLC	TX	06/30/2009	COOLING TOWER	165000 GPM	DRIFT ELIMINATORS	0.002 %
WALLULA POWER PLANT	WALLULA GENERATION, LLC	WA	01/03/2003	COOLING TOWER		0.0005% DRIFT RATE HAS	3.7 LB/H
WPS - WESTON PLANT	WISCONSIN PUBLIC SERVICE	WI	10/19/2004	UNIT 4 WATER COOLING TOWER (P26, S26)		HIGH EFFICIENCY DRIFT ELIMINATORS (0.002%)	3.76 LB/H
MAIDSVILLE	LONGVIEW POWER, LLC	WV	03/02/2004	COOLING TOWER		REDUNDANT BAFFLE AND MESH DEMISTER SYSTEM	0.9 LB/H
DRY FORK STATION	BASIN ELECTRIC POWER COOPERATIVE	WY	10/15/2007	COOLING TOWERS		MIST ELIMINATORS-0.005% DRIFT LOSS	0.005 %
BRAYTON POINT STATION	DOMINION ENERGY BRAYTON	MA	04/12/2009	NATURAL DRAFT COOLING	400000 GPM	DRIFT ELIMINATORS	1066 LB/H
CPV ST CHARLES	COMPETITIVE POWER VENTURES, INC./CPV MARYLAND, LLC	MD	11/12/2008	COOLING TOWER			0

Table C-4 Results of RBLC Search for Cooling Towers (PM) 12/15/2011

Facility Name	Company Name	State	Date	Process Name	Throughput	Control Method	Emission Limit
NEW STEEL	NEW STEEL INTERNATIONAL,	OH	05/06/2008	COOLING TOWERS (12)	1440000 GAL/H	DRIFT ELIMINATORS	3.42 LB/H
SPECIALTY MINERALS	SPECIALTY MINERALS INC. (SMI)	WI	07/22/2011	P40, P50 - COOLING TOWERS	700 GPM	HIGH EFFICIENCY MIST / DRIFT	0.0005 %
SPECIALTY MINERALS	SPECIALTY MINERALS INC. (SMI)	WI	07/22/2011	P60 - COOLING TOWER	200 GPM	HIGH EFFICIENCY MIST / DRIFT	0.0005 %
SPRNGERVILLE	TUCSON ELECTRIC POWER	AZ	04/29/2002	COOLING TOWERS		HIGH-EFFICIENCY DRIFT	0
WARREN COUNTY BIOMASS ENERGY FACILITY	OGETHORPE POWER CORPERATION	GA	12/17/2010	Cooling Tower	0	Drift Eliminators	0.0005 % EFFECTIVE NESS
NUCOR STEEL LOUISIANA	CONSOLIDATED ENVIRONMENTAL MANAGEMENT INC	LA	05/24/2010	Blast Furnace Cooling Tower	0	TDS < 1000 ppm and 0.0005% drift	0.32 LB/H
NUCOR STEEL LOUISIANA	CONSOLIDATED ENVIRONMENTAL MANAGEMENT INC	LA	05/24/2010	Iron Solidification Cooling Tower	0	TDS < 1000 ppm and 0.0005% drift	0.042 LB/H
NUCOR STEEL LOUISIANA	CONSOLIDATED ENVIRONMENTAL MANAGEMENT INC	LA	05/24/2010	Air Separation Plant Cooling Tower	0	TDS < 1000 ppm and 0.0005% drift	0.026 LB/H
SPIRITWOOD STATION	GREAT RIVER ENERGY	ND	09/14/2007	COOLING TOWER	80000 GPM	DRIFT ELIMINATOR	0.0005 %Drift
SUN COMPANY, INC., TOLEDO REFINERY	SUNOCO, INC.	OH	02/23/2009	COOLING TOWER	2000 GPM	DRIFT ELIMINATOR	0.12 LB/H
GAINESVILLE RENEWABLE ENERGY CENTER	GAINESVILLE REGIONAL UTILITY (GRU) DEERHAVEN	FL	12/28/2010	Mechanical draft cooling tower	78000 GPM	drift eliminatores to meet a proposed drift rate of 0.0005%	1 TPY
ST. CHARLES REFINERY	VALERO REFINING - NEW ORLEANS, LLC	LA	11/17/2009	COOLING TOWERS		DRIFT ELIMINATORS	0
SHINTECH PLAQUEMINE PLANT 2	SHINTECH LOUISIANA LLC	LA	07/10/2008	EQT120 COOLING TOWER (2C-4)	38750 GPM	GOOD DESIGNS, GOOD MAINTENANCE, AND MIST ELIMINATORS	0.08 LB/MMGAL
SHINTECH PLAQUEMINE PLANT 2	SHINTECH LOUISIANA LLC	LA	07/10/2008	EQT128 - COOLING TOWER (2M-7)	106000 GPM	GOOD DESIGN, GOOD MAINTENANCE, AND MIST ELIMINATORS	0.06 LB/MMGAL
LAKE CHARLES GASIFICATION FACILITY	LAKE CHARLES COGENERATION, LLC	LA	06/22/2009	COOLING TOWERS	436000 GPM	DRIFT ELIMINATORS	1.64 LB/H
ST. CHARLES REFINERY	VALERO REFINING - NEW ORLEANS, LLC	LA	12/31/2010	EQT0010 - Cooling Tower 403	61250 GPM	Drift eliminators	1.2 LB/H
ST. CHARLES REFINERY	VALERO REFINING - NEW ORLEANS, LLC	LA	12/31/2010	EQT0035 - Cooling Tower CT-600	45000 GPM	Drift eliminators	0.09 LB/H
ST. CHARLES REFINERY	VALERO REFINING - NEW ORLEANS, LLC	LA	12/31/2010	EQT0243 - HCU Cooling Tower	50000 GPM	Drift eliminators	0.1 LB/H
ST. CHARLES REFINERY	VALERO REFINING - NEW ORLEANS, LLC	LA	12/31/2010	EQT0244 - New West Cooling Tower	40000 GPM	drift eliminators	0.08 LB/H

Table C-4 Results of RBLC Search for Cooling Towers (PM) 12/15/2011

Facility Name	Company Name	State	Date	Process Name	Throughput	Control Method	Emission Limit
NINEMILE POINT ELECTRIC GENERATING PLANT	ENTERGY LOUISIANA LLC	LA	08/16/2011	CHILLER COOLING TOWER (CHILL CT)	12000 GPM	HIGH EFFICIENCY MIST ELIMINATOR	0.001 PERCENT DRIFT
NINEMILE POINT ELECTRIC GENERATING PLANT	ENTERGY LOUISIANA LLC	LA	08/16/2011	UNIT 6 COOLING TOWER	115847 GPM	HIGH EFFICIENCY MIST ELIMINATOR	0.0005 PERCENT DRIFT
PRYOR PLANT CHEMICAL	PRYOR PLANT CHEMICAL COMPANY	OK	02/23/2009	COOLING TOWER #2	2.4 MM GAL/H	MIST ELIMINATORS	1.92 LB/H
PRYOR PLANT CHEMICAL	PRYOR PLANT CHEMICAL COMPANY	OK	02/23/2009	COOLING TOWER #1	1.47 MM GAL/H	MIST ELIMINATORS	1.18 LB/H
NINEMILE POINT ELECTRIC GENERATING PLANT	ENTERGY LOUISIANA LLC	LA	08/16/2011	CHILLER COOLING TOWER (CHILL CT)	12000 GPM	HIGH EFFICIENCY MIST ELIMINATOR	0.001 PERCENT DRIFT
NINEMILE POINT ELECTRIC GENERATING PLANT	ENTERGY LOUISIANA LLC	LA	08/16/2011	UNIT 6 COOLING TOWER	115847 GPM	HIGH EFFICIENCY MIST ELIMINATOR	0.0005 PERCENT DRIFT
SAPPI CLOQUET LLC	SAPPI FINE PAPER PLC	MN	10/28/2009	COOLING TOWER		DRIFT ELIMINATORS	0.01 LB/H
TUSCALOOSA	HUNT REFINERY CO.	AL	09/28/2009	COOLING TOWER		DRIFT ELIMINATORS WILL BE INSTALLED, NOT MINIMIZE EMISSIONS.	0.4 T/YR PM10
NUCOR STEEL MARION, INC.	NUCOR STEEL	OH	12/23/2010	Melt Shop Spray Contact Cooling Tower	198360 GAL/H		0.22 LB/H
NUCOR STEEL MARION, INC.	NUCOR STEEL	OH	12/23/2010	Rolling Mill Contact Cooling Tower	225000 GAL/H		0.46 LB/H
CHOUTEAU POWER PLANT	ASSOCIATED ELECTRIC COOPERATIVE INC	OK	01/23/2009	COOLING TOWER	9 CELLS	DRIFT ELIMINATORS	0.4 LB/H/CELL
PANDA SHERMAN POWER STATION	PANDA SHERMAN POWER LLC	TX	02/03/2010	Cooling tower	0	Drift eliminators	0.0005 % DRIFT
WOLF HOLLOW POWER PLANT NO. 2	STARK POWER GENERATION II HOLDINGS, LLC	TX	03/03/2010	Cooling tower	0	Drift eliminators	0.0005 % DRIFT
LINDALE RENEWABLE ENERGY	LINDALE RENEWABLE ENERGY LLC	TX	01/08/2010	Cooling tower	0	Drift eliminators	0.0005 % DRIFT

Table C-5 Results of RBLC Search for Process Fugitives (VOC) 12/15/2011

Facility Name	Company Name	State	Date	Process Name	Control Method	Emission Limit
ARIZONA CLEAN FUELS YUMA	ARIZONA CLEAN FUELS YUMA LLC	AZ	04/14/2005	EQUIPMENT LEAKS		0
HIGHLANDS ETHANOL FACILITY	VERENIUM	FL	12/10/2009	Facility-wide Fugitive VOC Equipment Leaks	Subpart Vva LDAR	19.6 T/YR
SWEET SORGHUM-TO-ETHANOL ADVANCED BIOREFINERY	SOUTHEAST RENEWABLE FUELS (SRF), LLC	FL	12/23/2010	Fugitive VOC Emission Leaks (facility-wide)	Subpart Vva LDAR	6.52 TON/YR
ADM POLYMERS	ADM CORN PROCESSING - CLINTON	IA	11/30/2006	LEAKS FROM EQUIPMENT IN VOC SERVICE	LDAR (LEAK DETECTION AND REPAIR)	60.9 T/YR
ADM CORN PROCESSING - CEDAR RAPIDS	ARCHER DANIELS MIDLAND	IA	06/29/2007	VOC EMISSION FROM EQUIPMENT LEAKS	LDAR (LEAK DETECTION AND REPAIR)	47.67 T/YR
HOMELAND ENERGY SOLUTIONS, LLC, PN 06-672	HOMELAND ENERGY SOLUTIONS, LLC, PN 06-672	IA	08/08/2007	VOC EMISSIONS FROM EQUIPMENT LEAKS, F60 (07-A-971P)	BEST PRACTICES TO REDUCE EMISSIONS FROM LEAKING EQUIPMENT SUCH AS PUMPS, CONNECTIONS, AND VALVES.	13.68 T/YR
FLOPAM INC.	FLOPAM INC.	LA	06/14/2010	Equipment Leaks (Fugitives)	Comply with 40 CFR 65 Subpart F	2 LB/H
AVOCA, INC.	AVOCA, INC.	NC	07/29/2004	RECOVERY OPERATION EQUIPMENT LEAKS	LEAK DETECTION AND REPAIR (LDAR)	0
ABENGOA BIOENERY CORPORATION - YORK	ABENGOA BIOENERGY CORPORATION	NE	01/21/2004	EQUIPMENT LEAKS	A LEAK DETECTION AND REPAIR PROGRAM	0
ASA BLOOMINGBURG, LLC	ASALLIANCE BIOFUELS, LLC	OH	08/10/2006	FUGITIVE VOC EMISSIONS LEAKS FROM PROCESS UNITS	LEAK DETECTION AND REPAIR PROGRAM	7.11 T/YR
OHIO RIVER CLEAN FUELS, LLC	OHIO RIVER CLEAN FUELS, LLC	OH	11/20/2008	EQUIPMENT LEAKS	LEAKLESS/SEALLESS OR LOW-EMISSION PUMPS, VALVES, & COMPRESSORS	1.7 T/YR
PONCA CITY REFINERY	CONOCO INC	OK	07/01/2002	FUGITIVE COMPONENTS/EQUIPMENT LEAKS	REFINERY MACT LDAR OF PUMP SEALS, VALVES, FLANGES, AND PIPES.	0
PONCA CITY REFINERY	CONOCOPHILLIPS	OK	08/18/2004	EQUIPMENT LEAKS	Refinery MACT II LDAR	0
SOUTH COUNCIL OIL MILL	PRODUCER'S COOP OIL MILL	OK	01/21/2010	Equipment Leaks	Leak detection and repair (LDAR) program- comply with NSPS, Subpart VVa	0.014 GAL/T

Table C-6 Results of RBLC Search for Flares (CO and VOC) 12/15/2011

Facility Name	Company Name	State	Date	Process Name	Pollutant	Control Method	Emission Limit	
GE PLASTICS	GE PLASTICS	AL	07/13/2001	PHOSGENE PRODUCTION UNIT, FLARE	CO		0.09	LB/H
NUCOR YAMATO STEEL (ARMOREL)	NUCOR YAMATO STEEL	AR	10/10/2001	VTD HOTWELL FLARE	CO		0.005	LB/T
BLUEWATER PROJECT	STEELCORR, INC.	AR	07/22/2004	DEGASSER HOTWELL FLARE	CO	FLARE	1.06	LB/H
HOMELAND ENERGY SOLUTIONS, LLC, PN 06-672	HOMELAND ENERGY SOLUTIONS, LLC, PN 06-672	IA	08/08/2007	BIOMETHANATOR FLARE, EP11 (07-A-957P)	CO		0.37	LB/MMBTU
POWER COUNTY ADVANCED ENERGY CENTER	SOUTHEAST IDAHO ENERGY, LLC	ID	02/10/2009	AMMONIA STORAGE FLARE, SRC27	CO	GOOD COMBUSTION PRACTICES	0	
GEISMAR PLANT	SHELL CHEMICAL LP	LA	02/26/2002	PLANT FLARE, #03-73	CO		1801.18	LB/H
DUKE ENERGY FIELD SERVICES - MINDEN	DUKE ENERGY FIELD SERVICES - MINDEN	LA	01/24/2002	FLARE	CO		0.26	LB/H
ORION REFINING CORP (NOW VALERO)	ORION REFINING CORP (NOW VALERO)	LA	01/10/2002	FLARE NO.1 (EMISSION PT. 15-77)	CO		149	LB/H
ORION REFINING CORP (NOW VALERO)	ORION REFINING CORP (NOW VALERO)	LA	01/10/2002	FLARE NO. 2 (EMISSION PT. 12-81)	CO		149	LB/H
STYRENE MONOMER PLANT	COS-MAR COMPANY	LA	02/11/2003	FLARE GQ-1306	CO	PROPER DESIGN AND MAINT.	1561.7	LB/H
STYRENE MONOMER PLANT	COS-MAR COMPANY	LA	02/11/2003	FLARE GQ-2310	CO	PROPER DESIGN AND MAINT.	895.6	LB/H
STYRENE MONOMER PLANT	COS-MAR COMPANY	LA	02/11/2003	FLARE GQ-304	CO	PROPER DESIGN AND MAINT.	1475.3	LB/H
IVANHOE CARBON BLACK PLANT	DEGUSSA ENGINEERED CARBONS, LP	LA	12/09/2004	FLARE, UNIT 2	CO		79.03	LB/H
IVANHOE CARBON BLACK PLANT	DEGUSSA ENGINEERED CARBONS, LP	LA	12/09/2004	FLARE, UNIT 3	CO		107.91	LB/H
IVANHOE CARBON BLACK PLANT	DEGUSSA ENGINEERED CARBONS, LP	LA	12/09/2004	FLARE, UNIT 4	CO		64.6	LB/H
IVANHOE CARBON BLACK PLANT	DEGUSSA ENGINEERED CARBONS, LP	LA	12/09/2004	FLARE, UNIT 5	CO		64.6	LB/H
GARYVILLE REFINERY	MARATHON PETROLEUM CO LLC	LA	12/27/2006	HYDROGEN PLANT FLARE (52-08)	CO	COMPLY WITH 40 CFR 60.18	20.22	MAX LB/H
ST. CHARLES REFINERY	VALERO REFINING - NEW ORLEANS, LLC	LA	11/17/2009	FLARE 1-5 (15-77, 12-81, 2004-5A, 2004-5B & 2005-38)	CO	COMPLY W/ 40 CFR 63 SUBPART A	0	
LAKE CHARLES GASIFICATION FACILITY	LAKE CHARLES COGENERATION, LLC	LA	06/22/2009	ACID GAS FLARE	CO	GOOD DESIGN AND MONITORING	0.01	LB/H
LAKE CHARLES GASIFICATION FACILITY	LAKE CHARLES COGENERATION, LLC	LA	06/22/2009	HYDROCARBON/GASIFIERS STARTUP FLARE	CO	GOOD DESIGN AND MONITORING	333.7	LB/H
DIRECT REDUCTION IRON PLANT	CONSOLIDATED ENVIRONMENTAL MANAGEMENT INC - NUCOR	LA	01/27/2011	DRI-110 - DRI Unit No. 1 Hot Flare	CO	GOOD COMBUSTION PRACTICES	1.47	LB/H

Table C-6 Results of RBLC Search for Flares (CO and VOC) 12/15/2011

Facility Name	Company Name	State	Date	Process Name	Pollutant	Control Method	Emission Limit	
DIRECT REDUCTION IRON PLANT	CONSOLIDATED ENVIRONMENTAL MANAGEMENT INC - NUCOR	LA	01/27/2011	DRI-210 - DRI Unit No. 1 Hot Flare	CO	GOOD COMBUSTION PRACTICES	1.27	LB/H
UNIVERSITY OF NEW HAMPSHIRE	UNIVERSITY OF NEW HAMSHIRE	NH	07/25/2007	UTILITY FLARE	CO	GOOD COMBUSTION PRACTICES	0.37	LB/MMBTU
FOUNTAIN AVENUE LANDFILL	NYC DEPARTMENT OF ENVIRONMENTAL PROTECTION	NY	06/29/2006	LANDFILL FLARE	CO	GOOD COMBUSTION PRACTICES	0	
CHARTER STEEL	CHARTER MANUFACTURING CO., INC.	OH	06/10/2004	VACUUM OXYGEN DEGASSER VESSEL W/ FLARE	CO		23.31	LB/H
SUN COMPANY, INC., TOLEDO REFINERY	SUNOCO, INC.	OH	02/23/2009	FLARE, STEAM ASSISTED	CO		12.8	LB/H
RUMPKE SANITARY LANDFILL	RUMPKE SANITARY LANDFILL	OH	12/23/2008	CANDLESTICK FLARE (5)	CO	FLARE IS CONTROL	22.5	LB/H
RUMPKE SANITARY LANDFILL	RUMPKE SANITARY LANDFILL	OH	12/23/2008	OPEN FLARE	CO	FLARE IS CONTROL	22.5	LB/H
PONCA CITY REFINERY	CONOCO INC	OK	07/01/2002	FLARE	CO	GOOD COMBUSTION PRACTICE	0.37	LB/MMBTU
RHODE ISLAND CENTRAL	RIDGEWOOD POWER	RI	05/12/2009	ULE FLARE (REGEN)	CO		0.06	LB/MMBTU
VALERO REFINING COMPANY- CORPUS CHRISTI REFINERY	VALERO REFINING COMPANY-CORPUS CHRISTI REFINERY	TX	06/11/2002	GROUND FLARE	CO		472	LB/H
VALERO REFINING COMPANY- CORPUS CHRISTI REFINERY	VALERO REFINING COMPANY-CORPUS CHRISTI REFINERY	TX	06/11/2002	MAIN FLARE	CO		472	LB/H
BASF CORPORATION	BASF CORPORATION	TX	12/12/2001	CONTINUOUS FLARE (POINT NO. 4-2-4)	CO		0.99	LB/H
HYCO	CORPORATION	TX	06/22/2001	FLARE STACK	CO	Design & Operation Stds.	305.86	LB/H
BAYTOWN OLEFINS PLANT	EXXON MOBIL CHEMICAL COMPANY	TX	04/05/2001	FLARE, FLAREX	CO	NONE INDICATED	12.96	LB/H
BAYTOWN OLEFINS PLANT	EXXON MOBIL CHEMICAL COMPANY	TX	04/05/2001	SECONDARY FLARE	CO	NONE INDICATED	1	LB/H
BAYTOWN OLEFINS PLANT	EXXON MOBIL CHEMICAL COMPANY	TX	04/05/2001	PRIMARY FLARE	CO	NONE INDICATED	26.6	LB/H
CHOCOLATE BAYOU PLANT	BP AMOCO CHEMICAL COMPANY	TX	10/16/2001	DOCK FLARE, AM-1500	CO	NONE INDICATED	0.19	LB/H
CHOCOLATE BAYOU PLANT	BP AMOCO CHEMICAL COMPANY	TX	10/16/2001	NO. 1 OLEFINS FLARE, DM-1101	CO	NONE INDICATED	88.74	LB/H
CHOCOLATE BAYOU PLANT	BP AMOCO CHEMICAL COMPANY	TX	10/16/2001	NO. 2 OLEFINS FLARE, DDM-3101	CO	NONE INDICATED	72.24	LB/H
NAFTA REGION OLEFINS COMPLEX	BASF CORPORATION	TX	09/05/2001	HIGH PRESSURE FLARE, P-7	CO	NONE INDICATED	72.5	LB/H
NAFTA REGION OLEFINS COMPLEX	BASF CORPORATION	TX	09/05/2001	LOW PRESSURE FLARE, P-6	CO	NONE INDICATED	3.81	LB/H
ATOFINA CHEMICALS INCORPORATED	ATOFINA CHEMICALS INCORPORATED	TX	12/19/2002	FLARE, SSM	CO	COMPLY WITH 40 CFR 60.18	322.97	LB/H
ATOFINA CHEMICALS INCORPORATED	ATOFINA CHEMICALS INCORPORATED	TX	12/19/2002	FLARE, TOTAL HOURLY AND ANNUAL	CO	COMPLY WITH 40 CFR 60.18	322.97	LB/H

Table C-6 Results of RBLC Search for Flares (CO and VOC) 12/15/2011

Facility Name	Company Name	State	Date	Process Name	Pollutant	Control Method	Emission Limit	
ATOFINA CHEMICALS INCORPORATED	ATOFINA CHEMICALS INCORPORATED	TX	12/19/2002	FLARE, STEADY STATE OPERATION	CO	COMPLY WITH 40 CFR 60.18	322.97	LB/H
LIMESTONE ELECTRIC GENERATING STATION	RELIANT ENERGY INC	TX	05/23/2001	FCCU FLARE	CO	NONE INDICATED	88.38	LB/H
LIMESTONE ELECTRIC GENERATING STATION	RELIANT ENERGY INC	TX	05/23/2001	HCU FLARE, FL-4	CO	NONE INDICATED	2.8	LB/H
SALT CREEK GAS PLANT	EXXON MOBIL CORPORATION	TX	01/31/2003	(2) FLARES, EPN 9 & 29	CO	NONE INDICATED	37.2	LB/H
SALT CREEK GAS PLANT	EXXON MOBIL CORPORATION	TX	01/31/2003	HP TEG FIREBOX, EPN30	CO	NONE INDICATED	0.25	LB/H
SALT CREEK GAS PLANT	EXXON MOBIL CORPORATION	TX	01/31/2003	COOPER-BESSEMER ENGINE, #GMVH-12, EPN1	CO	NONE INDICATED	6.35	LB/H
SALT CREEK GAS PLANT	EXXON MOBIL CORPORATION	TX	01/31/2003	(2) CLARK ENGINE, #TLAB-6, EPN2&3	CO	NONE INDICATED	8.99	LB/H
LYONDELL - CITGO REFINING, LP	LYONDELL - CITGO REFINING, LP	TX	03/14/2002	BOILER NO. 13	CO	NONE INDICATED	30.2	LB/H
LYONDELL - CITGO REFINING, LP	LYONDELL - CITGO REFINING, LP	TX	03/14/2002	BOILERS 14 AND 15	CO	GOOD COMBUSTION DESIGN	48.3	LB/H
LA PORTE POLYPROPYLENE PLANT	ATOFINA PETROCHEMICALS INC	TX	11/05/2001	MONUMENT NO. 2 FLARE	CO	NONE INDICATED	0.41	LB/H
LA PORTE POLYPROPYLENE PLANT	ATOFINA PETROCHEMICALS INC	TX	11/05/2001	TRAIN NO. 8 FLARE	CO	NONE INDICATED	0.19	LB/H
LA PORTE POLYPROPYLENE PLANT	ATOFINA PETROCHEMICALS INC	TX	11/05/2001	ALKYL FLARE	CO	NONE INDICATED	0.11	LB/H
SYNTHESIS GAS UNIT	EXXON CHEMICAL AMERICAS	TX	06/01/2001	FLARE, FS28	CO	NONE INDICATED	1981.27	LB/H
HOUSTON BREWERY	ANHEUSER-BUSCH INC	TX	05/09/2001	FLARE, BERS-1	CO	NONE INDICATED	39.6	LB/H
BP TEXAS CITY CHEMICAL PLANT B	BP AMOCO CHEMICAL CO.	TX	12/05/2002	FLARE, BDO UNIT	CO		21.35	LB/H
SHELL OIL DEER PARK	SHELL OIL COMPANY	TX	07/30/2004	TWO FLARES	CO		500	PPMV
SHELL OIL DEER PARK	SHELL OIL COMPANY	TX	07/30/2004	NORTH PROPERTY FLARE	CO		500	PPMV
SHELL OIL DEER PARK	SHELL OIL COMPANY	TX	07/30/2004	CCU FLARE	CO		500	PPMV
SHELL OIL DEER PARK	SHELL OIL COMPANY	TX	07/30/2004	WEST PROPERTY FLARE	CO		500	PPMV
UCC SEADRIFT OPERATIONS	UNION CARBIDE CORPORATION - A SUBSIDIARY OF DOW CC	TX	04/03/2004	SMALL FLARE	CO	COMPLY WITH 40 CFR 60.18	52.86	LB/H
UCC SEADRIFT OPERATIONS	UNION CARBIDE CORPORATION - A SUBSIDIARY OF DOW CC	TX	04/03/2004	LARGE FLARE	CO	COMPLY WITH 40 CFR 60.18	22.69	LB/H
UCC SEADRIFT OPERATIONS	UNION CARBIDE CORPORATION - A SUBSIDIARY OF DOW CC	TX	04/03/2004	LARGE FLARE START-UP, SHUTDOWN, MAINTENANCE	CO	Good Practice During Events	280.63	LB/H

Table C-6 Results of RBLC Search for Flares (CO and VOC) 12/15/2011

Facility Name	Company Name	State	Date	Process Name	Pollutant	Control Method	Emission Limit	
UCC SEADRIFT OPERATIONS	UNION CARBIDE CORPORATION - A SUBSIDIARY OF DOW CC	TX	04/03/2004	FLARE BEFOER THE RECYCLE COMPRESSOR PROJECTS IS COMPLETE	CO	COMPLY WITH 40 CFR 60.18	100.77	LB/H
UCC SEADRIFT OPERATIONS	UNION CARBIDE CORPORATION - A SUBSIDIARY OF DOW CC	TX	04/03/2004	FLARE AFTER THE RECYCLE COMPRESSOR PROJECTS IS COMPLETE	CO	COMPLY WITH 40 CFR 60.18	92.98	LB/H
UCC SEADRIFT OPERATIONS	UNION CARBIDE CORPORATION - A SUBSIDIARY OF DOW CC	TX	04/03/2004	FLARE NATURAL GAS COMBUSTION (6)	CO	COMPLY WITH 40 CFR 60.18	86.18	LB/H
CONTINENTAL CARBON SUNRAY PLANT	CONTINENTAL CARBON COMPANY	TX	03/18/2005	PILOT PLANT FLARE	CO		159.63	LB/H
SALT CREEK GAS PLANT	EXXON MOBIL CORPORATION	TX	01/31/2003	FLARES (2)	CO		37.2	LB/H
FORMOSA POINT COMFORT PLANT	FORMOSA PLASTICS CORPORATION TEXAS	TX	05/09/2005	FLARE	CO		9.77	LB/H
FORMOSA POINT COMFORT PLANT	FORMOSA PLASTICS CORPORATION TEXAS	TX	05/09/2005	FLARE (1067)	CO		13.84	LB/H
FORMOSA POINT COMFORT PLANT	FORMOSA PLASTICS CORPORATION TEXAS	TX	05/09/2005	FLARE (1087)	CO		12.42	LB/H
FORMOSA POINT COMFORT PLANT	FORMOSA PLASTICS CORPORATION TEXAS	TX	05/09/2005	FLARE (8003B)	CO		3.6	LB/H
CITGO CORPUS CHRISTI	CITGO REFINING AND	TX	04/20/2005	ACID GAS FLARE	CO		3.1	LB/H
CITGO CORPUS CHRISTI REFINERY - WEST PLANT	CITGO REFINING AND CHEMICALS COMAPNY LP	TX	04/20/2005	SOUR WATER STRIPPER FLARE	CO		1.9	LB/H
CITGO CORPUS CHRISTI REFINERY - WEST PLANT	CITGO REFINING AND CHEMICALS COMAPNY LP	TX	04/20/2005	FLARE-COKE DRUM BLOWDOWN	CO		43.2	LB/H
AIR PRODUCTS BAYTOWN I I	AIR PRODUCTS LP	TX	11/02/2004	FLARE (NORMAL OPERATION)	CO		797.7	LB/H
ROHM AND HAAS CHEMICALS LLC LONE STAR PLANT	ROHM AND HAAS TEXAS INCORPORATION	TX	03/24/2005	N5/6 FLARE	CO		450.52	LB/H
FLINT HILLS RESOURCES INSTALLATION OF BOILERS	FLINT HILLS RESOURCES	TX	01/24/2005	FLARES 5,6	CO		884.57	LB/H
BASF ETHYLENE/PROPYLENE CRACKER	BASF FINA PETROCHEMICALS	TX	02/03/2006	GROUND FLARE	CO		15794.4	LB/H
ENTERPRISE MONT BELVIEU COMPLEX	ENTERPRISE PRODUCTS OPEATING LP	TX	01/24/2006	FLARE-NORMAL OPERATION	CO		372.7	LB/H
ENTERPRISE MONT BELVIEU COMPLEX	ENTERPRISE PRODUCTS OPEATING LP	TX	01/24/2006	FLARE-START-UP, MAINTENANCE, AND SHUTDOWN	CO		354.3	LB/H

Table C-6 Results of RBLC Search for Flares (CO and VOC) 12/15/2011

Facility Name	Company Name	State	Date	Process Name	Pollutant	Control Method	Emission Limit	
AIR PRODUCTS HYDROGEN, STEAM, AND ELECTRICITY PRODUCTION	AIR PRODUCTS	TX	08/18/2006	FLARE PILOTS ONLY	CO		0.043	LB/H
AIR PRODUCTS HYDROGEN, STEAM, AND ELECTRICITY PRODUCTION	AIR PRODUCTS	TX	08/18/2006	FLARE-MSS	CO		1654	LB/H
VALERO THREE RIVERS REFINERY	DIAMOND SHAMROCK REFINING COMPANY L.P.	TX	08/19/2010	FLARE MSS	CO	BEST PRACTICES	0	
ETHYLENE PROCESS FLARE	CHEVRON PHILLIPS CHEMICAL COMPANY LP	TX	10/27/2011	Ethylene Process Flare	CO	Process Flare	136.37	TPY
ATLANTIC WASTE DISPOSAL LANDFILL	WM ATLANTIC WASTE DISPOSAL INC.	VA	02/05/2003	FLARES, 2500 SCFM LGF (2)	CO	Proper Maint. & Monitoring	12.3	LB/H
ATLANTIC WASTE DISPOSAL LANDFILL	WM ATLANTIC WASTE DISPOSAL INC.	VA	02/05/2003	FLARES, COMBINED	CO	Proper Maint. & Monitoring	334	T/YR
ATLANTIC WASTE DISPOSAL LANDFILL	WM ATLANTIC WASTE DISPOSAL INC.	VA	02/05/2003	FLARES, 3500 SCFM LFG (3)	CO	Proper Maint. & Monitoring	17.3	LB/H
BETHEL LANDFILL	USA WASTE OF VIRGINIA LANDFILLS	VA	07/25/2006	CONTROL SYSTEM FLARES	CO		19.9	LB/H
NEW ENGLAND WASTE SERVICES OF VERMONT, INC.	NEW ENGLAND WASTE SERVICES, INC.	VT	12/16/2004	LANDFILL GAS FLARE	CO	LOW EMISSION DESIGN	0.37	LB/MMBTU
BLUEWATER PROJECT	STEELCORR, INC.	AR	07/22/2004	DEGASSER HOTWELL FLARE	VOC	Natural Gas Combustion Only	1.06	LB/H
BREITBURN ENERGY-NEWLOVE LEASE	BREITBURN ENERGY COMPANY LP	CA	07/17/2009	Horizontal Enclosed Flare	VOC	Forced draft enclosed flare	0.0013	LB/MMBTU
HOMELAND ENERGY SOLUTIONS, LLC, PN 06-672	HOMELAND ENERGY SOLUTIONS, LLC, PN 06-672	IA	08/08/2007	STARTUP AND SHUTDOWN FLARES 1, 2, AND 3, EP33A, EP33B, AND EP33C (07-A-967P, 07-A-968P, AND 07-A-969P)	VOC	FLARE	0.006	LB/MMBTU
DUKE ENERGY FIELD SERVICES - MINDEN	DUKE ENERGY FIELD SERVICES - MINDEN	LA	01/24/2002	FLARE	VOC		2.82	LB/H
(NOW VALERO)	VALERO)	LA	01/10/2002	FLARE NO.1 (EMISSION PT. 15-77)	VOC	98% DRE OF VOC IN FLARE	25.4	LB/H
(NOW VALERO)	VALERO)	LA	01/10/2002	FLARE NO. 2 (EMISSION PT. 12-81)	VOC	98% DRE OF VOC IN FLARE	25.4	LB/H
NORCO CHEMICAL PLANT, M-UNIT	SHELL CHEMICAL LP	LA	03/21/2003	W.S. GROUND FLARE	VOC		241.71	LB/H
IVANHOE CARBON BLACK PLANT	DEGUSSA ENGINEERED CARBONS, LP	LA	12/09/2004	FLARE, UNIT 2	VOC		8.31	LB/H
IVANHOE CARBON BLACK PLANT	DEGUSSA ENGINEERED CARBONS, LP	LA	12/09/2004	FLARE, UNIT 3	VOC		11.35	LB/H
IVANHOE CARBON BLACK PLANT	DEGUSSA ENGINEERED CARBONS, LP	LA	12/09/2004	FLARE, UNIT 4	VOC		6.79	LB/H
IVANHOE CARBON BLACK PLANT	DEGUSSA ENGINEERED CARBONS, LP	LA	12/09/2004	FLARE, UNIT 5	VOC		6.79	LB/H
GARYVILLE REFINERY	MARATHON PETROLEUM CO LLC	LA	12/27/2006	HYDROGEN PLANT FLARE (52-08)	VOC	COMPLY WITH 40 CFR 60.18	0.01	MAX LB/H

Table C-6 Results of RBLC Search for Flares (CO and VOC) 12/15/2011

Facility Name	Company Name	State	Date	Process Name	Pollutant	Control Method	Emission Limit	
ST. CHARLES REFINERY	VALERO REFINING - NEW ORLEANS, LLC	LA	11/17/2009	ARU FLARE (2008-36)	VOC	COMPLY WITH 40 CFR 60.18	0	
SUN COMPANY, INC., TOLEDO REFINERY	SUNOCO, INC.	OH	02/23/2009	FLARE, STEAM ASSISTED	VOC	FLARE IS CONTROL FOR HC	0.84	LB/H
RUMPKE SANITARY LANDFILL	RUMPKE SANITARY LANDFILL	OH	12/23/2008	OPEN FLARE	VOC	FLARE IS CONTROL	0.16	LB/H
PONCA CITY REFINERY	CONOCO INC	OK	07/01/2002	FLARE	VOC	GOOD COMBUSTION PRACTICE	0.14	LB/MMBTU
RHODE ISLAND CENTRAL GENCO, LLC	RIDGEWOOD POWER MANAGEMENT	RI	05/12/2009	ULE FLARE (REGEN)	VOC		0	
RHODE ISLAND CENTRAL GENCO, LLC	RIDGEWOOD POWER MANAGEMENT	RI	05/12/2009	ENCLOSED FLARES	VOC		0	
VALERO REFINING COMPANY- CORPUS CHRISTI REFINERY	VALERO REFINING COMPANY- CORPUS CHRISTI REFINERY	TX	06/11/2002	FACILITIES VENTING TO MAIN FLARE- GROUP TWO	VOC	FLARE. SEE POLLUTANT NOTES.	4013	LB/H
VALERO REFINING COMPANY- CORPUS CHRISTI REFINERY	VALERO REFINING COMPANY- CORPUS CHRISTI REFINERY	TX	06/11/2002	GROUND FLARE	VOC	Monitoring	226	LB/H
BASF CORPORATION	BASF CORPORATION	TX	12/12/2001	CONTINUOUS FLARE (POINT NO. 4-2-4)	VOC		0.42	LB/H
AIR LIQUIDE - FREEPORT HYCO	AIR LIQUIDE AMERICA CORPORATION	TX	06/22/2001	FLARE STACK	VOC	GOOD DESIGN AND MONITORING	30.21	LB/H
BAYTOWN OLEFINS PLANT	EXXON MOBIL CHEMICAL COMPANY	TX	04/05/2001	FLARE, FLAREX	VOC	NONE INDICATED	5.47	LB/H
CHOCOLATE BAYOU PLANT	BP AMOCO CHEMICAL COMPANY	TX	10/16/2001	NO. 1 OLEFINS FLARE, DM-1101	VOC	THE FLARE IS A VOC CONTROL	151.4	LB/H
CHOCOLATE BAYOU PLANT	BP AMOCO CHEMICAL COMPANY	TX	10/16/2001	NO. 2 OLEFINS FLARE, DDM-3101	VOC	THE FLARE IS A VOC CONTROL	115.57	LB/H
NAFTA REGION OLEFINS COMPLEX	BASF CORPORATION	TX	09/05/2001	HIGH PRESSURE FLARE, P-7	VOC		90.04	LB/H
NAFTA REGION OLEFINS COMPLEX	BASF CORPORATION	TX	09/05/2001	LOW PRESSURE FLARE, P-6	VOC	NONE INDICATED	9.75	LB/H
					VOC			
ATOFINA CHEMICALS INCORPORATED	ATOFINA CHEMICALS INCORPORATED	TX	12/19/2002	FLARE, SSM	VOC	THE FLARE IS A VOC CONTROL	32.38	LB/H
ATOFINA CHEMICALS INCORPORATED	ATOFINA CHEMICALS INCORPORATED	TX	12/19/2002	FLARE, TOTAL HOURLY AND ANNUAL	VOC	THE FLARE IS A VOC CONTROL	64.71	LB/H
ATOFINA CHEMICALS INCORPORATED	ATOFINA CHEMICALS INCORPORATED	TX	12/19/2002	FLARE, STEADY STATE OPERATION	VOC	THE FLARE IS A VOC CONTROL	32.33	LB/H
ATOFINA CHEMICALS INCORPORATED	ATOFINA CHEMICALS INCORPORATED	TX	12/19/2002	(2) STEAM BOILERS, X-426A AND X-426B	VOC	NONE INDICATED.	0.09	LB/H
LIMESTONE ELECTRIC GENERATING STATION	RELIANT ENERGY INC	TX	05/23/2001	FCCU FLARE	VOC	THE FLARE CONTROLS VOC	35.32	LB/H
LIMESTONE ELECTRIC GENERATING STATION	RELIANT ENERGY INC	TX	05/23/2001	HCU FLARE, FL-4	VOC	THE FLARE IS A VOC CONTROL	1.13	LB/H
LA PORTE POLYPROPYLENE PLANT	ATOFINA PETROCHEMICALS INC	TX	11/05/2001	MONUMENT NO. 2 FLARE	VOC	THE FLARE IS A VOC CONTROL	0.6	LB/H
LA PORTE POLYPROPYLENE PLANT	ATOFINA PETROCHEMICALS INC	TX	11/05/2001	TRAIN NO. 8 FLARE	VOC	THE FLARE IS A VOC CONTROL	0.53	LB/H

Table C-6 Results of RBLC Search for Flares (CO and VOC) 12/15/2011

Facility Name	Company Name	State	Date	Process Name	Pollutant	Control Method	Emission Limit	
LA PORTE POLYPROPYLENE PLANT	ATOFINA PETROCHEMICALS INC	TX	11/05/2001	ALKYL FLARE	VOC	THE FLARE IS A VOC CONTROL	0.41	LB/H
SYNTHESIS GAS UNIT	EXXON CHEMICAL AMERICAS	TX	06/01/2001	FLARE, FS28	VOC	NONE INDICATED	2.26	LB/H
INDIAN ROCK GATHERING COMPANY LP	INDIAN ROCK GATHERING COMPANY LP	TX	11/22/2002	FLARE, LOW PRESSURE	VOC	98% VOC DRE, Meet 40 CFR 60.18	3.82	LB/H
INDIAN ROCK GATHERING COMPANY LP	INDIAN ROCK GATHERING COMPANY LP	TX	11/22/2002	FLARE, HIGH PRESSURE	VOC	98% VOC DRE, Meet 40 CFR 60.18	1.08	LB/H
BP TEXAS CITY CHEMICAL PLANT B	BP AMOCO CHEMICAL CO.	TX	12/05/2002	FLARE, BDO UNIT	VOC		15.08	LB/H
UCC SEADRIFT OPERATIONS	UNION CARBIDE CORPORATION - A SUBSIDIARY OF DOW CC	TX	04/03/2004	SMALL FLARE	VOC	COMPLY WITH 40 CFR 60.18	48.34	LB/H
UCC SEADRIFT OPERATIONS	UNION CARBIDE CORPORATION - A SUBSIDIARY OF DOW CC	TX	04/03/2004	LARGE FLARE	VOC	COMPLY WITH 40 CFR 60.18	48.78	LB/H
UCC SEADRIFT OPERATIONS	UNION CARBIDE CORPORATION - A SUBSIDIARY OF DOW CC	TX	04/03/2004	FLARE BEFOER THE RECYCLE COMPRESSOR PROJECTS IS COMPLETE	VOC	COMPLY WITH 40 CFR 60.18	105.61	LB/H
UCC SEADRIFT OPERATIONS	UNION CARBIDE CORPORATION - A SUBSIDIARY OF DOW CC	TX	04/03/2004	FLARE AFTER THE RECYCLE COMPRESSOR PROJECTS IS COMPLETE	VOC	COMPLY WITH 40 CFR 60.18	98.66	LB/H
UCC SEADRIFT OPERATIONS	UNION CARBIDE CORPORATION - A SUBSIDIARY OF DOW CC	TX	04/03/2004	FLARE NATURAL GAS COMBUSTION (6)	VOC	COMPLY WITH 40 CFR 60.18	3	LB/H
SALT CREEK GAS PLANT	EXXON MOBIL CORPORATION	TX	01/31/2003	FLARES (2)	VOC		42.82	LB/H
COMFORT PLANT	CORPORATION TEXAS	TX	05/09/2005	FLARE	VOC		0.22	LB/H
FORMOSA POINT COMFORT PLANT	FORMOSA PLASTICS CORPORATION TEXAS	TX	05/09/2005	FLARE (1067)	VOC		7.55	LB/H
FORMOSA POINT COMFORT PLANT	FORMOSA PLASTICS CORPORATION TEXAS	TX	05/09/2005	FLARE (1087)	VOC		0.14	LB/H
FORMOSA POINT COMFORT PLANT	FORMOSA PLASTICS CORPORATION TEXAS	TX	05/09/2005	FLARE (8003B)	VOC		1.21	LB/H
CITGO CORPUS CHRISTI REFINERY - WEST PLANT	CITGO REFINING AND CHEMICALS COMAPNY LP	TX	04/20/2005	ACID GAS FLARE	VOC		3.6	LB/H
REFINERY - WEST PLANT	CHEMICALS COMAPNY LP	TX	04/20/2005	FLARE-COKE DRUM BLOWDOWN	VOC		27.9	LB/H
I I	AIR PRODUCTS LP	TX	11/02/2004	FLARE (NORMAL OPERATION)	VOC		0.01	LB/H
ROHM AND HAAS CHEMICALS LLC LONE STAR PLANT	ROHM AND HAAS TEXAS INCORPORATION	TX	03/24/2005	N3/7 FEED AND EXIT GAS FLARE	VOC		0.22	LB/H
BASF ETHYLENE/PROPYLENE CRACKER	BASF FINA PETROCHEMICALS	TX	02/03/2006	GROUND FLARE	VOC		24418.1	LB/H

Table C-6 Results of RBLC Search for Flares (CO and VOC) 12/15/2011

Facility Name	Company Name	State	Date	Process Name	Pollutant	Control Method	Emission Limit	
ENTERPRISE MONT BELVIEU COMPLEX	ENTERPRISE PRODUCTS OPEATING LP	TX	01/24/2006	FLARE-NORMAL OPERATION	VOC		468.1	LB/H
ENTERPRISE MONT BELVIEU COMPLEX	ENTERPRISE PRODUCTS OPEATING LP	TX	01/24/2006	FLARE-START-UP, MAINTENANCE, AND SHUTDOWN	VOC		63.7	LB/H
AIR PRODUCTS HYDROGEN, STEAM, AND ELECTRICITY PRODUCTION	AIR PRODUCTS	TX	08/18/2006	FLARE PILOTS ONLY	VOC		0.031	LB/H
AIR PRODUCTS HYDROGEN, STEAM, AND ELECTRICITY PRODUCTION	AIR PRODUCTS	TX	08/18/2006	FLARE-MSS	VOC		0.2	LB/H
VALERO THREE RIVERS REFINERY	DIAMOND SHAMROCK REFINING COMPANY L.P.	TX	08/19/2010	FLARE MSS	VOC	BEST PRACTICES	0	
SABINA PETROCHEMICALS LLC	SABINA PETROCHEMICALS LLC	TX	08/20/2010	HIGH AND LOW PRESSURE FLARES	VOC	FLARE	0.32	T/YR
ATLANTIC WASTE DISPOSAL LANDFILL	WM ATLANTIC WASTE DISPOSAL INC.	VA	02/05/2003	FLARES, COMBINED	VOC	Proper Maint. & Monitoring	26.5	T/YR
ATLANTIC WASTE DISPOSAL LANDFILL	WM ATLANTIC WASTE DISPOSAL INC.	VA	02/05/2003	FLARES, COMBINED	VOC	Proper Maint. & Monitoring	10.2	T/YR
ATLANTIC WASTE DISPOSAL LANDFILL	WM ATLANTIC WASTE DISPOSAL INC.	VA	02/05/2003	FLARES, 3500 SCFM LFG (3)	VOC	Proper Maint. & Monitoring	0.6	LB/H
ATLANTIC WASTE DISPOSAL LANDFILL	WM ATLANTIC WASTE DISPOSAL INC.	VA	02/05/2003	FLARES, 3500 SCFM LFG (3)	VOC	Proper Maint. & Monitoring	1.4	LB/H
UWGP - FUEL GRADE ETHANOL PLANT	UNITED WISCONSIN GRAIN PRODUCERS	WI	08/14/2003	BYPASS FLARE, BIOMETHANATOR - P11	VOC	NO MORE THAN 5040 H/YR	0.3	LB/H
UWGP - FUEL GRADE ETHANOL PLANT	UNITED WISCONSIN GRAIN PRODUCERS	WI	08/14/2003	LOADING RACK WITH FLARE, P50	VOC	FLARE / VAPOR COLLECTION	1.4	LB/H

Appendix D

SCR Cost Analysis for Hot Oil Heaters

US EPA ARCHIVE DOCUMENT

US EPA ARCHIVE DOCUMENT

SCR BACT Analysis

Heater/SCR Unit Parameters (Natural Gas)

Firing Rate	= MMBtu/hr	=	140
Exhaust Flow	= scfh	=	1,784,007
Operating Schedule	= hours per year (hr/yr)	=	8,760
Total Uncontrolled NOx	= tpy Nox (based on proposed burners)	=	15.33
Total Controlled NOx	= tpy NOx (controlled to 0.01 lb/mmbtu)	=	6.13
Total NOx Removal	= tpy NOx	=	9.20
Ammonia Requirement (19% aqueous)	= (9.2 tpy NOx)(2000 lb/ton)(17 lb NH3/46 lb NOx)(1.1)(19%) /8 lb/gal = gal/yr	=	178
Catalyst Volume	= scfh * (0.00042 ft^3/scf)=ft^3	=	749
Equipment Life	= years	=	15
Catalyst Life	= years	=	5
Interest Rate	= %	=	7%
Equipment Capital Recovery Factor	= $i*(1+i)^n/((1+i)^n-1)$	=	0.1098
Catalyst Capital Recovery Factor	= $i*(1+i)^n/((1+i)^n-1)$	=	0.2439

Total Capital Investment, $

Total Capital Investment, w/ Catalyst (TCI)[1]	=	=	$950,000
Catatlyst Replacement Cost:			
Catalyst Disposal	= 749 ft^3 * ($15/ft^3) * 0.2439	=	$2,741
Catalyst Cost	= (0.0264 * 1,784,007 scfh) + 37,200	=	$84,298
Total Catalyst Replacement Cost	= Disposal + Replacement	=	$87,039
Capital Investment w/o Catalyst (TCI)	= TCI - Total Catalyst Replacement Cost	=	$862,961

Total Annual Cost

Direct Costs ($/yr)

Variable			
Ammonia (19% aq)	= 177.6 gal NH3 * ($1.30/gal)	=	$63,940
Electricity	= N/A		
Dilution Steam NA	= N/A		
Semivariable			
Operating Labor	= (1.0 hr/8 hr shift) * ($25.60/hr) * 8760 hr/yr	=	$28,032
Supervisory Labor	= 0.15 * $28,032.00 (operating labor)	=	$4,205
Maintenance Labor and Materials	= (0.007 * 1,784,007 scfh) + 25,800	=	$38,288
	Total Direct Cost (1990 Dollars) =		$134,465

Inirect Costs ($/yr)

Property Taxes, Ins., Admin.	= (0.04) * (TCI)	=	$38,000
Capital Recovery (Equipment)	= 0.1098 * (TCI - catalyst replacement)	=	$94,748
Capital Recovery (Catalyst)	= 0.2439 * (Total catalyst replacement cost)	=	$21,228
	Total Indirect Cost (1990 Dollars) =		$153,976
	Total Annual Cost (1990 Dollars) =		$288,441

Cost Effectiveness

Uncontrolled NO_x Emissions	= tpy NOx	=	15.33
Controlled NO_x Emissions	= tpy NOx	=	6.13
NO_x Removed by SCR	= tpy NOx	=	9.20
Cost Effectiveness	**= $/ton NOx**	**=**	**$31,359**

Note (1) Total Capital Investment is installed cost based on ratio of previous vendor estimates for similar facilities to 140 MMBtu/hr heater capacity.