TITLE 14 HOUSING AND CONSTRUCTION
CHAPTER 7 BUILDING CODES GENERAL
PART 4 2009 NEW MEXICO EARTHEN BUILDING MATERIALS CODE

14.7.4.1 ISSUING AGENCY: Construction Industries Division of the Regulation and Licensing Department.
[14.7.4.1 NMAC - Rp, 14.7.4.1 NMAC, 1-28-11]

14.7.4.2 SCOPE: This rule applies to all earthen building materials contracting work performed in New Mexico on or after January 28, 2011, that is subject to the jurisdiction of CID, unless performed pursuant to a permit for which an application was received by CID before that date.
[14.7.4.2 NMAC - Rp, 14.7.4.2 NMAC, 1-28-11]

14.7.4.3 STATUTORY AUTHORITY: NMSA 1978 Section 60-13-9 and 60-13-44.
[14.7.4.3 NMAC - Rp, 14.7.4.3 NMAC, 1-28-11]

14.7.4.4 DURATION: Permanent.
[14.7.4.4 NMAC - Rp, 14.7.4.4 NMAC, 1-28-11]

14.7.4.5 EFFECTIVE DATE: January 28, 2011, unless a later date is cited at the end of a section.
[14.7.4.5 NMAC - Rp, 14.7.4.1 NMAC, 1-28-11]

14.7.4.6 OBJECTIVE: The purpose of this rule is to establish minimum standards for earthen building materials construction in New Mexico.
[14.7.4.6 NMAC - Rp, 14.7.4.1 NMAC, 1-28-11]

14.7.4.7 DEFINITIONS:

A. Amended soil means improving an unqualified soil to a qualified state with the addition of other soils or amendments.

B. Amendments means additive elements to soil, such as lime, portland cement, fly ash, etc. which are “dry-mixed” into the main soil body as a percentage of total weight to achieve stabilization.

C. Buttress means a projecting structure providing lateral support to a wall. The buttress shall be incorporated into the foundation and wall system. (Refer to figure 1 of the earthen building figures supplement).

D. CEB means compressed earth block.

E. Count Rumford fireplace means a fireplace with a typically square opening with coved sides and a shallow firebox depth of at least twelve (12) inches, but no shallower than one third (1/3) of the width of the firebox. The fireback is vertical and does not slant forward. The throat is located at least twelve (12) inches above the lintel and is a nozzle, rounded or streamlined so as to preserve laminar flow of the dilution air through the throat and with a cross-sectional area large enough to insure the elimination of all products of combustion.

F. Keyway means a groove on the vertical rammed earth wall surface for interlocking purposes. Refer to figure 3 of the earthen building figures supplement).

G. Lift means a course of rammed earth, placed within the forms, and then compacted.

H. Nailer means any material rammed into the wall that serves as an attachment device. Refer to figure 4 of the earthen building figures supplement).

I. Optimum moisture means sufficient water (generally no more than ten (10) percent) mixed into the soil to attain sufficient compaction.

J. psi means pounds per square inch.

K. Qualified soil means any soil, or mixture of soils, that attains 300 psi compression strength and attains 50 psi. modulus of rupture.

L. Rammed earth means qualified soil that is mechanically or manually consolidated to full compaction.

M. Round-cap nails means fasteners that include nails or screws in combination with caps of at least three-fourths (3/4) inches diameter or three-fourths (¾) inch square.

N. Stabilization, stabilized means qualified soils that pass the wet strength test under ASTM D1633-00 or contain a minimum of six (6) percent portland cement by weight. Stabilization is achieved through the use of amendments.

O. **Wet strength compression test** means an approved testing laboratory process in which a fully cured rammed earth cylinder is completely submerged in water a minimum of four hours according to ASTM D1633-00, then subjected to a compression test.
[14.7.4.7 NMAC - Rp, 14.7.4.7 NMAC, 1-28-11; A, 9-1-13]

14.7.4.8 EARTHEN BUILDING MATERIALS:

A. **General.** The provisions of this rule, 14.7.4 NMAC, shall control the design and construction of one- and two-family dwellings in which earthen building materials form the bearing wall system.

B. **Allowable wall heights for earthen structures.** All earthen structures whether adobe, burned adobe, compressed earth block, rammed earth or terrón, shall conform to table 1. For purposes of using table 1, height is defined as the distance from the top of the slab or top of stem wall to the underside of the bond beam.

Table 1 ALLOWABLE WALL HEIGHTS FOR EARTHEN STRUCTURES

Maximum Sds	Wall Thickness	Maximum Height	Maximum Sds	Wall Thickness	Maximum Height
.25	10	120”	.3	10	120”
	12	128		12	128
	14	144		14	144
	16	144		16	144
	18	144		18	144
	24	144		24	144
.35	10	120”	.4	10	120”
	12	128		12	128
	14	144		14	144
	16	144		16	144
	18	144		18	144
	24	144		24	144
.45	10	104”	.5	10	96”
	12	128		12	112
	14	144		14	136
	16	144		16	144
	18	144		18	144
	24	144		24	144
This table is based on two story maximum, one and two family residential with seismic soil site class D1.					

[14.7.4.8 NMAC - Rp, 14.7.4.8 NMAC, 1-28-11]

14.7.4.9 ADOBE CONSTRUCTION:

A. **General.** Adobe shall not be used in any building more than two (2) stories in height. The maximum height of every wall of adobe block without lateral support is specified in 14.7.4.8 NMAC, table 1. The height of the wall is defined as the distance from the top of the slab or top of stem wall to the underside of the bond beam. The maximum height of exterior walls, which are laterally supported with those supports located no more than twenty-four (24) feet apart, are as defined in 14.7.4.8 NMAC, table 1. The bottom story of a two-story is allowed a minimum thickness of fourteen (14) inches with the upper story allowed a thickness of ten (10) inches providing the structure meets the provisions of 14.7.4.8 NMAC, table 1.

B. **Fireplaces.** Adobe or masonry fireplaces and chimneys in adobe structures shall comply with 14.7.3.18 NMAC. They shall be integrated into adjacent adobe walls during construction or secured to them by suitable steel ladder reinforcement or reinforcing rods.

C. **Count Rumford fireplaces.** Count Rumford fireplaces are allowed as provided in 14.7.3.18 NMAC.

D. **Soil.** Soil for use in adobe blocks should have a mixture of coarse sand, sand, silt and clay, naturally occurring, or amended with sand or straw, that will make a sun-dried brick without serious warping or cracking. The best way to determine the fitness of a soil is to make sample blocks and allow them to cure in the open, protected from moisture. Then test as specified by Subsections C and D of 14.7.4.11 NMAC. The soil shall not contain more than two (2) percent soluble salts.

E. Passive solar structures. Passive solar structures incorporating the use of solar mass walls (trombes), direct gain arrays or sunspaces (greenhouses) as defined by the passive solar heating worksheet, dated June, 2004 and prepared by the state of New Mexico energy, minerals and natural resources department, are allowed.
[14.7.4.9 NMAC - Rp, 14.7.4.9 NMAC, 1-28-11]

14.7.4.10 CLASSES OF ADOBE:

A. Stabilized adobe. The term "stabilized" is defined to mean water-resistant adobe made of soil to which certain admixtures are added in the manufacturing process in order to limit water absorption into the adobe. Exterior walls constructed of stabilized mortar and adobe requires no additional protection. Cement stucco or other waterproof coating is not required. The test required is that a dried four (4) inch cube cut from a sample unit shall not gain more than 2.5% in weight when placed upon a constantly water-saturated porous surface for seven (7) days. An adobe unit that meets this specification shall be considered "stabilized."

B. Unstabilized adobe. Unstabilized or "natural" adobes are adobes that do not meet the water absorption specifications indicated in Subsection A of 14.7.4.10 NMAC above. Use of unstabilized adobes is prohibited within four (4) inches of the finished floor grade. Stabilized adobe or waterproof masonry units and mortar may be used for the first four (4) inches above floor grade.

C. Terrón. The term "Terrón" shall refer to a cut sod brick. Their use is permitted if units are dry and the wall design is in conformance with this code.

D. Burned adobe. The term "burned adobe" shall refer to mud adobe bricks that have been cured by low-temperature kiln firing. This type of adobe is not generally dense enough to be "frostproof" and may deteriorate with seasonal freeze-thaw cycles. Its use for exterior locations is discouraged in climate zones with daily freeze-thaw cycles.
[14.7.4.10 NMAC - Rp, 14.7.4.10 NMAC, 1-28-11]

14.7.4.11 PROPERTIES, SAMPLING AND TESTING:

A. General. Each of the tests prescribed in this section shall be applied to sample units selected at random at a ratio of five (5) units per twenty-five thousand (25,000) bricks to be used or at the discretion of the building official.

B. Shrinkage cracks. Shrinkage cracks are allowed, providing that these cracks do not jeopardize the structural integrity of the blocks.

C. Compressive strength.

(1) Cured units shall have an average minimum compressive strength of three hundred (300) pounds per square inch when tested. One (1) sample out of five (5) may have a compressive strength of not less than two hundred fifty (250) psi.

(2) The adobe block shall be tested in the flat position. The length of the test unit must be a minimum of twice the width. The surfaces must be smooth. The test unit shall be subjected to a uniform compressive load that is gradually increased at a rate of five hundred (500) psi./minute until failure occurs. A true platen should be used in the testing machine, along with swivel head to accommodate nonparallel bearing surfaces. The compressive strength is defined as P/A, where P= load and A = area of compression surface.

D. Modulus of rupture. Cured units shall average fifty (50) psi in modulus of rupture when tested according to the following procedures. A cured unit shall be laid over two-inch (2") diameter cylindrical supports two (2) inches from each end and extending across the full width of the unit. A cylinder two (2) inches in diameter shall be laid midway between and parallel to the supports. Load shall be applied to the cylinder at a rate of five hundred (500) psi/minute until rupture occurs. The modulus of rupture is equal to: 3PL/2bt2 (P=rupture load in pounds, L=span between supports, b=width of block, t=thickness of block) .

E. Mortar. The use of earth mortar is allowed if the earth mortar material is of the same type as the adobe blocks. Conventional lime/sand/cement mortars of types M, S, and N are also allowed. Mortar "bedding" joints shall be fully grouted, with partially open "head" joints allowable if the surface is to be plastered. All joints shall be lapped at least twenty-five (25) percent of the visible block length.

F. Use. No adobe shall be laid in the wall until fully cured. Adobes shall be laid in level courses so that the top of any course shall be at the same height above the stem around the structure.

G. Foundations. Adobes may not be used for foundations or basement walls. All adobe walls, except as noted, shall have a continuous footing at least eight (8) inches thick and not less than two (2) inches wider on each side that supports the foundation stem walls above. All foundation stem walls that support adobe units shall extend to an elevation not less than six (6) inches above the finish grade. Foundation stem walls shall be at least as

thick as the adobe walls they support. Where perimeter insulation is used, a variance is allowed for the stem wall width to be two (2) inches narrower than the width of the adobe wall it supports. Alternative foundation systems must be approved by the building official.

H. Bond beams. All bearing walls shall be topped with a continuous bond beam (except patio walls less than six (6) feet high above stem). All bond beam construction shall be in accordance with accepted engineering practices.

I. Concrete bond beam. Concrete bond beams shall be a minimum of six (6) inches high by ten (10) inches wide for walls up to fourteen (14) inches thick. Where adobe walls are wider than one course, two-thirds (2/3) of each visible course top shall be covered by the concrete bond beam. All concrete bond beams shall be reinforced with a minimum of two (2) no. 4 reinforcing rods at each floor and ceiling plate line.

J. Wood bond beam. Wood bond beams shall be a minimum of six (6) inches deep by ten (10) inches wide for walls up to fourteen (14) inches thick. Where adobe walls are wider than one course, two-thirds (2/3) of each visible course top shall be covered by a wood bond beam and the roof load shall be distributed over both bond beams. Wood bond beams may be solid in the six-inch (6”) dimension, or may be built up by applying layers of lumber. Ends of wood bond beams are to be lapped a minimum of the width of the wall and fully nailed. No wood layer shall be less than one (1) inch nominal thickness. The building official shall approve all wooden bond beams for walls wider than fourteen (14) inches.

K. Lintels. Lintels of wood or concrete are allowed. When an engineer’s drawing and seal is not provided, all lintels shall conform to table 2 or 3 below. The required bearing of any lintel shall not be reduced by a splayed or angled window or door opening.

L. Wood lintels. When an engineer’s drawing and seal is not provided for lintels, all wood lintels shall conform to table 2 and have a fiber stress rating of at least 850 psi.

Table 2 ADOBE WALL WOOD LINTEL SCHEDULE				
				MINIMUM FIBER STRESS 850 psi
Wall Width	**Max. Span**	**Size**	**Bearing length on earth wall**	**Load Capacity**
10”	4'-0”	10” x 6”	12”	860 PLF
	6'-0”	10” x 8”	12”	1020 PLF
	8'-0”	10” x 10”	18”	1150 PLF
	10'-0”	10” x 12”	24”	1000 PLF
	12'-0”	10” x 14”	24”	1000 PLF
12”	4'-0”	10” x 6”	12”	860 PLF
	6'-0”	10” x 8”	12”	1020 PLF
	8'-0”	10” x 10”	18”	1150 PLF
	10'-0”	10” x 12”	24”	1000 PLF
	12'-0”	10” x 14”	24”	1000 PLF
14”	4'-0”	12” x 6”	12”	950 PLF
	6'-0”	12” x 8”	12”	1150 PLF
	8'-0”	12” x 10”	18”	1300 PLF
	10'-0”	12” x 12”	24”	1300 PLF
	12'-0”	12” x 14”	24”	1200 PLF

M. Concrete lintels. When an engineer’s drawing and seal is not provided for lintels, all concrete lintels shall conform to table 3 and have a minimum strength of 3000 psi.

Table 3	**ADOBE WALL CONCRETE LINTEL SCHEDULE**			**MIN. 3000 psi**
Maximum Span	**Minimum depth***	**Reinforcing**	**Maximum Capacity per linear foot**	**Bearing length on earth wall**
Less than 6’ - 0”	8”	2 - # 4	1500 lbs.	12”
6' - 0" to 10'- 0”	12”	3 - # 5	1500 lbs.	18”
11' - 0" to 16'- 0”	16”	3 - # 6	1500 lbs.	24”
* SIZE Wall width X depth of lintel				

N. **Anchorage.** Roof and floor structures will be suitably anchored to bond beams. Wood joists, vigas or beams shall be attached to the wood or concrete bond beams with adequate metal fasteners. Door and window bucks shall be secured to the adobe wall with adequate metal fasteners. "Gringo blocks" or wood nailers, placed in the adobe walls as they are laid up, are allowed. Wood and metal partitions may be secured to nailing blocks laid up in the adobe wall or by other approved methods.

O. **Plastering.** Add the following new provisions.

(1) Portland-based plasters or lime-based stuccos used over insulation board or foam shall follow 14.7.4.11 P NMAC.

(2) Unstabilized, uninsulated exterior adobe walls can be protected with plasters or stuccos with a minimum thickness of seven-eighths (7/8) inch, if adequate roof, parapet, canal, and window flashing is provided.

(3) Portland-based plaster covering unstabilized, adobe walls must be reinforced with self-furring metal wire mesh, minimum seventeen (17) gauge by one-and-a-half (1 1/2) inch openings, securely attached to the exterior adobe wall surface by nails or staples with a minimum penetration of one-and-a-half (1 ½) inches. Such mesh fasteners shall have a maximum spacing sixteen (16) inches from each other. Wood surfaces or areas of dissimilar materials to be covered with Portland-based plaster must be protected from moisture with asphalt felt, covered with expanded metal lath, securely attached to the adobe wall.

(4) Type S hydrated lime stuccos covering unstabilized adobe walls are allowed providing that adobe head joints are left partially open as provided by 14.7.4.11 E NMAC. Lime-based stuccos do not require a wire mesh cover except when used over wood or dissimilar materials in which case the surface must be protected from moisture with asphalt felt, covered with expanded metal lath.

(5) Other plasters or coatings are allowed providing they do not constitute a vapor barrier. Interior gypsum or mud plasters may be applied directly to the wall, provided that adobe head joints have been left partially open. Expanded metal lath shall be used around window and door openings. If desired, exterior adobe walls may be protected with mud plaster. Alternative plastering or coating systems shall be submitted for approval by the building official.

P. **Wall insulation.** Add the following new provisions.

(1) Insulating boards or foams not exceeding two (2) inches in thickness may be adhered to the exterior of the adobe wall. When insulation board is used, round-cap nails shall attach it to the adobe wall, with nails placed to avoid bed joints between courses. Cap nails shall have a maximum spacing of sixteen (16) inches from each other. Additionally, cap nails shall secure the rigid insulation boards around their perimeter edges, with nails spaced no less than twelve (12) inches apart. All cap nails shall penetrate a minimum of two (2) inches into the adobe wall. Insulating boards or foams shall not be used to form architectural shapes exceeding two (2) inches in thickness.

(2) Insulations exceeding two (2) inches in thickness may be used providing they do not form a vapor barrier. Their weight shall be supported by the stem wall below and contained within vertical furring strips, securely attached to the adobe wall. A sectional, scaled drawing for the proposed insulation scheme must be submitted for review by the building official.

Q. **Parapets.** Add the following new provisions.

(1) **Plastered parapets**, whether of adobe or frame construction, shall require a seamless but permeable waterproof cover or weather barrier, capping the entire parapet and wrapping over each side. The cover shall extend past the bond beam a minimum of four (4) inches on the wall side. On the roof side, the cover shall properly lap any rising roof felts or membranes and be properly sealed. A layer of expanded metal lath shall be installed over the cover before plaster or stucco is applied. The lath shall extend past the bond beam on the wall side a minimum of five (5) inches and on the roof side, the same distance as the cover below, allowing for plaster stops or seals. No penetrating fasteners are allowed on the horizontal surface of parapets.

(2) **Exposed parapets** of adobe shall be laid in level courses of fully stabilized block and mortar. Bed and head joints shall be fully grouted and tightly tooled. Bedding joints at bond beams and around vents and canales shall be fully grouted and tightly tooled. The horizontal top of exposed adobe parapets shall be covered with a minimum three-fourths (3/4) inch layer of fully stabilized mortar, troweled to conform with the parapet. Waterproof sealers are allowed, providing they are permeable. Other parapet covers, such as flagstone, Spanish mission tile or cement mortar are allowed providing they are securely attached to the parapet. A scaled, sectional drawing shall be provided to the building official showing the attachment scheme.

[14.7.4.11 NMAC - Rp, 14.7.4.11 NMAC, 1-28-11]

14.7.4.12 RAMMED EARTH CONSTRUCTION:

A. **General.** The following provisions shall apply.

(1) Rammed earth shall not be used in any building more than (2) stories in height. The height of every wall of rammed earth without lateral support is specified in 14.7.4.8 NMAC table 1. The height of the wall is defined as the distance from the top of the slab or top of stem wall to the underside of the bond beam.

(2) Exterior rammed earth walls shall be a minimum of eighteen (18) inches in thickness. Exception: Exterior walls that are also designed as solar mass walls (trombe) as defined by the passive solar heating worksheet, dated June 2004 and prepared by the state of New Mexico energy, minerals and natural resources department, are allowed and shall be minimum thickness of ten (10) inches, not to exceed twelve (12) inches. They shall be fully attached to or integrated with any adjacent structural wall and topped with a bond beam that fully attaches them to the bond beam of any adjacent structural wall as described in 14.7.4.17 NMAC.

(3) Interior rammed earth walls shall be a minimum of twelve (12) inches in thickness.

(4) The first lift of rammed earth walls shall be of stabilized rammed earth or minimum 2500 psi concrete, rising not less than three and one half (3 ½) inches above finish floor level. Unstabilized rammed earth walls must be covered to prevent infiltration of moisture from the top of the wall at the end of each workday and prior to wet weather conditions, whether the walls are contained within forms or not.

(5) Fully stabilized rammed earth walls may be left unprotected from the elements.

(6) In no case shall a rammed earth wall be reduced in thickness with back to back channels or nailers. Channels or nailers rammed on both sides of a running wall shall not be opposite each other to avoid an hourglass configuration in the wall section. Channels or nailers on both sides of a running wall shall be separated from each other vertically at a distance no less than the rammed earth wall thickness. (Refer to figure 4 of the earthen building figures supplement).

(7) An architect or engineer registered in the state of New Mexico shall design and seal structural portions of two-story residential rammed earth construction documents.

(8) The general construction of the building shall comply with all provisions of the 2009 New Mexico Residential Building Code (NMRBC), unless otherwise provided for in this rule.

(9) Passive solar structures incorporating the use of solar mass walls (trombe), direct gain arrays or sunspaces (greenhouses) as defined by the passive solar heating worksheet, dated June 2004 and prepared by the state of New Mexico energy, minerals and natural resources department, are allowed.

B. Fireplaces. Adobe or masonry fireplaces and chimneys in rammed earth structures shall comply with 14.7.3.18 NMAC. They shall be integrated into adjacent rammed earth walls during construction or secured to them by suitable steel ladder reinforcement or reinforcing rods.

C. Count Rumford fireplaces. Count Rumford fireplaces are allowed as provided in 14.7.3.18 NMAC.

D. Stop work. The building inspector shall have the authority to issue a “stop work” order if the provisions of this section are not complied with.

E. Lateral support. Lateral support shall occur at intervals not to exceed twenty-four (24) feet. Rammed earth walls eighteen (18) inches to less than twenty-four (24) inches thick shall be laterally supported with any one or combination of the following: A rammed earth wall of bond beam height that intersects the running wall with at least sixty (60) degrees of support (refer to a figure 5 of the earthen building figures supplement); an adobe wall of bond beam height and at least ten (10) inches in width that intersects with and attaches to the running wall with at least sixty (60) degrees of support (refer to figure 5 of the earthen building figures supplement); a minimum twenty 20 gauge steel frame or wood frame wall of full height that intersects with and attaches to the running wall with ninety (90) degrees of support, that is properly cross-braced or sheathed (refer to figure 6 of the earthen building figures supplement); a buttress configuration that intersects the running wall at ninety (90) degrees, of adobe or rammed earth. The buttress base must project a minimum of three (3) feet (or thirty-three (33) percent of the wall height) from the running wall and support at least seventy-five (75) percent of the total wall height (refer to figure 7 of the earthen building figures supplement). The thickness of a rammed earth buttress shall be at least eighteen (18) inches. The thickness of an adobe buttress shall be a minimum fourteen (14) inches. Rammed earth walls greater than twenty-four (24) inches in thickness are self-buttressing and do not require lateral support provided their design adheres to 14.7.4.8 NMAC table 1 and the other applicable provisions of this rule.

F. Openings. Door and window openings shall be designed such that the opening shall not be any closer to an outside corner of the structure as follows.

(1) In rammed earth walls eighteen (18) inches to less than twenty-four (24) inches thick, openings shall not be located within three (3) feet of any corner of the structure. (Refer to figure 8 of the earthen building figures supplement). Exception: Openings may be located within three (3) feet of any corner provided a buttress extending at least three (3) feet from the structure supports the corner. A continuous footing below and a continuous bond beam above, shall be provided across such openings.

(2) Rammed earth walls greater than twenty-four (24) inches thick are self-buttressing, with no special consideration for placement of openings within the area of the wall.

G. Piers. Rammed earth piers supporting openings shall measure no less than three (3) square feet in area and no dimension shall be less than eighteen (18) inches. (Refer to figures 9-A and 9-B of the earthen building figures supplement).

[14.7.4.12 NMAC - Rp, 14.7.4.12 NMAC, 1-28-11; A, 9-1-13]

14.7.4.13 FOUNDATIONS:

A. General. Foundation construction shall comply with applicable provisions of the 2009 New Mexico Residential Building Code, and the following: a minimum of three (3) continuous #4 reinforcing rods are required in concrete footings supporting rammed earth walls. Footings shall be a minimum of ten 10 inches in thickness. Concrete footings and concrete stem walls supporting rammed earth walls shall be a minimum of 2500 psi. Stem walls shall be the full width of the wall supported above or wider to receive forming systems. Stem walls shall rise above exterior grade a minimum of six (6) inches.

B. Perimeter insulation. For the purposes of placement of perimeter insulation, rammed earth walls may overhang the bearing surface up to the thickness of the perimeter insulation, but in no case greater than two (2) inches.

C. Keyway. A key way shall be provided where the rammed earth wall meets the foundation system. The keyway shall be established at the top of the stem a minimum of two (2) inches deep by six (6) inches wide formed at the time of the pour, and shall run continuously around the structure to include any intersecting rammed earth wall sections. The rammed earth wall shall be fully rammed into this keyway (refer to figure 2 of the earthen building figures supplement). Exception: Placement of vertical reinforcing rods extending a minimum twelve (12) inches into the rammed earth wall. The vertical rods shall be minimum #4, imbedded into the concrete and spaced forty-eighty (48) inches on center, maximum.

D. Concrete grade beam. Rubble filled foundation trench designs with a reinforced concrete grade beam above are allowed to support rammed earth wall construction. An architect or engineer registered in the state of New Mexico shall certify the grade beam/rubble-filled trench design portion.

[14.7.4.13 NMAC - Rp, 14.7.4.13 NMAC, 1-28-11; A, 9-1-13]

14.7.4.14 RAMMED EARTH SOIL SPECIFICATIONS:

A. General. The soil shall not contain rock more than one-and-a-half (1 1/2) inch in diameter. The soil shall not contain clay lumps more than one-half (1/2) inch in diameter. The soil shall be free of all organic matter. The soil shall not contain more than two (2) percent soluble salts.

B. Soil compressive strength. Prior to the start of construction, fully-cured rammed earth soil samples shall be tested at an approved testing laboratory for compressive strength. The ultimate compressive strength of all rammed earth soil, stabilized or non-stabilized, shall be a minimum three-hundred (300) psi. The compressive strength report shall be submitted with the permit application. This report may be waived if the builder provides certification of compliance. The certification must be dated within one year of the date on the application for the building permit. Samples tested shall be representative of soil to be used on the project for which the permit application is submitted.

C. Stabilized rammed earth soil. The following shall apply to stabilization of rammed earth soil: Asphalt emulsion may not be used for stabilization of rammed earth soil. Thorough mixing of additives to the soil may be achieved by any method that assures a complete blending to a uniform color and texture. Stabilized soil is suitable soil that contains six (6) percent or more portland cement by weight or that passes ASTM D1633-00. Samples tested shall be representative of soil to be used on the project for which the permit application is submitted. The compressive strength report shall be submitted with the permit application. Laboratory testing shall indicate rammed earth samples attained a minimum of two-hundred (200) psi. after seven (7) days. If a different soil is provided at any time during construction, it must meet the minimum requirements outlined above, prior to use in the structure.

D. Unstabilized rammed earth soil. Unstabilized rammed earth soil is that containing less than six (6) percent portland cement by weight or that fails to pass ASTM D1633-00. The exterior of such walls shall be protected with approved stucco systems or other method approved by the building official. Refer to 14.7.4.19 NMAC for weather-resistive barrier requirements.

E. Amended soil. The following guidelines shall apply when amending soils to attain a qualified soil. Soil shall not contain rock greater than one-and-a-half (1 1/2) inch in diameter. Soil shall not contain clay lumps greater than one-half (1/2) inch diameter. Soil shall be free of organic matter. Soil shall not contain more

than two (2) percent soluble salts. Soils to be mixed shall be sufficiently dry to blend completely to one uniform color and texture. The amended soil shall be tested prior to use as per Subsection B of 14.7.4.14 NMAC.

F. Forming systems. The forming system shall be adequate to contain the material under compaction. It shall be properly plumbed and braced to withstand the soil pressures as well as construction activity on and around it.

G. Placement of material, compaction and curing.

(1) No amount of portland cement stabilized soil will be mixed that will not be placed in the wall system within sixty (60) minutes of its preparation.

(2) Lifts of prepared soil shall be placed in the forms in relatively even layers not to exceed 8 inches in depth. Each lift shall then be rammed to full compaction.

(3) Optimum moisture content as determined to meet minimum compressive strength shall be maintained for stabilized and unstabilized walls.

(4) Work will progress, lift-by-lift, until the work approaches bond beam height.

(5) Forms may be stripped immediately after ramming is completed for a section of wall, providing ramming of adjacent sections does not affect the structural integrity of completed walls.

(6) Portland cement stabilized walls not in forms shall be lightly spray-cured with water at least five (5) spaced times during daylight hours. This procedure shall continue for at least three (3) days starting from the time that the wall is exposed to the elements. Exception: Rammed earth walls left in forms three (3) or more days shall not require water-spray curing.

H. Placement of attachment materials.

(1) Nailers: Nailers incorporated into the rammed earth wall shall be installed as follows (Refer to figure 4 of the earthen building figures supplement); the rammed earth wall shall not be reduced in thickness with back-to-back nailers. To avoid an hourglass configuration in the wall section, nailers on either side of a running wall shall not be opposite each other. Nailers on either side of a running wall shall be separated from each other vertically a distance not less than the rammed earth wall thickness. Nailers shall be placed onto the wall such that the narrow dimension of the nailer is exposed on the race of the wall prior to ramming. Nailers shall be cured and sealed against moisture penetration prior to installation in forms. The nailers shall not extend the full depth of the wall. Box wood nailers are not allowed. (Refer to figure 11 of the earthen building figures supplement). The nailer shall be no more than two (2) inches by four (4) inches by its length.

(2) Channels: Channels may be incorporated into the rammed earth wall as follows (Refer to figure 2 of the earthen building figures supplement); To avoid an hourglass configuration in the wall section, channels on either side of a running wall shall not be opposite each other. (Refer to figure 4 of the earthen building figures supplement). Channels shall be no more than two (2) inches by four (4) inches by their length in dimension. Vertical channels shall not be placed closer than twelve (12) inches to a rammed earth wall finished edge or corner.
[14.7.4.14 NMAC - Rp, 14.7.4.14 NMAC, 1-28-11]

14.7.4.15 NICHOS OR OTHER SHAPED VOIDS:

A. General. The depth of voids shall not exceed 8 inches. The width of the void shall be as defined in Subsections B and C of 14.7.4.15 NMAC below.

B. Voids in stabilized rammed earth walls. Voids shall not exceed two (2) feet in width. Voids greater than two (2) feet in width require a lintel or half-circle arched opening. Refer to 14.7.4.18 NMAC for lintel requirements.

C. Voids in unstabilized rammed earth walls. Voids shall not exceed one (1) foot in width. Voids greater than one (1) foot in width require a lintel or half-circle arched opening of stabilized rammed earth material. Refer to 14.7.4.18 NMAC for lintel requirements.
[14.7.4.15 NMAC - Rp, 14.7.4.15 NMAC, 1-28-11]

14.7.4.16 ATTACHMENTS AND CONNECTIONS:

A. General. Attachment and connection methods of alternate wall construction to rammed earth walls are described as follows. The building official may approve other attachment and connection methods. In no case shall two wall types be butted to each other without consideration for attachment or connection.

B. Attachment of a rammed earth wall to a rammed earth wall. A keyway, at least six (6) inches wide by three (3) inches deep shall be formed vertically at the center of the wall section from stem top to underside of bond beam. The connecting wall shall be rammed into the keyway. (Refer to figure 3 of the earthen building figures supplement).

C. Attachment of a load-bearing adobe wall to a rammed earth wall. Where adobe is deployed as an interior wall that will be incorporated into the rammed earth wall for lateral support, the adobe shall measure a minimum of ten (10) inches in thickness. Steel ladder reinforcement shall be rammed into the wall at the intersection with the adobe wall. The reinforcement may be bent against the forms during the ramming process. After ramming is complete and forms removed, the reinforcement shall be incorporated into the adjoining adobe coursing, every four (4) courses minimum. (Refer to figure 12 of the earthen building figures supplement). As an alternative, a keyway, not to exceed the depth of the adobe wall, nor one-third (1/3) the depth of the rammed earth wall, shall be formed into the rammed earth wall. The adobe shall be incorporated into the keyway. (Refer to figure 13 of the earthen building figures supplement).

D. Attachment of a loadbearing wood or steel frame wall to a rammed earth wall. A half-inch (1/2) minimum diameter anchor bolt with four (4) inch hook, set in a linear vertical pattern, a maximum of twenty-four (24) inches on-center. The anchor bolt shall be embedded at least twelve (12) inches into the earth wall with the threaded end protruding sufficiently to pass through and attach the adjoining vertical wall stud. The washer and nut shall be tightened just prior to sheathing the frame wall. As an alternative, eighteen (18) gauge by two (2) inch minimum galvanized strap tie, grouted into the concrete bond beam (or secured to the wood bond beam or wood top plate), securely nailed to the top plate of the frame wall. The remainder of the vertical stud shall be attached to the rammed earth wall with thirty-D (30D) nails or screws embedded a minimum of three (3) inches into the adjacent wall at eight (8) inches on center vertically. (Refer to figure 14 of the earthen building figures supplement).

E. Attachment of a door or window unit to a rammed earth wall. The unit shall be attached to nailers within the opening or nailed or screwed directly into the rammed earth wall. The nail or screw shall penetrate at least three (3) inches into the rammed earth wall. Heavier units may utilize stronger attachments, such as anchor bolts, T-bolts, steel pins, etc., embedded into the rammed earth wall.

F. Attachment of foam or rigid insulation to a rammed earth wall. Insulating boards or foams not exceeding two (2) inches in thickness may be adhered to the exterior of the rammed earth wall. When insulation board is used, round-cap nails, capped concrete nails or capped screws shall attach it to the rammed earth wall. Cap nails or screws shall have a maximum spacing of sixteen (16) inches from each other. Additionally, cap nails or screws shall secure the insulation boards around their perimeter edges with nails or screws spaced no less than twelve (12) inches apart. All cap nails or screws shall penetrate a minimum of two (2) inches into the rammed earth wall. All insulation fasteners shall be corrosion resistant. Insulating boards or foams shall not be used to form architectural shapes exceeding two (2) inches in thickness.

G. Attachment of cabinetry to a rammed earth wall. Deck screws shall penetrate a minimum of three (3) inches through cabinetry and into a nailer, eight (8) inches on center maximum, or; deck screws with a least three (3) inch minimum penetration through cabinetry and into the rammed earth wall. Screws shall be placed horizontally, eight (8) inches on center maximum, on the top and bottom of cabinetry. As an alternative, all-thread rods or other attachment devices, suitable for attachment of cabinetry through the rammed earth wall.

H. Attachment of concrete bond beam to a rammed earth wall. Number four (4) reinforcing bar shall be driven into the uncured wall top. The reinforcing bar shall be set at a maximum twenty degree angle along both edges of the wall, staggered no more than twenty-four (24) inches on-center and no closer than four (4) inches from the exterior faces of the wall. The reinforcing bar shall extend a minimum of twelve (12) inches into the rammed earth wall and four (4) inches into the concrete bond beam. (Refer to figure 16 of the earthen building figures supplement).

I. Attachment of wood bond beam to a rammed earth wall. One-half (1/2) inch anchor bolts with four (4) inch base hooks shall be rammed into the wall. The bolts shall be staggered a maximum of forty-eight (48) inches on-center along both edges of the wall, staggered no closer than six (6) inches from the exterior faces of the wall. The bolt shall extend a minimum of eighteen (18) inches into the rammed earth wall.
[14.7.4.16 NMAC - Rp, 14.7.4.16 NMAC, 1-28-11; A, 9-1-13]

14.7.4.17 BOND BEAMS:

A. General. The bond beam shall be secured to the rammed earth wall. Refer to Subsections H and I of 14.7.4.16 NMAC above. Bond beams may be of wood or concrete construction. Bond beams shall measure six (6) inches nominal depth and extend the full width of the wall. Exception: The bond beam width may be reduced as follows: Two (2) inches maximum in an eighteen (18) to less than twenty-four (24) inch thick rammed earth wall, or three (3) inches maximum in a rammed earth wall twenty-four (24) inches or greater in thickness. Bond beams must be continuous, running the full perimeter of the structure. Interior rammed earth or adobe walls shall be incorporated into the bond beam. Varying height bond beams shall extend into the adjoining rammed earth wall

one-half (1/2) the thickness of the adjoining rammed earth wall. The concrete bond beam may secure anchoring and strapping devices.

B. Wood bond beam construction. In addition to the general requirements of Subsection A of 14.7.4.17 NMAC, wood bond beams may be constructed as approved by the building official. Light wood bond beam construction may be utilized as shown in figure 10 of the earthen building figures supplement.

C. Concrete bond beam construction. In addition to the general requirements of Subsection A of 14.7.4.17 NMAC, concrete bond beams shall be constructed of minimum twenty-five hundred (2500) psi. concrete and shall contain steel reinforcement as follows: For eighteen (18) to less than twenty-four (24) inch thick rammed earth wall construction, a minimum of two (2) continuous number four (4) reinforcing rods shall be used. For walls equal to or greater than twenty-four (24) inches in thickness, a minimum of two (2) continuous number five (5) reinforcing rods shall be used. Provide two (2) inch minimum reinforcement concrete cover over all horizontal reinforcing rods. Concrete bond beams may be used to secure anchoring and strapping devices.

D. Concrete bond beam cold joints. Concrete bond beam cold joints are limited to corners of perpendicular intersections with other structural, full-height walls. Cold joints shall be tied into the adjoining bond beam with three (3) number four (4) reinforcing rods. The reinforcement shall extend a minimum of twenty-four (24) inches into both portions of the concrete bond beam.

[14.7.4.17 NMAC - Rp, 14.7.4.17 NMAC, 1-28-11]

14.7.4.18 LINTELS OVER OPENINGS:

A. General. All openings require a lintel or semi-circular arch over the opening. All lintels, whether of wood or concrete shall bear a minimum of twelve (12) inches into the length of the wall. Exception: Nichos and other shaped voids as defined in 14.7.4.15 NMAC.

B. Bearing limitations. Lintels shall bear a minimum of twelve (12) inches beyond coved, splayed or rounded bearing portions of openings that are less than the full width of the wall. (Refer to figure 15 of the earthen building figures supplement).

C. Lintels over openings in stabilized rammed earth walls. Openings less than twenty-four (24) inches in width shall not require a lintel or semi-circular arched opening. Openings greater than twenty-four (24) inches in width require lintels as defined in table 4.

Table 4 Concrete Lintels Over Openings in Rammed Earth Walls (1)

Wall width	Lintel span	Lintel depth	Reinforcement (2)	Reinforcement Concrete Cover (3)	Uniform Load
18”	24”	6”	3- #4 @ 4”o.c.	3” minimum concrete cover on all sides	1000 PLF
	36”	6”	3- #4 @ 4”o.c.		
	48”	6”	3- #4 @ 4”o.c.		
	60”	6”	3- #4 @ 4”o.c.		
	72”	8”	3- #5 @ 4”o.c.		
	84”	8”	3- #5 @ 4”o.c.		
	96”	8”	3- #5 @ 4”o.c.		
20”	24”	6”	3- #4 @ 4”o.c.	4” minimum concrete cover on all sides	1350 PLF
	36”	6”	3- #4 @ 4”o.c.		
	48”	6”	3- #4 @ 4”o.c.		
	60”	6”	3- #4 @ 4”o.c.		
	72”	8”	3- #5 @ 4”o.c.		
	84”	8”	3- #5 @ 4”o.c.		
	96”	10”	3- #5 @ 4”o.c.		
22”	24”	6”	3- #4 @ 5”o.c.	3 1/2” minimum concrete cover on all sides	1700 PLF
	36”	6”	3- #4 @ 5”o.c.		
	48”	6”	3- #4 @ 5”o.c.		
	60”	6”	3- #4 @ 5”o.c.		
	72”	8”	3- #5 @ 5”o.c.		
	84”	10”	3- #5 @ 5”o.c.		
	96”	10”	3- #5 @ 5”o.c.		
	24”	6”	3- #4 @ 6”o.c.		
	36”	6”	3- #4 @ 6”o.c.		

24”	48”	6”	3- #4 @ 6”o.c.	3” minimum concrete cover on all sides	2000 PLF
	60”	6”	3- #4 @ 6”o.c.		
	72”	8”	3- #5 @ 6”o.c.		
	84”	10”	3- #5 @ 6”o.c.		
	96”	12”	3- #5 @ 6”o.c.		
1. 3000 psi minimum concrete at approximately 28 days. 2. Grade 40 steel reinforcement minimum. 3. Steel reinforcement at mid-depth of lintel.					

[14.7.4.18 NMAC - Rp, 14.7.4.18 NMAC, 1-28-11]

14.7.4.19 WEATHER RESISTIVE BARRIERS:

A. General. Stabilized rammed earth walls do not require a weather-resistive barrier or an approved exterior finish. Unstabilized rammed earth walls require a weather-resistive barrier and approved exterior finish. When a vapor barrier is installed over the rammed earth wall, it shall not be installed on both sides of a rammed earth wall system. Exception: On the top and sides of a parapet wall.

B. Moisture barrier locations. A moisture barrier shall protect rammed earth walls adjacent to bath and shower enclosures. A moisture barrier shall protect rammed earth walls at window sills, the top of the parapet, or other exterior wall portions exposed to the elements. A moisture barrier installed over an exposed parapet top of a rammed earth wall shall lap a minimum of six (6) inches down both sides of the parapet top.

[14.7.4.19 NMAC - Rp, 14.7.4.19 NMAC, 1-28-11]

14.7.4.20 LATH AND PLASTER:

A. General. When non-cementious plasters are applied directly to the rammed earth wall surface, the surface shall be scored or sandblasted prior to the application of the plaster. Rammed earth walls must cure to a depth of four (4) inches minimum prior to application of an approved exterior finish.

B. Lath. Where rammed earth walls have a plaster finish, metal lath shall be installed around interior and exterior wall openings and over dissimilar materials.

C. Exterior plaster. In unstabilized rammed earth walls, stucco netting shall be installed and cementious plaster shall have a minimum seven-eighths (7/8) inch finished thickness, unless an elastomeric “color coat” is used, then it shall have a minimum base coat of five-eighths (5/8) inch. Applications shall follow the material manufacturers’ specifications.

[14.7.4.20 NMAC - Rp, 14.7.4.20 NMAC, 1-28-11]

14.7.4.21 PLUMBING:

A. General. Code compliant plumbing systems may be rammed into the wall system, either vertically or horizontally, provided that such plumbing material is of sufficient strength to withstand the ramming pressures without any rupture or collapse.

B. Plumbing system installation. Installations shall not reduce the width of the rammed earth wall by more than one-third (1/3). Prior to ramming, a minimum five (5) inch earth cover is provided over any horizontal pipe.

[14.7.4.21 NMAC - Rp, 14.7.4.21 NMAC, 1-28-11]

14.7.4.22 ELECTRICAL:

A. Electrical system installation. Electrical wiring shall pass through a channel or conduit. Approved rigid or flexible electrical conduit shall withstand ramming pressures without damage or collapse. Electrical wiring within a channel shall be covered a minimum of one and one-fourth (1 1/4) inches. Prior to ramming, a minimum five (5) inch earth cover shall be provided over any horizontal pipe.

B. UF cable installation. UF cable may not be rammed within the rammed earth wall. Exception: UF cable installed within an approved conduit or channel. In a channel installation, UF cable must be covered a minimum of one-and-one-fourth (1 1/4) inches with plaster, adobe or similar finish.

C. Electrical box installation. Plastic electrical boxes shall not be rammed within the rammed earth wall. Exception: Plastic electrical boxes installed in a channel installation.

[14.7.4.22 NMAC - Rp, 14.7.4.22 NMAC, 1-28-11]

14.7.4.23 COMPRESSED EARTH BLOCK CONSTRUCTION (CEB):

A. General. Compressed earth block shall not be used in any building more than (2) stories in height. The height of every wall of compressed earth block without lateral support shall be defined in Subsection B of 14.7.4.8 NMAC, table 1. The height of the wall is defined as the distance from the top of the slab or top of stem wall to the underside of the bond beam. Heights for exterior walls, which are laterally supported with those supports located no more than twenty-four (24) feet apart, are defined in Subsection B of 14.7.4.8 NMAC, table 1. The bottom story of a two-story is allowed a minimum thickness of fourteen (14) inches with the upper story allowed a thickness of ten (10) inches, providing the structure meets the provisions of Subsection B of 14.7.4.8 NMAC, table 1. Passive solar structures incorporating the use of solar mass walls (trombe), direct gain arrays or sunspaces (greenhouses) as defined by the passive solar heating worksheet, dated June 2004 and prepared by the state of New Mexico energy, minerals and natural resources department, are allowed.

B. Fireplaces. Adobe or masonry fireplaces and chimneys in compressed earth block structures shall comply with 14.7.3.18 NMAC. They shall be integrated into adjacent compressed earth block walls during construction or secured to them by suitable steel ladder reinforcement or reinforcing rods.

C. Count Rumford fireplaces. Count Rumford fireplaces are allowed as designated in 14.7.3.18 NMAC.

D. Stop work. The building inspector shall have the authority to issue a "stop work" order if the provisions of this section are not complied with.

E. Stabilized compressed earth blocks. The term "stabilized" is defined to mean a block with certain admixtures that retains minimum strength requirements as specified in Subsection J of 14.7.4.23 NMAC after saturation in water. Saturation is defined as a minimum four (4) hours of submersion in water as defined in ASTM D1633-00.

F. Unstabilized compressed earth blocks. Unstabilized blocks are defined as not meeting the minimum strength requirements as defined in Subsection J of 14.7.4.23 NMAC after saturation in water. Use of unstabilized compressed earth blocks is prohibited within four (4) inches of the finished floor grade. Stabilized compressed earth blocks, poured concrete, or waterproof masonry units and mortar may be used for the first four (4) inches above floor grade.

G. Materials. The material must be a mineral soil with the aggregate content not exceeding one (1) inch in diameter. The material shall not contain more than two (2) percent soluble salts.

H. Testing. Each of the tests prescribed in this section shall be applied to sample units selected at random of five (5) units per building project prior to construction. Test may be waived if block manufacturer provides certification of compliance. The certification must be dated within one year of the date on the application for the building permit.

I. Shrinkage cracks. Shrinkage cracks are allowed, providing that these cracks do not jeopardize the structural integrity of the blocks.

J. Compressive strength. Cured units shall have a minimum compressive strength of three hundred (300) pounds per square inch when tested. The compressed earth block shall be tested in the flat position. The length of the test unit must be a minimum of twice the width. The surfaces must be smooth. The test unit shall be subjected to a uniform compressive load that is gradually increased at a rate of five hundred (500) psi/minute until failure occurs. A true platen should be used in the testing machine, along with swivel head to accommodate nonparallel bearing surfaces. The compressive strength is defined as P/A, where P = load and A - area of compression surface.

K. Modulus of rupture. Units shall have a minimum compressive strength of fifty (50) pounds per square inch in modulus of rupture when tested according to the following procedures: A cured unit shall be laid over two-inch (2") diameter cylindrical supports two (2) inches from each end and extending across the full width of the unit. A cylinder two (2) inches in diameter shall be laid midway between and parallel to the supports. Load shall be applied to the cylinder at a rate of five hundred (500) psi/minute until rupture occurs. The modulus of rupture is equal to: 3PL/2bt2 (P= rupture load in pounds, L= span between supports, b= width of block, t= thickness of block).

[14.7.4.23 NMAC - Rp, 14.7.4.23 NMAC, 1-28-11]

14.7.4.24 MORTAR:

A. General. The use of earth mortar is allowed if the earth mortar material is compatible with the compressed earth blocks. Conventional lime/sand/cement mortars of Types M, S, and N are also allowed. Mortar "bedding" joints shall be fully grouted. Head joint mortar is not required provided that the blocks are initially laid in contact. Partially open "head" joints are allowed if the surface is to be plastered. All joints shall be lapped at least twenty-five (25) percent of the visible block length.

B. Slip mortars. Liquid mud slip mortar is allowed, providing it is made of a compatible soil that is screened to eliminate aggregate larger than one-eighth (1/8) inch in diameter. Water may be substituted for slip or other mortars, providing adequate adhesion is demonstrated.

C. Stacking. "Dry stacking" of compressed earth blocks is allowed providing that adequate adhesion is demonstrated, the wall is to be stuccoed or plastered and the wall is not less than ten (10) inches in thickness.

D. Use. Compressed earth block may be cured prior to use or laid directly from the press into the wall in an uncured state. Compressed earth block shall be laid in level courses so that the top of any course shall be at the same height above the stem around the structure.

E. Foundations. Compressed earth blocks may not be used for foundations or basement walls.

F. Footings. All compressed earth block walls shall have a continuous footing at least ten (10) inches thick. The footing width must be a minimum of thirty-three (33) percent greater than the wall width, but not less than two (2) inches on each side. The stem wall must be centered on the footing.

G. Stem walls. All stem walls that support CEB units shall extend to an elevation not less than eight (8) inches above the exterior finish grade. Stem walls shall be as thick as the exterior wall. Where perimeter insulation is used, a variance is allowed for the stem wall width to be two (2) inches smaller than the width of the CEB wall it supports.

H. Concrete grade beam. Rubble-filled foundation trench designs with a reinforced concrete grade beam above are allowed to support CEB construction. An architect or engineer registered in the state of New Mexico shall certify the grade beam/rubble-filled trench design portion. Other alternative foundation systems must be approved by the building official.

[14.7.4.24 NMAC - Rp, 14.7.4.24 NMAC, 1-28-11]

14.7.4.25 BOND BEAMS:

A. General. All bearing walls shall be topped with a continuous bond beam (except patio walls less than six (6) feet high above stem). All bond beam construction shall be in accordance with accepted engineering practices.

B. Concrete bond beam. Concrete bond beams shall be a minimum of six (6) inches high by ten (10) inches wide for walls up to fourteen (14) inches thick. Where CEB walls are wider than one course, two-thirds (2/3) of each visible course top shall be covered by the concrete bond beam. All concrete bond beams shall be reinforced with a minimum of two (2) no. 4 reinforcing rods at each floor and ceiling plate line.

C. Wood bond beam. Wood bond beams shall be a minimum of six (6) inches deep by ten (10) inches wide for walls up to fourteen (14) inches thick. Where CEB walls are wider than one course, two-thirds (2/3) of each visible course top shall be covered by a wood bond beam and the roof load shall be distributed over both bond beams. Wood bond beams may be solid in the six inch (6") dimension, or may be built up by applying layers of lumber. Ends of wood bond beams are to be lapped in minimum of the width of the wall and fully nailed. Galvanized metal straps or perforated metal straps, 18 gauge minimum and twelve (12) inches long, may be used to join the ends of wood bond beam members. Full nailing of straps is required. No wood layer shall be less than one (1) inch nominal thickness. The building official shall approve all wooden bond beams for walls wider than fourteen (14) inches.

[14.7.4.25 NMAC - Rp, 14.7.4.25 NMAC, 1-28-11]

14.7.4.26 LINTELS:

A. General. Lintels of wood or concrete are allowed. The bearing length of any lintel shall not be reduced by an angled or splayed window or door opening. Other lintel designs are accepted providing that engineering is submitted for review by the building official.

B. Wood lintels. When an engineer's drawing and seal is not provided for lintels, all wood lintels shall conform to table 5 and have a fiber stress rating of at least 850 psi.

Table 5 CEB WALL WOOD LINTEL SCHEDULE				
				MINIMUM FIBER STRESS 850 PSI
Wall Width	**Max. Span**	**Size**	**Bearing length on earth wall**	**Load Capacity**
10"	4'-0"	10" x 6"	12"	860 PLF
	6'-0"	10" x 8"	12"	1020 PLF
	8'-0"	10" x 10"	18"	1150 PLF
	10'-0"	10" x 12"	24"	1000 PLF

	12'-0”	10” x 14”	24”	1000 PLF
12”	4'-0”	10” x 6”	12”	860 PLF
	6'-0”	10” x 8”	12”	1020 PLF
	8'-0”	10” x 10”	18”	1150 PLF
	10'-0”	10” x 12”	24”	1000 PLF
	12'-0”	10” x 14”	24”	1000 PLF
14”	4'-0”	12” x 6”	12”	950 PLF
14”	6'-0”	12” x 8”	12”	1150 PLF
	8'-0”	12” x 10”	18”	1300 PLF
	10'-0”	12” x 12”	24”	1300 PLF
	12'-0”	12” x 14”	24”	1200 PLF

C. Concrete lintels. When an engineer’s drawing and seal is not provided for lintels, all concrete lintels shall conform to table 6 and have a minimum strength of 3000 psi.

Table 6	**CEB WALL CONCRETE LINTEL SCHEDULE**			**MIN. 3000 psi**
Maximum Span	**Minimum depth***	**Reinforcing**	**Maximum Capacity per linear foot**	**Bearing length on earth wall**
Less than 6' - 0"	8”	2 - # 4	1500 lbs.	12”
6' - 0" to 10'- 0"	12”	3 - # 5	1500 lbs.	18”
11' - 0" to 16'- 0"	16”	3 - # 6	1500 lbs.	24”
* SIZE Wall width X depth of lintel				

[14.7.4.26 NMAC - Rp, 14.7.4.26 NMAC, 1-28-11]

14.7.4.27 ATTACHMENTS AND CONNECTIONS: Amend the following provision as follows.

A. Insulating boards or foams. Insulating boards or foams not exceeding two (2) inches in thickness may be adhered to the exterior of the CEB wall. When insulation board is used, round-cap nails shall attach it to the CEB wall with nails placed to avoid bed joints between courses. Cap nails shall have a maximum spacing of sixteen (16) inches from each other. Additionally, cap nails shall secure the rigid insulation boards around their perimeter edges, with nails spaced no less than twelve (12) inches apart. All cap nails shall penetrate a minimum of two (2) inches into the CEB wall. Insulating boards or foams shall not be used to form architectural shapes exceeding two (2) inches in thickness.

B. Insulations exceeding two (2) inches in thickness. Insulations exceeding two (2) inches in thickness may be used providing they do not form a vapor barrier. Their weight shall be supported by the stem wall below and contained within vertical furring strips, securely attached to the CEB wall. A sectional, scaled drawing for the proposed insulation scheme must be submitted for review by the building official.

[14.7.4.27 NMAC - Rp, 14.7.4.27 NMAC, 1-28-11]

14.7.4.28 PLASTERING:

A. Plasters and stuccos applied to uninsulated, unstabilized walls. Unstabilized, uninsulated exterior CEB walls can be protected with plasters or stuccos with a minimum thickness of seven-eighths (7/8) inch, if adequate roof, parapet, canal, and window flashing is provided.

(1) Portland-based plaster must be reinforced with self-furring metal wire mesh, minimum seventeen (17) gauge by one-and-a-half (1 1/2) inch openings, securely attached to the exterior CEB wall surface by nails or staples with a minimum penetration of one-and-a-half (1 1/2) inches. Such mesh fasteners shall have a maximum spacing sixteen (16) inches from each other. Wood surfaces or areas of dissimilar materials to be covered with Portland-based plaster must be protected from moisture with asphalt felt, covered with expanded metal lath, securely attached to the CEB wall.

(2) Type S hydrated lime stuccos are allowed providing that CEB head joints are left partially open as provided by Subsection A of 14.7.4.24 NMAC. Lime-based stuccos do not require a wire mesh cover except when used over wood or dissimilar materials in which case the surface must be protected from moisture with asphalt felt, covered with expanded metal lath.

B. Plasters and stuccos applied over foam or board insulations. Portland-based plasters or lime-based stuccos used over insulation board or foam shall follow Subsection A of 14.7.4.27 NMAC.

C. Other Protective coatings or plasters. Coatings other than Portland-based plaster or lime-based stucco are allowed providing they do not constitute a vapor barrier. Interior gypsum or mud plasters may be applied directly to the wall, provided that CEB head joints have been left partially open. Expanded metal lath shall be used around window and door openings. If desired, exterior adobe walls may be protected with mud plaster. Alternative plastering or coating systems shall be submitted for approval by the building official.
[14.7.4.28 NMAC - N, 1-28-11]

14.7.4.29 PARAPETS:

A. Plastered parapets, whether of CEB or frame construction, shall require a seamless but permeable waterproof cover or weather barrier, capping the entire parapet and wrapping over each side. The cover shall extend past the bond beam a minimum of four (4) inches on the wall side. On the roof side, the cover shall properly lap any rising roof felts or membranes and be properly sealed. A layer of expanded metal lath shall be installed over the cover before plaster or stucco is applied. The lath shall extend past the bond beam on the wall side a minimum of five (5) inches and on the roof side the same distance as the cover below, allowing for plaster stops or seals. No penetrating fasteners are allowed on the horizontal surface of parapets.

B. Exposed parapets of CEB shall be laid in level courses of fully stabilized block and mortar. Bed and head joints shall be fully grouted and tightly tooled. Bedding joints at bond beams and around vents and canales shall be fully grouted and tightly tooled. The horizontal top of exposed CEB parapets shall be covered with a minimum three-fourths (3/4) inch layer of fully stabilized mortar, troweled to conform to the parapet. Water proof sealers are allowed, providing they are permeable. Other parapet covers, such as flagstone, Spanish mission tile or cement mortar are allowed providing they are securely attached to the parapet. A scaled, sectional drawing shall be provided to the building official showing the attachment scheme.
[14.7.4.29 NMAC - N, 1-28-11]

14.7.4.30 FIGURE 1 - BUTTRESS

Figure 1 – Buttress:

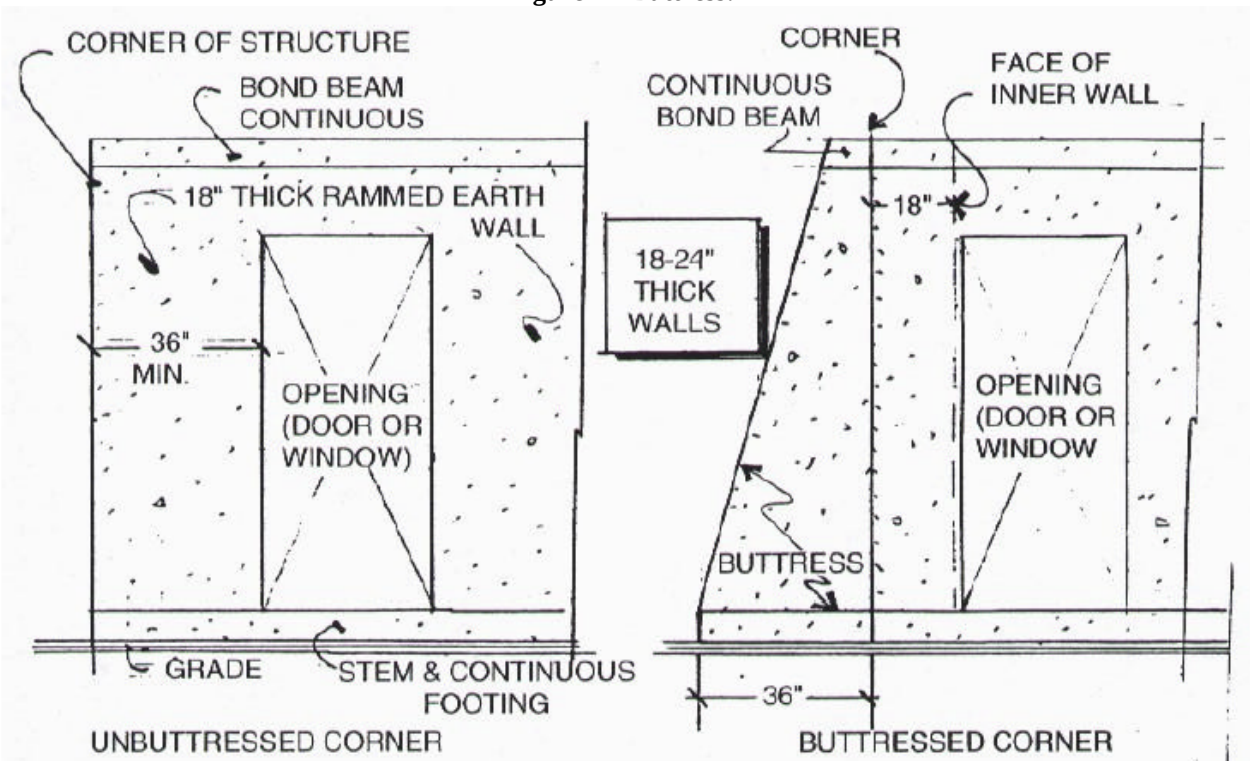

[14.7.4.30 NMAC - Rp, 14.7.4.28 NMAC, 1-28-11]

14.7.4.31 FIGURE 2 - CHANNEL

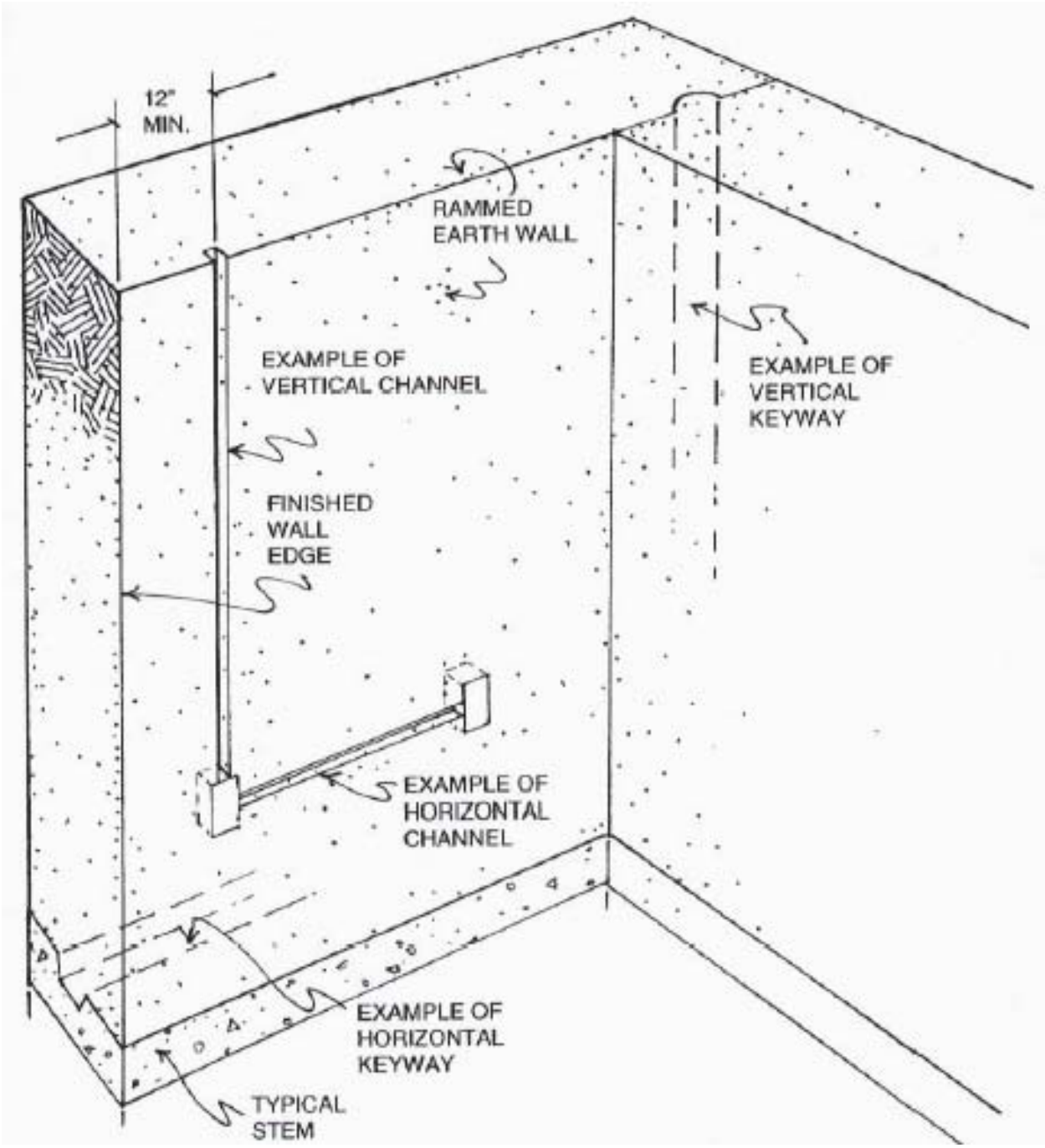

[14.7.4.31 NMAC - Rp, 14.7.4.29 NMAC, 1-28-11]

14.7.4.32 FIGURE 3 - KEYWAY

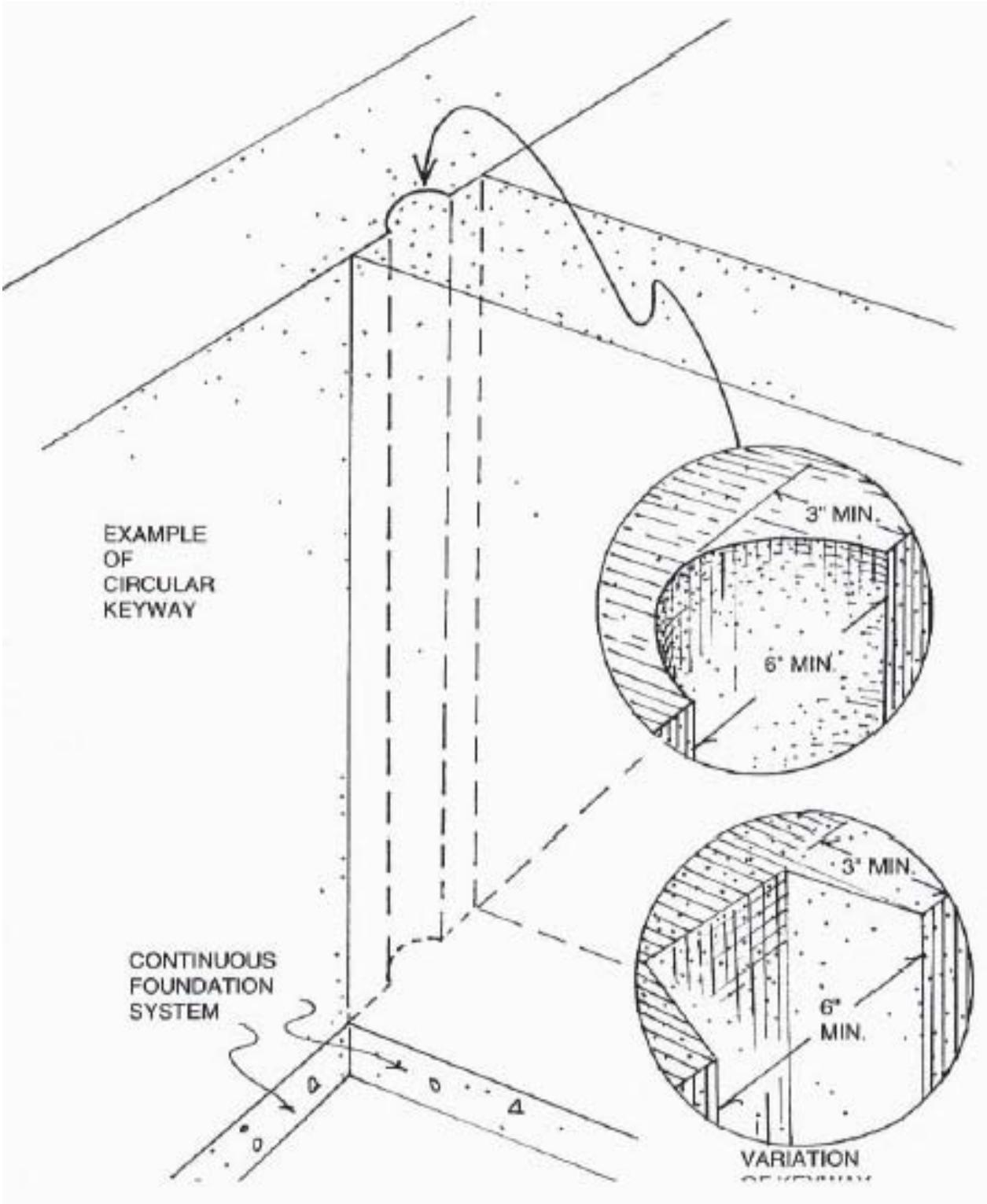

[14.7.4.32 NMAC - Rp, 14.7.4.30 NMAC, 1-28-11]

14.7.4.33 FIGURE 4 - NAILER:

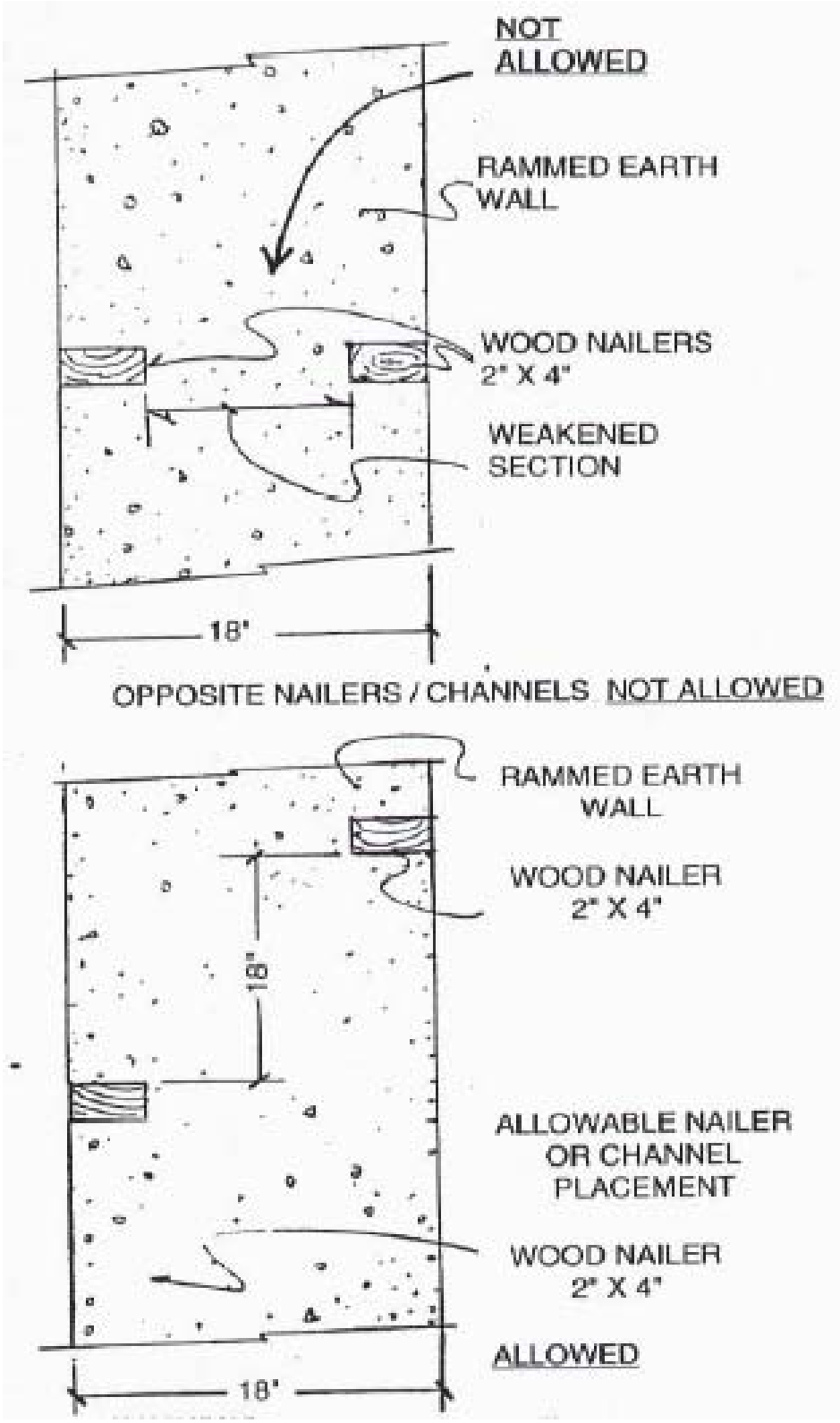

[14.7.4.33 NMAC - Rp, 14.7.4.31 NMAC, 1-28-11]

14.7.4.34 FIGURE 5 - LATERAL SUPPORT

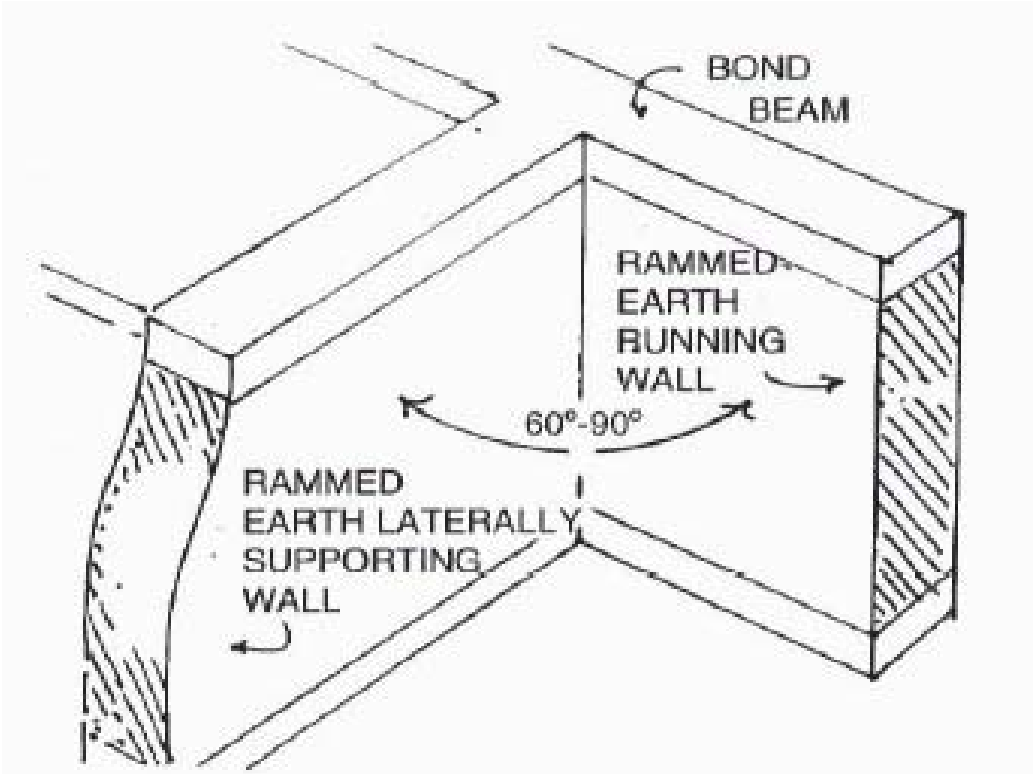

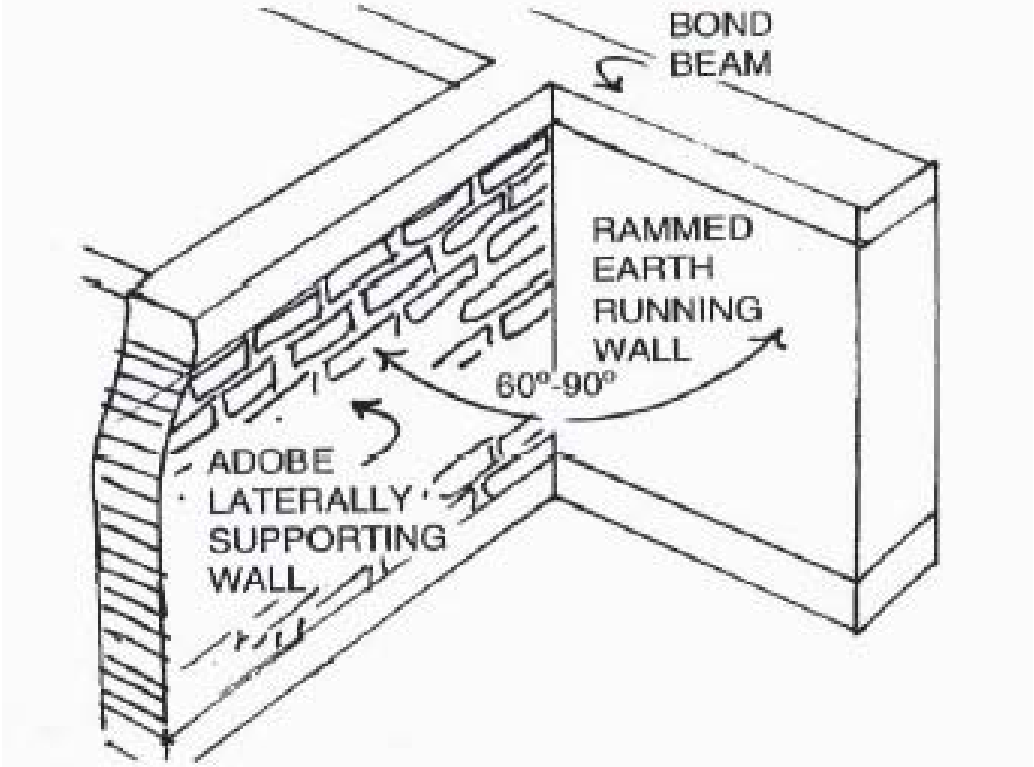

[14.7.4.34 NMAC - Rp, 14.7.4.32 NMAC, 1-28-11]

14.7.4.35 FIGURE 6 - LATERAL SUPPORT

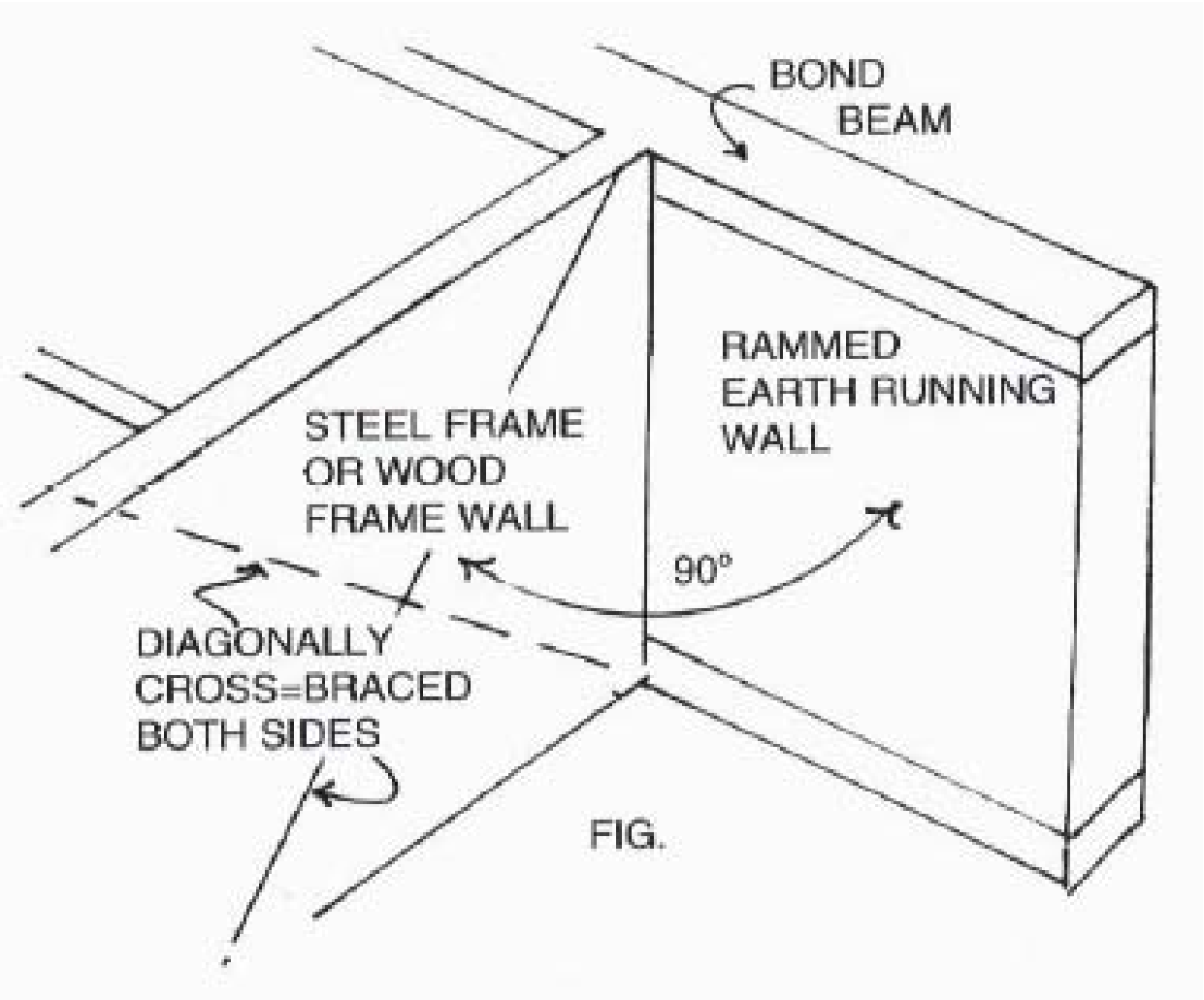

[14.7.4.35 NMAC - Rp, 14.7.4.33 NMAC, 1-28-11]

14.7.4.36 FIGURE 7 - LATERAL SUPPORT:

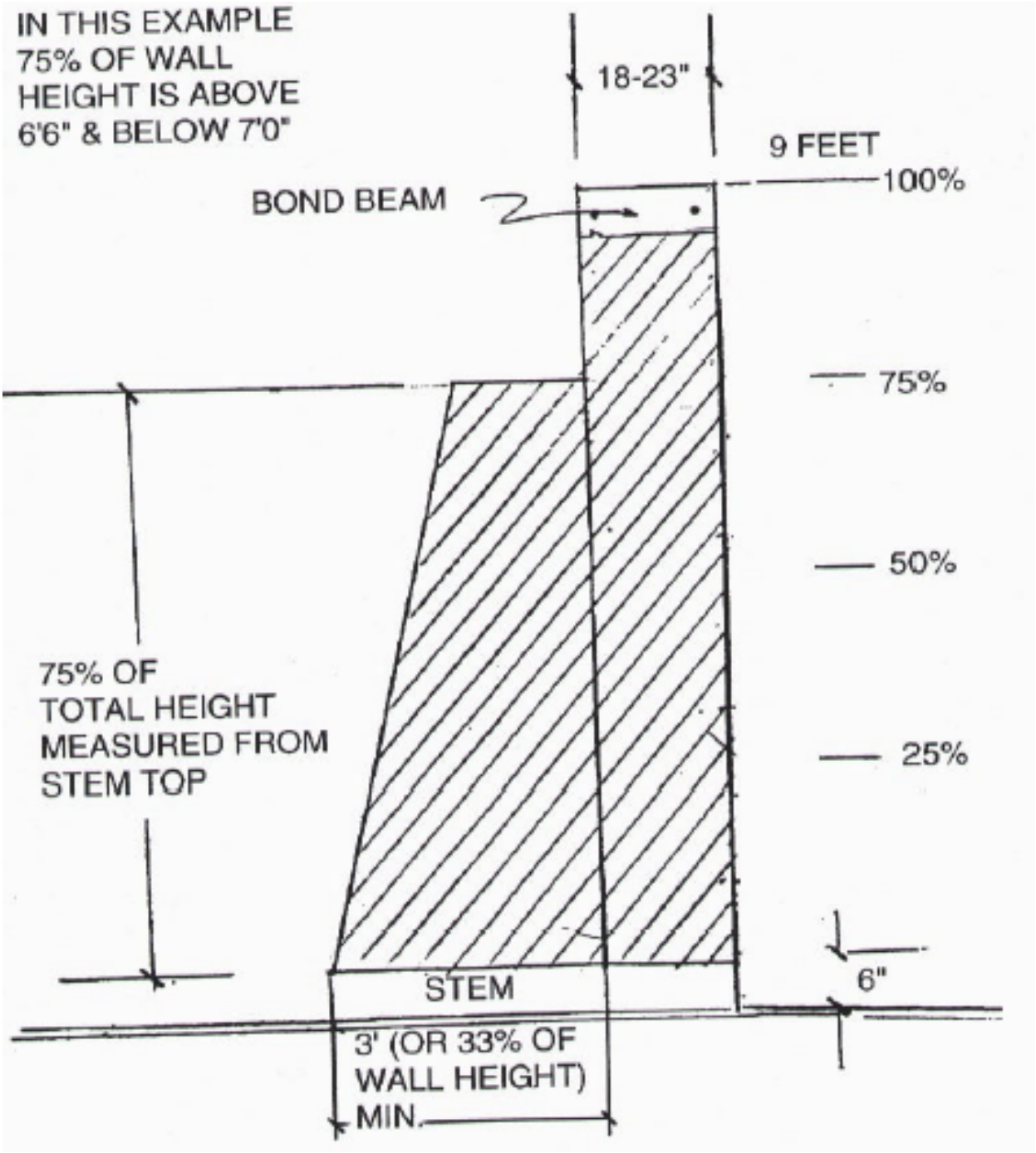

[14.7.4.36 NMAC - Rp, 14.7.4.34 NMAC, 1-28-11]

14.7.4.37 FIGURE 8 - OPENINGS:

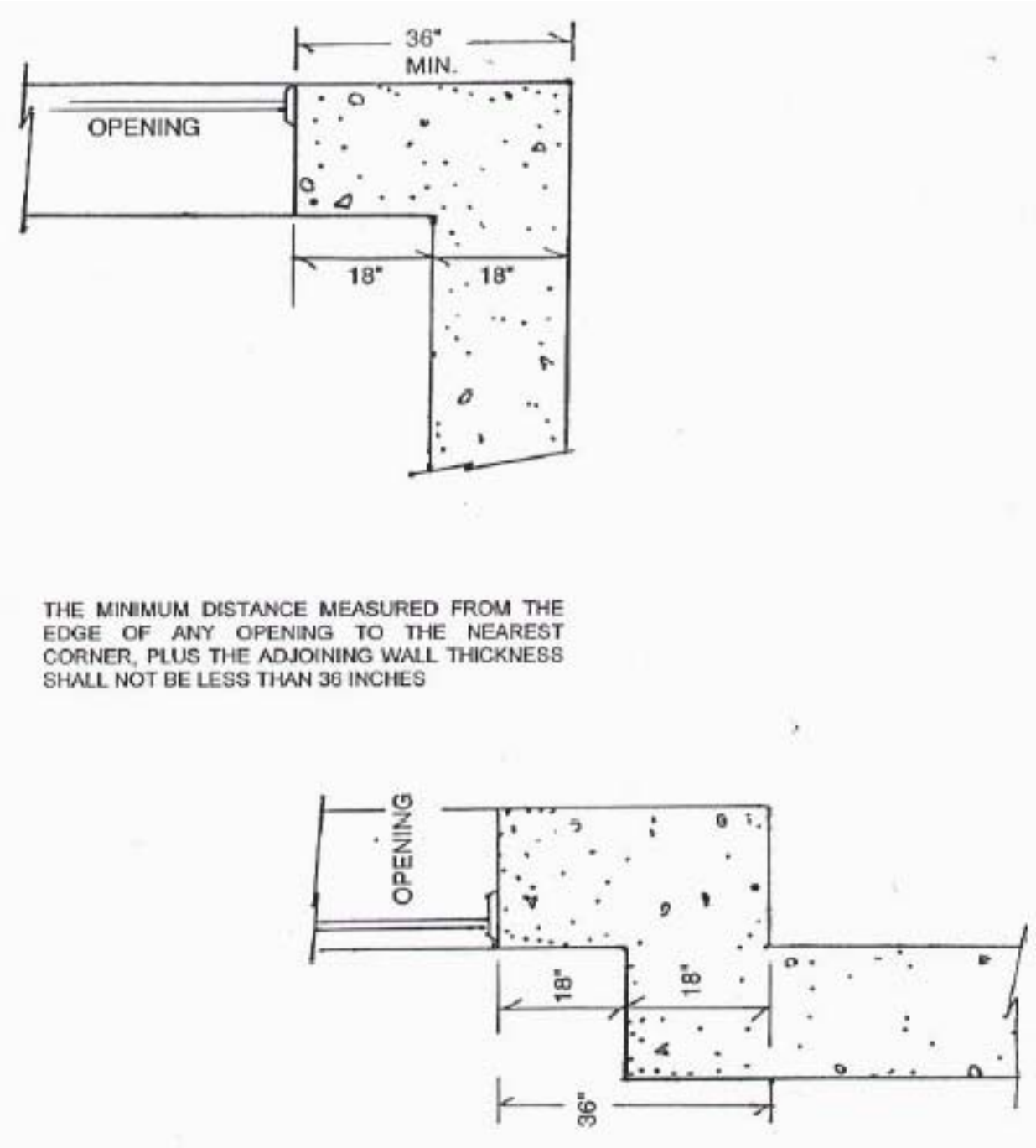

[14.7.4.37 NMAC - Rp, 14.7.4.35 NMAC, 1-28-11]

14.7.4.38 FIGURE 9 - A PIERS:

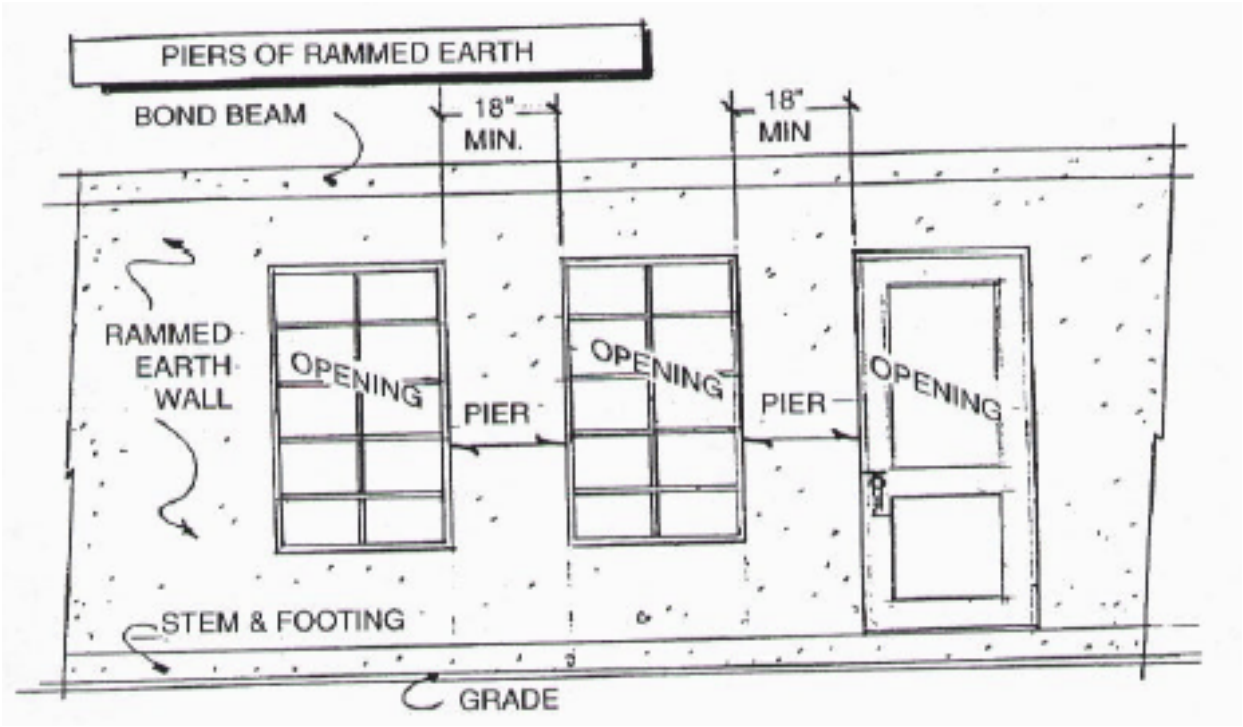

[14.7.4.38 NMAC - Rp, 14.7.4.36 NMAC, 1-28-11]

14.7.4.39 FIGURE 9 - B PIERS:

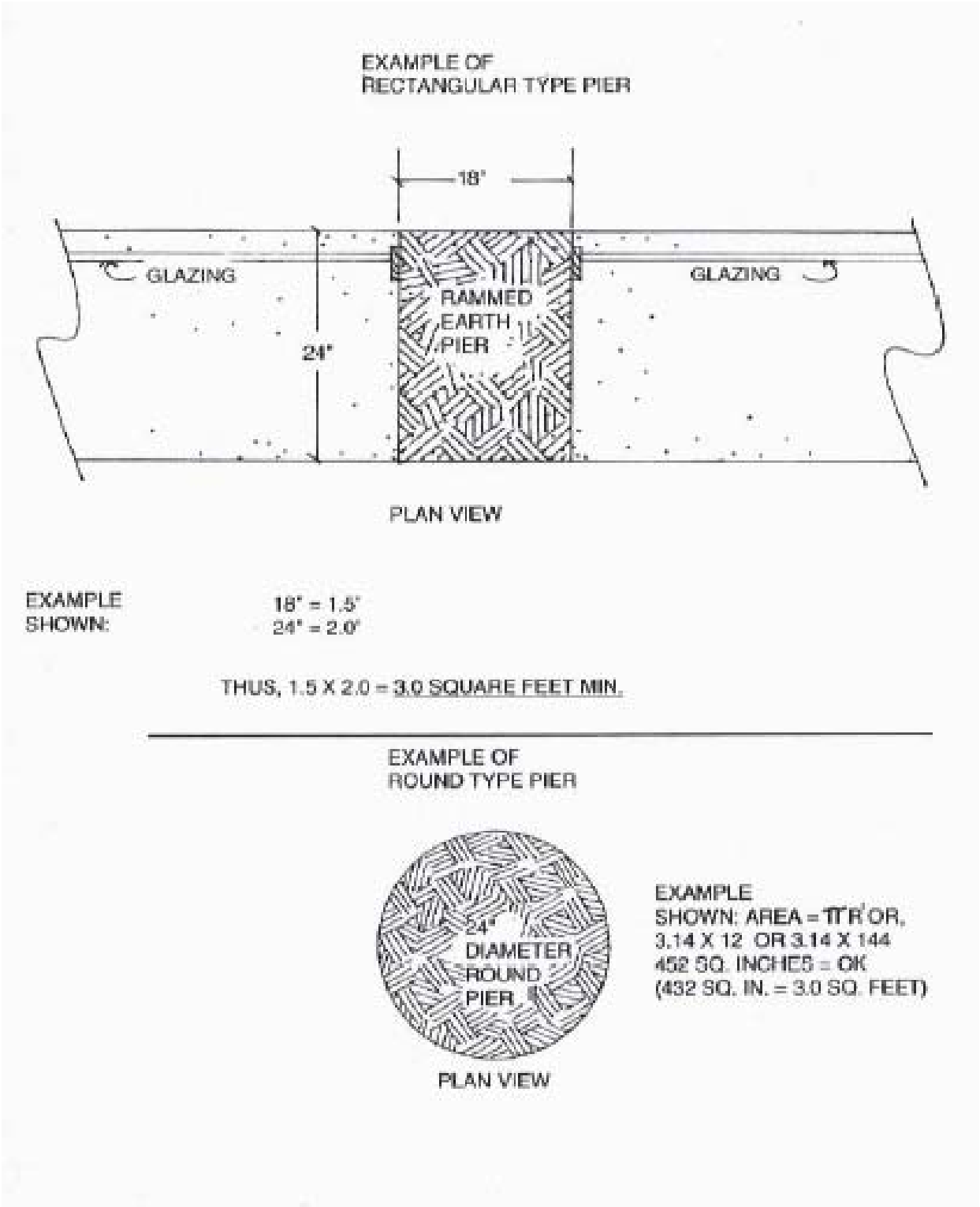

[14.7.4.39 NMAC - Rp, 14.7.4.37 NMAC, 1-28-11]

14.7.4.40 FIGURE 10 - WOOD BOND BEAM CONSTRUCTION:

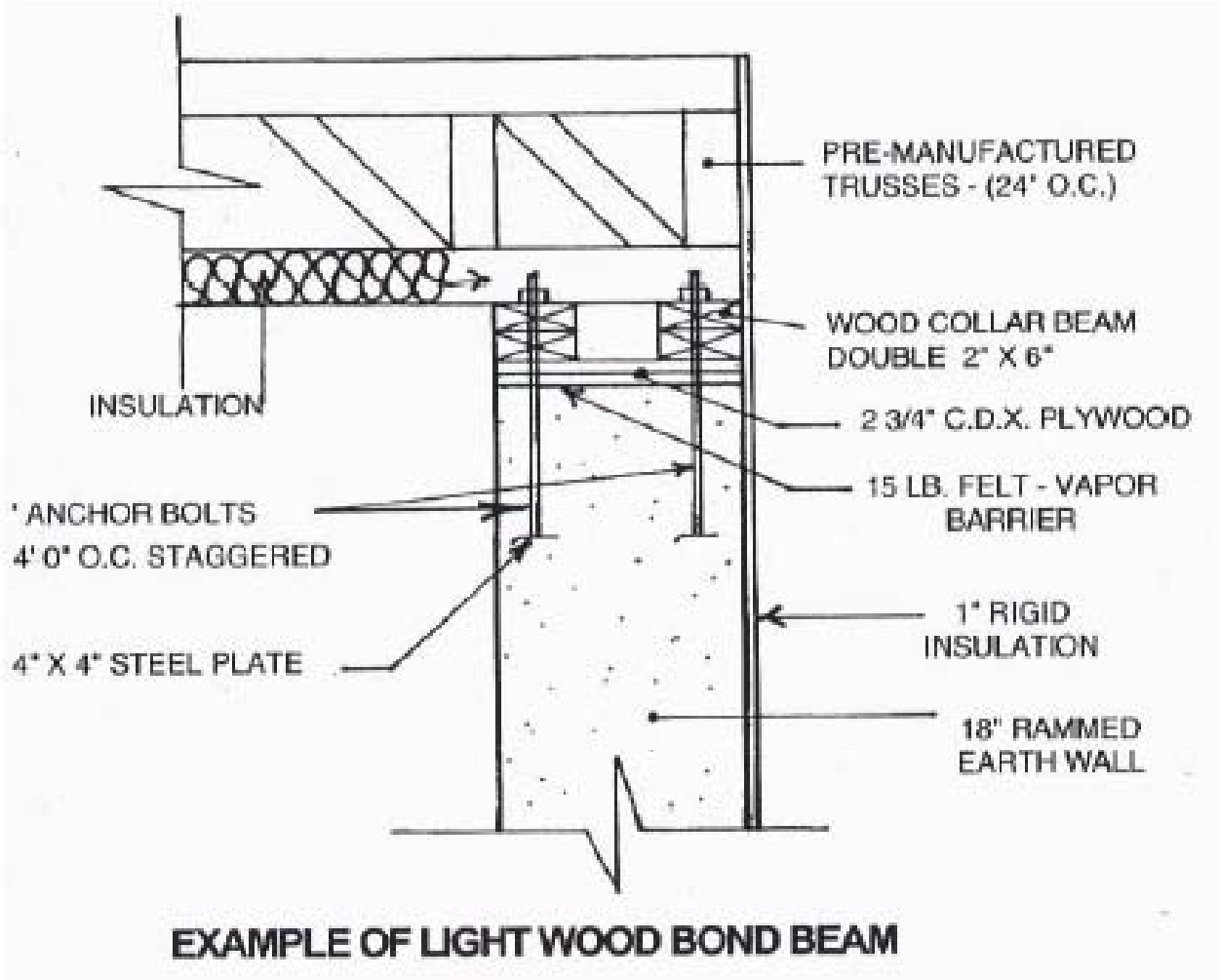

[14.7.4.40 NMAC - Rp, 14.7.4.38 NMAC, 1-28-11]

14.7.4.41 FIGURE 11 - PLACEMENT OF ATTACHED MATERIALS:

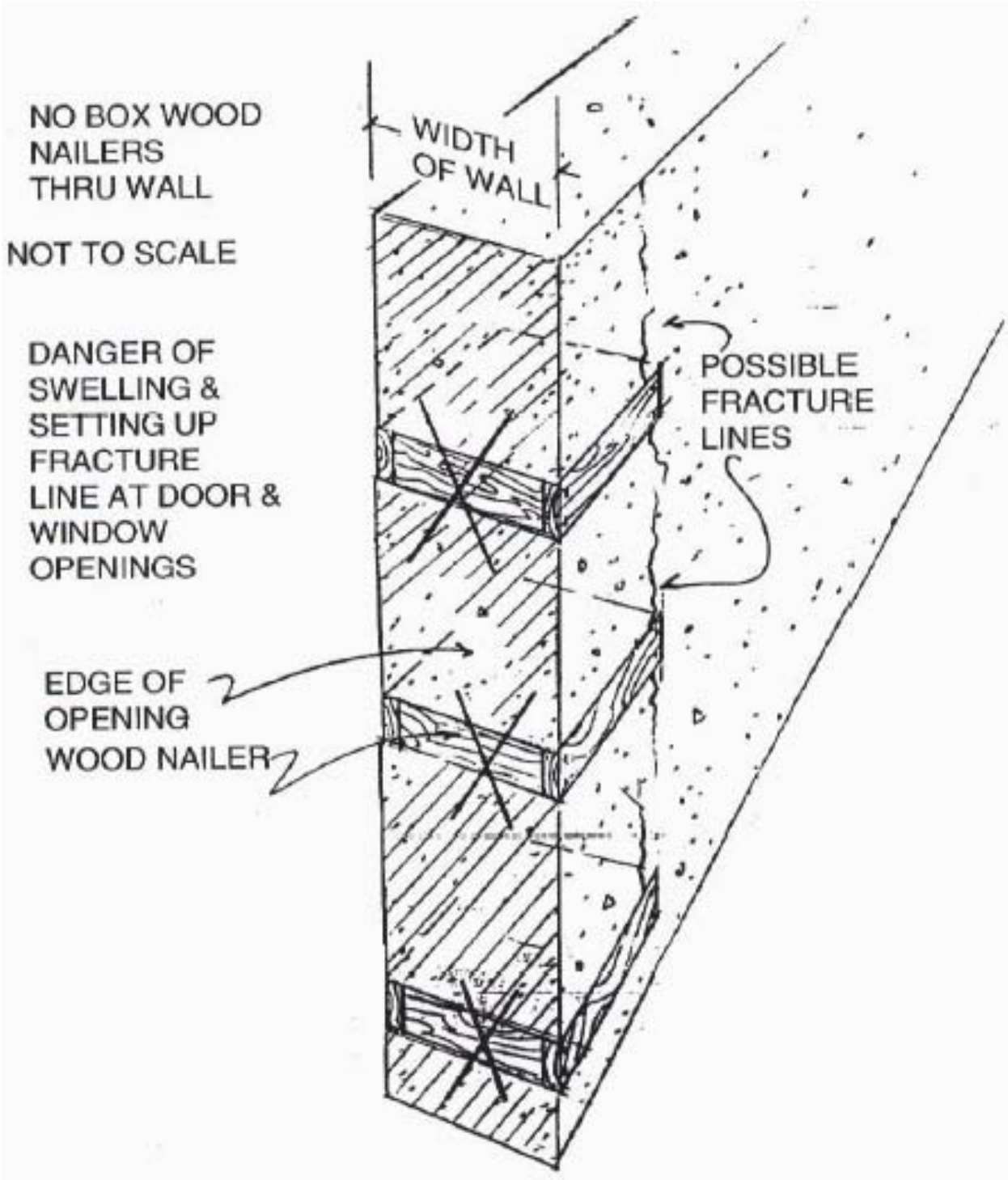

[14.7.4.41 NMAC - Rp, 14.7.4.39 NMAC, 1-28-11]

14.7.4.42 FIGURE 12 - ATTACHMENT OF AN ADOBE WALL TO A RAMMED EARTH WALL:

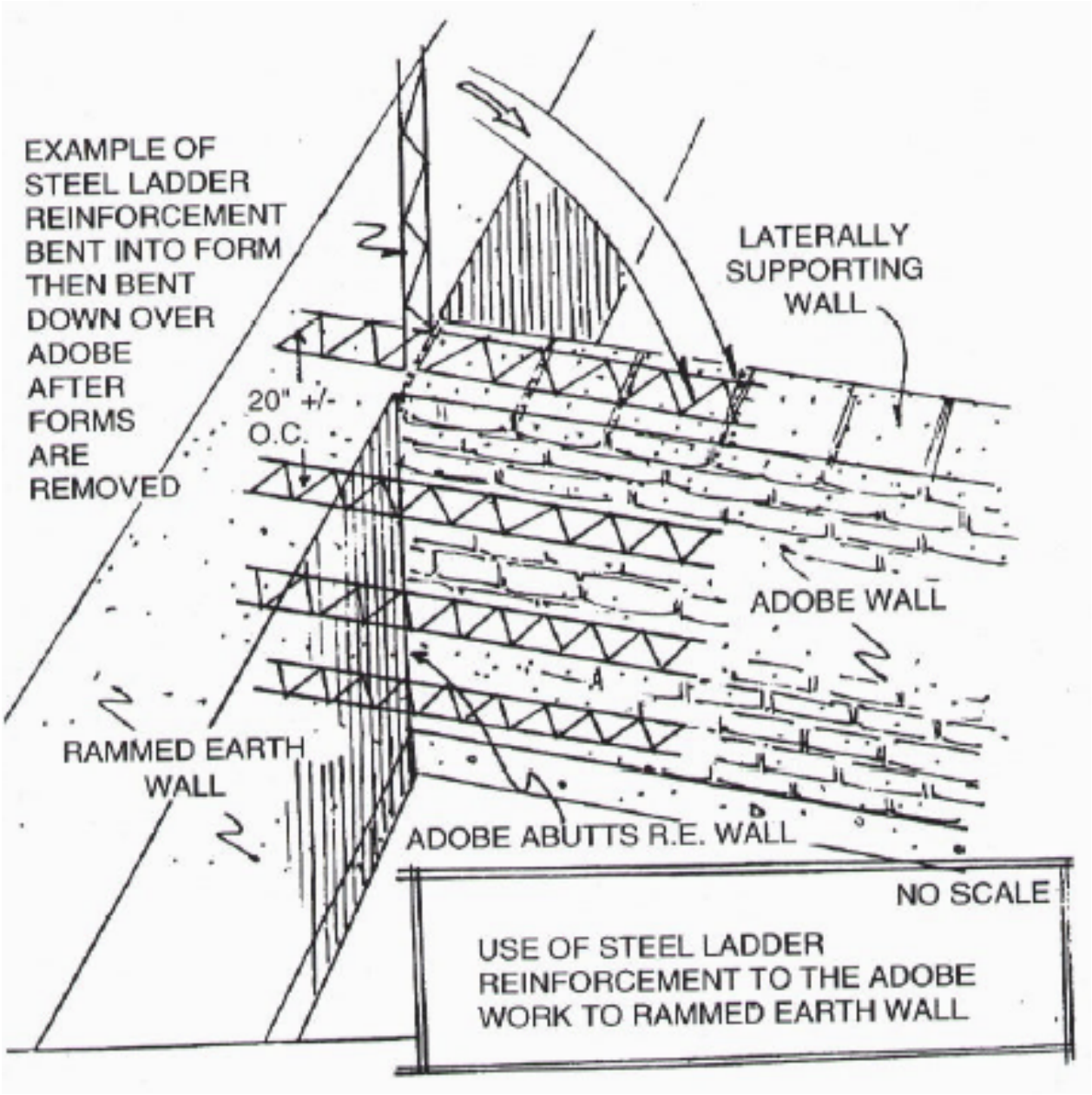

[14.7.4.42 NMAC - Rp, 14.7.4.40 NMAC, 1-28-11]

14.7.4.43 FIGURE 13 - ATTACHMENT OF AN ADOBE WALL TO A RAMMED EARTH WALL:

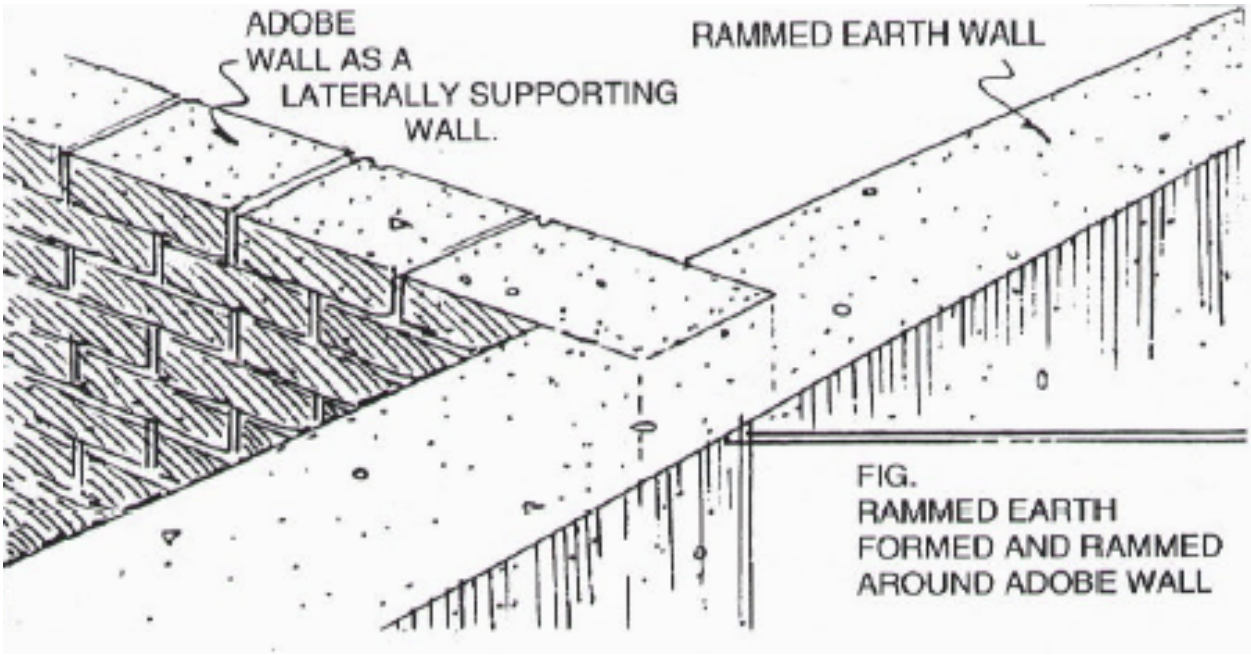

[14.7.4.43 NMAC - Rp, 14.7.4.41 NMAC, 1-28-11]

14.7.4.44 FIGURE 14 - ATTACHMENT OF A LOAD BEARING WOOD OR STEEL FRAME WALL TO A RAMMED EARTH WALL:

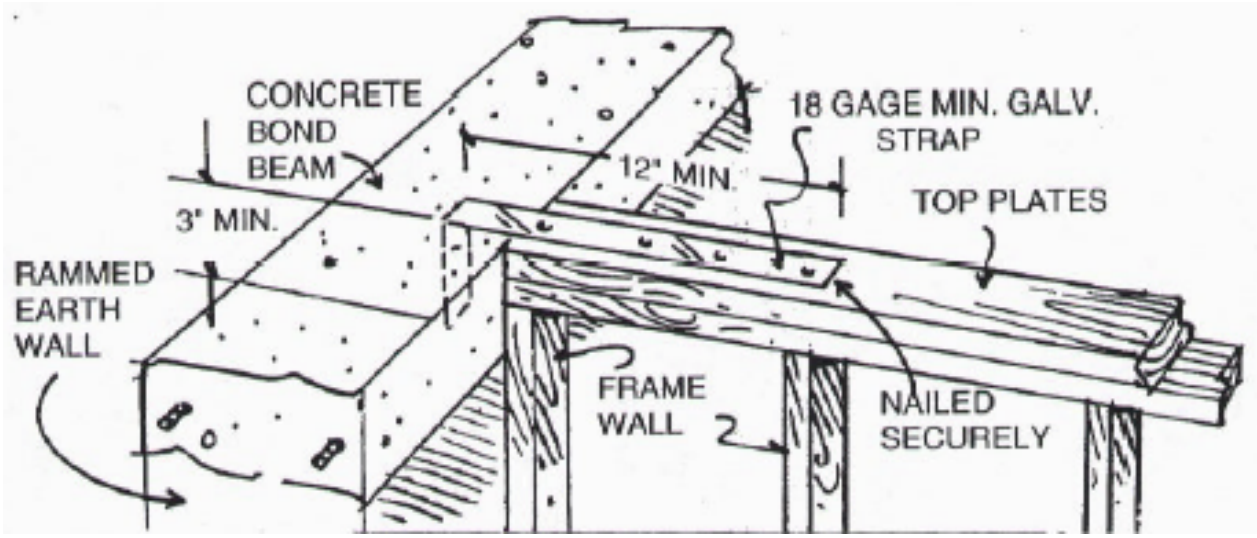

[14.7.4.44 NMAC - Rp, 14.7.4.42 NMAC, 1-28-11]

14.7.4.45 FIGURE 15 - BEARING LIMITATIONS:

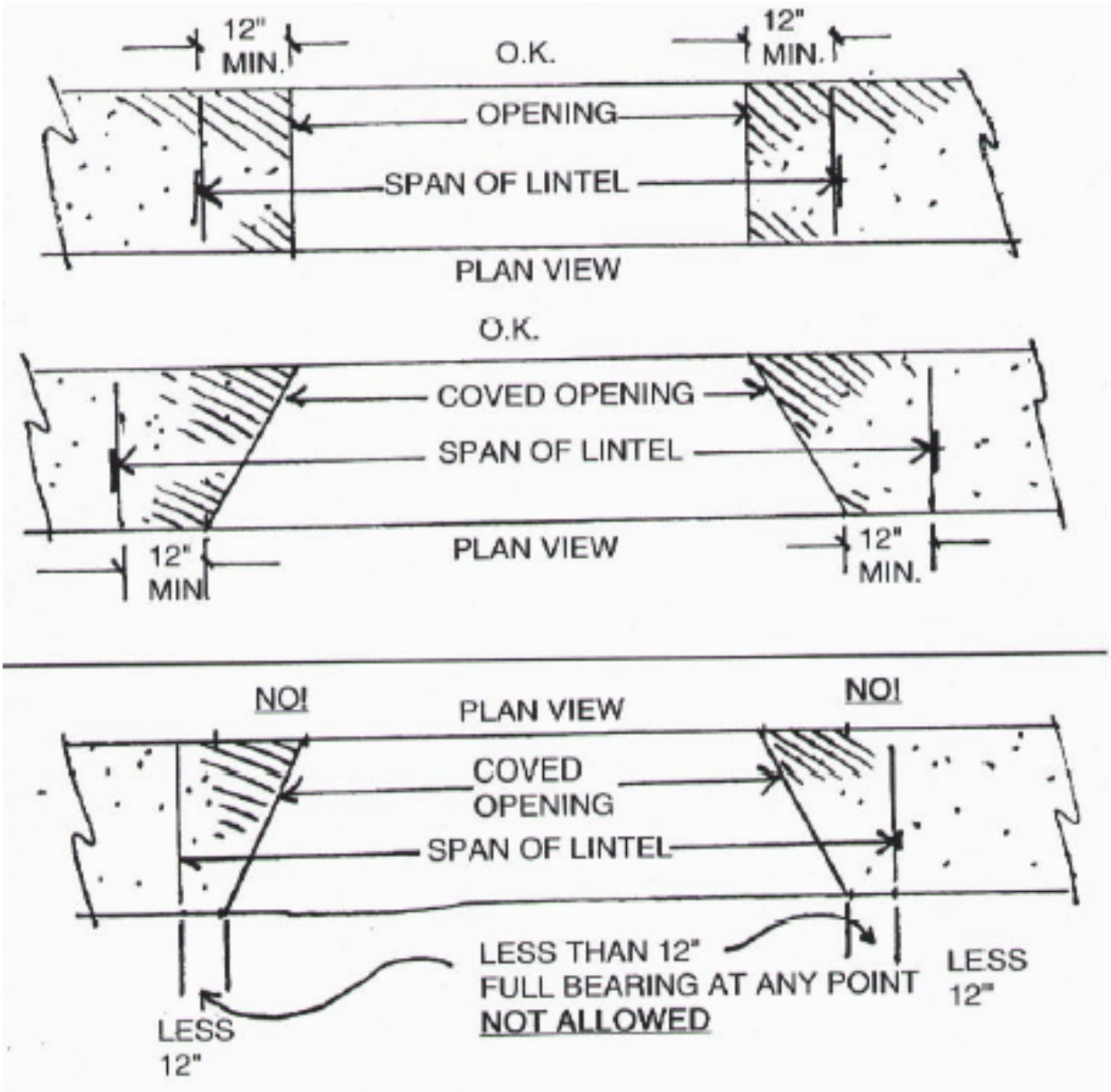

[14.7.4.45 NMAC - Rp, 14.7.4.43 NMAC, 1-28-11]

14.7.4.46 FIGURE 16 - ATTACHMENT OF A CONCRETE BOND BEAM TO A RAMMED EARTH WALL:

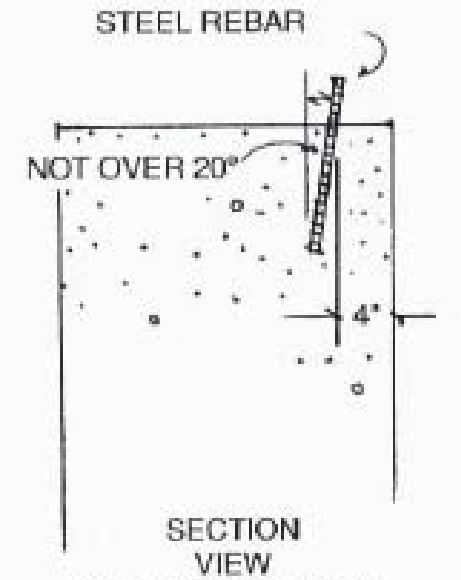

SECTION
VIEW
OF RAMMED EARTH
WALL
SHOWING TYPICAL REBAR PIN

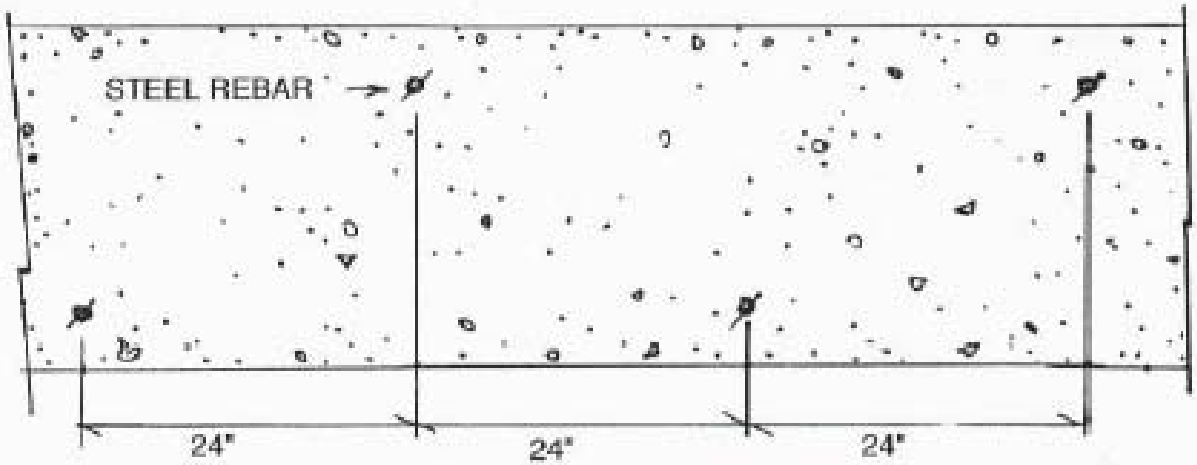

PLAN VIEW
OF STAGGERED REBAR

[14.7.4.46 NMAC - Rp, 14.7.4.44 NMAC, 1-28-11]

HISTORY OF 14.7.4 NMAC:
Pre-NMAC History: None.

History of Repealed Material:
14.11.11 NMAC, Standard for Rammed Earth Construction (filed 10-31-01) repealed 11-19-04.

14.7.4 NMAC, 2003 New Mexico Earthen Building Materials Code (filed 10-18-04) repealed 1-1-08.
14.7.4 NMAC, 2006 New Mexico Earthen Building Materials Code (filed 8-16-2007) repealed 1-28-11.

Other History:
14.11.11 NMAC, Standard for Rammed Earth Construction (filed 10-31-01) renumbered and replaced by 14.7.4 NMAC, 2003 New Mexico Earthen Building Materials Code (*which did not include figures previously filed in 14.11.11 NMAC*), effective 11-19-04.
14.7.4 NMAC, 2003 New Mexico Earthen Building Materials Code (filed 10-18-04) was replaced by 14.7.4 NMAC, 2006 New Mexico Earthen Building Materials Code (*which includes figures previously filed in 14.11.11 NMAC*), effective 1-1-08.
14.7.4 NMAC, 2006 New Mexico Earthen Building Materials Code (filed 8-16-07) was replaced by 14.7.4 NMAC, 2009 New Mexico Earthen Building Materials Code, effective 1-28-11.