US EPA ARCHIVE DOCUMENT

EXHIBIT 5

Metropolitan Sewer District of Greater Cincinnati

SSO MONITORING & REPORTING PLAN

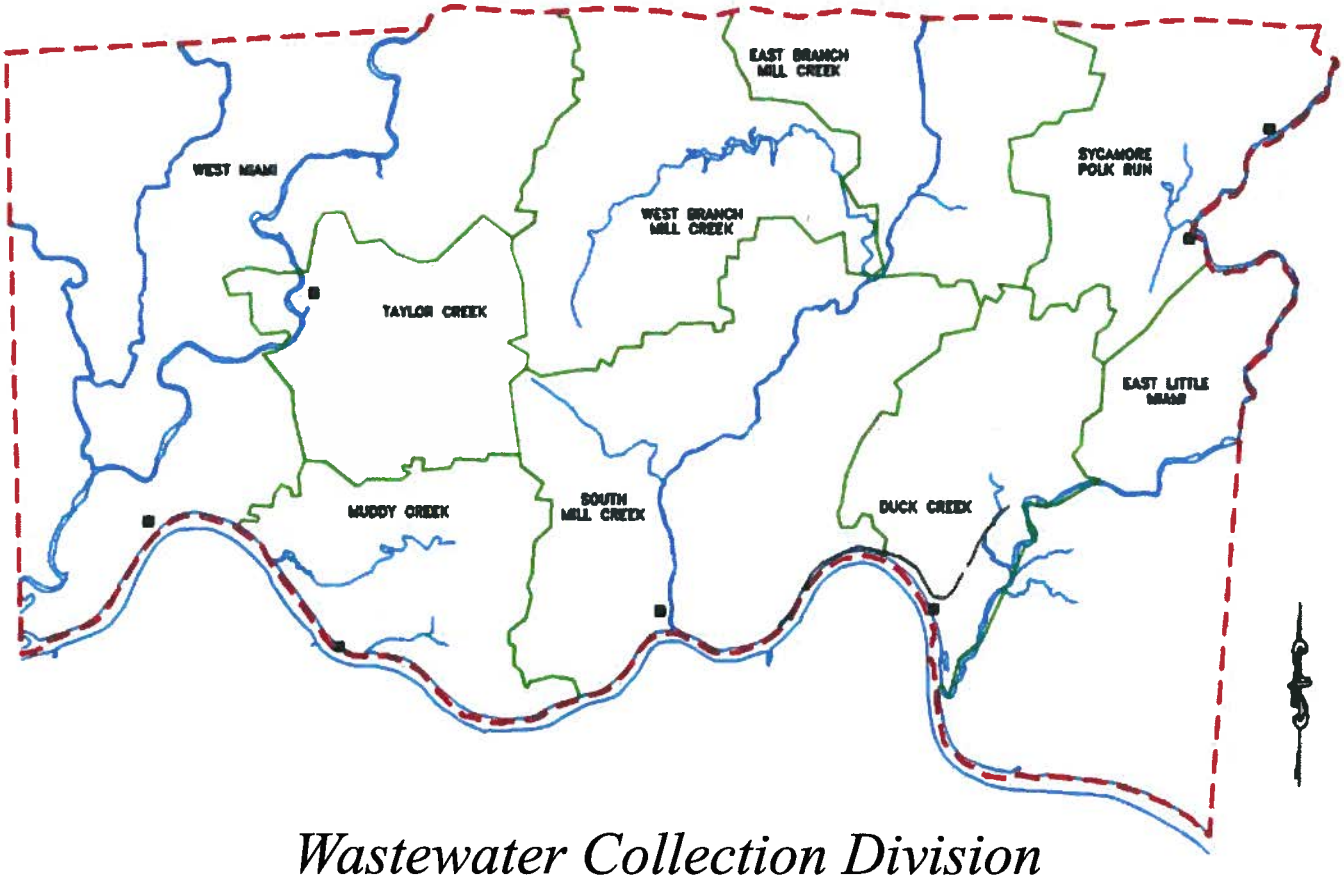

Wastewater Collection Division

R.D. Zande & Associates

DECEMBER 1999
REVISED FEBRUARY 2002
and JULY 2002

MSD

SSO MONITORING AND REPORTING PLAN

DECEMBER 1999
(REVISED February 2002 and July 2002)

Prepared for

The Metropolitan Sewer District

of

Greater Cincinnati

TABLE OF CONTENTS

SECTION	TITLE	PAGE
1.0	INTRODUCTION	1
2.0	BACKGROUND AND MONITORING METHODOLOGY	4
3.0	MONITORING METHODS	12
4.0	COMMUNICATIONS AND REPORTING	15

LIST OF TABLES

TABLE	TITLE	PAGE
1	KNOWN SANITARY SEWER OVERFLOW LOCATIONS	7
2	MONITORING ROUTES	11

LIST OF FIGURES

FIGURE	TITLE	PAGE
1	SSO LOCATIONS IN HAMILTON COUNTY	3
2	TWO TYPES OF OVERFLOW MANHOLES	6

1.0 Introduction

The Sanitary Sewer Overflow (SSO) Monitoring and Reporting Plan is an operational document that describes the procedures taken by the Metropolitan Sewer District of Greater Cincinnati (MSD) in reporting of all field-verified SSOs and the monitoring of wet weather "Enumerated SSO Locations." The monitoring of "Enumerated SSO Locations was initiated in compliance with the Ohio Environmental Protection Agency (OEPA) Director's Final Findings and Orders (DFFO's), issued September 22, 1992. Monitoring and reporting of SSO activity was described in the Findings and Orders as follows:

> Until discharges from all overflow points in MSD's separate sanitary sewers and interceptors are eliminated, the Board of County Commissioners shall comply with the monitoring and reporting requirements given in the attachment to the DFFO's.

The attachment to the DFFO's included a list of 34 known SSO locations and the requirement that any additional overflow points subsequently identified in MSD's separate sanitary sewers and interceptors shall be monitored. Monitoring was to be conducted in accordance with the following table and reported as required below.

CHARACTERISTIC			MONITORING REQUIREMENTS	
Reporting Code	Units	Parameter	Measurement Frequency	Sample Types
80990	No./Mo.	Occurrences	When Discharging	Estimate

For days when there are no overflow discharges, an explanation of "No Discharge" shall be entered in the additional remarks section. Also, on such days Zero should be reported for occurrences, duration and flow.

Notification and reporting of SSOs to USEPA, OEPA and the Hamilton County and/or local health department will be described in Section 4.0 of this document.

The SSO monitoring and reporting program has been in operation since the issuance of the Findings and Orders and is managed by the Wastewater Collection Division of MSD.

This plan will be subject to modification by the Director of MSD to account for changes in circumstances such as changes in the configuration of MSD facilities, the purchase of new equipment, changes in regulatory requirements, the development of new technologies, or changes in industry standards/best management practices.

Since inception of the monitoring program, the list of known SSO locations has been updated to include all known SSO points in the MSD service area. These revisions have included removal of SSO points eliminated from the system and the addition of new SSO locations that have been identified. The current list of known SSO locations included in the monitoring plan are identified in Table 1 (see pp. 7-9) and shown in Figure 1.

Figure 1

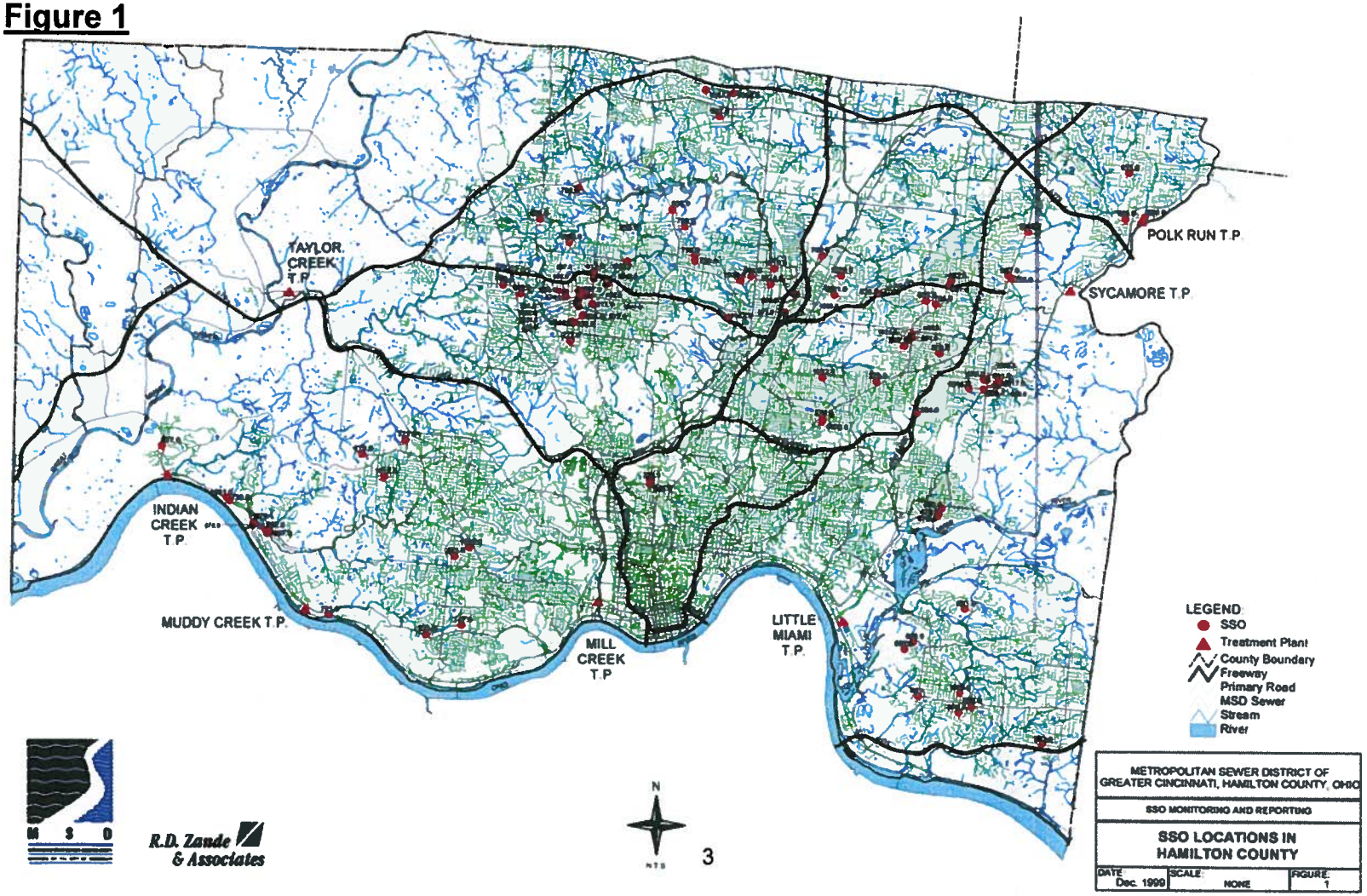
TAYLOR CREEK T.P.
POLK RUN T.P.
SYCAMORE T.P.
INDIAN CREEK T.P.
MUDDY CREEK T.P.
MILL CREEK T.P.
LITTLE MIAMI T.P.
LEGEND
SSO
Treatment Plant
County Boundary
Freeway
Primary Road
MSD Sewer
Stream
River
N
NTS
M S D
R.D. Zande & Associates
METROPOLITAN SEWER DISTRICT OF GREATER CINCINNATI, HAMILTON COUNTY, OHIO
SSO MONITORING AND REPORTING
SSO LOCATIONS IN HAMILTON COUNTY
DATE Dec. 1999
SCALE NONE
FIGURE 1

2.0 Background and Monitoring Methodology

With few changes, the monitoring program employed at the onset of the program is still utilized. Although the monitoring methods only provide "yes/no" information on discharge occurrences, MSD continues this approach for two primary reasons.

1. Current methodology is relatively reliable and can be performed at a reasonable cost to the District.

2. Most sites do not warrant a more complicated monitoring approach. With current methods MSD knows which locations are problem areas and which are not. Many capital improvements program and maintenance and rehabilitation projects already require flow monitoring to gather "design quality" information to quantify flows, surcharging, and discharges through SSOs.

The original list of sanitary sewer overflow stations was identified in Attachment 1 to the Ohio EPA Director's Final Findings and Orders. Additional work conducted for the program included the collection and review of all available existing information pertaining to sanitary sewer overflows, field inspection of all known sites, and the positive identification of the by-pass structures. This work resulted in identification of additional sites which were added to the original list.

Two specific categories of sanitary sewer overflows were encountered during field inspection of the facilities: (1) sanitary sewer overflows having a bypass pipe present to discharge wastewater to storm facilities or waters of the state; (2) "flip lid" manholes or locations where the manhole

lid is hinged to allow for discharge to waters of the state and prevent removal of the lid by overload conditions. Figure 2 shows two examples of Case No. 1 where a bypass pipe exists. In some instances an overflow dam separates the overflow pipe from the sanitary sewer channel.

Included in the study were a number of pumping station locations which lack a back-up power source. This group of pumping stations is believed to be representative of pump stations within the MSD service area. The complete list of sanitary sewer overflow locations, including the group of pump stations, can be found in Table 1.

Figure 2

Two Types of Overflow Manholes

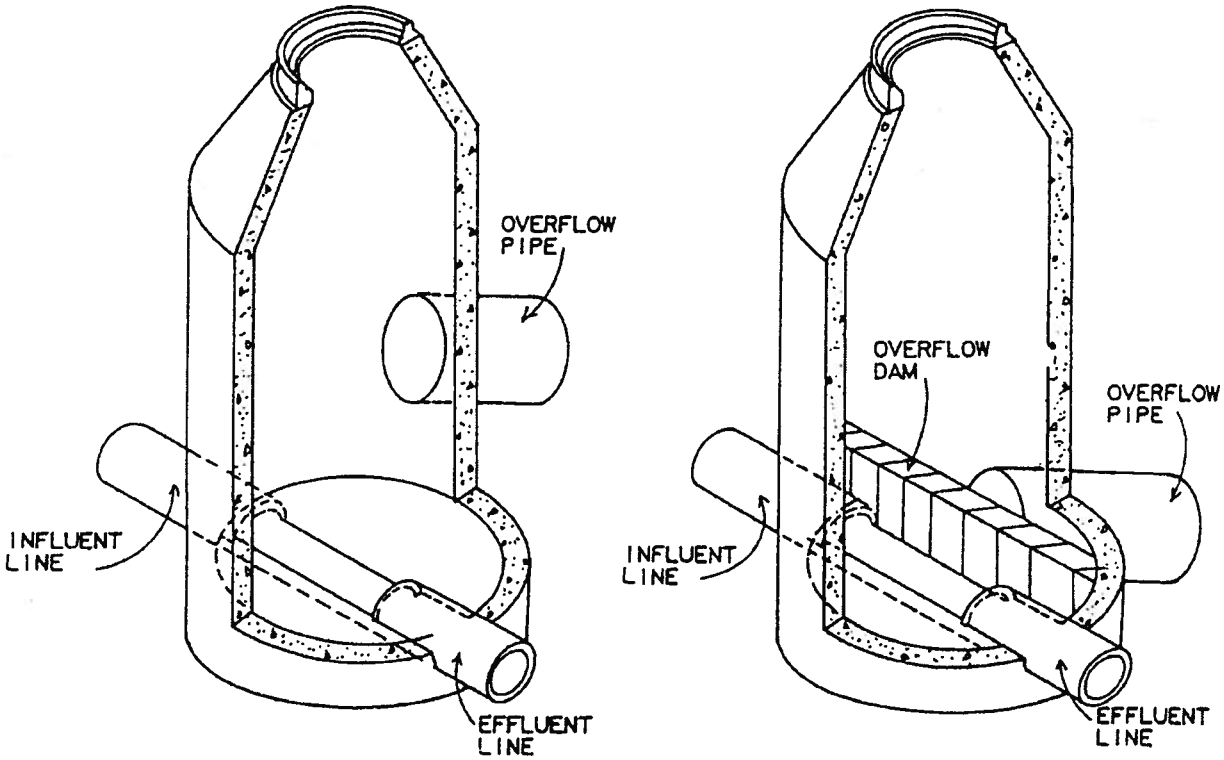

TYPE "A" OVERFLOW PIPE

TYPE "B" OVERFLOW DAM

Table 1
KNOWN SANITARY SEWER OVERFLOW LOCATIONS

SSO Number	Description
222	Intersection of Connecticut Court and Connecticut Avenue
225 A	Intersection of Middleton Avenue and Rawson Woods Lane
228	Intersection of Kennedy , Iris and Dante Avenues
530	6309 Betts Avenue
531	Intersection of Goodman and Bake Avenues
565	9590 Kemper Road, across Polk Run Creek
567	6936 Grace Avenue
568	Intersection of W. Galbraith and Gloria Avenue
569	Intersection of W. Galbraith and Rob Vern Avenue
570	Intersection of Euclid and Maple Avenues
572	406 Elliott Avenue
574	2014 Carpenter Avenue
576	Intersection of Swift and Attica Avenues
577	Sterling Avenue
579	Intersection of Richmond and Orchard Avenues
585	1273-79 Norman Avenue
587	11460 Rose Lane
588	6963 Salem Avenue
589	6778 LeConte Avenue
590	3332 W. Galbraith, west of Cella Avenue
591	Intersection of Euclid and Laurel Avenues
593	Intersection of Savannah and Catalpa Avenues
597	6929-33 Leboiteaux Avenue
600	Intersection of Plainfield Road and Schenck Avenue
601	Intersection of Plainfield Road and Hoffman Avenue
603	8879 Plainfield Road
607	O'Leary Avenue, east of May Street
608	Intersection of Southside and Dawson Avenues
611	Intersection of Hamilton and Catalpa Avenues
612	Hamilton Avenue, south of the Lakeknoll Apartments
620	9094 Eldora Drive, down the hill behind the house near Cooper Creek
623	East of intersection of Viscount and Delhi Pike
625	Intersection of Davis and Rolef Avenues
628	Pippen Road, north of Adams
634	intersection of W. Galbraith and Parrish Avenues
639	1276 Compton Road, near the creek

SSO Number	Description
640	3001 Shadycrest Court, behind house near the creek
641	Intersection of Beechmeadow Lane and Ralph Avenue, near creek
645	Intersection of Middleton and McAlpin Avenues
646	Intersection of Linden and Larchmont Avenues
647	Behind 9600 Ross Avenue, near the creek
675 A	Muddy Creek at Anchor Cove Marina, west side
676 P	Muddy Creek Pump Station Outlet Chamber, south of Rte 50
677 P	Rte 50, opposite Martha Avenue, under railway overpass
679 A	6501 Park Avenue, behind the house
679 B	6500 Mariemont Avenue, behind house down the hill
680	Southeast of the intersection of Wooster Pike and Park Avenue
681	9201 Blue Ash Road
682	9304 Blue Ash Road
684	6101 Stewart Road, near the bridge
690	First MH east of Polk Run WWTP
692	Lowland Road, near Anchor Cove Marina
697	Hillside Road Ballfields, near western edge of the fields
699	Railroad Avenue, in parking lot of the Arthritis Foundation
700	Behind the Ohio Asphalt Company, near Mill Creek
701	Intersection of River and Bender Roads, in Rapid Run Creek
704	8811 Tudor Avenue
705	9512 Main Street
730 P	Addyston @ Mistletoe Avenue, 50' north of Rte 50
747 P	Placid Meadows @ 529 Covedale
773 P	Glenview @ 3999 Virginia Court
790 P	Arrowhead Court @ 9096 Arrowhead Court
794 P	Greenpine Acres @ 2068 Persimmon Court
798 P	Marview Terrace @ 611 Marview Terrace
799 P	Millbrook #1 @ 736 Woodfield Road
805 P	Winton Road #1 @ Winton Road, 150' south of Corbett Road
851 P	Berkely Woods @ 6291 Stirrup Road
852 P	Brittney Acres @ 8100 Woodruff Road
856 P	High Meadows @ 6805 High Meadows Drive
861 P	Prospect Woods @ 1189 Hawkstone Drive
1000	South of the intersection of Attica and Grover Hill Avenues
1001	Intersection of East Benson and Hill Street
1002	Intersection of Bake and DeArmand Avenues
1003	7131 Hamilton Avenue
1005	1834 Sundale Avenue

SSO Number	Description
1008	Intersection of Euclid and Miami Avenues
1009	Intersection of Davis and Williams Avenues
1010	Intersection of Elm and Mulberry Avenues
1012	5988 Lawrence Avenue
1014	Chase Creek, south of Juniperview Avenue
1017	7907 Euclid Avenue
1020	Intersection of Heile Drive and Hunt Road
1022	8345 Greismer Avenue
1023	4021 Matson Avenue
1024	1835 Dallas Avenue
1025	West High Street, in the woods near the creek
1029	#5 Sylvan Drive, behind the house near the creek
1032	Intersection of Losantiville and Cedarbrook Avenues
1042	1483 Balfour Avenue, behind the house near creek
1043	225 W. Galbraith, south of employee parking lot
1044	6280-82 Witherby Avenue
1045	Intersection of Cooper and Crescent Avenues
1046	McGrew Avenue, at end of street
1047	Intersection of Park and Harmony Avenues
1048	Intersection of Glensprings and Springfield pike
1049	10290 Montgomery Road
1050	9169 Tag Avenue
1051	3312 Main Street, Addyston
1052	First MH outside Sycamore WWTP
1053	Temporary outfall, Camargo Road Phase 1
1054	Mariemont Swim Club

Monitoring Schedule

Due to the widespread nature of the overflow locations, the monitoring list for each month was divided into two routes. One route covered the eastern portion of the county while the second covered the western portion of the county. Each route requires approximately one day to complete.

Table 2 presents the monitoring rotation. It should be noted that only a representative sample of the pumping stations which lack standby power are being monitored. The Wastewater Treatment Division maintains a telemetry system to monitor the pump station activity. The reporting of sanitary sewer overflows at the pump station is addressed in the Wastewater Treatment Division O&M Plan.

TABLE 2

MONITORING LIST
(DFFO LIST AND ADDITIONAL SITES)

ROUTE 1 (West Route)		ROUTE 2 (East Route)	
639	567	603	625
612	597	* 579	1009
634	531	565	1043
577	1002	* 591	1000
530	1024	* 620	1032
641	1005	* 700#	607
623	593	572	1023
* 701	611	699	601
677P	222	645	600
1045	1044	225-A	1001
1029	574	* 608	1020
646	568	* 570	704
1010	569	* 228	682
1048	640	* 576	681
1047	590	684	705
587	773P	679-B	647
805P	1012	680	1049
799P	1025	679-A	690
798P	747P	* 851P	1052
790P	697	* 861P	1008
794P	692	* 589	1014
628	675-A	* 856P	1017
1050	676P	* 588	1053
1003	730P	* 852P	1054
1042	1051		
585	* 700#		
1022			

NOTES: * - Denotes location identified by OEPA DFFO's
- Site monitored on both East and West route
P - Denotes pump station locations

3.0 Monitoring Methods

Five methods are currently used in monitoring the overflow stations. These methods include: (1) fluorescent powdered chalk; (2) wooden floats with rope; (3) surcharge indicators; (4) specialized monitoring devices; and (5) visual observations. Of these methods, visual observation is the only method which affords 100% reliability in determination of a overflow occurrence. A detailed explanation of each method and situations in which they are utilized follows.

Fluorescent Chalk Method

This method involves the use of dry, powdered chalk commonly used for chalk lines. For purposes of reliability, fluorescent orange chalk is used due to its high visibility under poor lighting conditions. The chalk is used in locations where the manhole involved experiences no significant problems with inflow or infiltration through the manhole lid or within the manhole structure which could prove detrimental to the accuracy of this method. Most instances involving the use of chalk occur where a bypass pipe is present and easily accessible or where an overflow dam is present. A liberal portion of chalk is spread over as large an area as possible either within the bypass pipe or atop the overflow dam. Positive discharge is noted when the chalk was either partially or entirely erased.

Wooden Float Discharge Indicators

A second method of monitoring utilized is wooden floats. These discharge indicators consists of small sections of 2 inch by 4 inch wood cut into approximately four (4) inch lengths with a medium sized eye bolt screwed into the wood. An attachment line is tied to the bolt and is attached within the manhole to prevent loss of the float device. These floats are very sturdy and are not easily moved by animals. In some instances the floats are placed in the same areas as the fluorescent chalk to confirm results from the chalk. The monitoring floats are attached to an adequate length of rope or line to allow for significant movement of the float and for retrieval and reuse. The monitoring floats are periodically replaced depending on the conditions in each SSO location. Positive discharge is noted when float movement or removal indicated a positive overflow occurrence. Also, the presence of debris or evidence of discharge on the float or attachment line is used as a positive indicator in making an accurate determination.

Manhole Surcharge Indicators

This method is used in locations where previously discussed methods were found to be inadequate in providing data for accurate discharge determination. It is also used in combination with other monitoring methods. The surcharge indicators are placed in manholes where a bypass pipe is present and of sufficient height to allow for their use. The indicator is placed in the manhole such that positive identification of any surcharge may be obtained and the elevation of the surcharge can be estimated to determine potential for an overflow event. The bottle gauges are effective in obtaining additional monitoring data.

Specialized Monitoring Devices

This method of monitoring utilizes devices which are customized to a particular site to ensure the accuracy of discharge determination. These devices are used in SSOs which are a combination of Type "A" and Type "B" overflow manhole (see Figure 2), and cannot be monitored with the use of conventional monitoring devices. These devices are engineered specifically to optimize the collection of data and not to interfere with the operation of the site. Examples of such devices include float mechanisms which indicate the level of manhole surcharge and can be reset after each use.

These types of monitoring devices are also used if there is an abundance of animal movement or other conditions, such as excessive dampness in particular manholes. These conditions may adversely affect the accuracy of other monitoring methods. These devices are constructed for the unique sites and are upgraded periodically to ensure appropriate monitoring data.

Visual Observation

Visual observation is used in combination with all monitoring methods and is valuable in aiding the monitoring crew while assessing each location. The site inspection includes determination of the manhole condition, presence of debris in the manhole, evidence of surcharge, and estimated flow in the sewer system. These items are taken into consideration along with the monitoring indicator when determination of a discharge occurrence is made. On occasion, the monitoring crew may visually observe discharges as they occur. These visual confirmations may occur while monitoring either during extremely heavy rain events or immediately following such rain events.

4.0 Communications and Reporting

Daily Communications

The monitoring crew conducts site inspections daily and provides ongoing communications to various MSD staff. When the monitoring crew observes a site to be discharging, WWC staff are contacted immediately. When inspections are performed during extended wet weather conditions, calls are placed periodically after groups of sites are inspected. This communication allows prompt response to address problems if necessary.

At the completion of the monitoring route, monitoring results for all locations are reported to the WWC staff and results for the pump station locations are reported to the Wastewater Treatment Division. The information communicated includes a synopsis of discharge activity observed during the site inspections.

Notification and Reporting of All Field-Verified SSOs Except SSOs at "Enumerated Locations" Due to Capacity-Related Wet Weather Events; and Reporting of Basement Backups

MSD will provide timely notice to OEPA for all field-verified SSOs, except those from "Enumerated Locations" due to capacity-related wet-weather events. Except during wet weather events, timely notice to OEPA shall be electronic, within 24 hours of when MSD becomes aware of an SSO. During wet weather events, timely notice to OEPA shall be electronic, within 48 hours of when MSD becomes aware of an SSO, unless the SSO presents an imminent risk to public health, in which case MSD shall provide notice within 24 hours.

For all field-verified SSOs, except those from "Enumerated Locations" due to capacity-related wet weather events, MSD will provide written

notice to OEPA within 5 days. For any such SSO not halted in 48 hours, MSD will provide a verbal update to the Ohio EPA using the 24-hour hotline and shall provide OEPA a separate status report every 5 days. Notice will include: known or suspected cause of the SSO; whether the SSO was caused by any failure to follow the O&M Program or the Pump/Lift Station O&M Procedures; whether any failure to comply with the O&M Program or the Pump/Lift Station O&M Procedures contributed to the volume or the duration of the SSO; whether MSD followed its SSO Response Plan in responding to and mitigating the impact of the discharge; best estimate of volume released; description of source/point of overflow; location; date(s)and estimated duration of overflow; ultimate destination of overflow; any applicable corrective actions to prevent future overflows; weather condition, and identity of person(s) making the report.

For SSOs from enumerated locations due to capacity-related wet weather events, MSD shall report the SSO [including best estimate of volume released; description of source/point of overflow; location; date(s) and duration of overflow; ultimate destination of overflow; any applicable corrective actions to prevent future overflows; and identity of person(s) making the report], if: 1) the SSO was caused by MSD's failure to comply with the O&M Program/the Pump/Lift Station O&M Procedures, or if MSD's failure to comply with the O&M Program/the Pump/Lift Station O&M Procedures contributed to the volume or duration of the SSO, or 2) MSD failed to follow its SSO Response Plan in responding to and mitigating the impact of the discharge. MSD shall also provide to USEPA on a quarterly basis a copy of the monthly summary report in accordance with 1992 Ohio EPA's DFFO, which is currently in place.

In addition, for known releases to or wastewater backups into buildings, MSD will summarize all known information and submit it to OEPA in a monthly report.

MSD will provide both OEPA and the County Health Department with monthly reports which summarize all of the above reporting.

Two sample forms are provided illustrating External (OEPA) and Internal (MSD) reporting.

SAMPLE
SEWER OVERFLOW REPORT (EXTERNAL)

1. Spill Location/Address: _____

   _____

   Spill Location/MH#: _____

2. Spill source/point of overflow description: _____

   _____

3. Known or Suspected cause of spill: _____

   _____

   _____

(describe conditions surrounding spill , e.g., power failures, equipment breakdown, broken line, etc.)

4. Spill destination (stream name): _____

5. Weather conditions: _____

6. Spill date(s)/estimated duration/estimated volume (if known):

FROM (M/D/Y)				
TIME:				
TO (M/D/Y)				
TIME:				
ESTIMATED DURATION				
ESTIMATED VOLUME				

7. Any corrective actions to prevent future overflows: _____

   _____

8. Spill due to failure to follow "MSD WWC Operations and Maintenance Program"?

   ☐ Yes ☐ No

If **YES**, state reason:

_____

SAMPLE
SEWER OVERFLOW REPORT (EXTERNAL) (continued)

9. Spill volume/duration due to failure to follow "MSD WWC Operations and Maintenance Program"? ☐ Yes ☐ No

If **YES**, state reason:

_____

10. "MSD WWC Sewer Overflow Response Plan" followed for:

SPILL RESPONSE ☐ Yes ☐ No
SPILL MITIGATION ☐ Yes ☐ No

If **NO**, state reason:

_____

11. Person making this report: _____DATE: _____

SAMPLE
SEWER OVERFLOW REPORT (INTERNAL)

1. Request for Service No. _____
2. Location/Address _____
   _____
   _____
3. Phone Number _____
4. Has spill entered waters of the State ☐ Yes ☐ No
5. If yes, list receiving stream _____
6. Has Superintendent been notified? ☐ Yes ☐ No
7. Ohio EPA - Spill Hotline notified ☐ Yes ☐ No
8. If yes, state time and date _____
9. Is problem the responsibility of MSD ☐ Yes ☐ No
10. If no, list jurisdiction of responsibility.
    ☐ Private Property Owner _____
    ☐ Private Sewer _____
    ☐ Other _____
11. Is signage necessary? ☐ Yes ☐ No
12. Has Health Department been contacted? ☐ Yes ☐ No
13. If yes, state which Health Department.
    ☐ City/Cities _____
    ☐ County _____
14. Is a follow-up visit recommended? ☐ Yes ☐ No
15. If the problem resulted in a water-in-basement incident, did MSD provide courtesy information to property owners? ☐ Yes ☐ No
16. Describe maintenance actions taken to prevent reoccurrence

_____

_____

Enumerated SSO Weekly Health Department Reporting

In compliance with the Ohio EPA Director's Final Findings and Orders, the appropriate Hamilton County and/or local health department shall be notified of SSO activity. The Hamilton County Health Department is notified of discharge activity from all known SSO locations within Hamilton County. If an SSO is located within the jurisdiction of a local and/or city health agency, that entity is also notified of discharge activity within its respective jurisdiction. The health departments are notified through a weekly summary letter listing the SSO locations within their respective jurisdiction that exhibited evidence of discharge during the previous week. Correspondence is addressed to a specific contact person(s) of each Agency of Record. An example of the notification letter is included as Exhibit A on the following page.

EXHIBIT A

Date

Mr. _____
Health Commissioner
Hamilton County Health Department
250 William Howard Taft Road, 2nd Floor
Cincinnati, Ohio 45219

Re: Sanitary Sewer Overflows
Ohio EPA Director's Final Findings and Orders
Notification to Local Health Department

Dear Mr. _____:

In reference to the letter dated September 14, 1992, regarding notification of sanitary sewer overflows to the Hamilton County Health Department, this letter is in accordance with the Ohio EPA Directors Final Findings and Orders issued by the Ohio EPA to the Board of Hamilton County Commissioners.

Location was found to have had a positive discharge occurrence during the period of

_____ to _____.

SSO NO. LOCATION

If you have any questions regarding this matter, please contact

_____ at
_____.

Very Truly Yours,

Signature

Enumerated SSO Monthly Reporting

In accordance with the Ohio EPA Director's Final Findings and Orders, discharge data is reported to Ohio EPA in a monthly report. The monthly report is issued to Ohio EPA-SWDO for the preceding month and contains a synopsis of the daily monitoring information for the month. The report also includes a summary of rainfall information for rain gages in the vicinity of each group of SSO locations. The report is formatted to include a group of rain gage locations with the corresponding SSO locations. This allows the reader to compare SSO activity with rainfall data in the immediate vicinity of the respective locations. A reproduction of the report format is included as Exhibit B on the following page.

Exhibit B

MSD of GREATER CINCINNATI
SANITARY SEWER OVERFLOW REPORT : DATE
PRIMARY RAIN GAGE : # - LOCATION
SECONDARY RAIN GAGES : # - LOCATION, # - LOCATION

DAY	R.G. #	R.G. #	R.G. #		SSO NO.	SSO NO.								
1														
2														
3														
4														
5														
6														
7														
8														
9														
10														
11														
12														
13														
14														
15														
16														
17														
18														
19														
20														
21														
22														
23														
24														
25														
26														
27														
28														
29														
30														
31														

ADDITIONAL REMARKS :
0 - NO DISCHARGE
0* - DISCHARGE ESTIMATED NOT TO HAVE OCCURRED ON THIS DAY
AH - EVIDENCE OF DISCHARGE EXISTS, HOWEVER EXACT DATE UNKNOWN
POS. - DISCHARGE OBSERVED DURING SITE INSPECTION
X - MONITORING DEVICE DISTURBED, NO INDICATION OF OVERFLOW
- DATE SITE WAS MONITORED