US EPA ARCHIVE DOCUMENT

UNIVERSITY OF MASSACHUSETTS
AMHERST

N414 Morrill Science Center
Box 35710
Amherst, MA 01003-5710

Environmental Health and Safety

April 14, 1998

James Miller, Chief, Waste Branch
Department of Environmental Protection

Small-Scale Treatment Examples

Dear Jim:

Following up on the XL meeting in Florida, I've attached some requested examples of the treatment procedures we would likely employ under our Small-Scale Treatment component of the XL proposal. We use the gas manifold system now to check small cylinders that enter the waste stream or where a researcher asks for assistance with a cylinder. We believe that the proposed EMS protocol for our component will meet the highest standards for safety and pollution control process reviews. The expertise of the protocol reviewing teams is very high. We believe the described chemical process system exceeds many of the standards existent in the manufacturing or commercial waste treatment sectors. Many of the methods we would use are standard practices, and, where modified, are enhanced from the safety/pollution control perspective.

We look forward to your review and the opportunity to address any questions.

Sincerely yours,

Jim

James P. Fox, Manager
Hazardous Waste Management Services

Cc: D. Robinson
T. Balf, ML Strategies

Enc.: 1. Proposed compressed gas general testing/treatment SOP.
2. Compressed gas manifold flow diagram
3. Chlorine treatment procedure
4. Sulfur dioxide treatment procedure

The University of Massachusetts is an Affirmative Action/Equal Opportunity Institution

University of Massachusetts Amherst
Student Affairs
Environmental Health and Safety

PROPOSED STANDARD OPERATING PROCEDURES FOR TESTING AND TREATMENT OF SELECTED GASES
(Underlined text is applicable to treatment)

LABORATORY COMPRESSED GAS CYLINDERS

Disposal of compressed gas cylinders can be problematic and expensive. Prior to treatment/disposal, the generator is responsible for knowing the contents of the cylinder and that the cylinder and valve assembly are in operable condition. This procedure will ensure that the valve is operable and determine if the cylinder is RCRA-empty and eligible for metal recycling or if sufficient quantity of product exist in this cylinder to place it into the reuse and exchange program.

As a large quantity generator of hazardous waste, we are not allowed to treat our waste without permission from DEP by special exemption or permit. If, however, these cylinders are determined to be RCRA-empty, we can treat and purge the residual contents, rendering the cylinder safe for metal recycling. Our determination of RCRA-empty is cylinder pressure less than 25 psig for compressed gases, or less than three percent of the net weight for liquefied compressed gases. If there is content and it meets the specified criteria, the proposed procedure specifies the method for treatment of the contents to render it non-hazardous.

OPERATIONS

Conduct all operations with the gas manifold within an approved operating fume hood.

Conduct all operations involving gas hydrolysis with a minimum of two qualified personnel.

Cylinders will be visually inspected for structural integrity of all components prior to attaching to manifold. This includes signs of heavy corrosion of the cylinder body or valve, added plumbing to the original valve, any written warnings, etc.

Assess each cylinder for contents and condition before operation. Prepare a written procedure for treating or capturing the contents before testing (in the event of a leak or for an approved treatment.)

Set up the manifold apparatus as shown in the flow diagram.

Attach the cylinder to the gas manifold, ensuring a proper cylinder valve adapter.

Purge the system with nitrogen (N_2) to remove residual air and moisture. Pressure test the gas manifold at 300 psig with N_2 for five minutes prior to opening the cylinder valve to ensure that all connections are "gas tight".

With all other valves in the system shut, carefully open the cylinder valve.

If system appears to be tight, open valve to the high pressure gauge. If gauge indicates "0" or low pressure (<100 psig), open the low pressure gauge.

Care should be taken (especially with the corrosive gases) if no pressure is indicated. The valve on the cylinder may be blocked. See below for procedure.

Carefully bring the pressure up on the gauge with nitrogen. If the cylinder is empty, charge the cylinder to 300 psig with N_2 to purge the contents.

Shut off the N_2 feed and slowly bleed the residual contents and N2 through the flow meter to the treatment train. Observations on the volume of N_2 bled through the flow indicator will indicate if the cylinder valve is obstructed or not.

If the valve is obstructed, repeatedly charge the valve head with N_2 in an attempt to dislodge the obstruction. If all attempts to clear the valve fail, the valve must be considered suspect. Remove the cylinder with the isolation valve still attached from the gas apparatus. This will act as a backup shutoff valve. Label the cylinder, "faulty inoperable valve".

If purging the cylinder is successful, repeat the step three (3) times. Remove the cylinder from the manifold system and the valve in the hood. Rinse the inside of the cylinder with a compatible solvent and transfer to metal recycling.

Add the following data to the cylinder database: cylinder size, contents, condition, weight, and treatment procedure, if applicable.

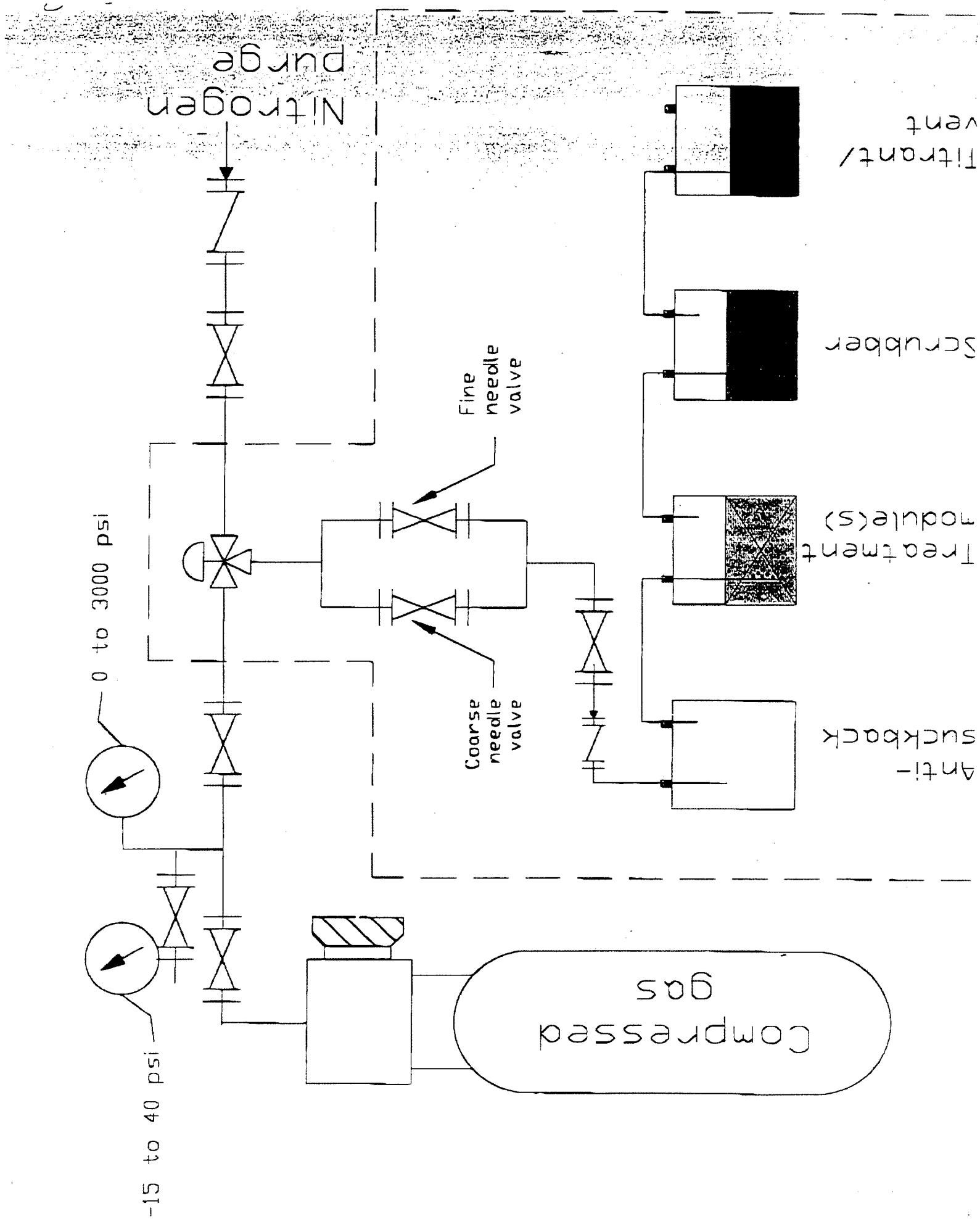
Nitrogen purge
Filrant/ vent
Scrubber
Treatment module(s)
Anti-suckback
Fine needle valve
Coarse needle valve
0 to 3000 psi
-15 to 40 psi
Compressed gas

Treatment Procedure for Chlorine

Chlorine is a corrosive gas with irritating odor usually stored in steel cylinders under its own vapor pressure.

Physical Properties of Cl_2

Properties	Cl_2
Molecular Weight	70.906
Vapor Pressure @ 21.1°C, psig	85.3
Boiling Point @ 1 atm, °C	-34.05
Freezing Point @ 1 atm, °C	-100.98
Density, Liquid @ -36 °C, g/ml	1.468**
Density, Gas @ 0 °C, 1 atm, g/l	3.214
Critical Temperature, °C	144
Critical Pressure, atm	76.1
Solubility in Water @ 20 °C, 1 atm	7.30 g/l

The safe disposal of chlorine can be accomplished by bubbling the gas through a scrubber train containing 15% aqueous solution of sodium hydroxide. The following reaction will occur:

$$Cl_2 + 2NaOH = NaCl + NaClO + H_2O.$$

The resulting products are stable salts presenting no danger, and can be disposed of in the sanitary sewer.

The treatment is performed using a specially designed gas handling system (see attached diagram) and a hydrolysis scrubber train. The scrubbers are filled with 15% sodium hydroxide solution with 5 drops of phenolphthalein indicator added. The scrubbers are placed in containers filled with cold water for a heat sink. The output test solution contains a few drops of litmus indicator to control the completeness of gas absorption. Chlorine flow is set at a rate when no sodium hydroxide solution is drawn back into the anti-suckback reservoir and at the same time the bubbling rate at the second scrubber is low; and no test solution color change is observed (which means adequate absorption of the gas). The gas bubbling is continued until the pink color of the scrubbing solution disappears, which means complete neutralization of the scrubbing solution.

When the cylinder is completely discharged, it should be flushed with nitrogen. After valve removal, the cylinder should be flushed with water.

References.

Matheson Gas Data Book, Matheson Gas Products, 1971.

Treatment Procedure for Sulfur Dioxide

Sulfur dioxide is a corrosive gas with irritating odor usually stored in steel cylinders under its own vapor pressure.

Physical Properties of SO_2

Properties	SO_2
Molecular Weight	64.063
Vapor Pressure @ 21.1°C, psig	34.4
Boiling Point @ 1 atm, °C	-10.0
Freezing Point @ 1 atm, °C	-75.5
Density, Liquid @ b.p., g/ml	1.46
Density, Gas @ 0 °C, 1 atm, g/l	2.927
Critical Temperature, °C	157.5
Critical Pressure, atm	80.4
Solubility in Water @ 20 °C, 1 atm	10.14% (wt)

The safe disposal of sulfur dioxide can be accomplished by bubbling the gas through a scrubber train containing 15% aqueous solution of sodium hydroxide. The following reaction will occur:

$$SO_2 + 2NaOH = Na_2SO_3 + H_2O$$

The resulting products are stable salts presenting no danger, and can be disposed of in the sanitary sewer.

The treatment is performed using a specially designed gas handling system (see attached diagram) and a hydrolysis scrubber train. The scrubbers are filled with 15% sodium hydroxide solution with 5 drops of phenolphthalein indicator added. The scrubbers are placed in containers filled with cold water for sinking the heat evolved during the reaction. The output test solution contains a few drops of litmus indicator to control the completeness of gas absorption. Sulfur dioxide flow is set at a rate when no sodium hydroxide solution is drawn back into the anti-suckback reservoir and at the same time the bubbling rate at the second scrubber is low and no test solution color change is observed (which means adequate absorption of the gas). The gas

bubbling is continued until the pink color of the scrubbing solution disappears, which means complete neutralization of the scrubbing solution.

When the cylinder is completely discharged, it should be flushed with nitrogen. After the valve removal, the cylinder should be flushed with water.

References.

Matheson Gas Data Book, Matheson Gas Products, 1971.