US EPA ARCHIVE DOCUMENT

80265

MOBAY CHEMICAL CORPORATION
AGRICULTURAL CHEMICALS DIVISION

Research and Development Department

TITLE: Analysis of ®BAYLETON and its Metabolites in Poultry Tissues and Eggs by Gas Chromatography/Mass Spectrometry

AUTHORS: J. F. Kruplak and B. Weissenburger

ABSTRACT: A procedure is described for the analysis of BAYLETON and all known metabolites, free or conjugated, in poultry tissues and eggs. The tissues are extracted using methanol in a Polytron blender. After vacuum filtration and rotary vacuum evaporation, the oily extract is partially cleaned up by passing it through XAD-4 ion exchange resin, eluting with methanol. Following concentration by rotary vacuum evaporation, the residue is hydrolyzed by refluxing with concentrated hydrochloric acid, which converts BAYLETON and metabolites to p-chlorophenol. The resulting phenol is steam distilled and further cleaned up by partitioning with acid and base followed by derivatization using 2,4-dinitrofluorobenzene. If necessary, the derivative is further purified by passing it through an alumina column. An internal standard of 3,4-dichlorophenol is added before derivatization and the samples are assayed using gas chromatography/mass spectrometry, monitoring the specific ions 127 or 294 (161 or 328 for internal standard) for primary or confirmatory analysis, respectively.

CONFIDENTIAL
PROPERTY OF
MOBAY CHEMICAL CORPORATION
AGRICULTURAL CHEMICALS DIVISION

DATE: November 18, 1981

APPROVED BY: D. R. Flint
D. R. Flint, Manager
Biochemistry Research

NOTEBOOK REFERENCE: 81-R-241

ADC Project # 638-A

BAYLETON is a Reg. TM of the Parent Company of Farbenfabriken Bayer GmbH, Leverkusen

80265

RESEARCH REPORT

ADC Project #638-A

BAYLETON TOTAL RESIDUE METHOD VERIFICATION
(POULTRY)

for

MOBAY CHEMICAL CORPORATION
Agricultural Division
P.O. Box 4913 - Hawthorn Road
Kansas City, MO 64120

CONFIDENTIAL
PROPERTY OF
MOBAY CHEMICAL CORPORATION
AGRICULTURAL CHEMICALS DIVISION

by

ANALYTICAL DEVELOPMENT CORPORATION
P.O. Box 429 - 1875 Willow Park Way
Monument, CO 80132

By: Joan F. Kruplak
Barbara Weissenburger

November 6, 1981

General Metobolic Pathway of Bayleton in An. ls

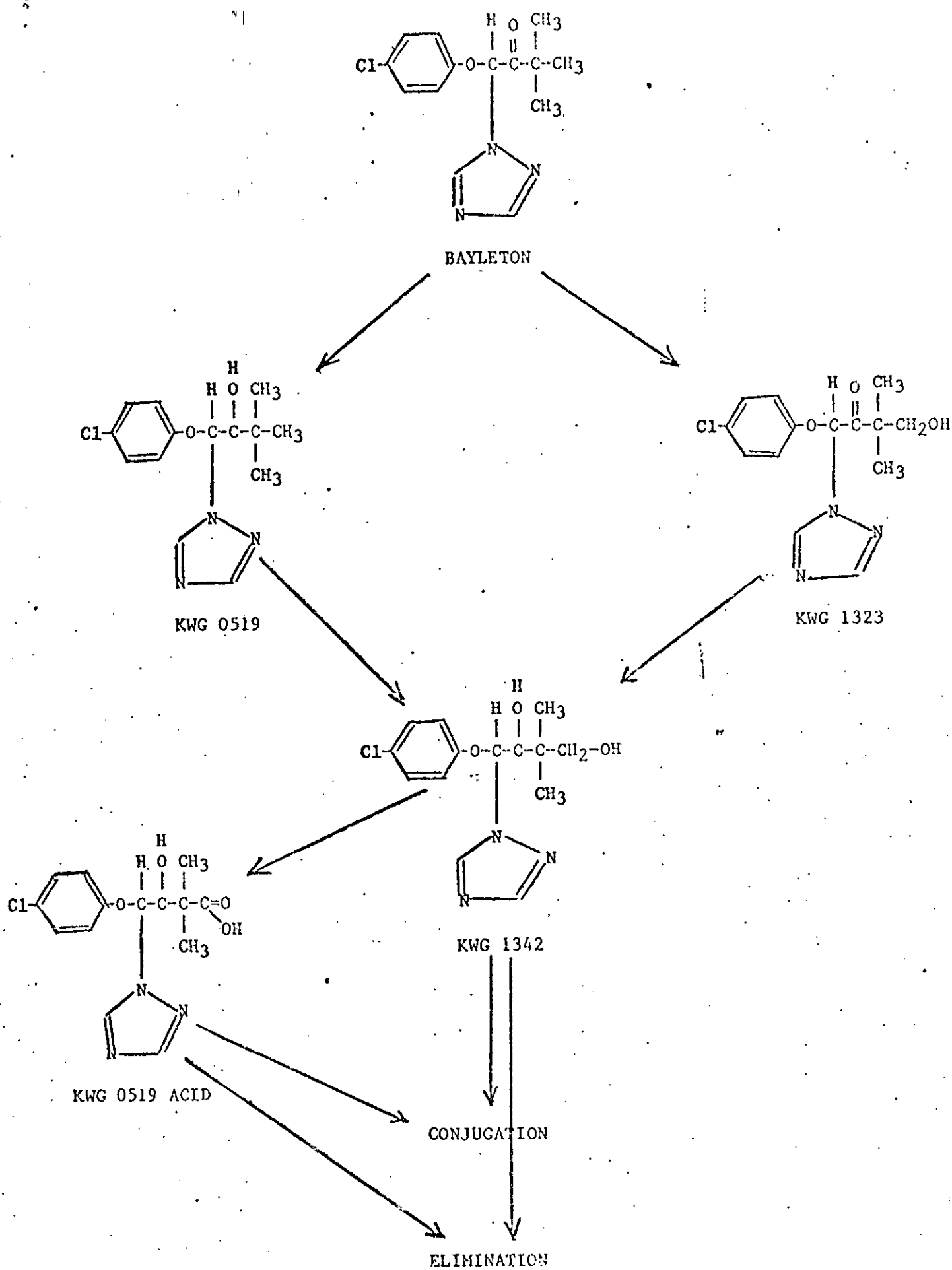

BAYLETON TOTAL RESIDUE METHOD VERIFICATION (POULTRY)

The following method has been validated for quantitation of total residues of Bayleton and metabolites in poultry liver, gizzard, muscle, fat, skin, and eggs.

I. EXTRACTIONS

A. Tissues

1. Samples, weighed into a 1-liter bottle, are polytron-extracted two minutes in 200 ml methanol.

liver	15 grams
skin	25 grams
muscle	25 grams
fat	25 grams
gizzard	10 grams

CONFIDENTIAL
PROPERTY OF
MOBAY CHEMICAL CORPORATION
AGRICULTURAL CHEMICALS DIVISION

2. Samples are vacuum filtered over Reeves-Angel glass fiber filter paper into a 500-ml flask. The extraction bottle and filter cake are rinsed twice with 25 ml methanol.

3. The combined extract and rinses are rotary-evaporated to dryness or oil in a 50°C water bath.

B. Egg

1. Fifty gram samples (combined white and yolk), weighed into a 1-liter bottle, are polytron-extracted two minutes in 200 ml methanol plus 25 gm Hyflo-Supercel.

2. The mixtures are vacuum filtered over Reeves-Angel glass fiber filter paper into a 500-ml flask. The extraction bottle and filter cake are rinsed twice with 25 ml methanol.

3. The combined extract and rinses are rotary-evaporated to ~5 ml aqueous volume in a 50°C water bath.

II. XAD COLUMN CHROMATOGRAPHY

A. Column Preparation

1. Tamp plug of glass wool into a 20 mm x 450 mm reservoir column. Fill to the bell with methanol.

2. Add XAD-4 (prewashed as in Section VIII) to the column to a height of 175 mm.

3. Drain methanol to top of XAD-4.

4. Fill column with D.I. H_2O and drain to top of XAD-4.

B. Chromatographic Procedure

1. To the residue remaining in the flask from Section I.A.3. or I.B.3. above, add 10 ml methanol plus 90 ml D.I. H_2O. Swirl flask and sonicate to dissolve residue as completely as possible. Apply to column and drain to top of XAD-4 at a 6 ml/min flow rate. Discard.

2. Rinse flask with 100 ml 90:10 D.I. H_2O: MeOH and apply to column. Drain to top of XAD-4 at a 6 ml/min flow rate. Discard.

3. Elute the column with 300 ml methanol at a 6 ml/min flow rate.

4. Gradually transfer eluant to a 250-ml flask while rotary evaporating solvent to dryness or oil in a 50°C water bath. (Azeotrope any remaining water by addition of 20-ml increments of acetonitrile followed by rotary evaporation until dryness is achieved.) Dissolve residue in 2 ml acetone.

C. Column Regeneration

Between each sample run, regenerate the XAD-4 column in the following manner:

Apply in Order:
100 ml acetone
200 ml hexane
100 ml acetone
200 ml methanol
200 ml D.I. H_2O — These steps constitute Section II-A, Column preparation.

CONFIDENTIAL

PROPERTY OF

MOBAY CHEMICAL CORPORATION
AGRICULTURAL CHEMICALS DIVISION

III. HYDROLYSIS AND DISTILLATION

Note: Aliquots of the 1.0 µg/ml Bayleton (in acetone) solution are started at this step for quantitation purposes.

PROPERTY OF

MOBAY CHEMICAL CORPORATION
AGRICULTURAL CHEMICALS DIVISION

skin, muscle, fat: 2.5 ml aliquot (corresponding to 0.1 ppm in a 25 gram sample)

liver: 1.5 ml aliquot (corresponding to 0.1 ppm in a 15 gram sample) plus 0.5 ml acetone

gizzard: 1.0 ml aliquot (corresponding to 0.1 ppm in a 10 gram sample) plus 1.0 ml acetone

egg: 0.5 ml aliquot (corresponding to 0.01 ppm in a 50 gram sample) plus 1.5 ml acetone

The appropriate acetone aliquots are transferred to a 250-ml flask for hydrolysis.

A. Hydrolysis of Total Bayleton Residues to para-Chlorophenol (PCP)

1. To the samples (step II.B.4.), and the appropriate quantitation standard, add 30 ml concentrated hydrochloric acid and two boiling stones.

2. Reflux under 500 mm Allihn water cooled condensers overnight (~16 hrs). Use of long condensers minimizes escape of HCl fumes and lessens resultant equipment damage.

3. At the conclusion of hydrolysis, unplug the heating mantles and allow the samples to cool to room temperature prior to disconnection from condensers. This minimizes loss of PCP as it is extremely volatile. Mark the volume level of each flask with an indelible marker.

B. Steam Distillation of PCP

1. Add 100 ml of D.I. H_2O to each flask through the condenser.

2. Disconnect the flasks from the condensers and interpose a distillation adapter between the reflux flask, the condenser, and a collection flask containing 15 ml 1N NaOH.

3. Heat to boiling and distill ~100 ml water over until the volume in the reflux flask returns to the pre-marked level (step III.A.3.). Unplug heating mantles.

4. Let samples cool to room temperature and rinse condenser with ~5 ml D.I. H_2O which is added to the distillate.

CONFIDENTIAL 80265

PROPERTY OF

MOBAY CHEMICAL CORPORATION
AGRICULTURAL CHEMICALS DIVISION

IV. PARTITION CLEANUP

A. DCM Partition and Sodium Bicarbonate Wash

1. Adjust pH of distillate to <2 (as determined by pH indicator sticks) with concentrated hydrochloric acid.

2. Transfer distillate to 250-ml separatory funnel and extract three times with 50 ml dichloromethane.[1] Discard distillate. Combine DCM extracts in 500-ml separatory funnel.

3. Wash combined DCM extracts with 100 ml 5% $NaHCO_3$.

4. Back extract aqueous with 50 ml DCM.

5. Combine all DCM fractions in a 500-ml separatory funnel and discard $NaHCO_3$.

B. Base and DCM Extractions

1. Extract combined DCM fractions three times with 100 ml 1N NaOH. Discard DCM.

2. Acidify combined aqueous fractions to pH <2 (determined by pH indicator sticks) with concentrated sulfuric acid. Use caution as sputtering will occur. Allow to cool to room temperature.

3. Extract acidified aqueous twice with 100 ml DCM. Do not collect <u>any</u> acid with the DCM fraction. Combine DCM extracts in a 250-ml flask and add 2 ml 0.5N NaOH to convert PCP to the less volatile sodium salt. Swirl to mix.

4. Remove DCM on a rotary evaporator using an unheated water bath. Remove all solvent (as indicated by smell) while maximizing aqueous residue. Allow to go to dryness if this is necessary to remove all traces of DCM. If required, add D.I. H_2O to samples to approximate a 2-ml volume.

Note: The internal standard is started at this step. Pipet 4 ml of a 4 µg/ml solution of 3,4-dichlorophenol in acetone into a flask. Add 2 ml of 0.5N NaOH and remove the acetone on a rotary evaporator using an unheated water bath. The internal standard is then treated as any other sample.

---

[1]Unless otherwise noted, all partitions involve 30 seconds of vigorous shaking.

CONFIDENTIAL
PROPERTY OF
MOBAY CHEMICAL CORPORATION
AGRICULTURAL CHEMICALS DIVISION

80265

V. DERIVATIZATION

A. Preparation of Derivatizing Solution

1. In a 250-ml separatory funnel, combine 15 ml acetone, 1.5 ml dinitrofluorobenzene (DNFB), and 150 ml 5% sodium tetraborate.[2]

2. Wash derivatizing solution three times with 100 ml hexane. Discard hexane.

B. Sample Derivatization

1. Add 10 ml of derivatizing solution to the residue from Section IV.B.4.

2. Stopper the flasks, swirl the contents, and place in a 50°C sand bath for 15 min.

3. Remove from sand bath and let cool to room temperature.

4. Transfer the sample to a 125-ml separatory funnel and extract three times with 10 ml iso-octane. Collect any emulsion with the iso-octane fraction.

5. Combine iso-octane extracts and wash twice with 15 ml 0.5N NaOH for 15 seconds followed by five washes with 10 ml D.I. H_2O for 15 seconds each. Any emulsions formed are not discarded with the aqueous washes but are kept with the iso-octane fraction. Discard all aqueous washes.

VI. ALUMINA COLUMN CHROMATOGRAPHY

A. Column Preparation

1. Tamp plug of glass wool into a 20 mm x 450 mm reservoir column. Fill to the reservoir with hexane.

2. Add 10 g 2% deactivated basic alumina (prepared as in Section VIII.A.1.). Let packing settle.

3. Add 5 g Na_2SO_4. Drain hexane to top of Na_2SO_4.

---

[2]These amounts result in enough derivatizing solution being prepared to derivatize 15 samples.

CONFIDENTIAL
PROPERTY OF
MOBAY CHEMICAL CORPORATION
AGRICULTURAL CHEMICALS DIVISION

80265

B. Chromatographic Procedure

1. Apply sample in 30 ml iso-octane (from Section V.B.5.) to basic alumina column at a 15 ml/min flow rate. Drain to top of Na_2SO_4 and discard.

2. Rinse sample flask 3 times with 10 ml hexane followed by 100 ml hexane. Apply each rinse to the column at a 15 ml/min flow rate, draining each rinse to the top of the Na_2SO_4 before applying the next. Discard all hexane.

3. Elute column with 250 ml 60:40 hexane: ethyl acetate at a 15 ml/min flow rate. Collect eluant for quantitation.

4. Rotary evaporate samples to dryness in a 40°C water bath.

5. Dilute internal standard in 20 ml hexane for tissues (to yield 0.8 µg/ml 3,4-dichlorophenol) or 40 ml hexane for eggs (to yield 0.4 µg/ml 3,4-dichlorophenol). Dilute samples as follows:

muscle, fat, skin > 1 ml internal standard solution

liver, gizzard, egg > 0.5 ml internal standard solution

VII. QUANTITATION BY GAS CHROMATOGRAPHY/MASS SPECTROMETRY

Instrument: Hewlett-Packard 5992A GC/MS System

Program: Selected Ion Monitor

Column:

Tissues - 4 ft x 2 mm 3% Dexsil 300 on 80/100 mesh Chromosorb W HP

Egg - 6 ft x 2 mm 3% Dexsil 300 on 80/100 mesh Chromosorb W HP

CONFIDENTIAL
PROPERTY OF
MOBAY CHEMICAL CORPORATION
AGRICULTURAL CHEMICALS DIVISION

Temperatures: Injector - Tissues 250°C
Egg 260°C

Oven - Tissues 240°C isothermal
Egg 250°C isothermal

Carrier Gas: Helium at 40 psi

Tissues - 25 ml/min
Egg - 35 ml/min

Solvent elute prior to voltage application:

Tissues - 2.3 minutes
Egg - 3.5 minutes

Ions monitored for primary quantitation:

127 - mass of parachlorophenol minus 1 hydrogen

161 - mass of 3,4-dichlorophenol minus 1 hydrogen

Ions monitored for confirmatory quantitation:

294 - mass of DNFB derivatized parachlorophenol

328 - mass of DNFB derivatized 3,4-dichlorophenol

Injection volume: 6-10 µl (dependent on daily sensitivity)

Retention times:

Tissues - DNFB derivative of PCP, ~3 minutes

DNFB derivative of 3,4-dichlorophenol, ~5 minutes

Egg - DNFB derivative of PCP, ~4.5 minutes

DNFB derivative of 3,4-dichlorophenol, ~7.5 minutes

VIII. REAGENTS AND GLASSWARE HANDLING

A. Reagents

1. Alumina Basic: Woelm Super 1 ICN
Activate overnight at 120°C prior to 2% deactivation with D.I. H_2O. Let stand overnight prior to use.

CONFIDENTIAL
PROPERTY OF
MOBAY CHEMICAL CORPORATION
AGRICULTURAL CHEMICALS DIVISION

2. Acetone: Fisher pesticide grade

3. Dichloromethane: Fisher pesticide grade

4. Dinitrofluorobenzene: Aldrich
Store in a dessicator at room temperature

5. Ethyl Acetate: Fisher pesticide grade

6. Glass Wool: Corning Pyrex
Heat at 400°C for 4 hrs prior to use

7. Hexane: Fisher pesticide grade

8. Hydrochloric Acid: Dupont electronic grade

9. Hyflo-Supercel: Fisher

10. Methanol: Fisher pesticide grade

11. Sodium Bicarbonate: Mallinckrodt 5% solution in D.I. H_2O (50 g/liter)

12. Sodium tetraborate: Baker Analyzed Reagent
5% solution in D.I. H_2O (50 g/liter)
Warm prior to use

13. Sodium Hydroxide: Mallinckrodt
a. 1N solution in D.I. H_2O (40 g/liter)
b. 0.5N solution in D.I. H_2O (20 g/liter)
Pre-extract each liter 2x200 ml DCM

14. Sodium Sulfate: Mallinckrodt
Heat at 400°C for 4 hrs prior to use

15. Sulfuric Acid: Dupont electronic grade

16. 2,2,4-trimethyl pentane (iso-octane):
Mallinckrodt Nanograde

17. XAD-4 Amberlite polymeric absorbent:
Rohm & Haas This must be pre-extracted prior to use by three successive 8 hour Soxhlet extractions with 300 ml methanol each time.

80265
CONFIDENTIAL
PROPERTY OF
MOBAY CHEMICAL CORPORATION
AGRICULTURAL CHEMICALS DIVISION

B. Standard Solutions

1. Stock Fortification Solutions

a. Bayleton - 1 mg/ml: Dissolve 10.0 mg of Bayleton in methanol and dilute to volume in a 10-ml volumetric flask.

b. KWG 0519 - mixed isomers - 1 mg/ml (Bayleton equivalent solution): Dissolve 10.1 mg of KWG 0519 mixed isomers in methanol and dilute to volume in a 10-ml volumetric flask.

c. KWG 1640 - mixed isomers - 1 mg/ml (Bayleton equivalent solution): Supplied as Acid I and Acid II. Dissolve 5.5 mg of each acid in 10 ml methanol and dilute to volume in a 10-ml volumetric flask.

d. KWG 1323 - 1 mg/ml (Bayleton equivalent solution): Dissolve 10.5 mg of KWG 1323 in methanol and dilute to volume in a 10-ml volumetric flask.

e. KWG 1342 - 1 mg/ml (Bayleton equivalent solution): Dissolve 10.6 mg of KWG 1342 in methanol and dilute to volume in a 10-ml volumetric flask.

Note: Bayleton equivalent weights used are based on molecular weight ratios.

2. Fortification Standards

Pipet 1 ml of the appropriate stock solution into a 10-ml volumetric flask and dilute to volume with methanol. This represents 100 µg/ml Bayleton equivalents of the appropriate standard.

a. Muscle, Skin, Fat

Pipet 2.5 ml of the appropriate 100 µg/ml standard into a 100-ml volumetric flask and dilute to volume with methanol. This represents 2.5 µg/ml Bayleton equivalents of the appropriate standard.

1.0 ml of the appropriate 2.5 µg/ml standard represents 0.1 ppm Bayleton equivalents in a 25 gm sample.

0.5 ml of the appropriate 2.5 µg/ml standard represents 0.05 ppm Bayleton equivalents in a 25 gm sample.

CONFIDENTIAL 80265
PROPERTY OF
MOBAY CHEMICAL CORPORATION
AGRICULTURAL CHEMICALS DIVISION

b. Liver

Pipet 1.5 ml of the appropriate 100 µg/ml standard into a 100-ml volumetric flask and dilute to volume with methanol. This represents 1.5 µg/ml Bayleton equivalents of the appropriate standard.

1.0 ml of the appropriate 1.5 µg/ml standard represents 0.1 ppm Bayleton equivalents in a 15 gm sample.

0.5 ml of the appropriate 1.5 µg/ml standard represents 0.05 ppm Bayleton equivalents in a 15 gm sample.

c. Gizzard

Pipet 1.0 ml of the appropriate 100 µg/ml standard into a 100-ml volumetric flask and dilute to volume with methanol. This represents 1.0 µg/ml Bayleton equivalents of the appropriate standard.

1.0 ml of the appropriate 1.0 µg/ml standard represents 0.1 ppm Bayleton equivalents in a 10 gm sample.

0.5 ml of the appropriate 1.0 µg/ml standard represents 0.05 ppm Bayleton equivalents in a 10 gm sample.

d. Egg

Pipet 0.5 ml of the appropriate 100 µg/ml standard into a 100-ml volumetric flask and dilute to volume with methanol. This represents 0.5 µg/ml Bayleton equivalents of the appropriate standard.

1.0 ml of the appropriate 0.5 µg/ml standard represents 0.01 ppm Bayleton equivalents in a 50 gm sample.

0.5 ml of the appropriate 0.5 µg/ml standard represents 0.005 ppm Bayleton equivalents in a 50 gm sample.

3. Quantitation Standards

Dissolve 10.0 mg of Bayleton in acetone and dilute to volume in a 10-ml volumetric flask. This represents a 1 mg/ml solution. Pipet 1 ml of the 1 mg/ml solution into a 10-ml volumetric flask and dilute to volume with acetone. This represents a 100 µg/ml solution. Pipet 1 ml of the 100 µg/ml solution into a 100-ml volumetric flask and dilute to volume with acetone. This represents a 1 µg/ml solution.

PROPERTY OF

MOBAY CHEMICAL CORPORATION
AGRICULTURAL CHEMICALS DIVISION

2.5 ml of this solution represents 0.1 ppm in a 25 gm sample (muscle, fat, skin).

1.5 ml of this solution represents 0.1 ppm in a 15 gm sample (liver).

1.0 ml of this solution represents 0.1 ppm in a 10 gm sample (gizzard).

0.5 ml of this solution represents 0.01 ppm in a 50 gm sample (egg).

4. Internal Standard

3,4-dichlorophenol - 1 mg/ml: Dissolve 10 mg 3,4-dichlorophenol in acetone and dilute to volume in a 10-ml volumetric flask. Pipet 1 ml of the 1 mg/ml internal standard stock solution into a 250-ml volumetric flask and dilute to volume with acetone. This represents a 4 µg/ml solution.

C. Glassware Handling

Glassware is washed in Alco-jet in a mechanical dishwasher. After normal rinsing and a D.I. rinse, glassware is dried with technical grade acetone. Immediately prior to use, glassware is rinsed with nanograde acetone. Rotovap stems are also rinsed with acetone prior to use. A 4 hr reflux in KOH saturated methanol is necessary to remove baked-on residue in hydrolysis flasks.

IX. CALCULATIONS

Area calculations of both analyte and internal standard are done by hand using the following equation:

$$\frac{\text{base of peak (mm)} \times \text{height of peak (mm)}}{2}$$

Sample injection sequence follows the order of standard, 2 samples, standard, etc. Samples are quantitated against the standard of closest proximity. Area ratios (area analyte ÷ area internal standard) are calculated for both the sample and standard. The ppm value of the sample is then calculated using the following equation:

$$\frac{\text{area ratio sample} \times \text{ppm level of standard}}{\text{area ratio of standard}} = \text{ppm level of sample}$$

ANALYTICAL DEVELOPMENT CORPORATION

By: Joan F. Kruplak
Joan F. Kruplak
Research Scientist

& Barbara Weissenburger
Barbara Weissenburger
Senior Research Technician

Approved by: George O. Breault
George O. Breault, Ph.D.
Director of Research

JFK:ge

CONFIDENTIAL
PROPERTY OF
MOBAY CHEMICAL CORPORATION
AGRICULTURAL CHEMICALS DIVISION

80265

APPENDIX I

PRIMARY QUANTITATION (IONS 127 AND 161) OF
BAYLETON AND METABOLITES IN POULTRY TISSUES AND EGG

CONFIDENTIAL
PROPERTY OF
MOBAY CHEMICAL CORPORATION
AGRICULTURAL CHEMICALS DIVISION

RECOVERY OF
BAYLETON AND METABOLITE FORTIFICATIONS FROM POULTRY - MUSCLE

			Peak Response															
			Sample							0.1 ppm Standard								
			Analyte			Internal Standard				Analyte			Internal Standard					
Sample	Compound Added	ppm Added (Bayleton Equivalents)	Base (mm)	Ht. (mm)	Area (mm^2)	Base (mm)	Ht. (mm)	Area (mm^2)	Ratio	Base (mm)	Ht. (mm)	Area (mm^2)	Base (mm)	Ht. (mm)	Area (mm^2)	Ratio	Net Residue (ppm)	% Recovery
Control Muscle*	--	0.00	0.0	0.0	0.0	12.0	76.0	456.0	0.00	7.5	59.5	223.1	11.5	45.5	261.6	0.85	<0.010	
Control Muscle	Bayleton	0.10	7.0	67.0	234.5	12.0	41.5	249.0	0.94	7.5	69.0	258.8	10.5	48.0	252.0	1.03	0.091	91
Control Muscle	Bayleton	0.05	7.0	54.0	189.0	12.0	61.0	366.0	0.52	7.5	69.0	258.8	10.5	48.0	252.0	1.03	0.050	100
Control Muscle	KWG 0519	0.10	7.5	60.0	225.0	12.0	36.5	219.0	1.03	7.5	66.0	247.5	10.0	51.0	255.0	0.97	0.106	106
Control Muscle	KWG 0519	0.05	7.0	53.0	185.5	11.5	70.0	402.5	0.46	7.5	66.0	247.5	10.0	51.0	255.0	0.97	0.047	94
Control Muscle	KWG 1640	0.10	8.5	44.0	187.0	13.0	48.0	312.0	0.60	7.5	75.0	281.2	12.5	75.0	468.8	0.60	0.100	100
Control Muscle	KWG 1640	0.05	8.5	28.0	119.0	12.5	80.0	500.0	0.24	7.5	75.0	281.2	12.5	75.0	468.8	0.60	0.040	80
Control Muscle	KWG 1323	0.10	7.5	77.0	288.8	13.5	48.5	327.4	0.88	8.0	80.5	322.0	12.0	70.0	420.0	0.77	0.114	114
Control Muscle	KWG 1323	0.05	7.0	58.0	203.0	13.0	84.0	546.0	0.37	8.0	80.5	322.0	12.0	70.0	420.0	0.77	0.048	96
Control Muscle	KWG 1342	0.10	7.5	56.0	210.0	13.0	40.0	260.0	0.81	7.5	71.0	266.2	12.0	60.0	360.0	0.74	0.109	109
Control Muscle	KWG 1342	0.05	7.5	49.0	183.8	12.5	80.0	500.0	0.37	7.5	71.0	266.2	12.0	60.0	360.0	0.74	0.050	100

*All samples 25 gm

CONFIDENTIAL
PROPERTY OF
MOBAY CHEMICAL CORPORATION
AGRICULTURAL CHEMICALS DIVISION

RECOVERY OF
BAYLETON AND METABOLITE FORTIFICATIONS FROM POULTRY - FAT

			Peak Response															
			Sample							0.1 ppm Standard								
			Analyte			Internal Standard				Analyte			Internal Standard					
Sample	Compound Added	ppm Added (Bayleton Equivalents)	Base (mm)	Ht. (mm)	Area (mm^2)	Base (mm)	Ht. (mm)	Area (mm^2)	Ratio	Base (mm)	Ht. (mm)	Area (mm^2)	Base (mm)	Ht. (mm)	Area (mm^2)	Ratio	Net Residue (ppm)	% Recovery
Control Fat*	--	0.00	7.5	5.0	18.8	12.5	68.0	425.0	0.04	7.5	70.0	262.5	12.0	31.0	186.0	1.41	<0.010	
Control Fat	Bayleton	0.10	8.0	75.0	300.0	12.0	34.0	204.0	1.47	7.5	76.0	285.0	12.0	34.5	207.0	1.38	0.104	104
Control Fat	Bayleton	0.05	9.0	61.5	276.8	12.0	74.5	447.0	0.62	7.5	76.0	285.0	12.0	34.5	207.0	1.38	0.042	84
Control Fat	KWG 0519	0.10	8.5	74.5	316.6	11.5	43.5	250.1	1.27	8.0	75.0	300.0	12.0	37.0	222.0	1.35	0.091	91
Control Fat	KWG 0519	0.05	8.0	62.5	250.0	12.0	66.5	399.0	0.63	8.0	75.0	300.0	12.0	37.0	222.0	1.35	0.044	88
Control Fat	KWG 1640**	0.10	8.5	59.5	252.9	11.0	82.5	453.8	0.56	6.5	75.0	243.8	13.5	57.5	388.1	0.63	0.086	86
Control Fat	KWG 1640**	0.05	8.5	34.5	146.6	11.5	78.5	451.4	0.32	7.0	75.0	262.5	13.0	66.5	432.2	0.61	0.049	98
Control Fat	KWG 1323	0.10	8.0	79.0	316.0	12.0	40.0	240.0	1.32	8.0	81.0	324.0	11.5	38.5	221.4	1.46	0.087	87
Control Fat	KWG 1323	0.05	8.5	68.0	289.0	12.5	65.0	406.2	0.71	8.0	81.0	324.0	11.5	38.5	221.4	1.46	0.046	92
Control Fat	KWG 1342	0.10	7.5	83.0	311.2	12.0	38.5	231.0	1.35	8.0	79.0	316.0	11.0	48.5	266.8	1.18	0.111	111
Control Fat	KWG 1342	0.05	9.0	55.5	249.8	12.5	83.0	518.8	0.48	7.5	86.0	322.5	12.5	48.5	303.1	1.06	0.042	84

*All samples 25 gm

**Repeat analysis

CONFIDENTIAL
PROPERTY OF
MOBAY CHEMICAL CORPORATION
AGRICULTURAL CHEMICALS DIVISION

80265

RECOVERY OF
BAYLETON AND METABOLITE FORTIFICATIONS FROM POULTRY - SKIN

			Peak Response															
			Sample							0.1 ppm Standard								
			Analyte			Internal Standard				Analyte			Internal Standard					
Sample	Compound Added	ppm Added (Bayleton Equivalents)	Base (mm)	Ht. (mm)	Area (mm²)	Base (mm)	Ht. (mm)	Area (mm²)	Ratio	Base (mm)	Ht. (mm)	Area (mm²)	Base (mm)	Ht. (mm)	Area (mm²)	Ratio	Net Residue (ppm)	% Recovery
Control Skin*	--	0.00	6.0	11.5	34.5	13.0	75.0	487.5	0.07	8.5	72.0	306.0	11.5	61.0	350.8	0.87	<0.010	
Control Skin	Bayleton	0.10	8.5	74.0	314.5	12.0	60.5	363.0	0.87	8.0	75.0	300.0	12.0	62.5	375.0	0.80	0.101	101
Control Skin	Bayleton	0.05	8.5	54.0	229.5	12.5	80.0	500.0	0.46	8.0	75.0	300.0	12.0	62.5	375.0	0.80	0.050	100
Control Skin	KWG 0519	0.10	8.5	79.0	335.8	11.5	65.0	373.8	0.90	8.0	76.5	306.0	12.0	63.5	381.0	0.80	0.104	104
Control Skin	KWG 0519	0.05	8.0	53.5	214.0	11.5	83.0	477.2	0.45	8.0	76.5	306.0	12.0	63.5	381.0	0.80	0.048	96
Control Skin	KWG 1640	0.10	8.5	77.0	327.2	12.0	85.5	513.0	0.64	7.5	76.5	286.9	12.5	75.0	468.8	0.61	0.097	97
Control Skin	KWG 1640	0.05	7.5	44.0	165.0	11.5	81.5	468.6	0.35	7.5	76.5	286.9	12.5	75.0	468.8	0.61	0.049	98
Control Skin	KWG 1323	0.10	7.0	80.0	280.0	12.0	62.0	372.0	0.75	8.0	77.5	310.0	12.5	74.5	465.6	0.67	0.104	104
Control Skin	KWG 1323	0.05	8.5	51.5	218.9	12.5	85.0	531.2	0.41	8.0	77.5	310.0	12.5	74.5	465.6	0.67	0.053	106
Control Skin	KWG 1342	0.10	8.0	78.0	312.0	12.0	78.5	471.0	0.66	7.5	80.0	300.0	12.5	79.0	493.8	0.61	0.100	100
Control Skin	KWG 1342	0.05	7.0	62.5	218.8	13.0	85.0	552.5	0.40	7.5	80.0	300.0	12.5	79.0	493.8	0.61	0.058	116

*All samples 25 gm

CONFIDENTIAL
PROPERTY OF
MOBAY CHEMICAL CORPORATION
AGRICULTURAL CHEMICALS DIVISION

RECOVERY OF
BAYLETON AND METABOLITE FORTIFICATIONS FROM POULTRY - LIVER

			Peak Response															
			Sample							0.1 ppm Standard								
			Analyte			Internal Standard				Analyte			Internal Standard					
Sample	Compound Added	ppm Added (Bayleton Equivalents)	Base (mm)	Ht. (mm)	Area (mm²)	Base (mm)	Ht. (mm)	Area (mm²)	Ratio	Base (mm)	Ht. (mm)	Area (mm²)	Base (mm)	Ht. (mm)	Area (mm²)	Ratio	Net Residue (ppm)	% Recovery
Control Liver*	--	0.00	7.5	7.0	26.2	12.0	81.0	486.0	0.05	8.0	70.0	280.0	12.0	43.5	261.0	1.07	<0.010	
Control Liver	Bayleton	0.10	6.5	85.0	276.2	12.0	35.5	213.0	1.30	9.0	72.0	324.0	11.5	52.0	299.0	1.08	0.115	115
Control Liver	Bayleton	0.05	6.5	66.5	216.1	12.0	52.0	312.0	0.69	8.0	74.0	296.0	11.0	53.0	291.5	1.02	0.063	126
Control Liver	KWG 0519	0.10	7.0	78.0	273.0	12.0	41.0	246.0	1.11	8.0	75.0	300.0	11.5	52.0	299.0	1.00	0.106	106
Control Liver	KWG 0519	0.05	7.0	60.0	210.0	12.0	60.0	360.0	0.58	8.0	75.0	300.0	11.5	52.0	299.0	1.00	0.053	106
Control Liver	KWG 1640	0.10	7.5	78.0	292.5	12.0	48.5	291.0	1.01	8.5	80.0	340.0	10.5	61.0	320.2	1.06	0.090	90
Control Liver	KWG 1640	0.05	8.0	53.5	214.0	11.5	89.0	511.8	0.42	7.5	84.0	315.0	11.5	60.0	345.0	0.91	0.041	82
Control Liver	KWG 1323	0.10	6.5	81.0	263.2	12.0	40.5	243.0	1.08	7.5	84.0	315.0	11.5	60.0	345.0	0.91	0.114	114
Control Liver	KWG 1323	0.05	7.5	70.0	262.5	12.5	67.5	421.9	0.62	8.5	83.0	352.8	11.5	57.5	330.6	1.07	0.053	106
Control Liver	KWG 1342	0.10	7.0	83.0	290.5	13.0	33.0	214.5	1.35	8.5	69.0	293.2	11.5	45.5	261.6	1.12	0.116	116
Control Liver	KWG 1342	0.05	7.5	73.0	273.8	12.5	74.5	465.6	0.59	8.0	86.0	344.0	10.5	61.0	320.2	1.07	0.050	100

*All samples 15 gm

CONFIDENTIAL
PROPERTY OF
MOBAY CHEMICAL CORPORATION
AGRICULTURAL CHEMICALS DIVISION

80265

RECOVERY OF
BAYLETON AND METABOLITE FORTIFICATIONS FROM POULTRY - GIZZARD

			Peak Response															
			Sample							0.1 ppm Standard								
			Analyte			Internal Standard				Analyte			Internal Standard					
Sample	Compound Added	ppm Added (Bayleton Equivalents)	Base (mm)	Ht. (mm)	Area (mm^2)	Base (mm)	Ht. (mm)	Area (mm^2)	Ratio	Base (mm)	Ht. (mm)	Area (mm^2)	Base (mm)	Ht. (mm)	Area (mm^2)	Ratio	Net Residue (ppm)	% Recovery
Control Gizzard*	--	0.00	7.0	2.5	8.8	16.0	89.0	712.0	0.01	10.5	64.5	338.6	16.5	51.5	424.9	0.80	<0.010	
Control Gizzard	Bayleton	0.10	11.0	82.0	451.0	16.0	63.0	504.0	0.89	10.5	71.0	372.8	16.5	55.5	457.9	0.81	0.109	109
Control Gizzard	Bayleton	0.05	10.0	51.5	257.5	15.5	94.0	728.5	0.35	10.5	71.0	372.8	16.5	55.5	457.8	0.81	0.042	84
Control Gizzard	KWG 0519	0.10	11.0	84.0	462.0	16.0	62.5	500.0	0.92	11.0	72.0	396.0	16.0	55.5	444.0	0.89	0.102	102
Control Gizzard	KWG 0519	0.05	10.5	63.0	330.8	16.0	91.0	728.0	0.45	10.5	76.0	399.0	15.5	61.5	476.6	0.84	0.053	106
Control Gizzard	KWG 1640	0.10	11.5	77.0	442.8	15.5	91.0	705.2	0.63	10.0	76.0	380.0	17.0	61.0	518.5	0.73	0.085	85
Control Gizzard	KWG 1640	0.05	10.5	44.5	233.6	16.5	85.0	701.2	0.33	10.0	76.0	380.0	17.0	61.0	518.5	0.73	0.044	88
Control Gizzard	KWG 1323	0.10	11.5	60.0	345.0	16.5	45.0	371.2	0.93	10.5	69.0	362.2	15.5	45.5	352.6	1.03	0.089	89
Control Gizzard	KWG 1323	0.05	9.5	74.0	351.5	16.5	89.0	734.2	0.48	10.5	69.0	362.2	15.5	45.5	352.6	1.03	0.046	92
Control Gizzard	KWG 1342	0.10	11.0	74.0	407.0	16.5	83.0	684.8	0.59	9.0	71.0	319.5	16.5	55.0	453.8	0.70	0.083	83
Control Gizzard	KWG 1342	0.05	11.5	40.0	230.0	15.0	88.5	663.8	0.35	9.0	71.0	319.5	16.5	55.0	453.8	0.70	0.049	98
--	Reagent Blank	--	0.0	0.0	0.0	15.5	62.0	480.5	0.00	9.5	77.0	365.8	14.5	55.0	398.8	0.92	<0.010	

*All samples 10 gm

CONFIDENTIAL
PROPERTY OF
MOBAY CHEMICAL CORPORATION
AGRICULTURAL CHEMICALS DIVISION

80265

RECOVERY OF
BAYLETON AND METABOLITE FORTIFICATIONS FROM POULTRY - EGG

			Peak Response															
			Sample							0.01 ppm Standard								
			Analyte			Internal Standard				Analyte			Internal Standard					
Sample	Compound Added	ppm Added (Bayleton Equivalents)	Base (mm)	Ht. (mm)	Area (mm^2)	Base (mm)	Ht. (mm)	Area (mm^2)	Ratio	Base (mm)	Ht. (mm)	Area (mm^2)	Base (mm)	Ht. (mm)	Area (mm^2)	Ratio	Net Residue (ppm)	% Recovery
Control Egg*	--	0.000	0.0	0.0	0.0	14.5	23.0	166.8	0.00	9.5	42.0	199.5	13.5	15.0	101.2	1.97	<0.0010	
Control Egg	Bayleton	0.010	11.0	73.0	401.5	13.5	31.5	212.6	1.89	9.5	52.0	247.0	13.5	17.5	118.1	2.09	0.0090	90
Control Egg	Bayleton	0.005	10.5	32.5	170.6	15.5	19.5	151.1	1.13	9.5	52.0	247.0	13.5	17.5	118.1	2.09	0.0054	108
Control Egg	KWG 0519	0.010	11.0	85.0	467.5	14.0	43.5	304.5	1.54	9.0	70.0	315.0	13.5	28.0	189.0	1.67	0.0092	92
Control Egg	KWG 0519	0.005	13.0	45.0	292.5	16.0	41.0	328.0	0.89	10.0	60.0	300.0	13.5	24.5	165.4	1.81	0.0049	98
Control Egg	KWG 1640	0.010	15.5	41.5	321.6	14.0	28.5	199.5	1.61	10.0	60.0	300.0	13.5	24.5	165.4	1.81	0.0089	89
Control Egg	KWG 1640	0.005	14.0	45.0	315.0	16.0	45.5	364.0	0.87	9.0	69.0	310.5	14.5	26.5	192.1	1.62	0.0054	108
Control Egg	KWG 1323	0.010	11.5	72.5	416.9	15.5	32.5	251.9	1.66	9.0	69.0	310.5	14.5	26.5	192.1	1.62	0.0102	102
Control Egg	KWG 1323	0.005	11.5	51.5	296.1	15.5	35.0	271.2	1.09	10.0	70.0	350.0	13.5	25.0	168.8	2.07	0.0053	106
Control Egg	KWG 1342	0.010	10.5	61.0	320.2	15.5	19.5	151.1	2.12	10.0	70.0	350.0	13.5	25.0	168.8	2.07	0.0102	102
Control Egg	KWG 1342	0.005	12.0	63.5	381.0	15.5	41.0	317.8	1.20	10.5	74.5	391.1	13.5	23.0	155.2	2.52	0.0048	96

*All samples 50 gm

CONFIDENTIAL
PROPERTY OF
MOBAY CHEMICAL CORPORATION
AGRICULTURAL CHEMICALS DIVISION

80265

APPENDIX II

CONFIRMATORY QUANTITATION (IONS 294 AND 328) OF BAYLETON IN POULTRY TISSUES AND EGG

CONFIDENTIAL
PROPERTY OF
MOBAY CHEMICAL CORPORATION
AGRICULTURAL CHEMICALS DIVISION

RECOVERY OF
BAYLETON FORTIFICATIONS FROM POULTRY - MUSCLE (CONFIRMATION)

			Peak Response															
			Sample							0.1 ppm Standard								
			Analyte			Internal Standard				Analyte			Internal Standard					
Sample	Compound Added	ppm Added (Bayleton Equivalents)	Base (mm)	Ht. (mm)	Area (mm^2)	Base (mm)	Ht. (mm)	Area (mm^2)	Ratio	Base (mm)	Ht. (mm)	Area (mm^2)	Base (mm)	Ht. (mm)	Area (mm^2)	Ratio	Net Residue (ppm)	% Recovery
Control Muscle*	--	0.00	6.0	2.0	6.0	13.0	80.5	523.2	0.01	7.5	91.0	341.2	12.0	88.0	528.0	0.65	<0.010	
Control Muscle	Bayleton	0.10	7.5	85.0	318.8	12.5	64.0	400.0	0.80	8.5	88.0	374.0	12.0	89.0	534.0	0.70	0.112	112
Control Muscle	Bayleton	0.05	8.0	57.0	228.0	12.5	81.0	506.2	0.45	8.5	88.0	374.0	12.0	89.0	534.0	0.70	0.062	124

*All samples 25 gm

CONFIDENTIAL
PROPERTY OF
MOBAY CHEMICAL CORPORATION
AGRICULTURAL CHEMICALS DIVISION

RECOVERY OF
BAYLETON FORTIFICATIONS FROM POULTRY - FAT (CONFIRMATION)

			Peak Response															
			Sample							0.1 ppm Standard								
			Analyte			Internal Standard				Analyte			Internal Standard					
Sample	Compound Added	ppm Added (Bayleton Equivalents)	Base (mm)	Ht. (mm)	Area (mm^2)	Base (mm)	Ht. (mm)	Area (mm^2)	Ratio	Base (mm)	Ht. (mm)	Area (mm^2)	Base (mm)	Ht. (mm)	Area (mm^2)	Ratio	Net Residue (ppm)	% Recovery
Control Fat*	--	0.00	7.0	4.0	14.0	12.5	77.0	481.2	0.03	7.5	91.0	341.2	11.5	55.5	319.1	1.07	<0.010	
Control Fat	Bayleton	0.10	8.0	87.0	348.0	12.5	45.5	284.4	1.22	8.0	92.0	368.0	12.0	58.5	351.0	1.05	0.113	113
Control Fat	Bayleton	0.05	8.5	68.5	291.1	13.0	85.5	555.8	0.52	8.0	92.0	368.0	12.0	58.5	351.0	1.05	0.047	94

*All samples 25 gm

CONFIDENTIAL
PROPERTY OF
MOBAY CHEMICAL CORPORATION
AGRICULTURAL CHEMICALS DIVISION

RECOVERY OF
BAYLETON FORTIFICATIONS FROM POULTRY - SKIN (CONFIRMATION)

			Peak Response															
			Sample							0.1 ppm Standard								
			Analyte			Internal Standard				Analyte			Internal Standard					
Sample	Compound Added	ppm Added (Bayleton Equivalents)	Base (mm)	Ht. (mm)	Area (mm^2)	Base (mm)	Ht. (mm)	Area (mm^2)	Ratio	Base (mm)	Ht. (mm)	Area (mm^2)	Base (mm)	Ht. (mm)	Area (mm^2)	Ratio	Net Residue (ppm)	% Recovery
Control Skin*	--	0.00	6.0	17.5	52.5	14.0	74.0	518.0	0.10	8.5	88.0	374.0	11.5	60.5	347.9	1.08	<0.010	
Control Skin	Bayleton	0.10	7.5	84.0	315.0	12.5	46.5	290.6	1.08	8.5	88.0	374.0	12.5	61.0	381.2	0.98	0.101	101
Control Skin	Bayleton	0.05	8.5	58.0	246.5	13.0	76.0	494.0	0.50	8.5	88.0	374.0	12.5	61.0	381.2	0.98	0.042	84

*All samples 25 gm

CONFIDENTIAL
PROPERTY OF
MOBAY CHEMICAL CORPORATION
AGRICULTURAL CHEMICALS DIVISION

RECOVERY OF
BAYLETON FORTIFICATIONS FROM POULTRY - LIVER (CONFIRMATION)

			Peak Response															
			Sample							0.1 ppm Standard								
			Analyte			Internal Standard				Analyte			Internal Standard					
Sample	Compound Added	ppm Added (Bayleton Equivalents)	Base (mm)	Ht. (mm)	Area (mm^2)	Base (mm)	Ht. (mm)	Area (mm^2)	Ratio	Base (mm)	Ht. (mm)	Area (mm^2)	Base (mm)	Ht. (mm)	Area (mm^2)	Ratio	Net Residue (ppm)	% Recovery
Control Liver*	--	0.00	7.5	4.5	16.9	12.0	90.0	540.0	0.03	7.5	82.0	307.5	12.0	55.0	330.0	0.93	<0.010	
Control Liver	Bayleton	0.10	7.5	91.0	341.2	12.5	43.0	268.8	1.27	8.5	79.0	335.8	11.5	52.5	301.9	1.11	0.111	111
Control Liver	Bayleton	0.05	7.0	89.0	311.5	13.0	79.0	513.5	0.61	8.5	79.0	335.8	11.0	63.0	346.5	0.97	0.060	120

*All samples 15 gm

CONFIDENTIAL
PROPERTY OF
MOBAY CHEMICAL CORPORATION
AGRICULTURAL CHEMICALS DIVISION

80255

RECOVERY OF
BAYLETON FORTIFICATIONS FROM POULTRY - GIZZARD (CONFIRMATION)

			Peak Response															
			Sample							0.1 ppm Standard								
			Analyte			Internal Standard				Analyte			Internal Standard					
Sample	Compound Added	ppm Added (Bayleton Equivalents)	Base (mm)	Ht. (mm)	Area (mm²)	Base (mm)	Ht. (mm)	Area (mm²)	Ratio	Base (mm)	Ht. (mm)	Area (mm²)	Base (mm)	Ht. (mm)	Area (mm²)	Ratio	Net Residue (ppm)	% Recovery
Control Gizzard*	--	0.00	6.0	2.0	6.0	16.0	88.5	708.0	0.01	11.0	82.5	453.8	16.5	75.5	622.9	0.73	<0.010	
Control Gizzard	Bayleton	0.10	11.0	86.0	473.0	16.5	71.0	585.8	0.81	10.5	75.5	396.4	16.0	61.0	488.0	0.81	0.099	99
Control Gizzard	Bayleton	0.05	17.0	27.0	229.5	16.0	63.5	508.0	0.45	10.5	75.5	396.4	16.0	61.0	488.0	0.81	0.055	110

*All samples 10 gm

CONFIDENTIAL
PROPERTY OF
MOBAY CHEMICAL CORPORATION
AGRICULTURAL CHEMICALS DIVISION

80265

RECOVERY OF
BAYLETON FORTIFICATIONS FROM POULTRY - EGG (CONFIRMATION)

			Peak Response															
			Sample							0.01 ppm Standard								
			Analyte			Internal Standard				Analyte			Internal Standard					
Sample	Compound Added	ppm Added (Bayleton Equivalents)	Base (mm)	Ht. (mm)	Area (mm^2)	Base (mm)	Ht. (mm)	Area (mm^2)	Ratio	Base (mm)	Ht. (mm)	Area (mm^2)	Base (mm)	Ht. (mm)	Area (mm^2)	Ratio	Net Residue (ppm)	% Recovery
Control Egg*	--	0.000	8.5	19.0	80.8	18.0	71.0	639.0	0.13	11.0	85.0	467.5	13.5	40.5	273.4	1.71	<0.0010	
Control Egg	Bayleton	0.010	11.0	88.0	484.0	14.0	43.5	304.5	1.59	10.5	94.0	493.5	13.5	43.0	290.2	1.70	0.0086	86
Control Egg	Bayleton	0.005	9.5	61.0	289.8	15.5	41.5	321.6	0.90	10.5	94.0	493.5	13.5	43.0	290.2	1.70	0.0045	90

*All samples 50 gm

CONFIDENTIAL
PROPERTY OF
MOBAY CHEMICAL CORPORATION
AGRICULTURAL CHEMICALS DIVISION

80265

80265

APPENDIX III

QUANTITATION OF OVERSPIKES OF HYDROLYZED AND DERIVATIZED BAYLETON ADDED INCREMENTALLY TO POULTRY TISSUE AND EGG CONTROLS PRIOR TO INJECTION

CONFIDENTIAL
PROPERTY OF
MOBAY CHEMICAL CORPORATION
AGRICULTURAL CHEMICALS DIVISION

RECOVERY OF
OVERSPIKES IN POULTRY MUSCLE ADDED AT GC*

			Peak Response															
			Sample							0.1 ppm Standard								
			Analyte			Internal Standard				Analyte			Internal Standard					
Sample	Compound Added	ppm Added (Bayleton Equivalents)	Base (mm)	Ht. (mm)	Area (mm^2)	Base (mm)	Ht. (mm)	Area (mm^2)	Ratio	Base (mm)	Ht. (mm)	Area (mm^2)	Base (mm)	Ht. (mm)	Area (mm^2)	Ratio	Net Residue (ppm)	% Recovery
Control Muscle	Bayleton*	0.01	7.5	15.5	58.1	14.5	77.0	558.2	0.10	9.0	79.0	355.5	12.0	63.0	378.0	0.94	0.011	110
Control Muscle	Bayleton*	0.02	8.0	26.0	104.0	13.5	72.5	489.4	0.21	8.0	81.0	324.0	11.0	66.0	363.0	0.89	0.024	120
Control Muscle	Bayleton*	0.03	8.0	42.0	168.0	14.0	73.0	511.0	0.33	9.0	81.0	364.5	12.0	65.0	390.0	0.93	0.035	117
Control Muscle	Bayleton*	0.04	7.5	56.5	211.9	13.5	66.0	445.5	0.48	9.0	81.0	364.5	12.0	65.0	390.0	0.93	0.052	130

*The muscle control was overspiked with increasing amounts of hydrolyzed and derivatized Bayleton after intial GC/MS quantitation.

CONFIDENTIAL
PROPERTY OF
MOBAY CHEMICAL CORPORATION
AGRICULTURAL CHEMICALS DIVISION

80265

RECOVERY OF
OVERSPIKES IN POULTRY FAT ADDED AT GC*

			Peak Response															
			Sample							0.1 ppm Standard								
			Analyte			Internal Standard				Analyte			Internal Standard					
Sample	Compound Added	ppm Added (Bayleton Equivalents)	Base (mm)	Ht. (mm)	Area (mm²)	Base (mm)	Ht. (mm)	Area (mm²)	Ratio	Base (mm)	Ht. (mm)	Area (mm²)	Base (mm)	Ht. (mm)	Area (mm²)	Ratio	Net Residue (ppm)**	% Recovery
Control Fat	Bayleton*	0.01	8.5	21.0	89.2	13.0	73.0	474.5	0.19	8.5	65.0	276.2	12.5	34.0	212.5	1.30	0.012	120
Control Fat	Bayleton*	0.02	8.0	36.0	144.0	13.5	68.0	459.0	0.31	8.0	78.0	312.0	12.0	39.0	234.0	1.33	0.020	100
Control Fat	Bayleton*	0.03	8.0	53.0	212.0	13.0	63.0	409.5	0.52	8.0	78.0	312.0	12.0	39.0	234.0	1.33	0.036	120
Control Fat	Bayleton*	0.04	7.5	61.0	228.8	13.0	57.0	370.5	0.62	8.5	80.0	340.0	12.5	41.0	256.2	1.33	0.044	110

*The fat control was overspiked with increasing amounts of hydrolyzed and derivatized Bayleton after initial GC/MS quantitation.

**Corrected for fat control recovery of 0.003 ppm

CONFIDENTIAL
PROPERTY OF
MOBAY CHEMICAL CORPORATION
AGRICULTURAL CHEMICALS DIVISION

80265

RECOVERY OF
OVERSPIKES IN POULTRY SKIN ADDED AT GC*

			Peak Response															
			Sample							0.1 ppm Standard								
			Analyte			Internal Standard				Analyte			Internal Standard					
Sample	Compound Added	ppm Added (Bayleton Equivalents)	Base (mm)	Ht. (mm)	Area (mm^2)	Base (mm)	Ht. (mm)	Area (mm^2)	Ratio	Base (mm)	Ht. (mm)	Area (mm^2)	Base (mm)	Ht. (mm)	Area (mm^2)	Ratio	Net Residue (ppm)**	% Recovery
Control Skin	Bayleton*	0.01	7.5	38.5	144.4	13.5	84.0	567.0	0.25	8.5	80.5	342.1	11.5	51.5	296.1	1.16	0.014	140
Control Skin	Bayleton*	0.02	7.5	59.0	221.2	13.0	85.5	555.8	0.40	8.5	85.0	361.2	11.0	59.0	324.5	1.11	0.028	140
Control Skin	Bayleton*	0.03	7.5	67.5	253.1	13.5	73.0	492.8	0.51	8.5	85.0	361.2	11.0	59.0	324.5	1.11	0.038	127
Control Skin	Bayleton*	0.04	7.5	57.0	213.8	13.0	33.5	217.8	0.98	8.5	61.0	259.2	11.5	28.0	161.0	1.61	0.053	132

*The Skin control was overspiked with increasing amounts of hydrolyzed and derivatized Bayleton after intial GC/MS quantitation.

**Corrected for skin control recovery of 0.008 ppm.

CONFIDENTIAL
PROPERTY OF
MOBAY CHEMICAL CORPORATION
AGRICULTURAL CHEMICALS DIVISION

80265

RECOVERY OF
OVERSPIKES IN POULTRY LIVER ADDED AT GC*

			Peak Response															
			Sample							0.1 ppm Standard								
			Analyte			Internal Standard				Analyte			Internal Standard					
Sample	Compound Added	ppm Added (Bayleton Equivalents)	Base (mm)	Ht. (mm)	Area (mm^2)	Base (mm)	Ht. (mm)	Area (mm^2)	Ratio	Base (mm)	Ht. (mm)	Area (mm^2)	Base (mm)	Ht. (mm)	Area (mm^2)	Ratio	Net Residue (ppm)**	% Recovery
Control Liver	Bayleton*	0.01	7.0	31.0	108.5	13.0	83.0	539.5	0.20	7.5	82.0	307.5	12.0	35.5	213.0	1.44	0.009	90
Control Liver	Bayleton*	0.02	7.5	49.0	183.8	13.5	73.0	492.8	0.37	7.5	85.0	318.8	12.0	34.5	207.0	1.54	0.019	95
Control Liver	Bayleton*	0.03	7.0	62.0	217.0	13.5	56.0	378.0	0.57	7.5	85.0	318.8	12.0	34.5	207.0	1.54	0.032	107
Control Liver	Bayleton*	0.04	7.5	69.0	258.8	12.5	44.5	278.1	0.93	7.5	89.0	333.8	10.5	34.0	178.5	1.87	0.045	112

*The liver control was overspiked with increasing amounts of hydrolyzed and derivatized Bayleton after initial GC/MS quantitation.

**Corrected for liver control recovery of 0.005 ppm

CONFIDENTIAL
PROPERTY OF
MOBAY CHEMICAL CORPORATION
AGRICULTURAL CHEMICALS DIVISION

RECOVERY OF
OVERSPIKES IN POULTRY GIZZARD ADDED AT GC*

			Peak Response															
			Sample							0.1 ppm Standard								
			Analyte			Internal Standard				Analyte			Internal Standard					
Sample	Compound Added	ppm Added (Bayleton Equivalents)	Base (mm)	Ht. (mm)	Area (mm^2)	Base (mm)	Ht. (mm)	Area (mm^2)	Ratio	Base (mm)	Ht. (mm)	Area (mm^2)	Base (mm)	Ht. (mm)	Area (mm^2)	Ratio	Net Residue (ppm)**	% Recovery
Control Gizzard	Bayleton*	0.01	9.5	19.0	90.2	17.0	75.5	641.8	0.14	11.5	63.5	365.1	15.5	48.5	375.9	0.97	0.013	130
Control Gizzard	Bayleton*	0.02	9.0	46.5	209.2	15.5	79.0	612.2	0.34	10.5	65.0	341.2	14.0	32.5	227.5	1.50	0.022	110
Control Gizzard	Bayleton*	0.03	9.5	49.5	235.1	15.5	49.5	383.6	0.61	10.5	70.0	367.5	13.5	34.5	232.9	1.58	0.038	127
Control Gizzard	Bayleton*	0.04	9.0	60.0	270.0	15.5	41.5	321.6	0.84	10.5	70.0	367.5	13.5	34.5	232.9	1.58	0.052	130

*The gizzard control was overspiked with increasing amounts of hydrolyzed and derivatized Bayleton after initial GC/MS quantitation.

**Corrected for gizzard control recovery of 0.001 ppm.

CONFIDENTIAL
PROPERTY OF
MOBAY CHEMICAL CORPORATION
AGRICULTURAL CHEMICALS DIVISION

80265

RECOVERY OF
OVERSPIKES IN POULTRY EGG ADDED AT GC*

			Peak Response															
			Sample							0.01 ppm Standard								
			Analyte			Internal Standard				Analyte			Internal Standard					
Sample	Compound Added	ppm Added (Bayleton Equivalents)	Base (mm)	Ht. (mm)	Area (mm^2)	Base (mm)	Ht. (mm)	Area (mm^2)	Ratio	Base (mm)	Ht. (mm)	Area (mm^2)	Base (mm)	Ht. (mm)	Area (mm^2)	Ratio	Net Residue (ppm)	% Recovery
Control Egg	Bayleton*	0.001	7.5	10.0	37.5	16.5	30.0	247.5	0.15	10.5	79.0	414.8	13.5	42.0	283.5	1.46	0.0010	100
Control Egg	Bayleton*	0.002	8.5	18.0	76.5	15.5	27.0	209.2	0.36	10.5	87.0	456.8	13.5	46.5	313.9	1.46	0.0025	125
Control Egg	Bayleton*	0.003	8.5	38.0	161.5	17.5	33.5	293.1	0.55	10.5	87.0	456.8	13.5	46.5	313.9	1.46	0.0038	127
Control Egg	Bayleton*	0.004	9.5	40.0	190.0	17.5	27.5	240.6	0.79	10.5	92.0	483.0	12.5	52.0	325.0	1.49	0.0053	132

*The egg control was overspiked with increasing amounts of hydrolyzed and derivatized Bayleton after initial GC/MS quantitation.

CONFIDENTIAL
PROPERTY OF
MOBAY CHEMICAL CORPORATION
AGRICULTURAL CHEMICALS DIVISION

80265

(Typical Std used for Muscle Samples)

Sample & No. _____ NER 1-196-13

Oppm Std - hydrolyzed + deoxidized

Bayleton

Dates 6-26-81 7-9-81

Area mm² Ratio

Analyte I.S. Ratio

Sample

Oppm Std 7.5 = 59.5 ÷ 2 (223.1) 11.5 = 45.5 ÷ 2 (261.6) 0.85

CONFIDENTIAL

PROPERTY OF

MOBAY CHEMICAL CORPORATION
AGRICULTURAL CHEMICALS DIVISION

*** SAMPLE IDENTITY # 13.00 dated 7/ 9/1981 Thursday

ION MASSES	127.00	161.00
DWELL TIMES (msec)	400.00	400.00
MAXIMUM ABUNDANCE	74.79	46.25

RUN 1 TOTAL RUN TIME = 6.9 AMOUNT INJECTED = 6.00

ION =127.00
Full Scale= 75

ION =161.00
Full Scale= 75

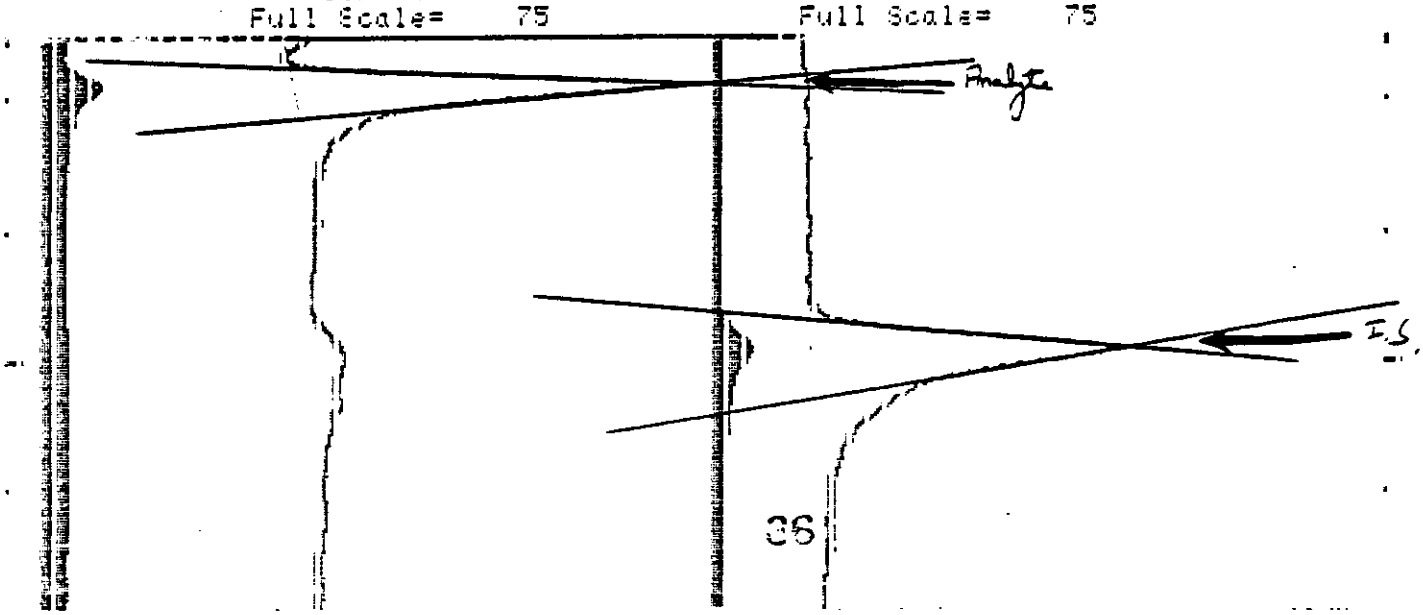

80265

Sample & No. _____ NBR 1-196-13

25gm Chicken Muscle Cntl

Dates: ... on 6-26-81 ... n 7-9-81

... Area mm² Ratio ... /Std.

	Analyte	I.S	Ratio
Sample	00×0.0 ÷ 2 (0.0)	12.0×26.0 ÷ 2 (456.0)	0.00
Alpha Std	25×59.5 ÷ 2 (223.1)	11.5×45.5 ÷ 2 (261.6)	0.85

CONFIDENTIAL
PROPERTY OF
MOBAY CHEMICAL CORPORATION
AGRICULTURAL CHEMICALS DIVISION

*** SAMPLE IDENTITY # 1.00 dated 7/ 9/1981 Thursday

ION MASSES	127.00	161.00
DWELL TIMES (msec)	400.00	400.00
MAXIMUM ABUNDANCE	37.96	58.16

RUN 2 TOTAL RUN TIME = 6.9 AMOUNT INJECTED = 6.00

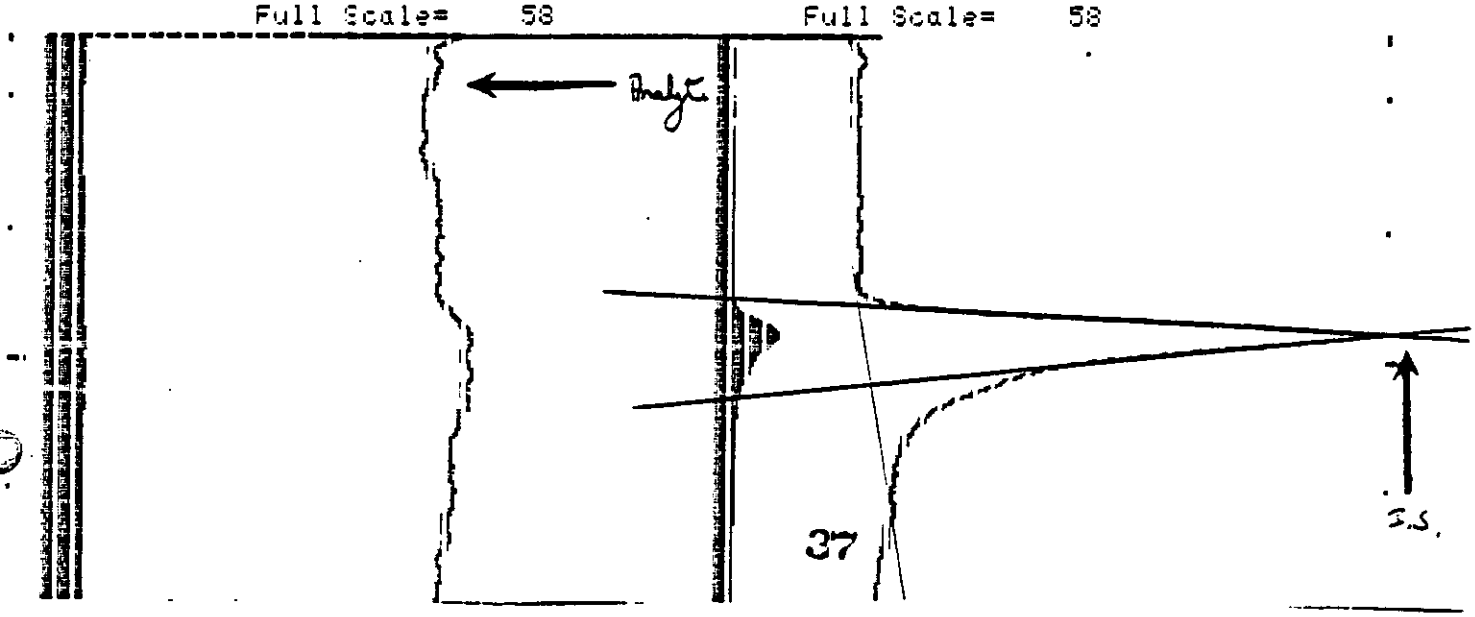

80265

Sample & No. _____ NBR 1-196-13

25gm Chicken Muscle Control Extr. Seal

with 0.1ppm Bayleton

Dates: [illegible] 6-26-81 [illegible] 2-9-81

Response: Area mm² Ratio : [illegible]/Std.

	Analyte	I.S.	Ratio
Sample	7.0 × 67.0 ÷ 2 (234.5)	12.0 × 41.5 ÷ 2 (249.0)	0.94
0.1ppm Std	7.5 × 69.0 ÷ 2 (258.8)	10.5 × 48.0 ÷ 2 (252.0)	1.03

CONFIDENTIAL
PROPERTY OF
MOBAY CHEMICAL CORPORATION
AGRICULTURAL CHEMICALS DIVISION

SAMPLE IDENTITY # 2.00 dated 7/ 9/1981 Thursday

ION MASSES	127.00	161.00
DWELL TIMES (msec)	400.00	400.00
MAXIMUM ABUNDANCE	108.44	56.22

RUN 3 TOTAL RUN TIME = 6.9 AMOUNT INJECTED = 6.00

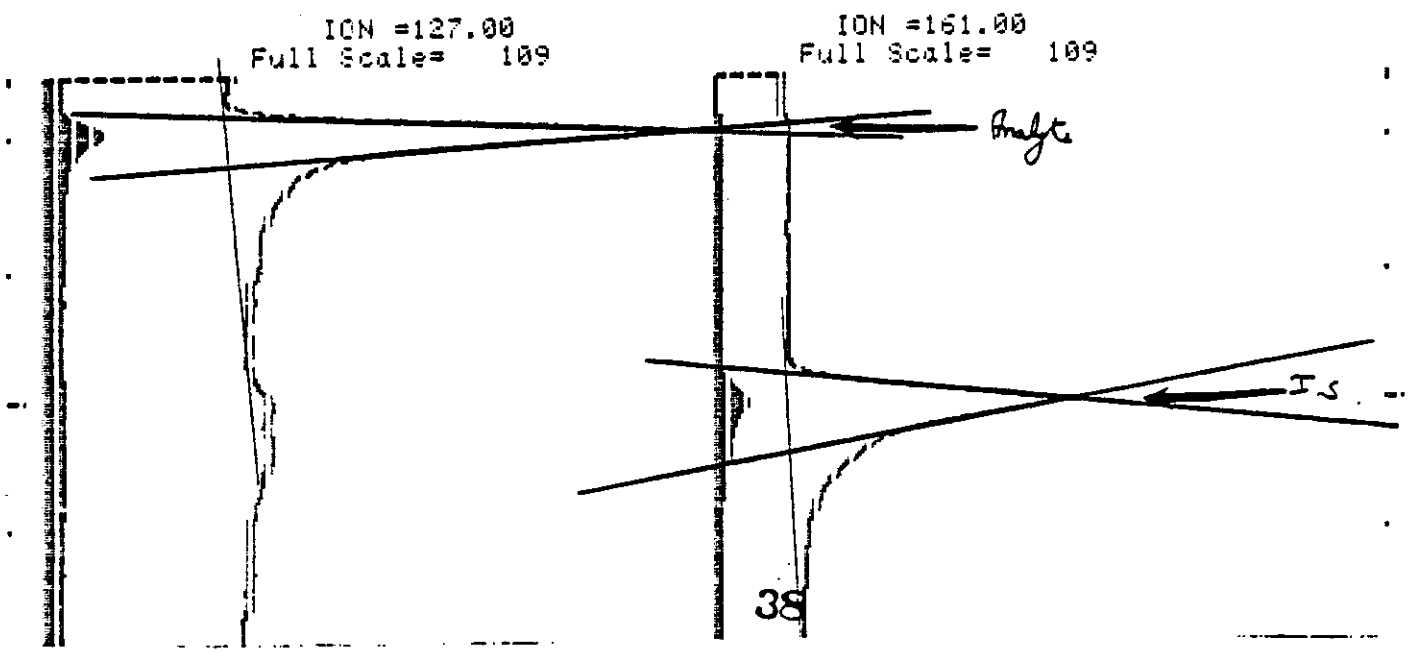

80265

Sample & No. _____ NBR 1-196-13

25 gm Chicken Muscle Control Sectioned with 0.05 ppm Bayleton

Dates: [illegible] 6-26-81 [illegible] 7-9-81

[illegible] Area mm² Ratio [illegible] /Std.

	Analyte	I.S.	Ratio
Sample	7.0 × 57.0 ÷ 2 (189.0)	12.0 × 61.0 ÷ 2 (366.0)	0.52
0.1 ppm Std	7.5 × 69.0 ÷ 2 (258.8)	10.5 × 48.0 ÷ 2 (252.0)	1.03

CONFIDENTIAL

PROPERTY OF

MOBAY CHEMICAL CORPORATION
AGRICULTURAL CHEMICALS DIVISION

*** SAMPLE IDENTITY # 3.00 dated 7/ 9/1981 Thursday

ION MASSES	127.00	161.00
DWELL TIMES (msec)	400.00	400.00
MAXIMUM ABUNDANCE	88.91	69.67

RUN 5 TOTAL RUN TIME = 6.9 AMOUNT INJECTED = 6.00

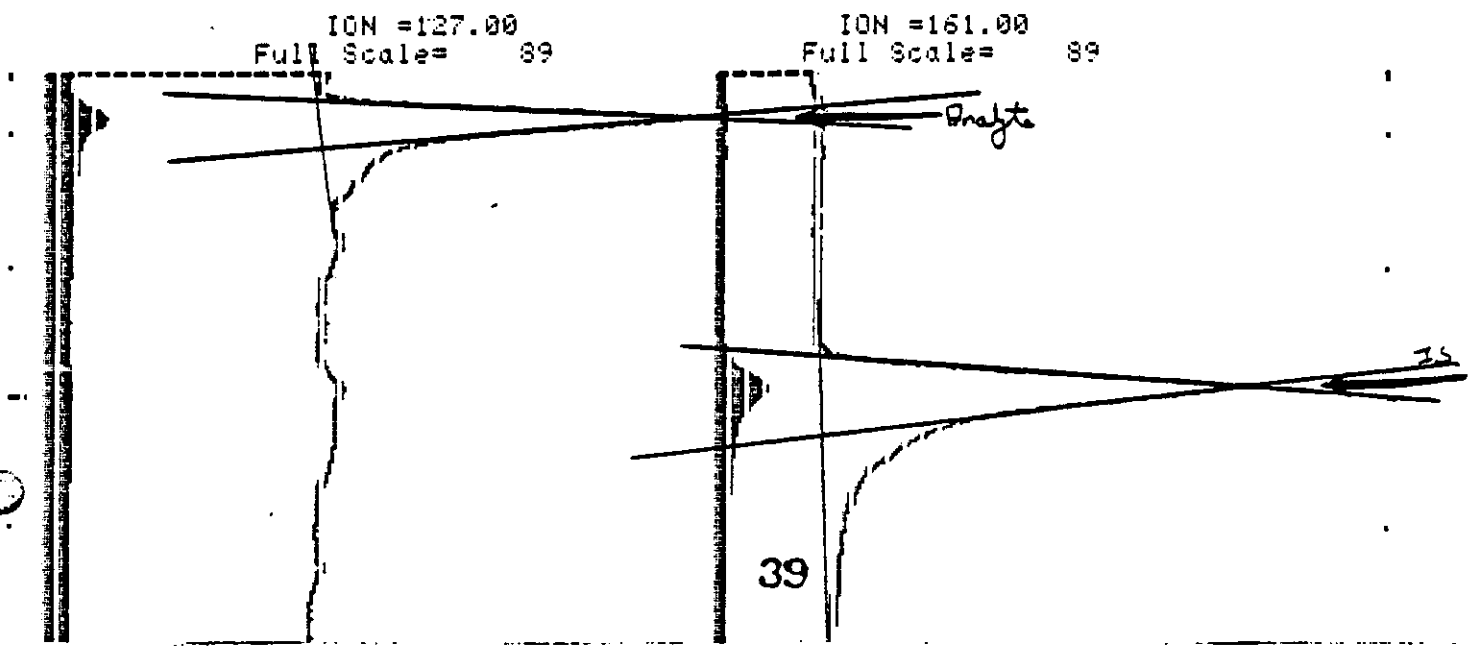

80265

Sample & No. _____ NBR 1-196-13

25gm Chicken Muscle Control Fortified

with 0.1ppm Kuwa 0519

Dates: 6-26-81 ion 7-9-81

Area mm² Ratio p.e/Std.

	Analyte	I.S.	Ratio
Sample	7.5*60.0÷2 (2250)	12.0*36.5÷2 (2190)	1.03
0.1ppm Std	7.5*66.0÷2 (2475)	10.0*51.0÷2 (2550)	0.97

CONFIDENTIAL

PROPERTY OF

MOBAY CHEMICAL CORPORATION
AGRICULTURAL CHEMICALS DIVISION

*** SAMPLE IDENTITY # 4.00 dated 7/ 9/1981 Thursday

ION MASSES	127.00	161.00
DWELL TIMES (msec)	400.00	400.00
MAXIMUM ABUNDANCE	75.08	40.20

RUN 6 TOTAL RUN TIME = 6.9 AMOUNT INJECTED = 6.00

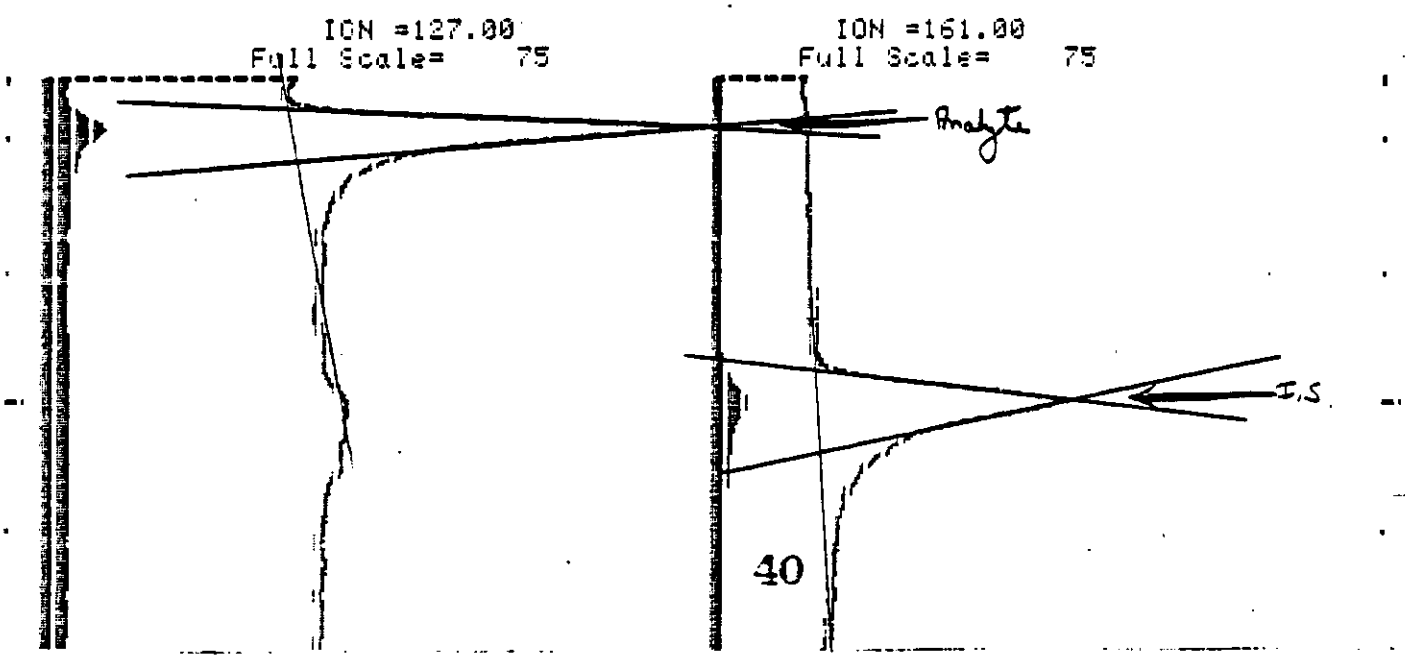

80265

Sample & No. _____ NBR 1796-13

25 gm Chicken Muscle Control Fortified with 0.05 ppm Kwa 0519

Dates: [illegible] 6-26-81 [illegible] 7-9-81

Response Area mm² Ratio [illegible] /Std.

	Analyte	I.S	Ratio
Sample	7.0×53.0÷2 (185.5)	11.5×70.0÷2 (402.5)	0.46
0.05 ppm Std	7.5×66.0÷2 (247.5)	10.0×51.0÷2 (255.0)	0.97

CONFIDENTIAL
PROPERTY OF
MOBAY CHEMICAL CORPORATION
AGRICULTURAL CHEMICALS DIVISION

*** SAMPLE IDENTITY # 5.00 dated 7/ 9/1981 Thursday

ION MASSES	127.00	161.00
DWELL TIMES (msec)	400.00	400.00
MAXIMUM ABUNDANCE	87.24	78.25

RUN 8 TOTAL RUN TIME = 6.9 AMOUNT INJECTED = 6.00

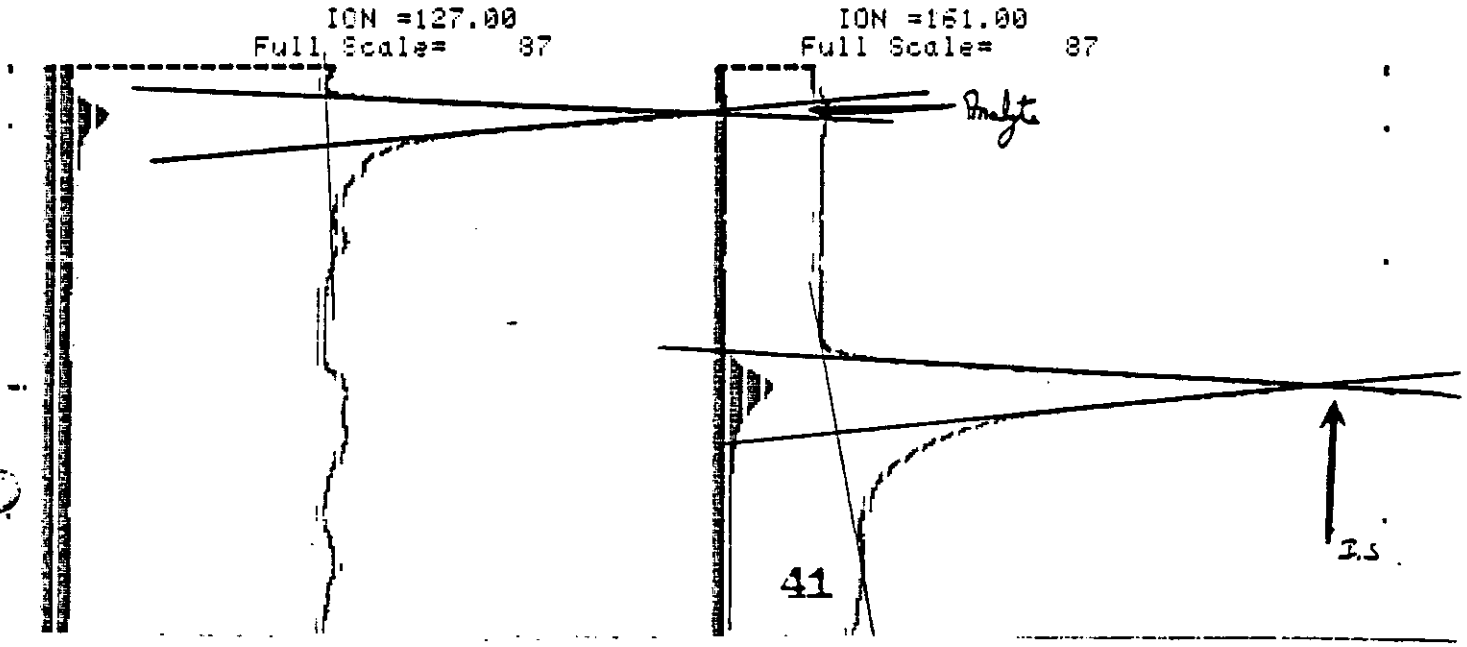

80265

Sample & No. _____ NBR 1-196-13

25gm Chicken Muscle Control Fortified

with 0.1ppm KWG 1640

Dates: Ur 6-26-81 Ion 7-10-81

Response: Area mm² Ratio ... /Std.

	Analyte	I.S.	Ratio
Sample	8.5×44.0/2 (187.0)	13.0×48.0/2 (312.0)	0.60
0.1ppm Std	7.5×75.0/2 (281.2)	12.5×75.0/2 (468.8)	0.60

CONFIDENTIAL
PROPERTY OF
MOBAY CHEMICAL CORPORATION
AGRICULTURAL CHEMICALS DIVISION

*** SAMPLE IDENTITY # 8.00 dated 7/10/1981 Friday

ION MASSES	127.00	161.00
DWELL TIMES (msec)	400.00	400.00
MAXIMUM ABUNDANCE	19.38	13.59

RUN14 TOTAL RUN TIME = 6.9 AMOUNT INJECTED = 6.00

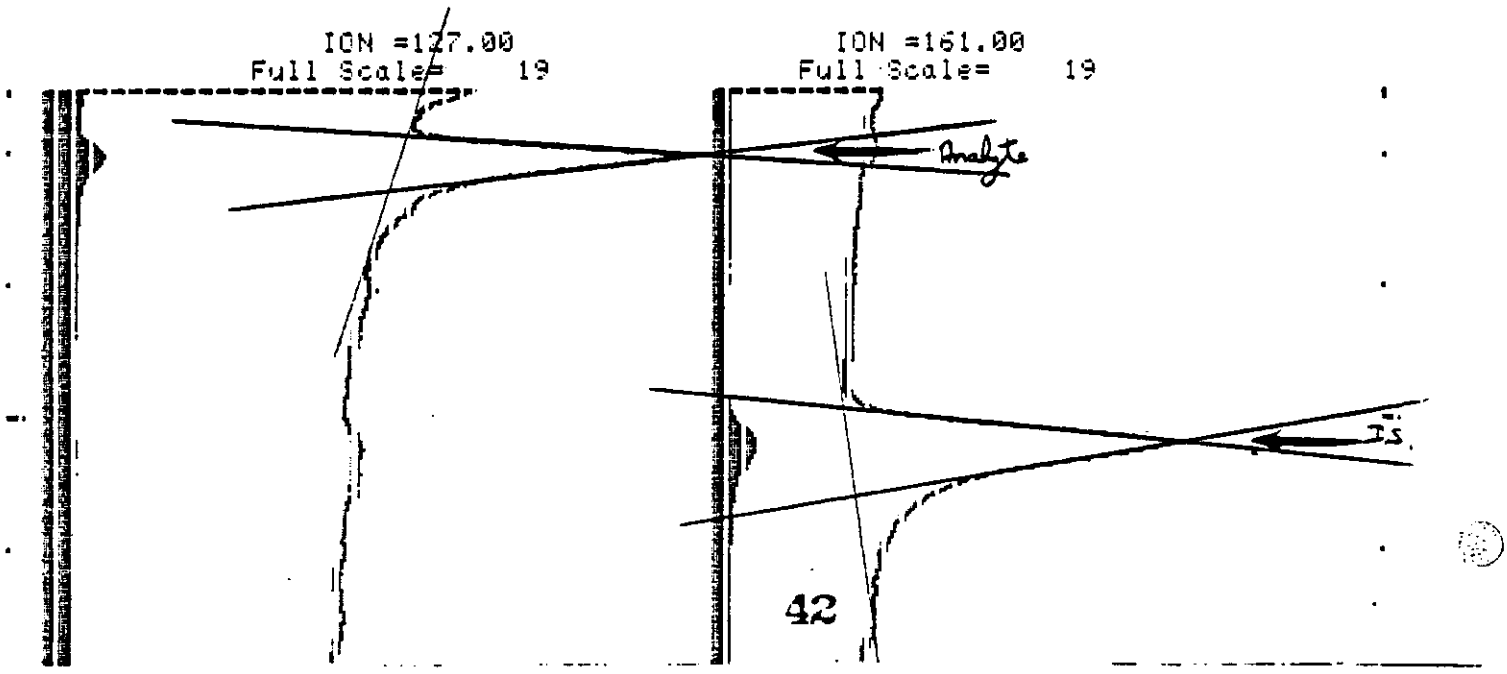

80265

Sample & No. _____ NBR 1-196-13

25 gm Chicken Muscle Control Fortified with 0.05 ppm KLO 1640

Dates: [illegible] 6-26-80 [illegible] 7-10-81

Response Area mm² Ratio [illegible] ple/Std.

	Analyte	I.S	Ratio
Sample	8.5 × 28.0 ÷ 2 (119.0)	12.5 × 80.0 ÷ 2 (500.0)	0.24
0.1 ppm Std	7.5 × 75.0 ÷ 2 (281.2)	12.5 × 75.0 ÷ 2 (468.8)	0.60

CONFIDENTIAL
PROPERTY OF
MOBAY CHEMICAL CORPORATION
AGRICULTURAL CHEMICALS DIVISION

*** SAMPLE IDENTITY # 9.00 dated 7/10/1981 Friday

ION MASSES	127.00	161.00
DWELL TIMES (msec)	400.00	400.00
MAXIMUM ABUNDANCE	25.84	42.62

RUN16 TOTAL RUN TIME = 6.9 AMOUNT INJECTED = 6.00

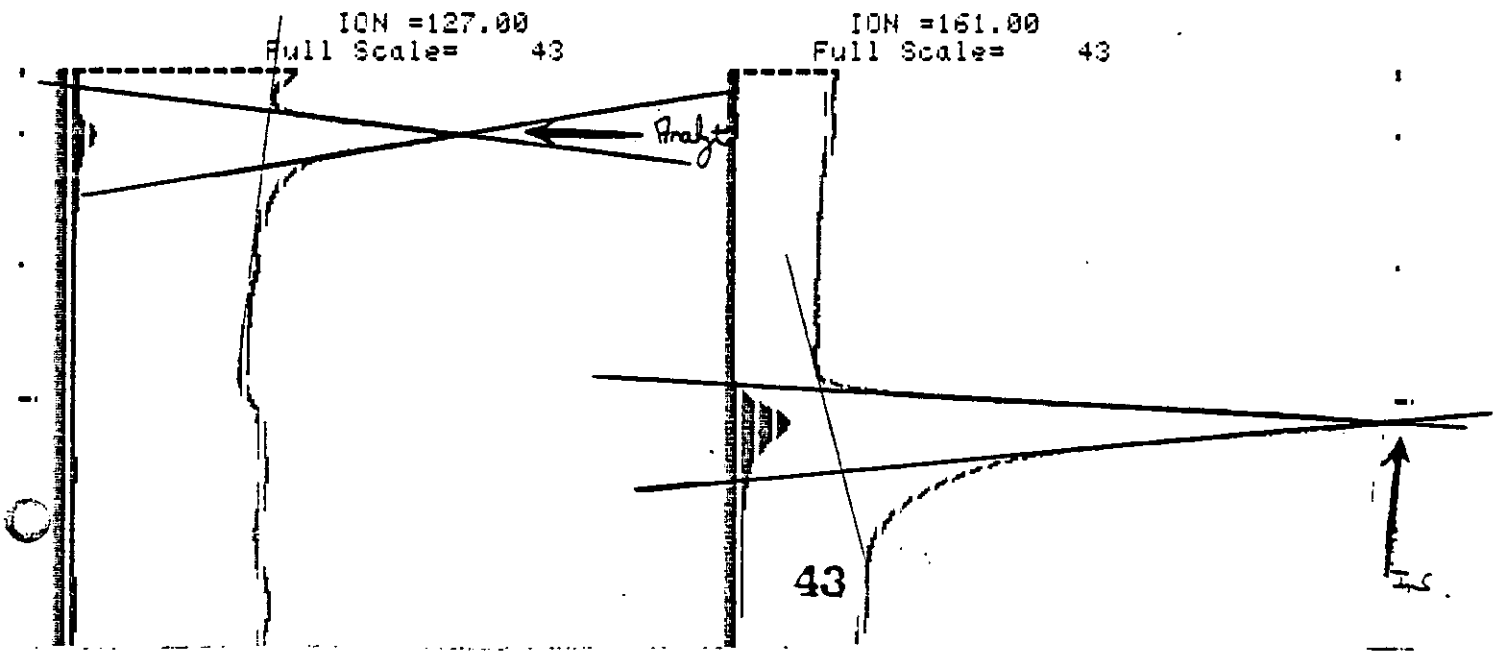

80265

Sample & No. _____ NBR 1796-13

25gm Chicken Muscle Control - Fortified

with Oilpoon Kuxo 1323

Dates: [illegible] 6-26-81 [illegible] 7-10-81

Imp: [illegible] Area mm² Ratio [illegible]/std.

	Analyte	I.S.	Ratio
Sample	7.5×77.0 ÷ 2 (288.8)	13.5×48.5 ÷ 2 (323.4)	0.88
Oilpoon Std.	8.0×80.5 ÷ 2 (322.0)	12.0×70.0 ÷ 2 (420.0)	0.77

CONFIDENTIAL
PROPERTY OF
MOBAY CHEMICAL CORPORATION
AGRICULTURAL CHEMICALS DIVISION

*** SAMPLE IDENTITY # 10.00 dated 7/10/1981 Friday

ION MASSES	127.00	161.00
DWELL TIMES (msec)	400.00	400.00
MAXIMUM ABUNDANCE	104.82	57.43

RUN17 TOTAL RUN TIME = 6.9 AMOUNT INJECTED = 6.00

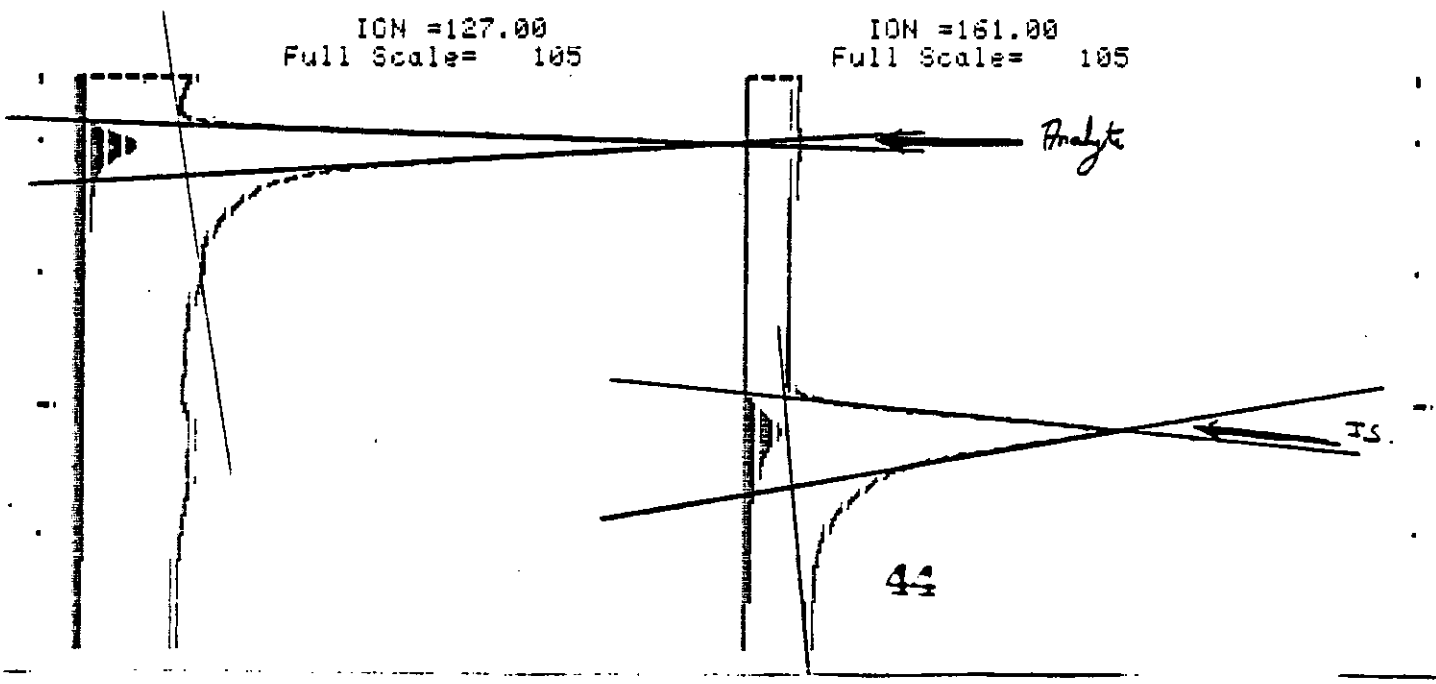

80265

Sample & No. ___ NPR 1796-13

25gm Chicken Muscle Control - Fortified with 0.05ppm Kwic 1323

Dates: 6-26-81 7-10-81

Area mm² Ratio

	Analyte	I.S.	Ratio
Sample	7.0×58.0±2 (203.0)	13.0×84.0±2 (546.0)	0.37
0.1ppm Std	8.0×80.5±2 (322.0)	12.0×70.0±2 (420.0)	0.77

CONFIDENTIAL
PROPERTY OF
MOBAY CHEMICAL CORPORATION
AGRICULTURAL CHEMICALS DIVISION

*** SAMPLE IDENTITY # 11.00 dated 7/10/1981 Friday

ION MASSES	127.00	161.00
DWELL TIMES (msec)	400.00	400.00
MAXIMUM ABUNDANCE	73.78	82.02

RUN19 TOTAL RUN TIME = 6.9 AMOUNT INJECTED = 6.00

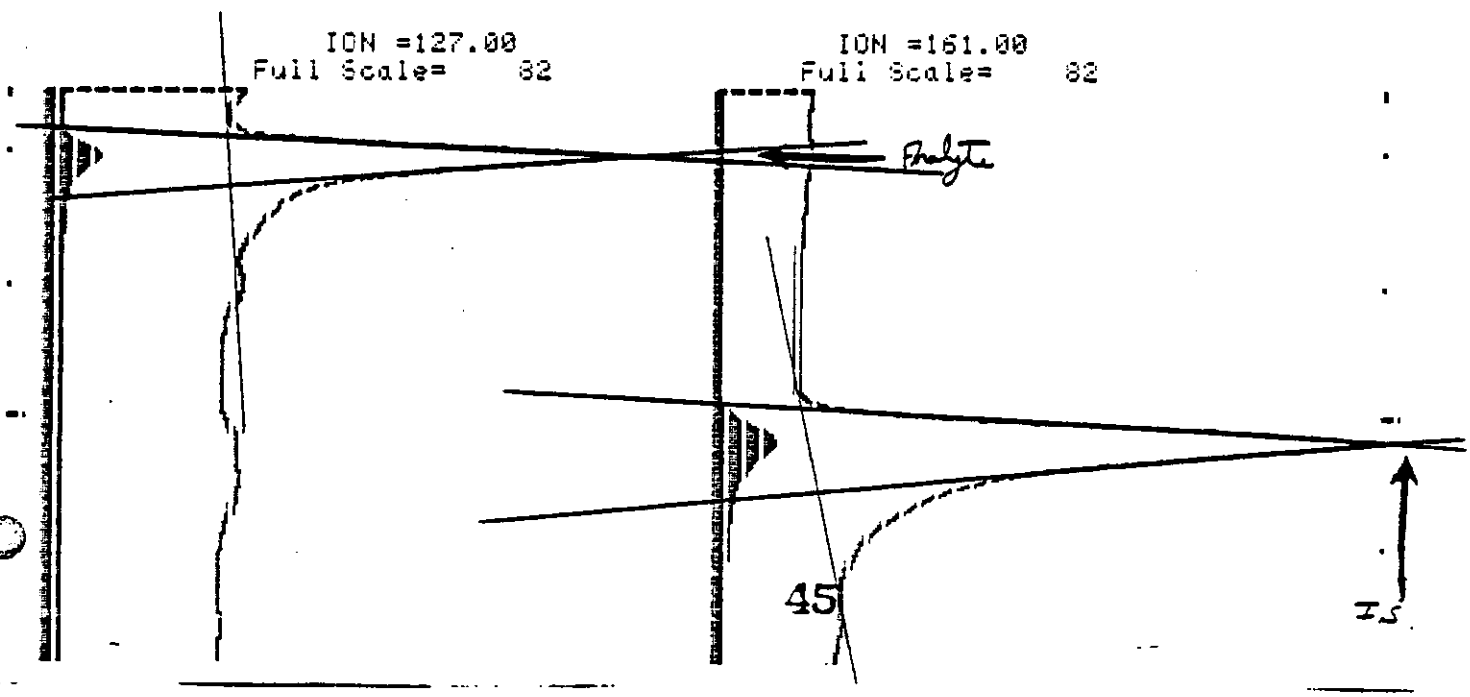

80265

Sample & No. _____ NBR 1-196-13

25gm Chicken Muscle Control Fortified

with 0.1ppm SWG 1342

Dates: [illegible] 6-26-81 [illegible] 7-10-81

[illegible] Area mm² Ratio [illegible] e/Std.

	Analyte	I.S.	Ratio
Sample	7.5×56.0±2 (210.0)	13.0×40.0±2 (260.0)	0.81
0.1ppm Std	7.5×71.0±2 (266.2)	12.0×60.0±2 (360.0)	0.74

CONFIDENTIAL
PROPERTY OF
MOBAY CHEMICAL CORPORATION
AGRICULTURAL CHEMICALS DIVISION

*** SAMPLE IDENTITY # 6.00 dated 7/10/1981 Friday

ION MASSES	127.00	161.00
DWELL TIMES (msec)	400.00	400.00
MAXIMUM ABUNDANCE	15.34	8.28

RUN11 TOTAL RUN TIME = 6.9 AMOUNT INJECTED = 6.00

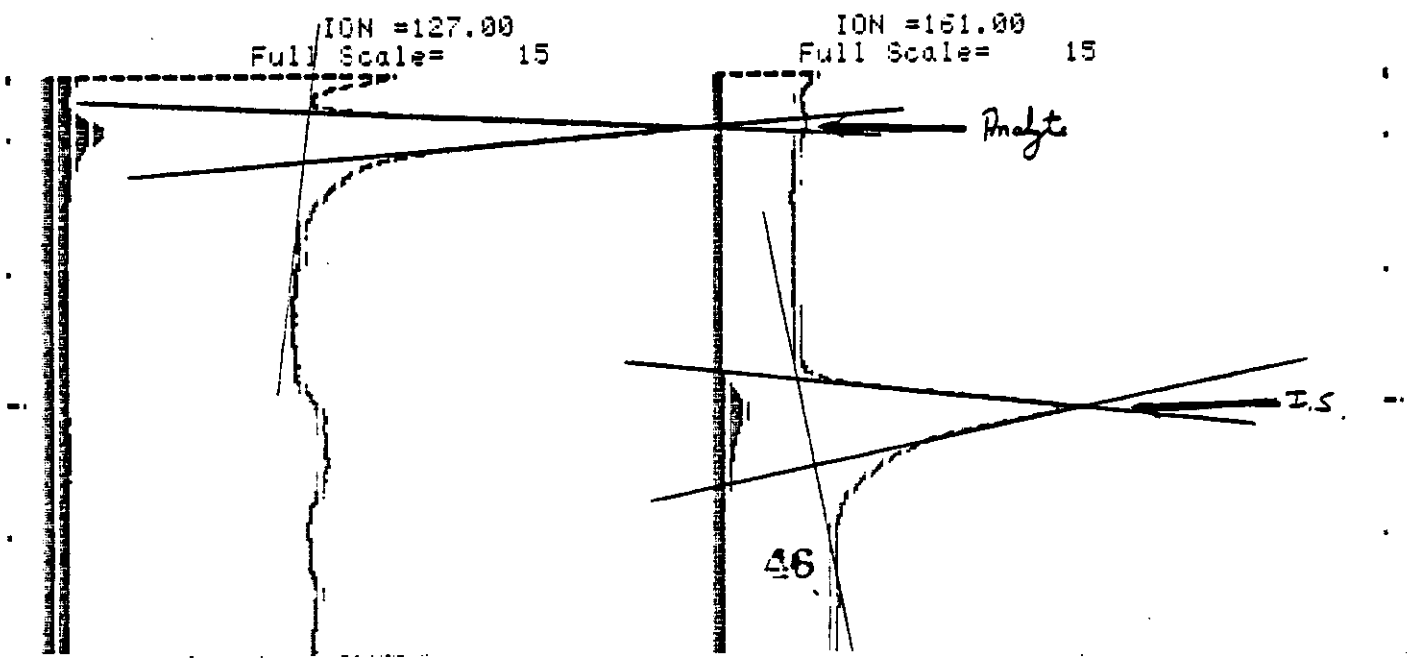

80265

Sample & No. _____ NBR 1196-13

25gm Chicken Muscle Control Fortified with 0.05ppm KWG 1342

Dates: on 6-26-81 in 7-10-81

Response Area and Ratio Std.

	Analyte	÷	I.S.	Ratio
Sample	7.5×49.8÷2 (183.8)		12.5×80.0÷2 (500.0)	0.37
0.05ppm Std	7.5×71.0÷2 (266.2)		12.0×60.0÷2 (360.0)	0.74

CONFIDENTIAL

PROPERTY OF

MOBAY CHEMICAL CORPORATION
AGRICULTURAL CHEMICALS DIVISION

*** SAMPLE IDENTITY # 7.00 dated 7/10/1981 Friday

ION MASSES	127.00	161.00
DWELL TIMES (msec)	400.00	400.00
MAXIMUM ABUNDANCE	23.75	27.81

RUN13 TOTAL RUN TIME = 6.9 AMOUNT INJECTED = 6.00

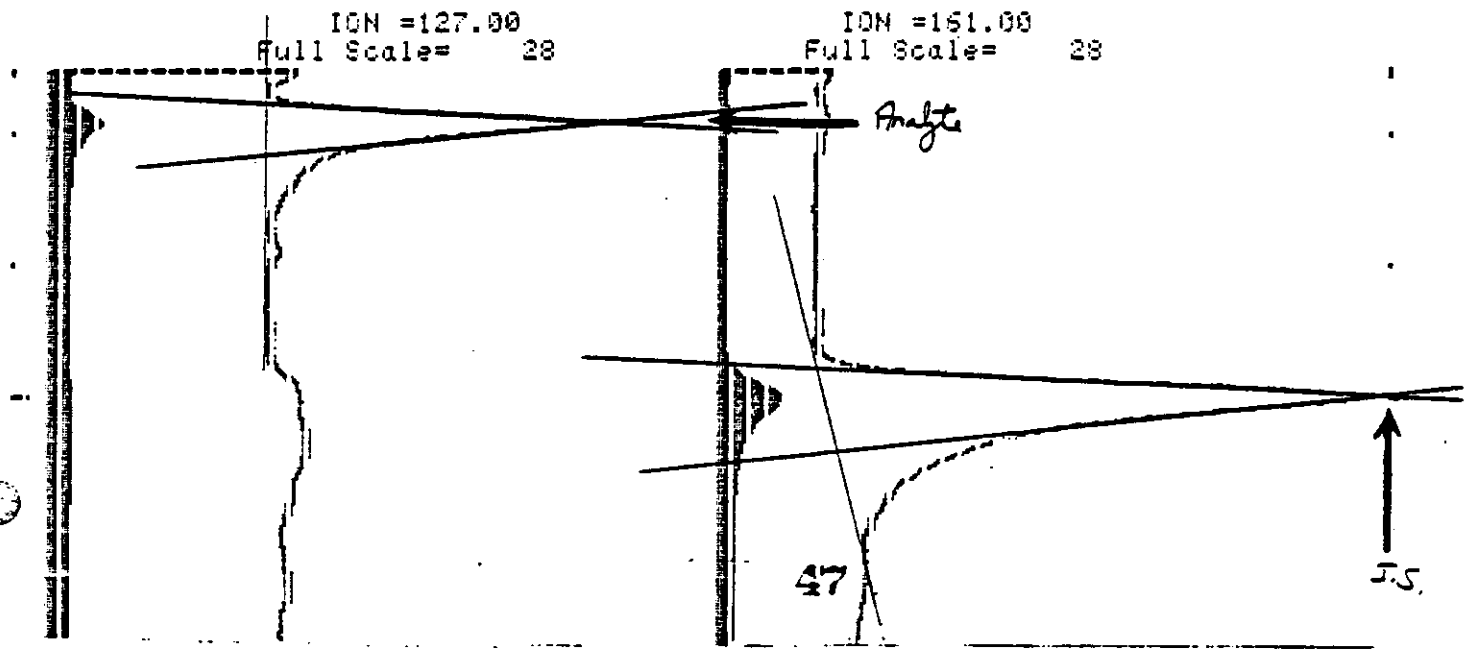

80265

(Typical Std used for Fat Samples)

Sample & No. _____ NBR 1-196-22

Oilppm Std - hydrolyzed + dewatered

Baylina

Dates: [illegible] on 7-8-81 [illegible] on 7-20-81

Respons= Area mm² Ratio [illegible] /Std.

	Analyte	I.S.	Ratio
Sample			
Oilppm Std	7.5×70.0:2 (262.5)	12.0×31.0:2 (186.0)	1.41

CONFIDENTIAL

PROPERTY OF

MOBAY CHEMICAL CORPORATION
AGRICULTURAL CHEMICALS DIVISION

*** SAMPLE IDENTITY # 12.00 dated 7/20/1981 Monday

ION MASSES	127.00	161.00
DWELL TIMES (msec)	400.00	400.00
MAXIMUM ABUNDANCE	46.76	20.07

RUN 1 TOTAL RUN TIME = 6.9 AMOUNT INJECTED = 6.00

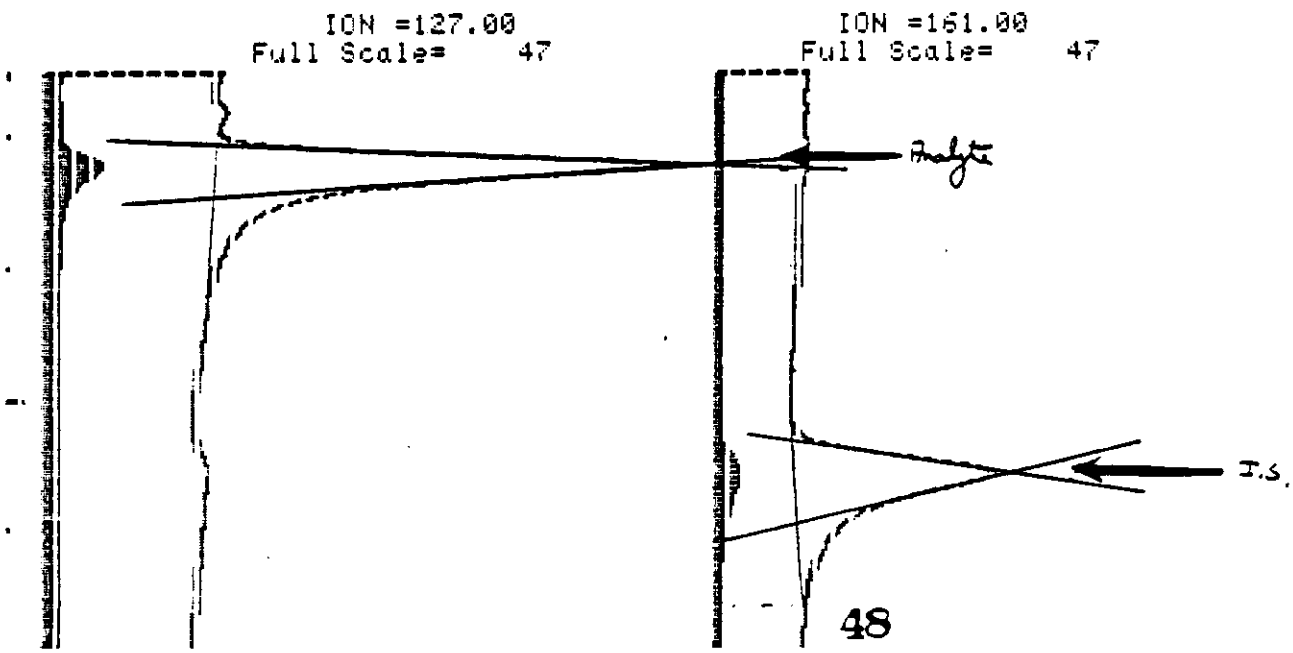

80265

Sample & No. _____ NBR 1-196-22

25gm Chicken Fat Control

Dates: [illegible] 7-8-81 [illegible] 7-20-81

Response Area/Ratio [illegible] /Std.

	Analyte	I.S.	Ratio
Sample	7.5 × 50 ÷ 2 (14.8)	12.5 × 68.0 ÷ 2 (425.0)	0.04
0.1ppm Std	7.5 × 70.0 ÷ 2 (262.5)	12.0 × 31.0 ÷ 2 (186.0)	1.41

CONFIDENTIAL

PROPERTY OF

MOBAY CHEMICAL CORPORATION
AGRICULTURAL CHEMICALS DIVISION

*** SAMPLE IDENTITY # 1.00 dated 7/20/1981 Monday

ION MASSES	127.00	161.00
DWELL TIMES (msec)	400.00	400.00
MAXIMUM ABUNDANCE	13.68	18.98

RUN 2 TOTAL RUN TIME = 6.9 AMOUNT INJECTED = 6.00

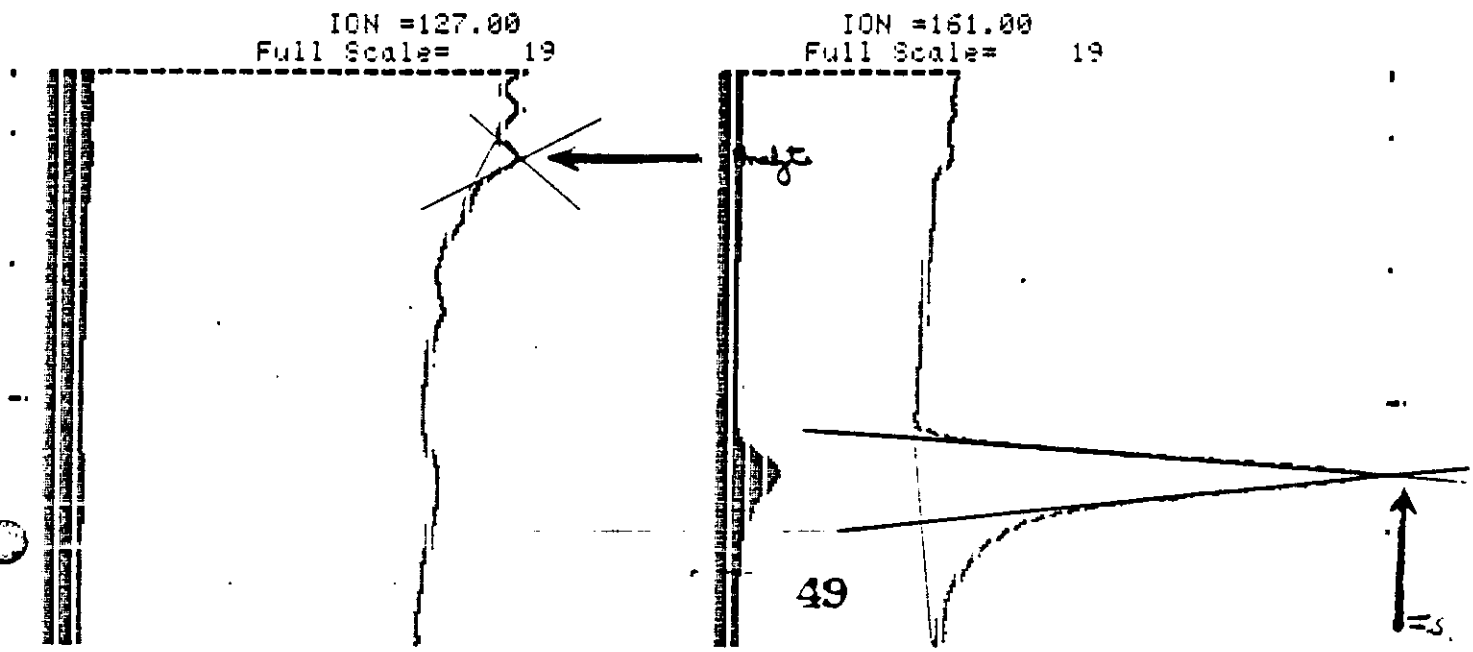

80265

Sample & No. _____ NBR 1-196-22

25gm Chicken Fat Control Fortified with

Oilppm Baylebon

Dates: [illegible] on 7-8-81 [illegible] 7-20-81

Response Area mm² Ratio [illegible] Std.

	Analyte	I.S.	Ratio
Sample	8.0 × 75.0 ÷ 2 (300.0)	12.0 × 34.0 ÷ 2 (204.0)	1.47
Oilppm Std	7.5 × 76.0 ÷ 2 (285.0)	12.0 × 34.5 ÷ 2 (207.0)	1.38

CONFIDENTIAL

PROPERTY OF

MOBAY CHEMICAL CORPORATION
AGRICULTURAL CHEMICALS DIVISION

*** SAMPLE IDENTITY # 2.00 dated 7/20/1981 Monday

ION MASSES	127.00	161.00
DWELL TIMES (msec)	400.00	400.00
MAXIMUM ABUNDANCE	60.48	25.97

RUN 3 TOTAL RUN TIME = 6.9 AMOUNT INJECTED = 6.00

ION =127.00
Full Scale= 61

ION =161.00
Full Scale= 61

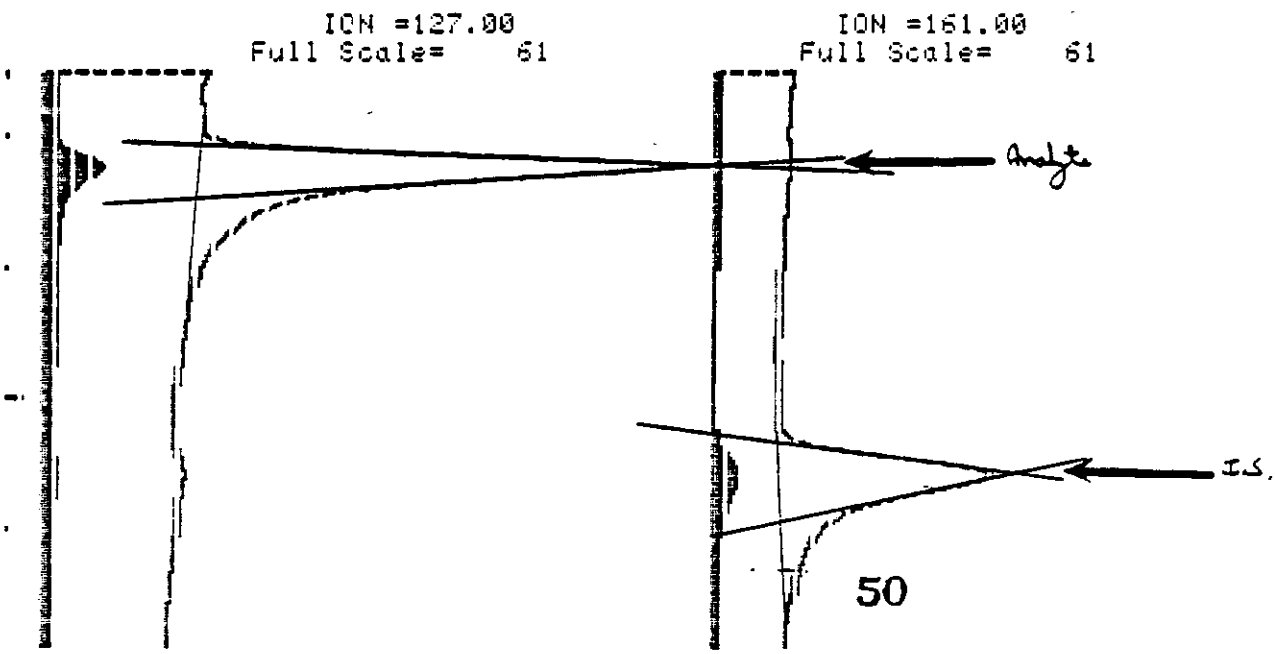

80265

Sample & No. _____ NBR 1-196-22

25 gm Control Chicken Fat - Fortified with 0.05 ppm Bayleton

Dates [illegible] 7-8-81 [illegible] 7-20-81

[illegible] Ratio [illegible] Std.

	Analyte	I.S.	Ratio
Sample	9.0 × 61.5 ÷ 2 (276.8)	12.0 × 74.5 ÷ 2 (447.0)	0.62
0.1 ppm Std	7.5 × 76.0 ÷ 2 (285.0)	12.0 × 34.5 ÷ 2 (207.0)	1.38

CONFIDENTIAL

PROPERTY OF

MOBAY CHEMICAL CORPORATION
AGRICULTURAL CHEMICALS DIVISION

** SAMPLE IDENTITY # 3.00 dated 7/20/1981 Monday

ION MASSES	127.00	161.00
DWELL TIMES (msec)	400.00	400.00
MAXIMUM ABUNDANCE	39.29	35.46

RUN 5 TOTAL RUN TIME = 6.9 AMOUNT INJECTED = 6.00

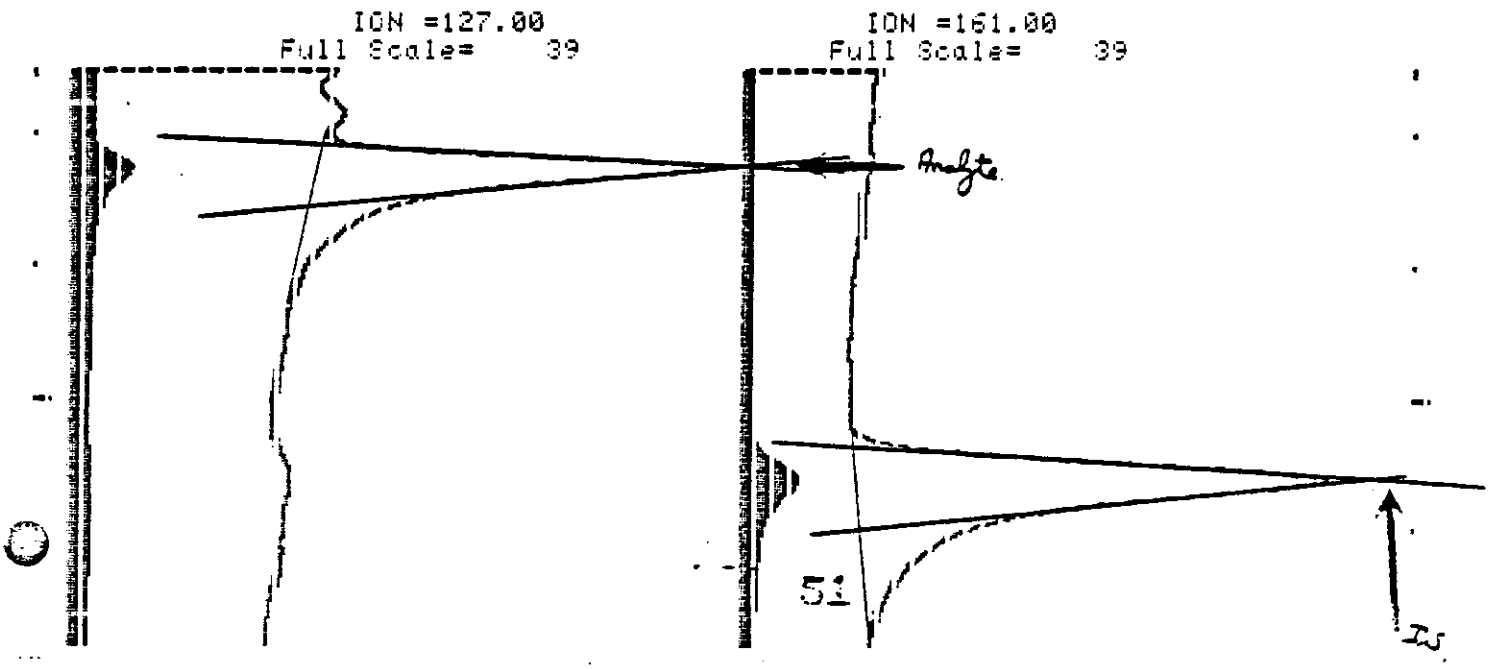

80265

Sample & No. _____ NBR 1-196-22

25gm Chicken Fat Control - Fortified with

0.1ppm Kuk 0519

Dates: on 7-8-81 in 7-20-81

Response Area mm² Ratio ... Std.

	Analyte	I.S.	Ratio
Sample	8.5×74.5 i 2 (316.6)	11.5×42.5 i 2 (250.1)	1.27
0.1ppm Std	8.0×75.0 i 2 (300.0)	12.0×37.0 i 2 (222.0)	1.35

CONFIDENTIAL

PROPERTY OF

MOBAY CHEMICAL CORPORATION
AGRICULTURAL CHEMICALS DIVISION

*** SAMPLE IDENTITY # 4.00 dated 7/20/1981 Monday

ION MASSES	127.00	161.00
DWELL TIMES (msec)	400.00	400.00
MAXIMUM ABUNDANCE	69.41	35.31

RUN 6 TOTAL RUN TIME = 6.9 AMOUNT INJECTED = 6.00

ION =127.00
Full Scale= 70

ION =161.00
Full Scale= 70

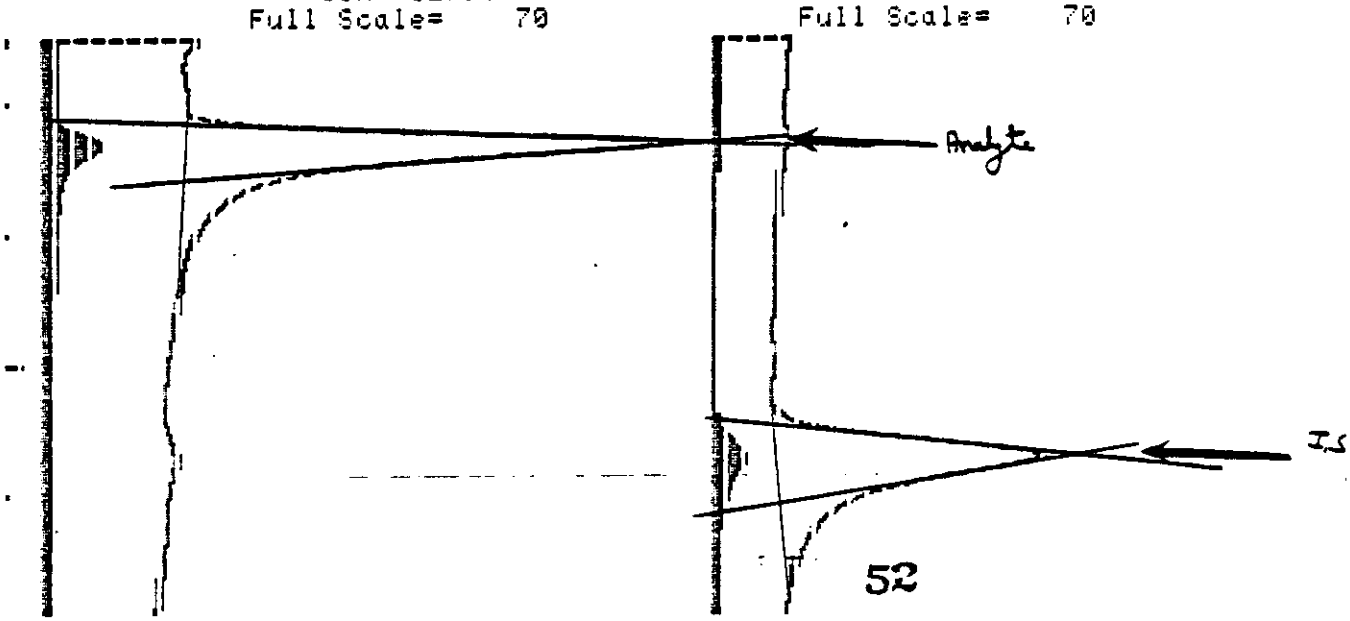

80265

Sample & No. _____ NBR 1-196-22

25gm Chicken Fat Control Sodified with

0.05ppm KWG 6519

Dates: [illegible] 7-8-81 [illegible] 7-20-81

Response: Area mm² Ratio [illegible]/Std.

	Analyte	I.S	Ratio
Sample	8.0 × 62.5 ÷ 2 (250.0)	12.0 × 66.5 ÷ 2 (399.0)	0.63
0.1ppm Std	8.0 × 75.0 ÷ 2 (300.0)	12.0 × 37.0 ÷ 2 (222.0)	1.35

CONFIDENTIAL
PROPERTY OF
MOBAY CHEMICAL CORPORATION
AGRICULTURAL CHEMICALS DIVISION

*** SAMPLE IDENTITY # 5.00 dated 7/20/1981 Monday

ION MASSES	127.00	161.00
DWELL TIMES (msec)	400.00	400.00
MAXIMUM ABUNDANCE	47.74	37.96

RUN 8 TOTAL RUN TIME = 6.9 AMOUNT INJECTED = 6.00

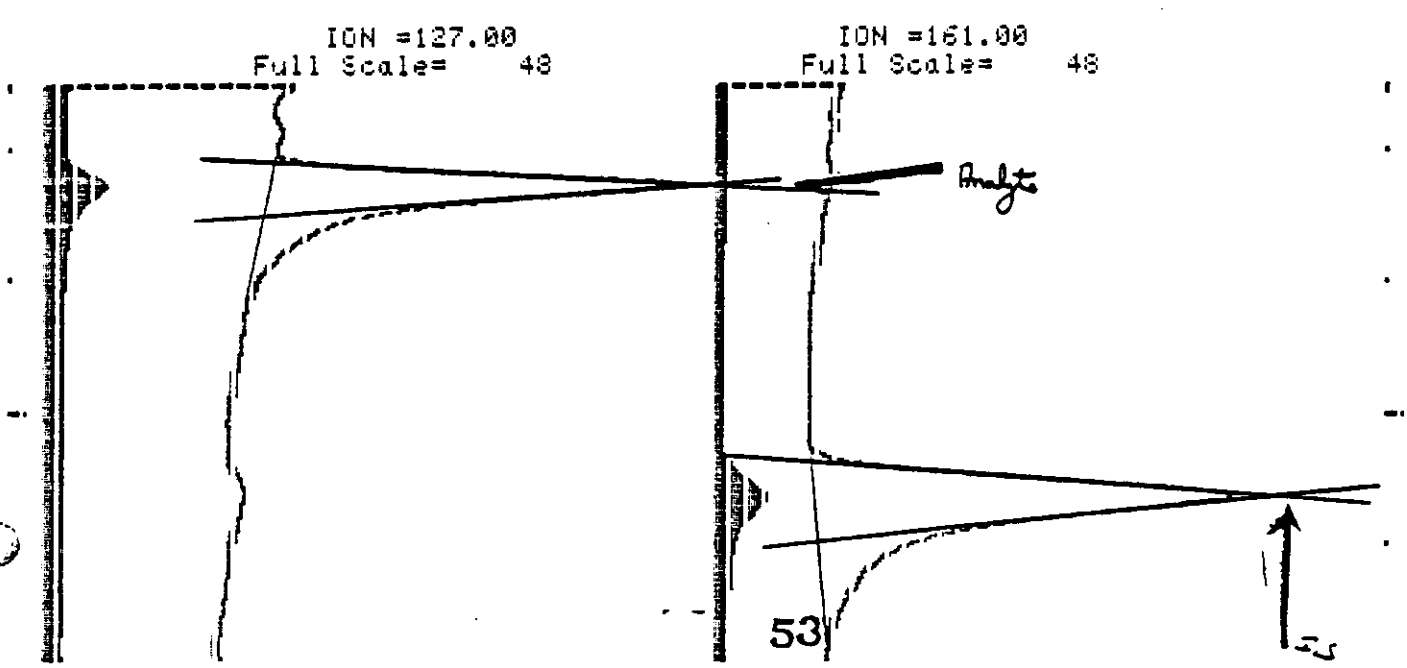

80265

Sample & No. _____ NBR 1-196-31

25 gm. Chicken Fat Control fortified with 0.1ppm KWG1640

Dates: Extraction 8-7-81 Injection 8-18-81

Response (Area mm² Ratio): Sample/Std.

	Analyte ÷ IS	Ratio
Sample	8.5X59.5÷2(252.9)	110X82.5÷2(453.8)	0.56
0.1ppm Std	6.5X75.0÷2(243.8)	13.5X52.5÷2(388.1)	0.63

CONFIDENTIAL

PROPERTY OF

MOBAY CHEMICAL CORPORATION
AGRICULTURAL CHEMICALS DIVISION

*** SAMPLE IDENTITY # 12.00 dated 8/18/1981 Tuesday

ION MASSES	127.00	161.00
DWELL TIMES (msec)	400.00	400.00
MAXIMUM ABUNDANCE	155.84	178.36

RUN 2 TOTAL RUN TIME = 7.2 AMOUNT INJECTED = 6.00

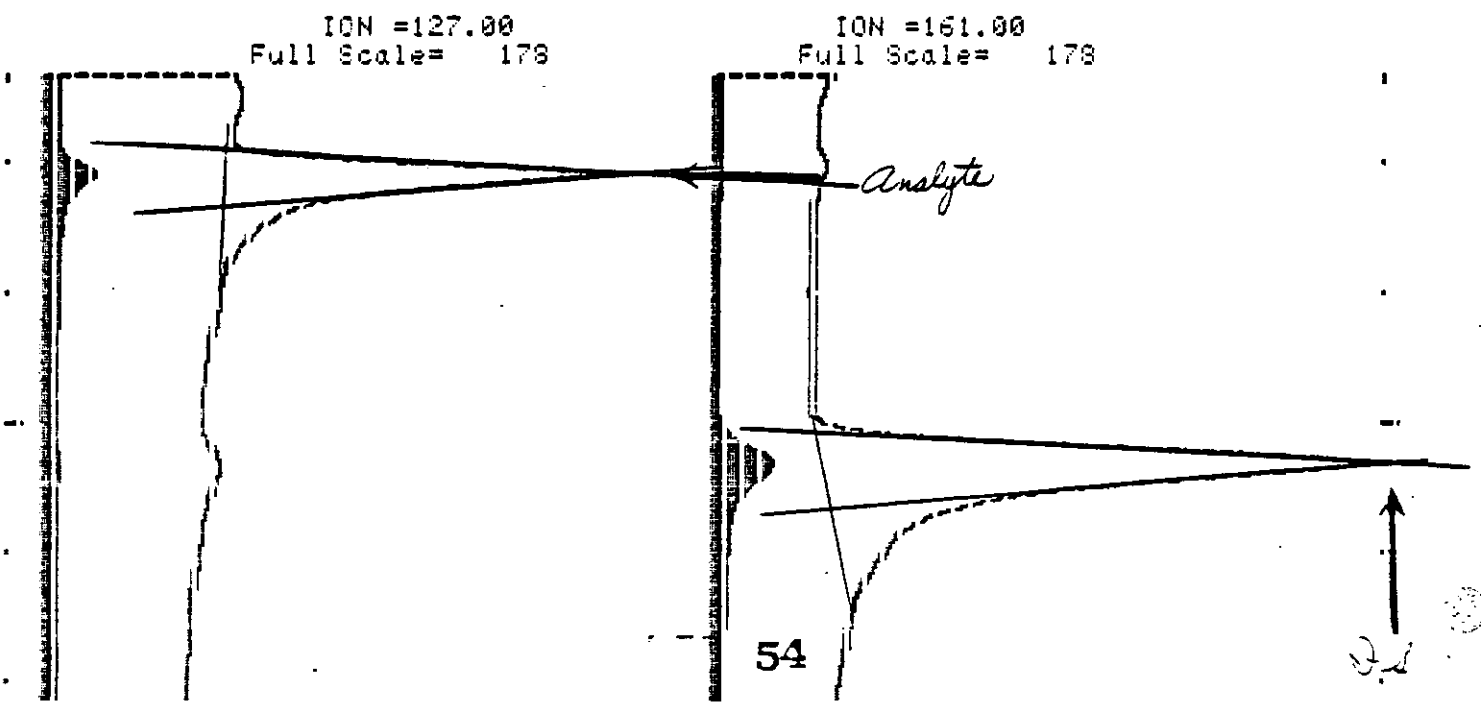

80265

Sample & No. _____ NBR 1-196-31

25 gm Chicken Fat Control fortified with 0.05 ppm KWG 1640

Dates: Extraction 8-7-81 Injection 8-18-81

Response (Ratio): Sample/Std. area mm²

	Analyte	÷ Id	Ratio
Sample	8.5 x 34.5 ÷ 2 (146.6)	11.5 x 78.5 ÷ 2 (451.4)	0.32
0.1 ppm Std	7.0 x 75.0 ÷ 2 (262.5)	13.0 x 66.5 ÷ 2 (432.2)	0.61

CONFIDENTIAL
PROPERTY OF
MOBAY CHEMICAL CORPORATION
AGRICULTURAL CHEMICALS DIVISION

** SAMPLE IDENTITY # 13.00 dated 8/18/1981 Tuesday

ION MASSES	127.00	161.00
DWELL TIMES (msec)	400.00	400.00
MAXIMUM ABUNDANCE	80.72	127.61

RUN 3 TOTAL RUN TIME = 7.2 AMOUNT INJECTED = 6.00

ION =127.00
Full Scale= 128

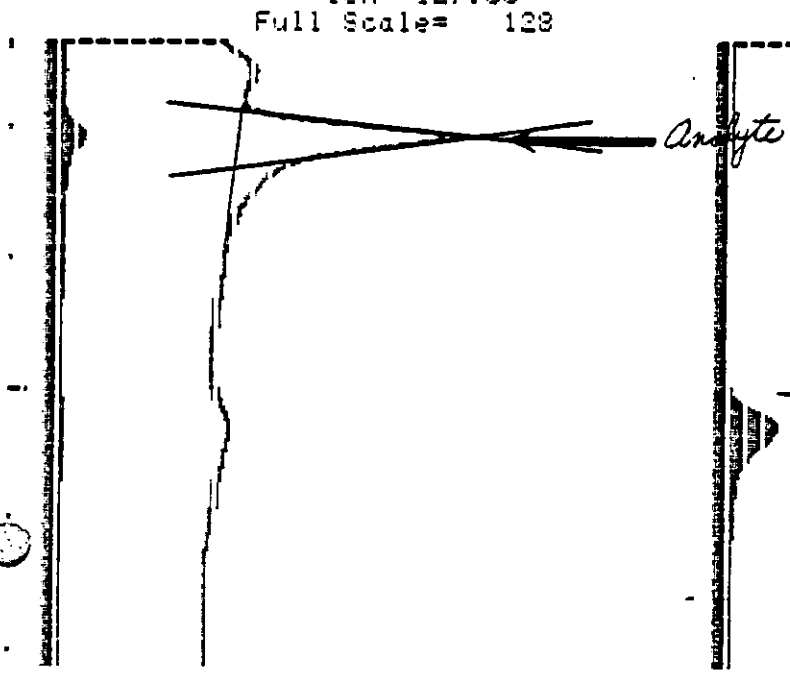

ION =161.00
Full Scale= 128

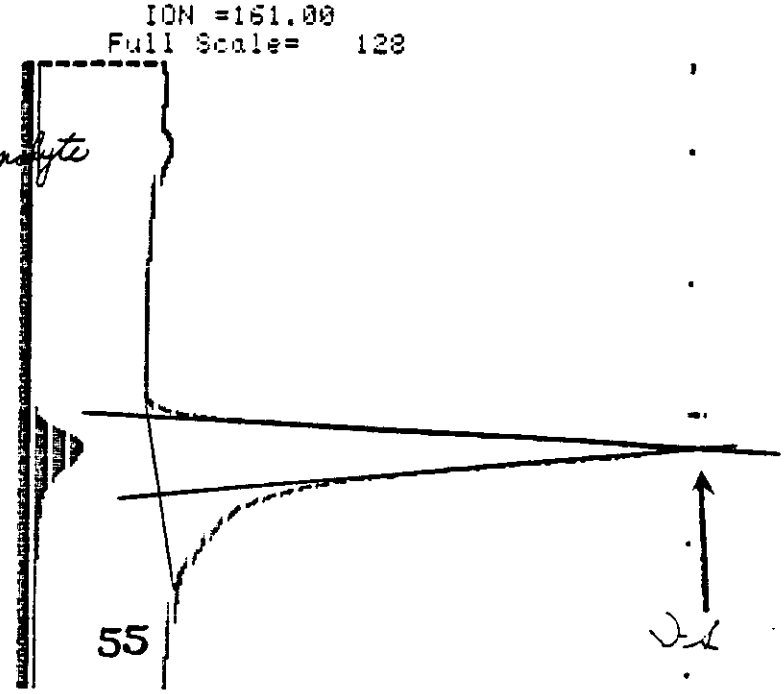

80265

Sample & No. _____ NBR 1796-22

25 gm Chicken Fat Control Fortified with

Chlorpyrifos KWG 1323

Dates: [illegible] 7-20-81 [illegible] 7-20-81

Response: Area mm² Ratio [illegible]/std.

	Analyte	I.S.	Ratio
Sample	8.0×79.0÷2 (316.0)	12.0×40.0÷2 (240.0)	1.32
Chlorpyrifos Std	8.0×81.0÷2 (324.0)	11.5×38.5÷2 (221.4)	1.46

CONFIDENTIAL

PROPERTY OF

MOBAY CHEMICAL CORPORATION
AGRICULTURAL CHEMICALS DIVISION

*** SAMPLE IDENTITY # 8.00 dated 7/20/1981 Monday

ION MASSES	127.00	161.00
DWELL TIMES (msec)	400.00	400.00
MAXIMUM ABUNDANCE	80.10	37.16

RUN12 TOTAL RUN TIME = 6.9 AMOUNT INJECTED = 6.00

ION =127.00
Full Scale= 80

ION =161.00
Full Scale= 80

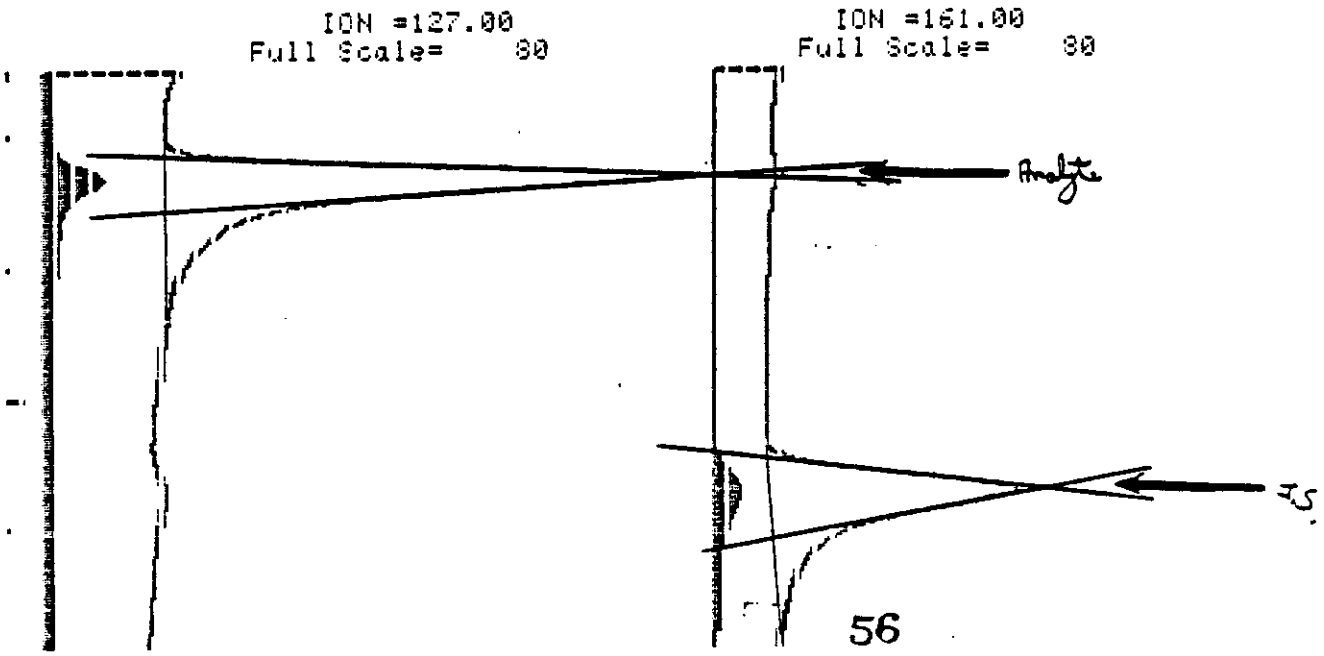

80265

Sample & No. _____ NBR 1796-22

25gm chicken Fat Control - Fortified with 0.05ppm KWG 1323

Dates: Ion 7-8-81 Ion 7-20-81

Response Area mm² Ratio ...e/Std.

	Analyte	I.S.	Ratio
Sample	8.5×68.0 ÷ 2 (289.0)	12.5×65.0 ÷ 2 (406.2)	0.71
0.1ppm Std	8.0×81.0 ÷ 2 (324.0)	11.5×38.5 ÷ 2 (221.4)	1.46

CONFIDENTIAL

PROPERTY OF

MOBAY CHEMICAL CORPORATION
AGRICULTURAL CHEMICALS DIVISION

** SAMPLE IDENTITY # 9.00 dated 7/20/1981 Monday

ION MASSES	127.00	161.00
DWELL TIMES (msec)	400.00	400.00
MAXIMUM ABUNDANCE	58.59	44.86

RUN14 TOTAL RUN TIME = 6.9 AMOUNT INJECTED = 6.00

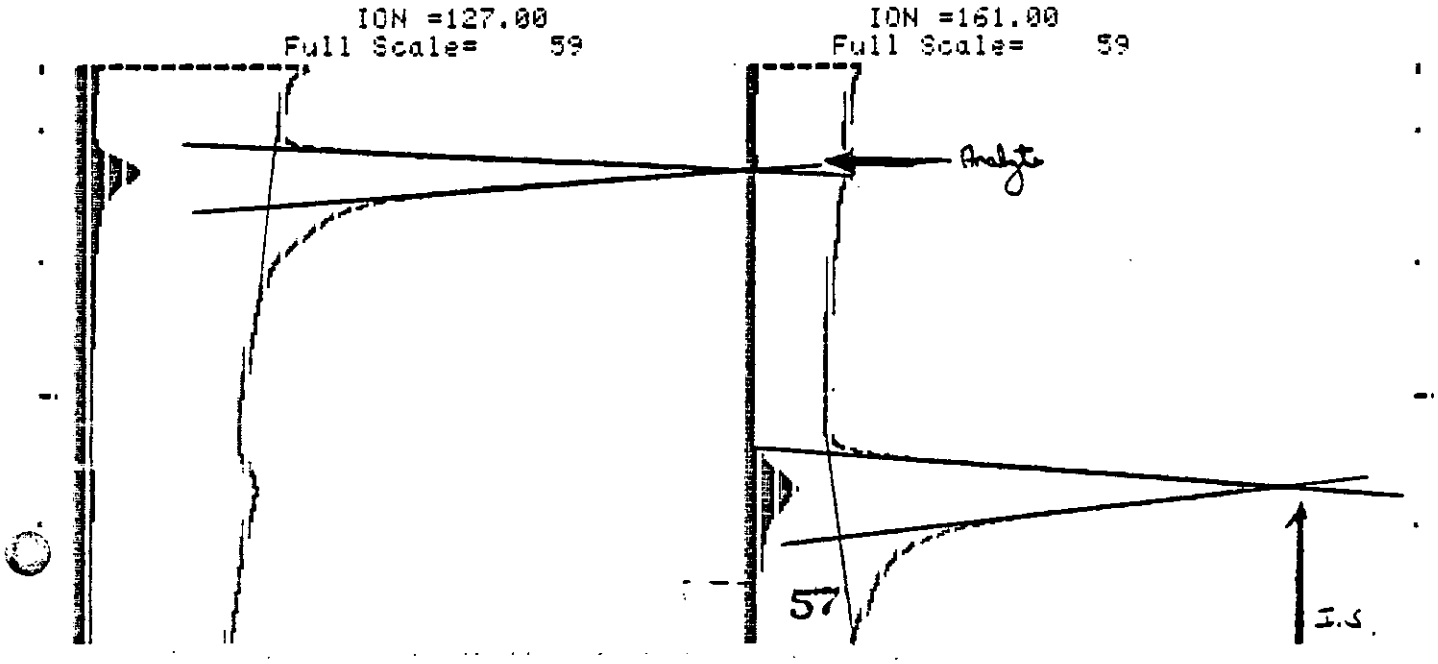

57

80265

Sample & No. _____ NBR 1-196-27

25gm Chicken Fat Control Fortified with

Galppon Xtra 1342

Dates: 7-8-81 in 7-21-81

Rest. Area mm² Ratio /std.

	Analyte	I.S.	Ratio
Sample	7.5×93.0÷2 (311.2)	12.0×38.5÷2 (231.0)	1.35
Olppon Std.	8.0×79.0÷2 (316.0)	11.0×48.5÷2 (266.8)	1.18

CONFIDENTIAL

PROPERTY OF

MOBAY CHEMICAL CORPORATION
AGRICULTURAL CHEMICALS DIVISION

*** SAMPLE IDENTITY # 10.00 dated 7/21/1981 Tuesday

ION MASSES	127.00	161.00
DWELL TIMES (msec)	400.00	400.00
MAXIMUM ABUNDANCE	181.31	80.75

RUN16 TOTAL RUN TIME = 6.9 AMOUNT INJECTED = 6.00

ION =127.00
Full Scale= 181

ION =161.00
Full Scale= 181

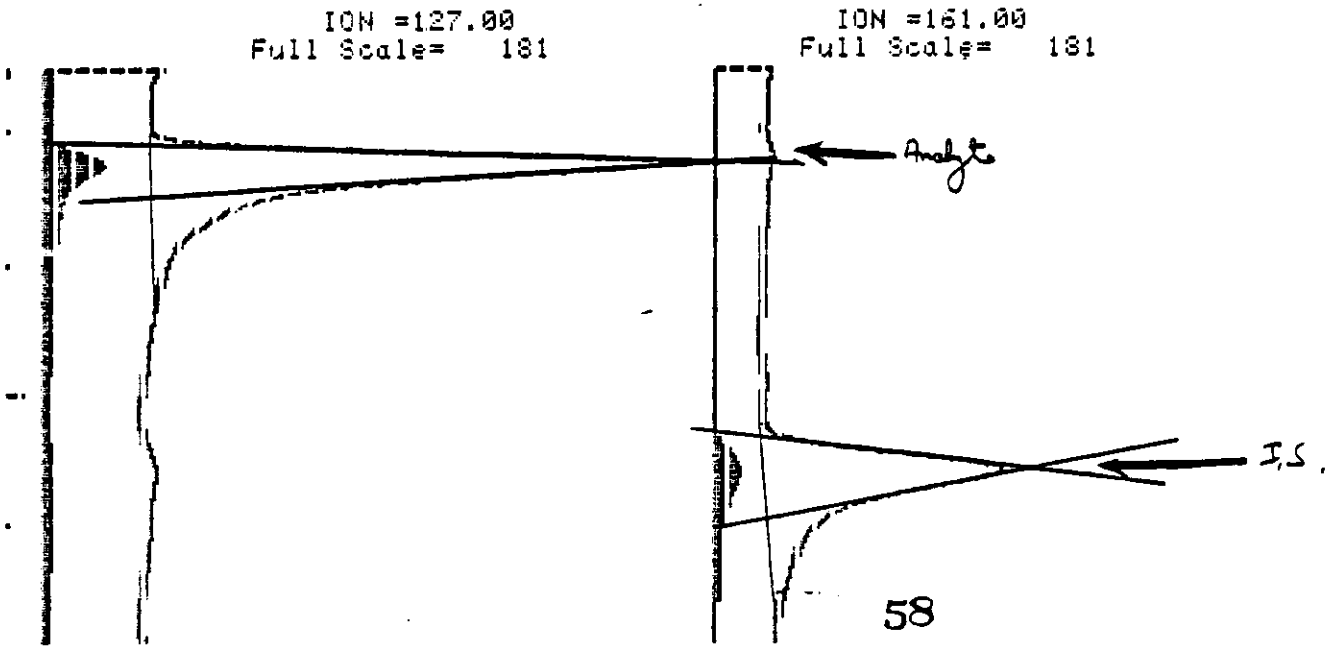

80265

Sample & No. _____ NBR 1796-22

25 gm Chicken Fat Control Spiked with

0.05 ppm MUSC 1342

Dates: Ex: 7-8-81 In 7-21-81

Resp: Arrowsmith Ratio Std.

	Analyte	I.S.	Ratio
Sample	9.0 x 55.5 : 2 (249.8)	12.5 x 83.0 : 2 (518.8)	0.48
0.1 ppm Std	7.5 x 86.0 : 2 (322.5)	12.5 x 48.5 : 2 (303.1)	1.06

CONFIDENTIAL

PROPERTY OF

MOBAY CHEMICAL CORPORATION
AGRICULTURAL CHEMICALS DIVISION

*** SAMPLE IDENTITY # 11.00 dated 7/21/1981 Tuesday

ION MASSES	127.00	161.00
DWELL TIMES (msec)	400.00	400.00
MAXIMUM ABUNDANCE	68.04	73.92

RUN17 TOTAL RUN TIME = 6.9 AMOUNT INJECTED = 6.00

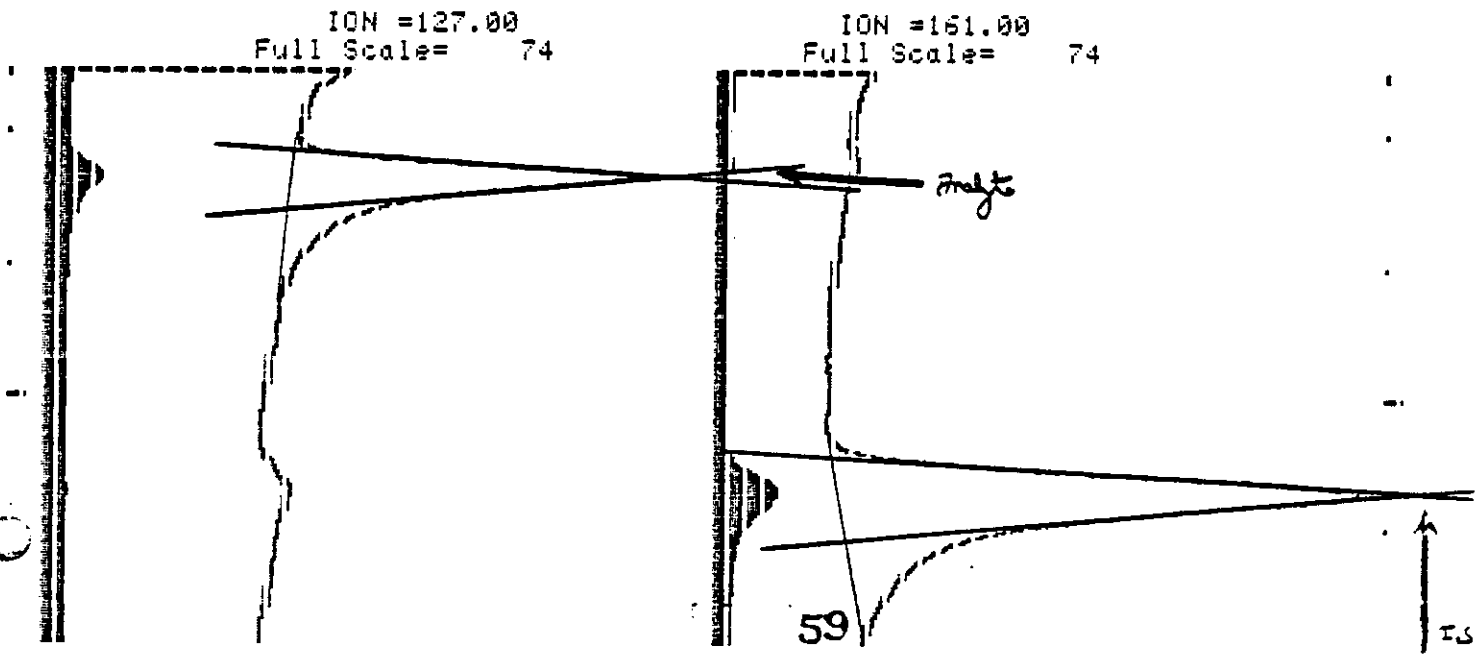

80265

(Typical Std used for Skin Samples)

Sample & No. _____ NBR 1-1910-32

0.1ppm Std hydrolyzed and derivatized Bayleton

Dates: Extraction 8-7-81 Injection 8-17-81

Area mm²

Response (Ratio) Sample/Std.

Analyte ÷ IS Ratio

Sample 0.1ppm Std. 8.5x72.0÷2(306.0) 11.5x61.0÷2(350.8) 0.87

CONFIDENTIAL

PROPERTY OF

MOBAY CHEMICAL CORPORATION
AGRICULTURAL CHEMICALS DIVISION

*** SAMPLE IDENTITY # 14.00 dated 8/17/1981 Monday

ION MASSES	127.00	161.00
DWELL TIMES (msec)	400.00	400.00
MAXIMUM ABUNDANCE	89.69	73.67

RUN 1 TOTAL RUN TIME = 7.2 AMOUNT INJECTED = 6.00

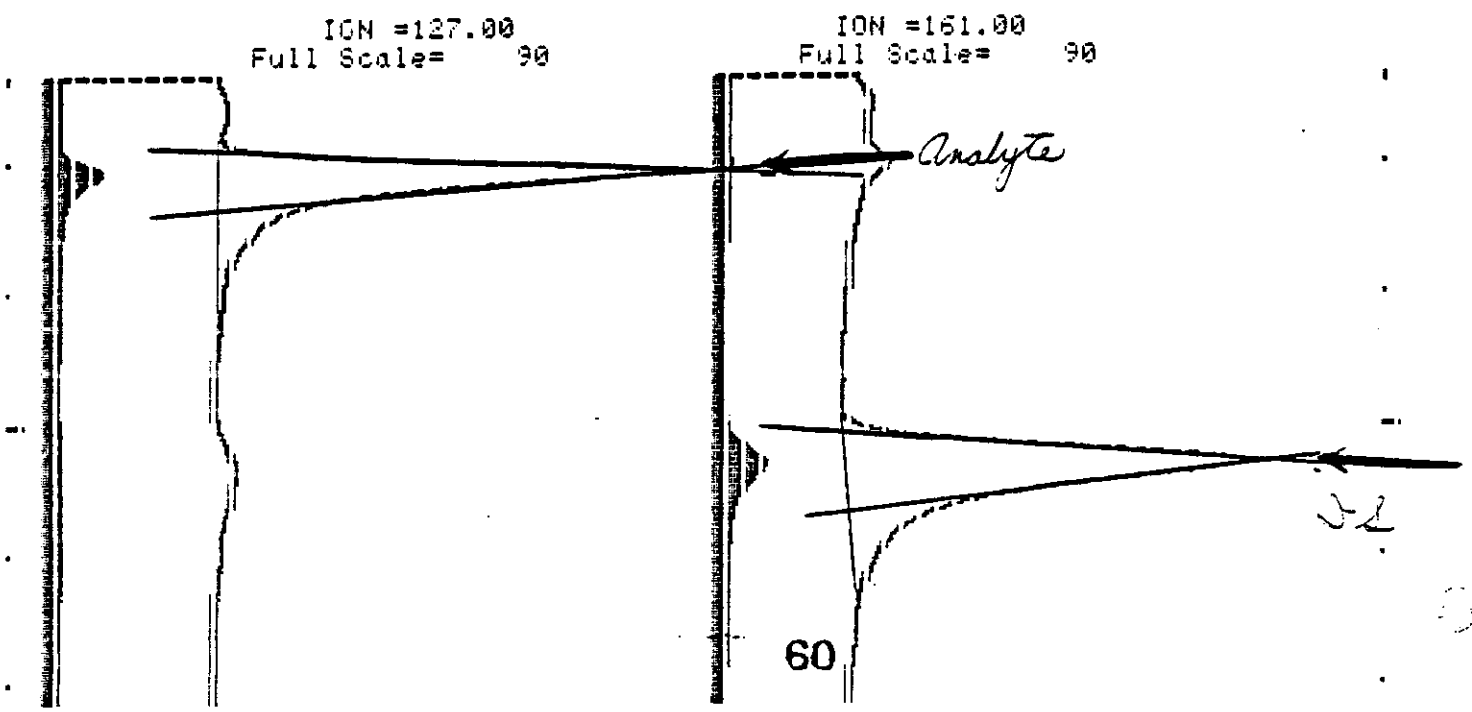

80265

Sample & No. _____ NBR 1-196-32

25gm. Chicken Skin Control

Dates: Extraction 8-7-81 Injection 8-17-81

Response (area mm / Ratio): Sample/Std.

	Analyte	÷ Is	Ratio
Sample	6.0x11.5 ÷ 2 (34.5)	13.0x75.0 ÷ 2 (487.5)	0.07
0.1ppm Std	8.5x72.0 ÷ 2 (306.0)	11.5x64.0 ÷ 2 (368.0)	0.83

CONFIDENTIAL

PROPERTY OF

MOBAY CHEMICAL CORPORATION
AGRICULTURAL CHEMICALS DIVISION

*** SAMPLE IDENTITY # 1.00 dated 8/17/1981 Monday

ION MASSES	127.00	161.00
DWELL TIMES (msec)	400.00	400.00
MAXIMUM ABUNDANCE	32.39	60.10

RUN 2 TOTAL RUN TIME = 7.2 AMOUNT INJECTED = 6.00

ION =127.00
Full Scale= 60

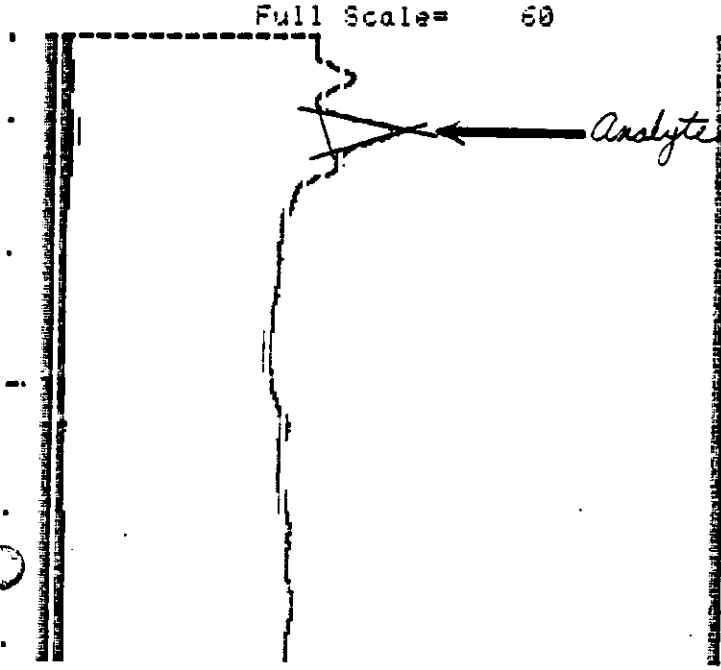

ION =161.00
Full Scale= 60

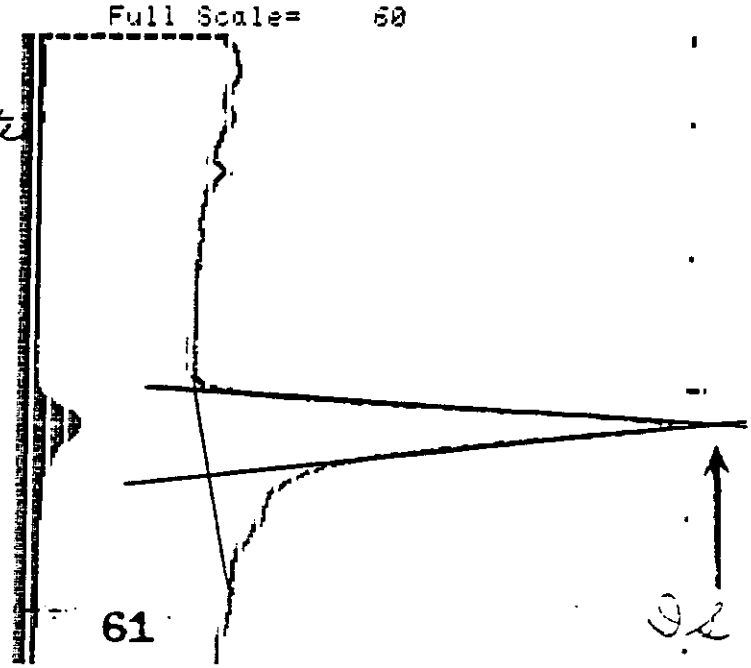

80265

Sample & No. _____ NBR L196-32

25 gm Chicken Skin Control

fortified with 0.1 ppm Bayleton

Dates: Extraction 8-7-81 Injection 8-17-81

Response (Area mm / Ratio): Sample/Std.

	Analyte	÷ IS	Ratio
Sample	8.5*74.0:2 (314.5)	10.0*60.5:2 (363.0)	0.87
0.1 ppm Std	8.0*75.0:2 (300.0)	12.0*62.5:2 (375.0)	0.80

CONFIDENTIAL

PROPERTY OF

MOBAY CHEMICAL CORPORATION
AGRICULTURAL CHEMICALS DIVISION

*** SAMPLE IDENTITY # 2.00 dated 8/17/1981 Monday

ION MASSES	127.00	161.00
DWELL TIMES (msec)	400.00	400.00
MAXIMUM ABUNDANCE	109.43	83.45

RUN 3 TOTAL RUN TIME = 7.2 AMOUNT INJECTED = 6.00

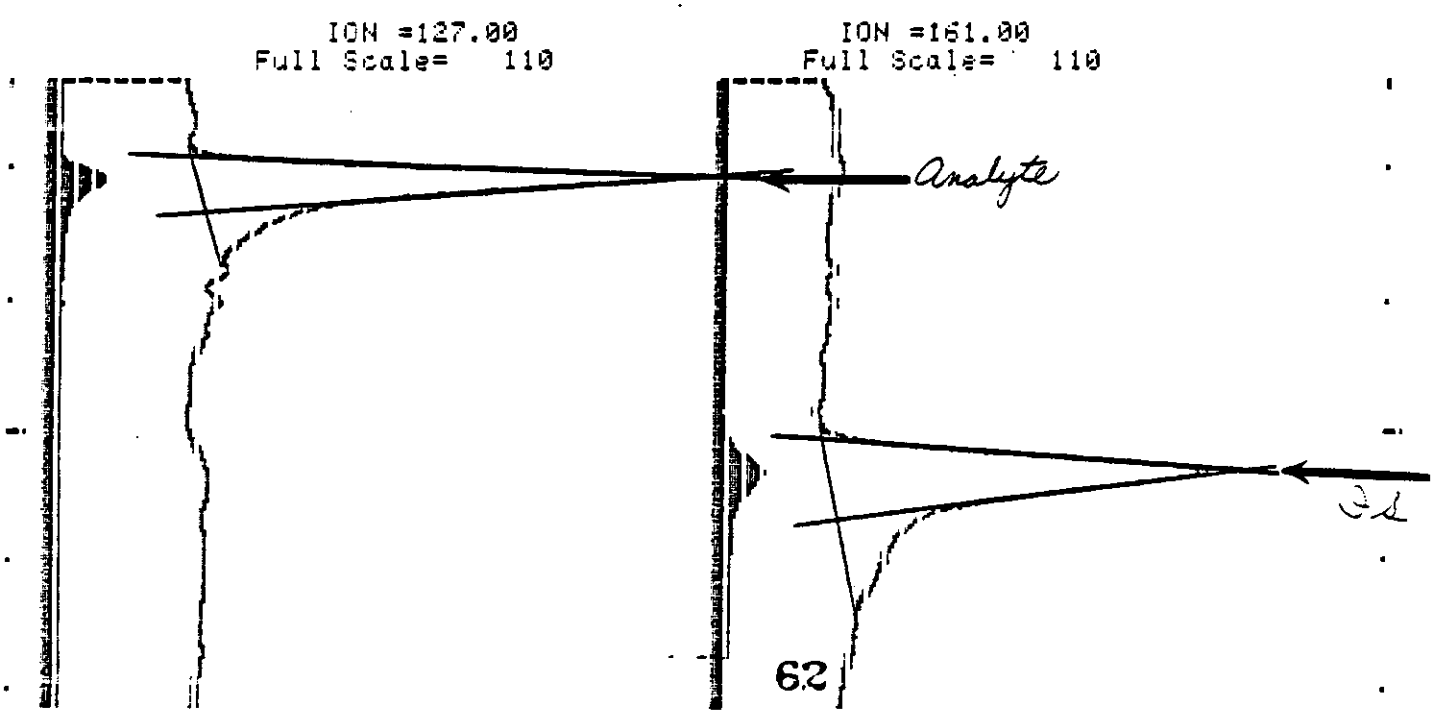

80265

Sample & No. _____ NBR 1-191-37

25 gm Chicken Skin Control fortified with 0.05 ppm Bayleton

Dates: Extraction 8-7-81 Injection 8-17-81

Response (Area mm Ratio): Sample/Std.

	Analyte	÷ IS	Ratio
Sample	8.5 x 54.0 ÷ 2 (229.5)	12.5 x 80.0 ÷ 2 (500.0)	0.46
0.1 ppm Std	8.0 x 75.0 ÷ 2 (300.0)	12.0 x 62.5 ÷ 2 (375.0)	0.80

CONFIDENTIAL

PROPERTY OF

MOBAY CHEMICAL CORPORATION
AGRICULTURAL CHEMICALS DIVISION

*** SAMPLE IDENTITY # 3.00 dated 8/17/1981 Monday

ION MASSES	127.00	161.00
DWELL TIMES (msec)	400.00	400.00
MAXIMUM ABUNDANCE	80.10	98.62

RUN 5 TOTAL RUN TIME = 7.2 AMOUNT INJECTED = 6.00

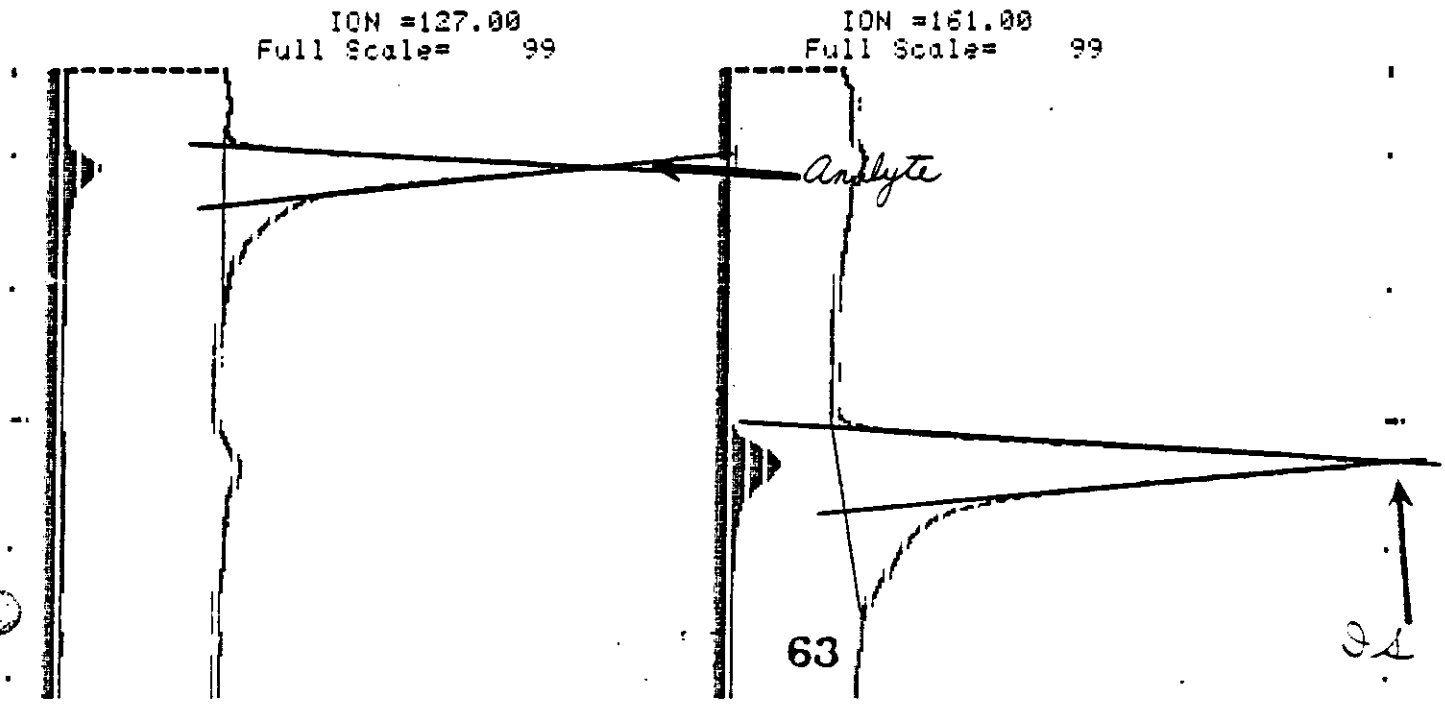

80265

Sample & No. _____ NBR 1-196-37

25gm Chicken Skin Control, fortified with 0.1ppm KWH 0619

Dates: Extraction 8-7-81 Injection 8-17-81

Area in m^2

Response (Ratio): Sample/Std.

	Analyte	÷ IS	Ratio
Sample	8.5X79.0÷2(335.8)	11.5X65.0÷2(373.8)	0.90
0.1ppm Std	8.0X76.5÷2(306.0)	12.0X63.5÷2(381.0)	0.80

CONFIDENTIAL

PROPERTY OF

MOBAY CHEMICAL CORPORATION
AGRICULTURAL CHEMICALS DIVISION

*** SAMPLE IDENTITY # 4.00 dated 8/17/1981 Monday

ION MASSES	127.00	161.00
DWELL TIMES (msec)	400.00	400.00
MAXIMUM ABUNDANCE	203.61	158.77

RUN 6 TOTAL RUN TIME = 7.2 AMOUNT INJECTED = 6.00

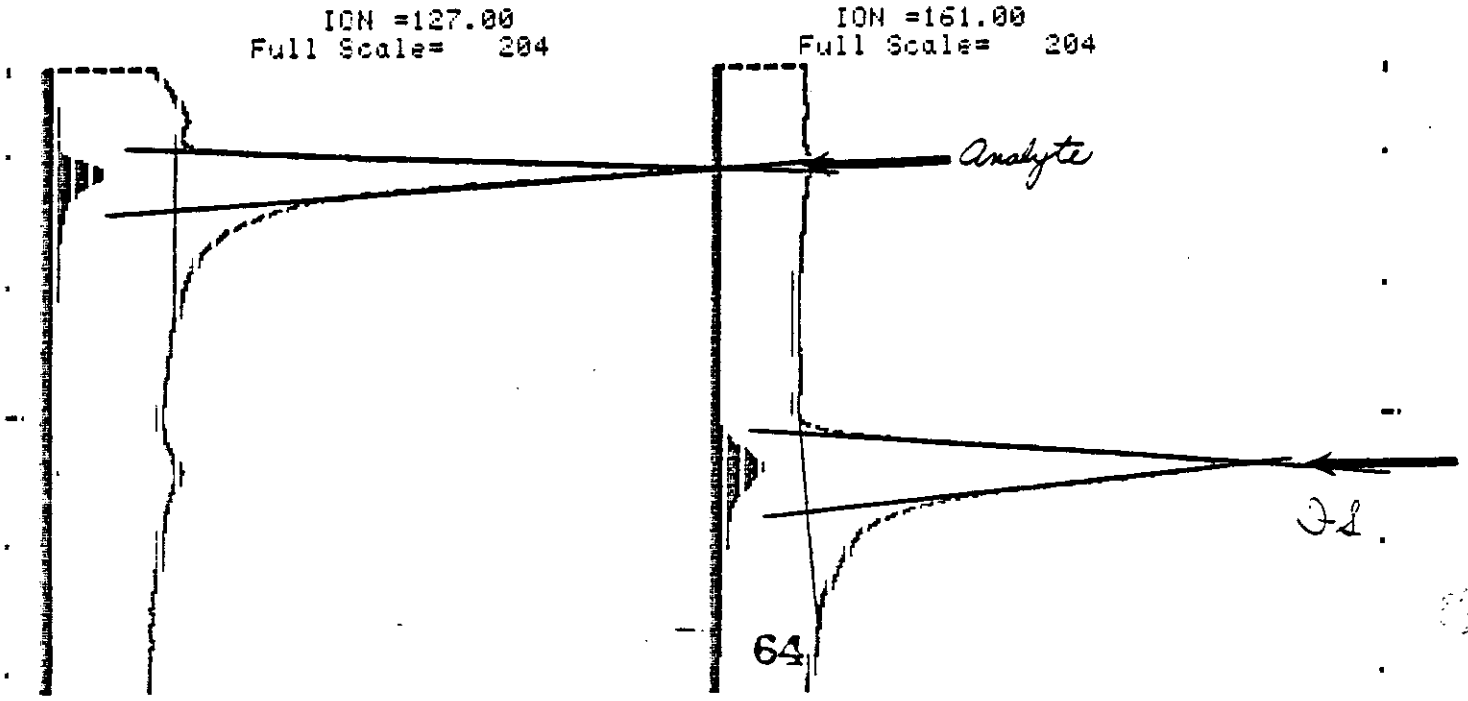

80265

Sample & No. _____ NBR 1-196-37

25gm Chicken Skin Control fortified with 0.05 ppm VUM0519

Dates: Extraction 8-7-81 Injection 8-17-81

Response (Area mm² / Ratio): Sample/Std.

	Analyte	÷ IS	Ratio
Sample	8.0x53.5÷2(214.0)	11.5x83.0÷2(477.2)	0.45
0.1 ppm Std	8.0x76.5÷2(306.0)	12.0x63.5÷2(381.0)	0.80

CONFIDENTIAL
PROPERTY OF
MOBAY CHEMICAL CORPORATION
AGRICULTURAL CHEMICALS DIVISION

*** SAMPLE IDENTITY # 5.00 dated 8/17/1981 Monday

ION MASSES	127.00	161.00
DWELL TIMES (msec)	400.00	400.00
MAXIMUM ABUNDANCE	112.44	153.42

RUN 8 TOTAL RUN TIME = 7.2 AMOUNT INJECTED = 6.00

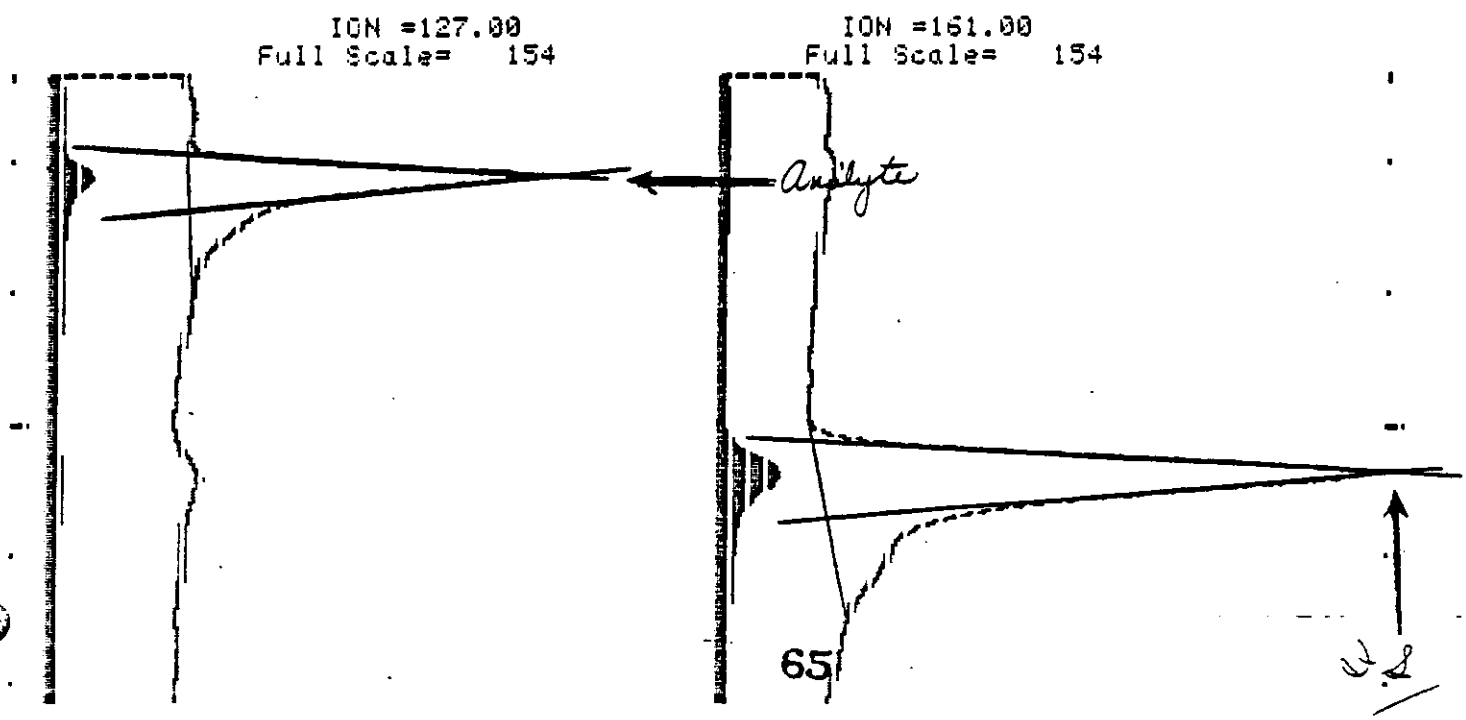

80265

Sample & No. _____ NBR 1-191-37

25gm Chicken Skin Control Fortified with 0.1ppm KWG1640

Dates: Extraction 8-7-81 Injection 8-17-81

Area in m^2

Response (Ratio): Sample/Std.

	Analyte ÷ IS	Ratio
Sample	8.5X77.8 ÷ 2(327.2) 12.0X85.5 ÷ 2(513.0)	0.64
0.1ppm Std.	7.5X76.5 ÷ 2(281.9) 12.5X75.0 ÷ 2(448.8)	0.61

CONFIDENTIAL

PROPERTY OF

MOBAY CHEMICAL CORPORATION
AGRICULTURAL CHEMICALS DIVISION

*** SAMPLE IDENTITY # 6.00 dated 8/17/1981 Monday

ION MASSES	127.00	161.00
DWELL TIMES (msec)	400.00	400.00
MAXIMUM ABUNDANCE	210.68	202.60

RUN 9 TOTAL RUN TIME = 7.2 AMOUNT INJECTED = 6.00

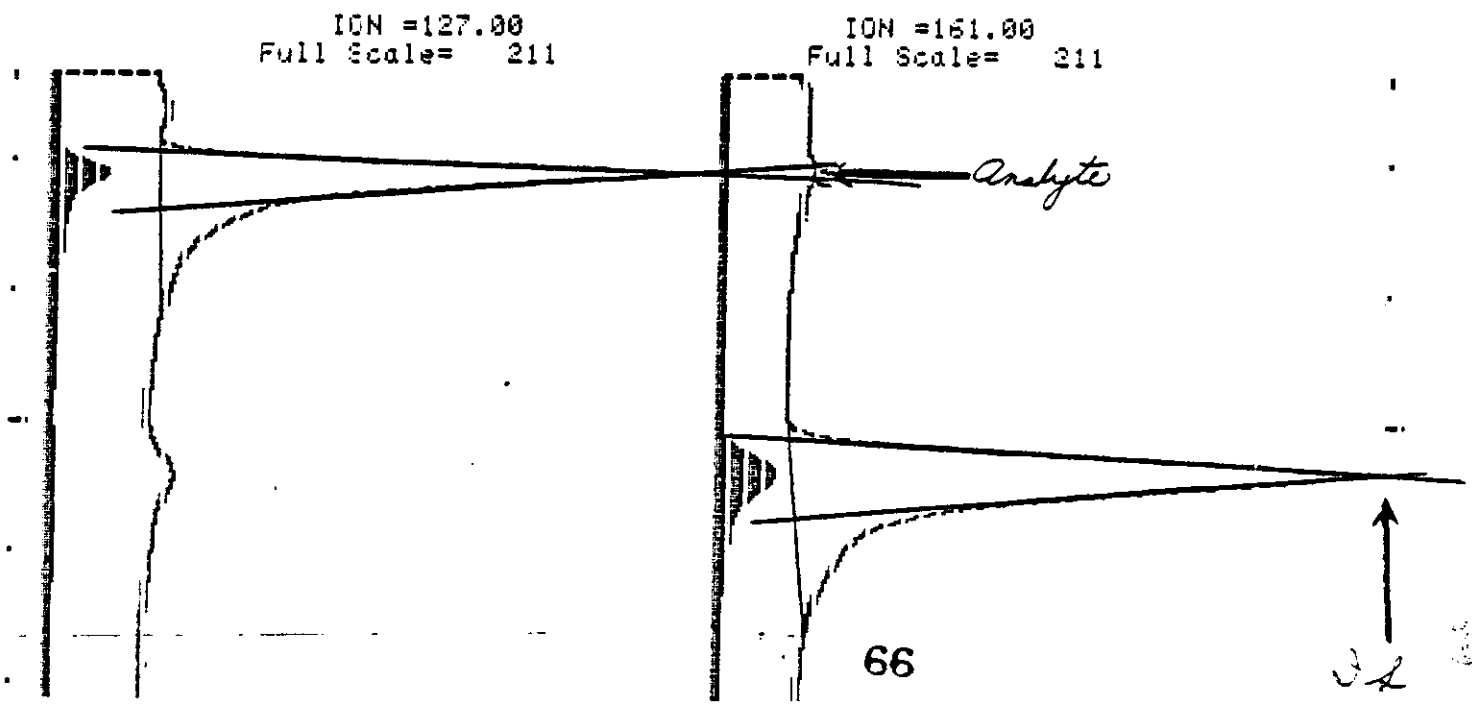

80265

Sample & No. _____ NBR 1-191-39

2.5gm Chicken Liver Control, spiked with 0.05ppm KuH 1640

Dates: Extraction 8-7-81 Injection 8-17-81

Response (Ratio): Sample/Std.

	Analyte ÷ IS	Ratio
Sample	7.5x44.0÷2 (165.0) 11.5x01.5÷2 (41.86)	0.35
0.1ppm Std	7.5x26.5÷2 (99.9) 12.5x22.5÷2 (468.8)	0.41

CONFIDENTIAL

PROPERTY OF

MOBAY CHEMICAL CORPORATION
AGRICULTURAL CHEMICALS DIVISION

*** SAMPLE IDENTITY # 7.00 dated 8/17/1981 Monday

ION MASSES	127.00	161.00
DWELL TIMES (msec)	400.00	400.00
MAXIMUM ABUNDANCE	80.97	123.27

RUN11 TOTAL RUN TIME = 7.2 AMOUNT INJECTED = 6.00

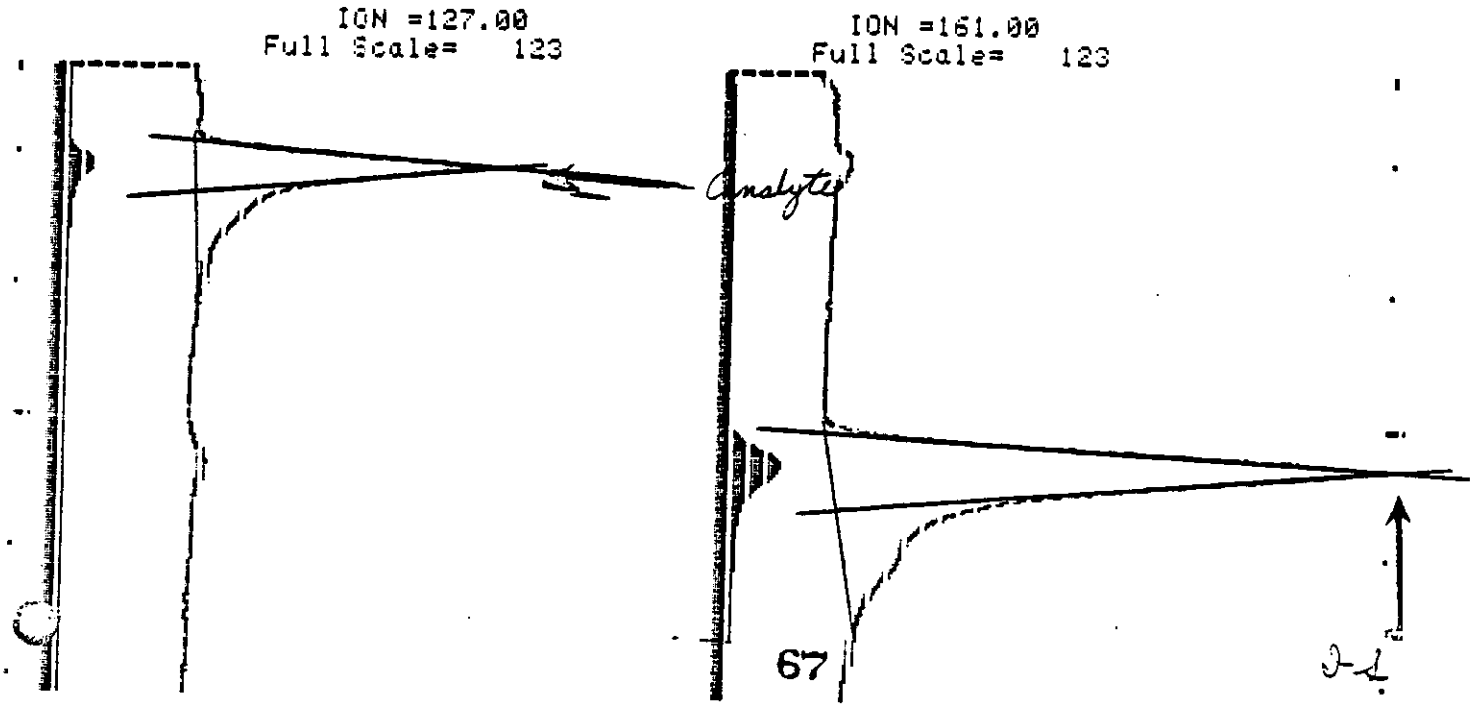

80265

Sample & No. _____ NBR 1-196-37

25gm Chicken Skin Control fortified with 0.1ppm KWG 1323

Dates: Extraction 8-7-81 Injection 8-12-81

Area mm²

Response (Ratio): Sample/Std.

	Analyte	÷ IS	Ratio
Sample	7.0x80.0 ÷ 2 (280.0)	12.0x62.0 ÷ 2 (372.0)	0.75
0.1ppm Std	8.0x77.5 ÷ 2 (310.0)	12.5x74.5 ÷ 2 (465.6)	0.67

CONFIDENTIAL
PROPERTY OF
MOBAY CHEMICAL CORPORATION
AGRICULTURAL CHEMICALS DIVISION

*** SAMPLE IDENTITY # 8.00 dated 8/17/1981 Monday

ION MASSES	127.00	161.00
DWELL TIMES (msec)	400.00	400.00
MAXIMUM ABUNDANCE	197.84	141.92

RUN12 TOTAL RUN TIME = 7.2 AMOUNT INJECTED = 6.00

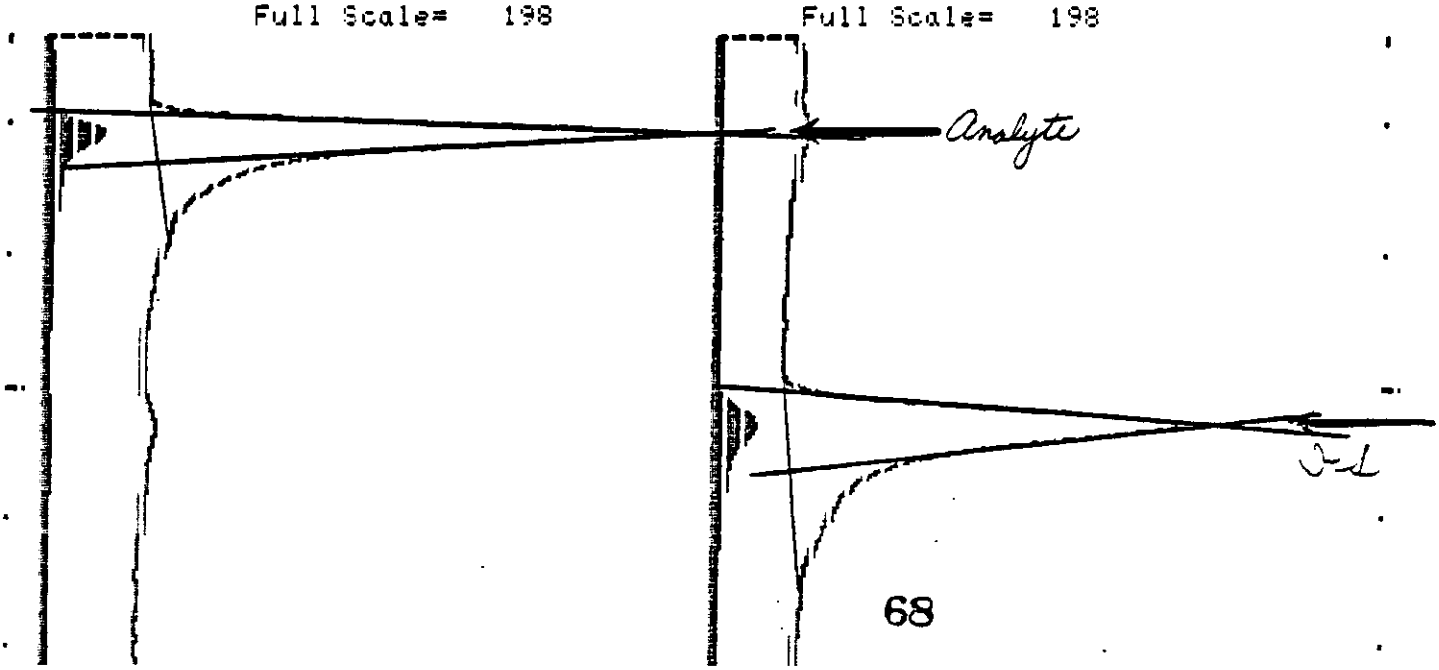

80265

Sample & No. _____ NBR 1-491-32

25 gm Chicken Skin Control

fortified with 0.05 ppm KWH 1323

Dates: Extraction 8-7-81 Injection 8-17-81

Response (Ratio): Sample/Std. area mm²

Analyte ÷ I.S. Ratio

Sample 8.5 x 51.5 ÷ 2(218.9) 12.5 x 85.0 ÷ 2(531.2) 0.41

0.1 ppm Std 8.0 x 77.5 ÷ 2(310.0) 12.5 x 74.5 ÷ 2(465.6) 0.67

CONFIDENTIAL

PROPERTY OF

MOBAY CHEMICAL CORPORATION

AGRICULTURAL CHEMICALS DIVISION

*** SAMPLE IDENTITY # 9.00 dated 8/17/1981 Monday

ION MASSES	127.00	161.00
DWELL TIMES (msec)	400.00	400.00
MAXIMUM ABUNDANCE	98.33	135.12

RUN14 TOTAL RUN TIME = 7.2 AMOUNT INJECTED = 6.00

ION =127.00
Full Scale= 135

ION =161.00
Full Scale= 135

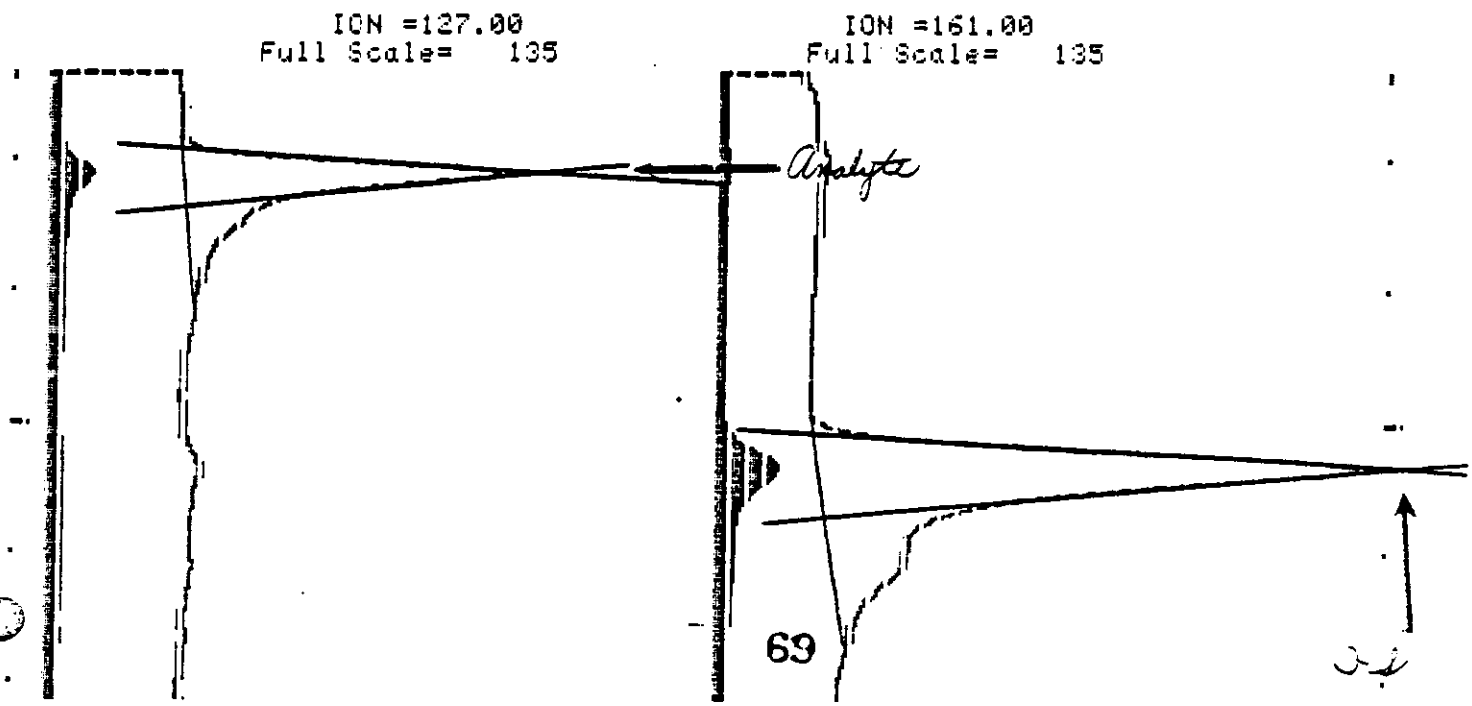

80265

Sample & No. _____ NBR L-119-37

25gm Chicken Skin Control fortified with 0.1ppm KWH 1342

Dates: Extraction 8-7-81 Injection 8-17-81

Area mm²

Response (Ratio): Sample/Std.

	Analyte	÷ I.S.	Ratio
Sample	8.0X78.0 ÷ 2 (312.0)	12.0X78.5 ÷ 2 (471.0)	0.66
0.1ppm Std	7.5X80.0 ÷ 2 (300.0)	12.5X79.0 ÷ 2 (493.8)	0.61

CONFIDENTIAL

PROPERTY OF

MOBAY CHEMICAL CORPORATION
AGRICULTURAL CHEMICALS DIVISION

*** SAMPLE IDENTITY # 10.00 dated 8/17/1981 Monday

ION MASSES	127.00	161.00
DWELL TIMES (msec)	400.00	400.00
MAXIMUM ABUNDANCE	161.58	148.08

RUN15 TOTAL RUN TIME = 7.2 AMOUNT INJECTED = 6.00

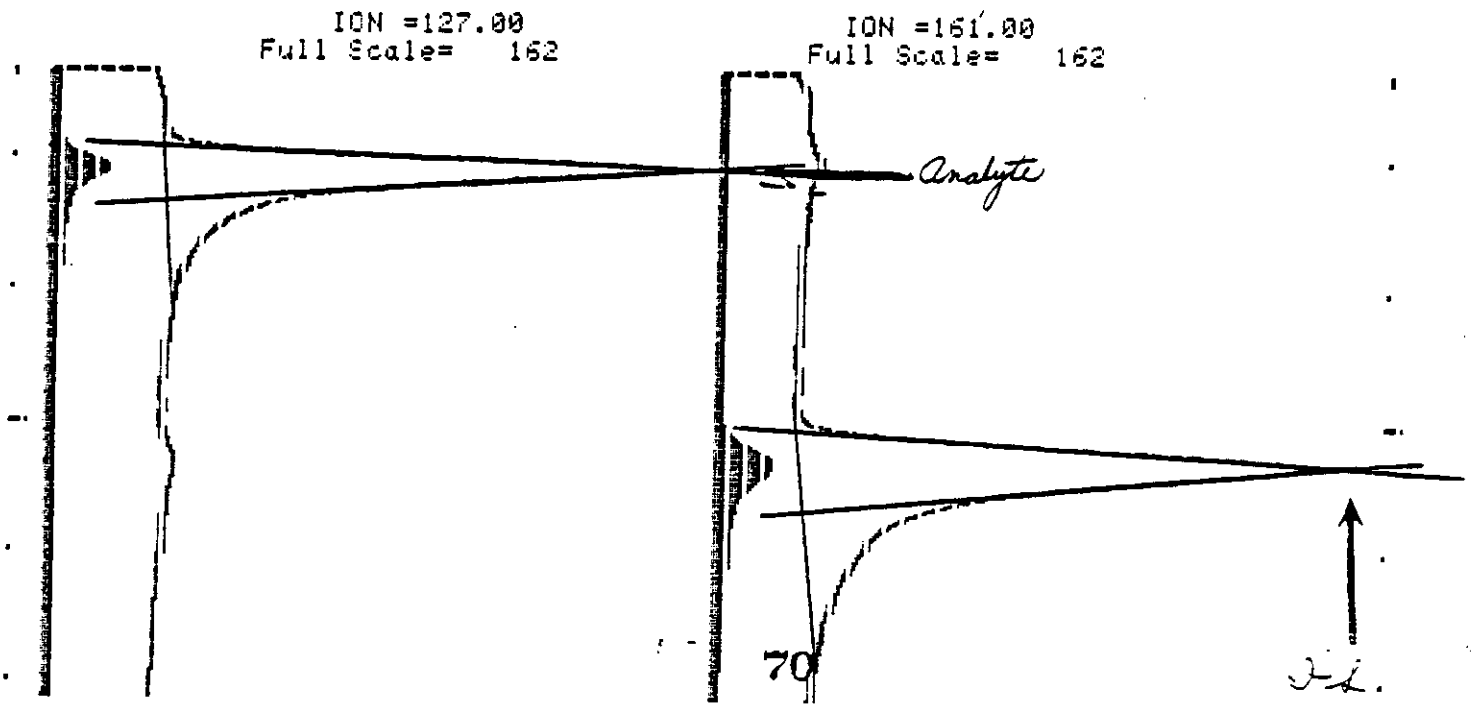

80265

Sample & No. _____ NBR 1-191-32

25 gm Chicken Skin Control fortified with .05 ppm RWG 1342

Dates: Extraction 8-7-81 Injection 8-17-81

Response (Area mm / Ratio): Sample/Std.

	Analyte	I.S.	Ratio
Sample	7.0x62.5 ÷ 2 (218.8)	13.0x85.0 ÷ 2 (552.5)	0.40
0.1ppm Std	2.5x80.0 ÷ 2 (300.0)	12.5x79.0 ÷ 2 (493.8)	0.61

CONFIDENTIAL

PROPERTY OF

MOBAY CHEMICAL CORPORATION
AGRICULTURAL CHEMICALS DIVISION

*** SAMPLE IDENTITY # 11.00 dated 8/17/1981 Monday

ION MASSES	127.00	161.00
DWELL TIMES (msec)	400.00	400.00
MAXIMUM ABUNDANCE	138.90	170.26

RUN17 TOTAL RUN TIME = 7.2 AMOUNT INJECTED = 6.00

ION =127.00
Full Scale= 170

ION =161.00
Full Scale= 170

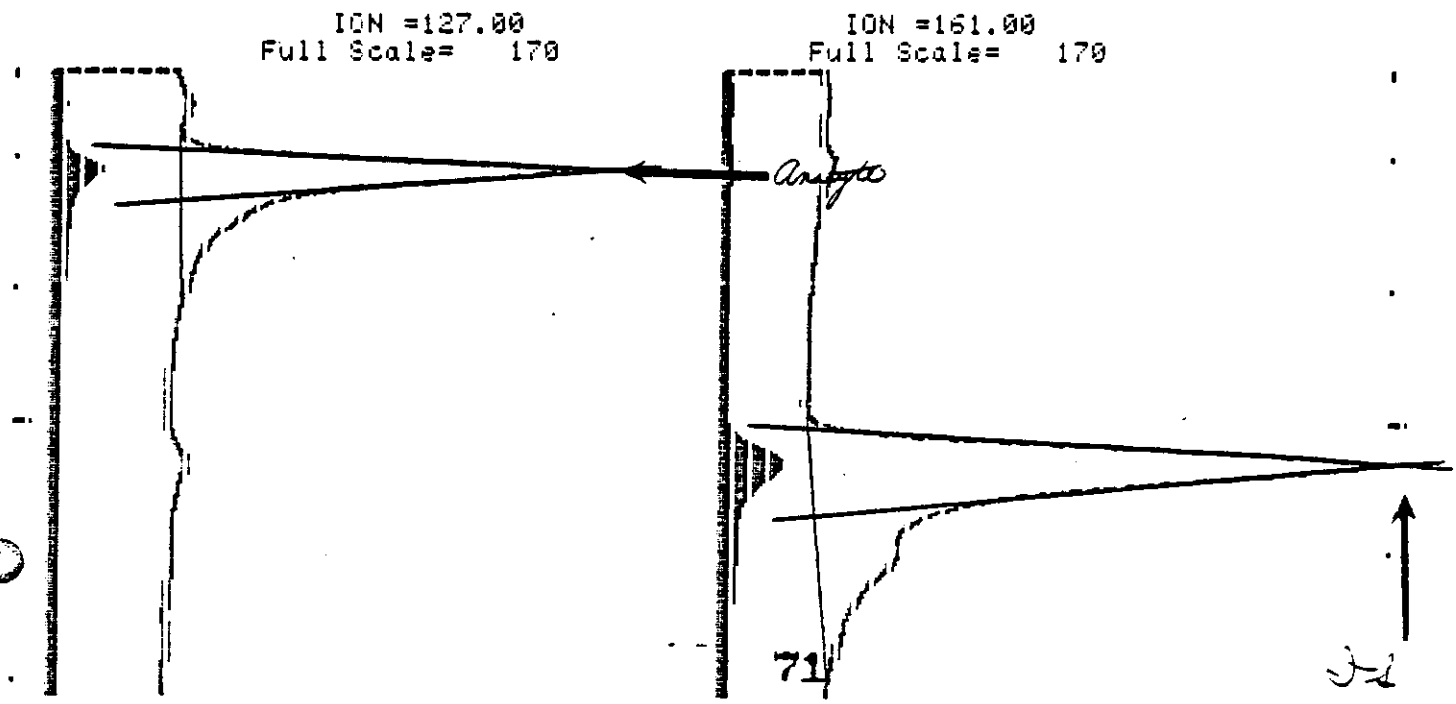

80265

(Typical Std used for Liver Samples)

Sample & No. _____ NBR 1-196-26

0.1ppm Std. hydrolyzed and derivatized Cayleton

Dates: Extraction 7-29-81 Injection 8-5-81

Area mm²

Response (Ratio : Sample/Std.

Analyte ÷ IS Ratio

Sample 0.1ppm Std. 8.0x70.0÷2(280.0)12.0x43.5÷2(261.0)1.07

CONFIDENTIAL

PROPERTY OF

MOBAY CHEMICAL CORPORATION
AGRICULTURAL CHEMICALS DIVISION

*** SAMPLE IDENTITY # 12.00 dated 8/ 5/1981 Wednesday

ION MASSES	127.00	161.00
DWELL TIMES (msec)	400.00	400.00
MAXIMUM ABUNDANCE	159.60	88.34

RUN 1 TOTAL RUN TIME = 7.2 AMOUNT INJECTED = 6.00

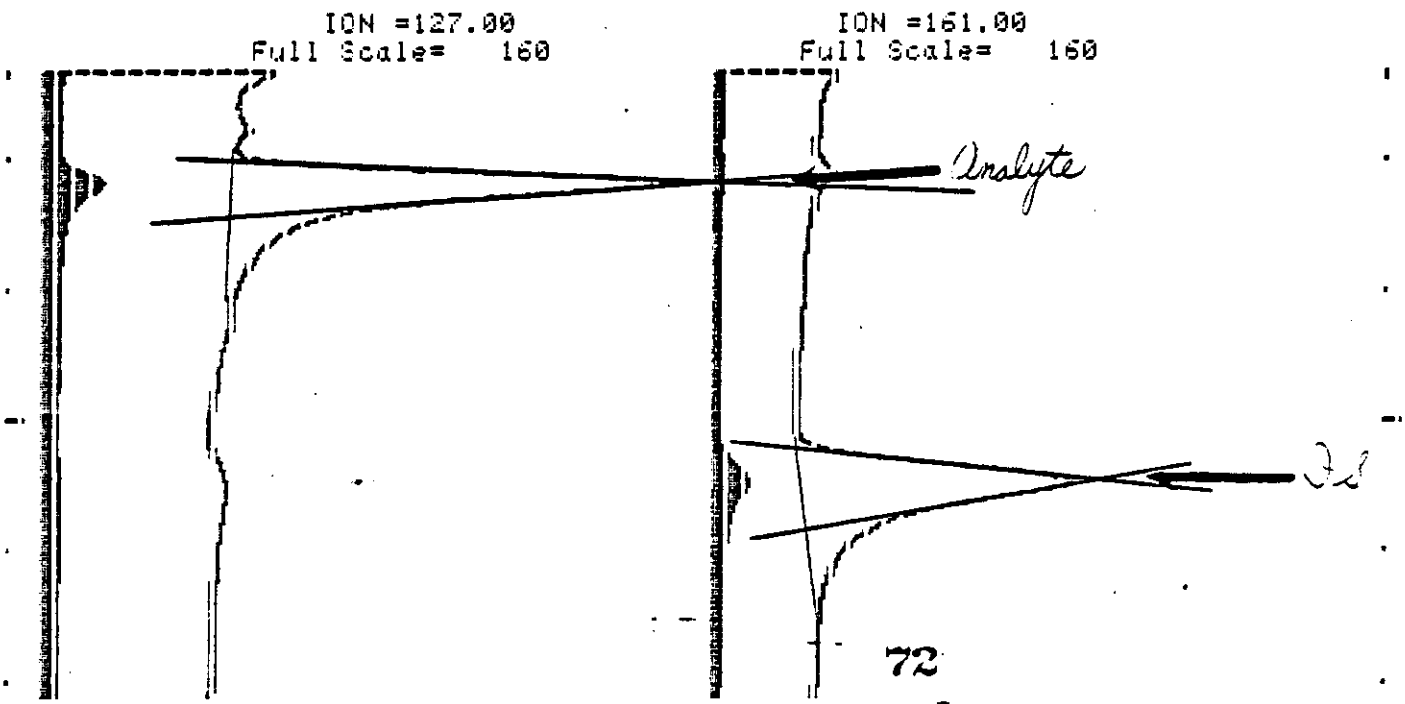

80265

Sample & No. _____ NBR L-196-26
1.5gm Chicken Liver Control

Dates: Extraction 7-29-81 Injection 8-5-81

Response (Area mm²/Ratio) : Sample/Std.

	Analyte ÷ IS	Ratio
Sample	7.5x70 ÷ 2(26.2) 12.0x91.0 ÷ 2(486.0)	0.05
0.1ppm Std	8.0x70.0 ÷ 2(280.0) 12.0x43.5 ÷ 2(261.0)	1.07

CONFIDENTIAL
PROPERTY OF
MOBAY CHEMICAL CORPORATION
AGRICULTURAL CHEMICALS DIVISION

*** SAMPLE IDENTITY # 1.00 dated 8/ 5/1981 Wednesday

ION MASSES	127.00	161.00
DWELL TIMES (msec)	400.00	400.00
MAXIMUM ABUNDANCE	71.23	132.91

RUN 2 TOTAL RUN TIME = 7.2 AMOUNT INJECTED = 6.00

ION =127.00
Full Scale= 133

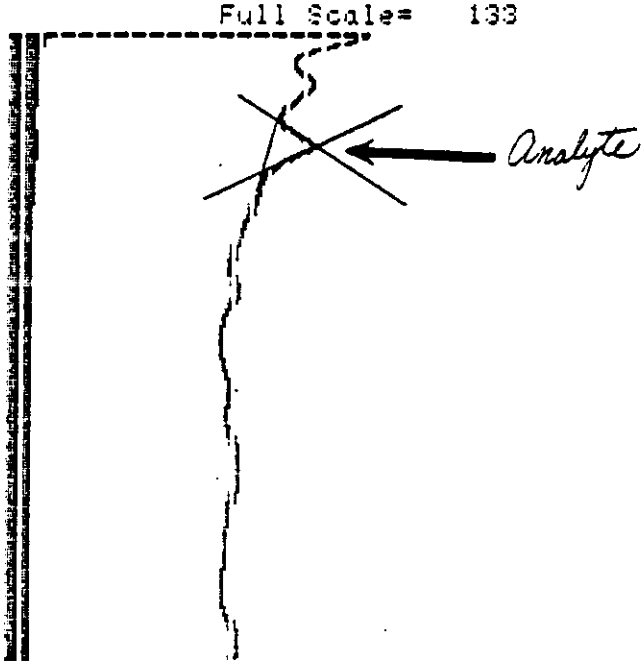

ION =161.00
Full Scale= 133

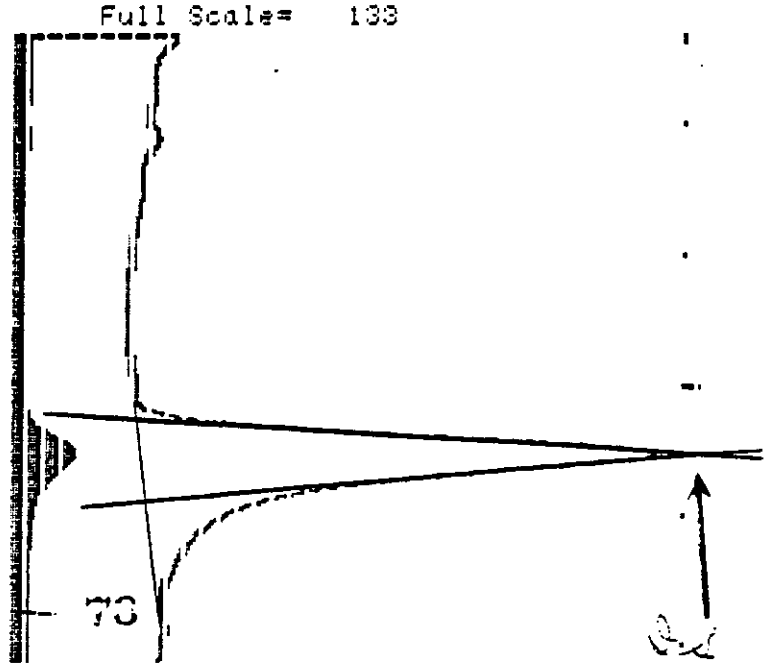

80265

Sample & No. _____ NBR 1-196-26

15 gm Chicken Liver Control fortified with 0.1ppm Bayleton

Dates: Extraction 7-29-81 Injection 8-6-81

Area mm

Response (Ratio): Sample/Std.

	Analyte	÷ IS	Ratio
Sample	6.5 x 35.0 ÷ 2 (276.2)	12.0 x 35.5 ÷ 2 (213.0)	1.30
0.1ppm Std	9.0 x 72.0 ÷ 2 (324.0)	11.5 x 52.0 ÷ 2 (299.0)	1.08

CONFIDENTIAL

PROPERTY OF

MOBAY CHEMICAL CORPORATION
AGRICULTURAL CHEMICALS DIVISION

*** SAMPLE IDENTITY # 2.00 dated 8/ 6/1981 Thursday

ION MASSES	127.00	161.00
DWELL TIMES (msec)	400.00	400.00
MAXIMUM ABUNDANCE	664.65	238.30

RUN 2 TOTAL RUN TIME = 7.2 AMOUNT INJECTED = 6.00

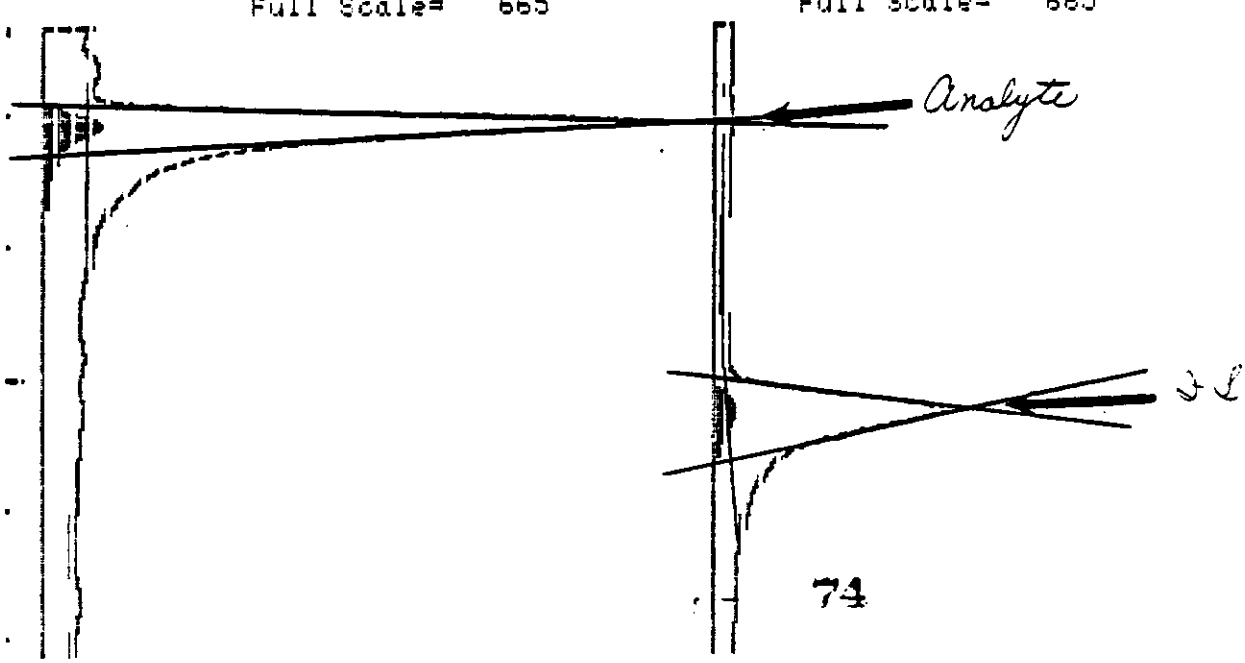

80265

Sample & No. _____ NBR 1-191-26

15gm Chicken Liver Control fortified with 0.05ppm Dryfoton

Dates: Extraction 7-29-81 Injection 8-5-81

Response (Ratio): Sample/Std.

	Analyte	÷ IS	Ratio
Sample	6.5x66.5÷2(216.1)	12.0x52.0÷2(312.0)	0.69
0.1ppm Std	8.0x74.0÷2(296.0)	11.0x53.0÷2(291.5)	1.02

CONFIDENTIAL

PROPERTY OF

MOBAY CHEMICAL CORPORATION
AGRICULTURAL CHEMICALS DIVISION

*** SAMPLE IDENTITY # 3.00 dated 8/ 5/1981 Wednesday

ION MASSES	127.00	161.00
DWELL TIMES (msec)	400.00	400.00
MAXIMUM ABUNDANCE	302.64	190.05

RUN 2 TOTAL RUN TIME = 7.2 AMOUNT INJECTED = 6.00

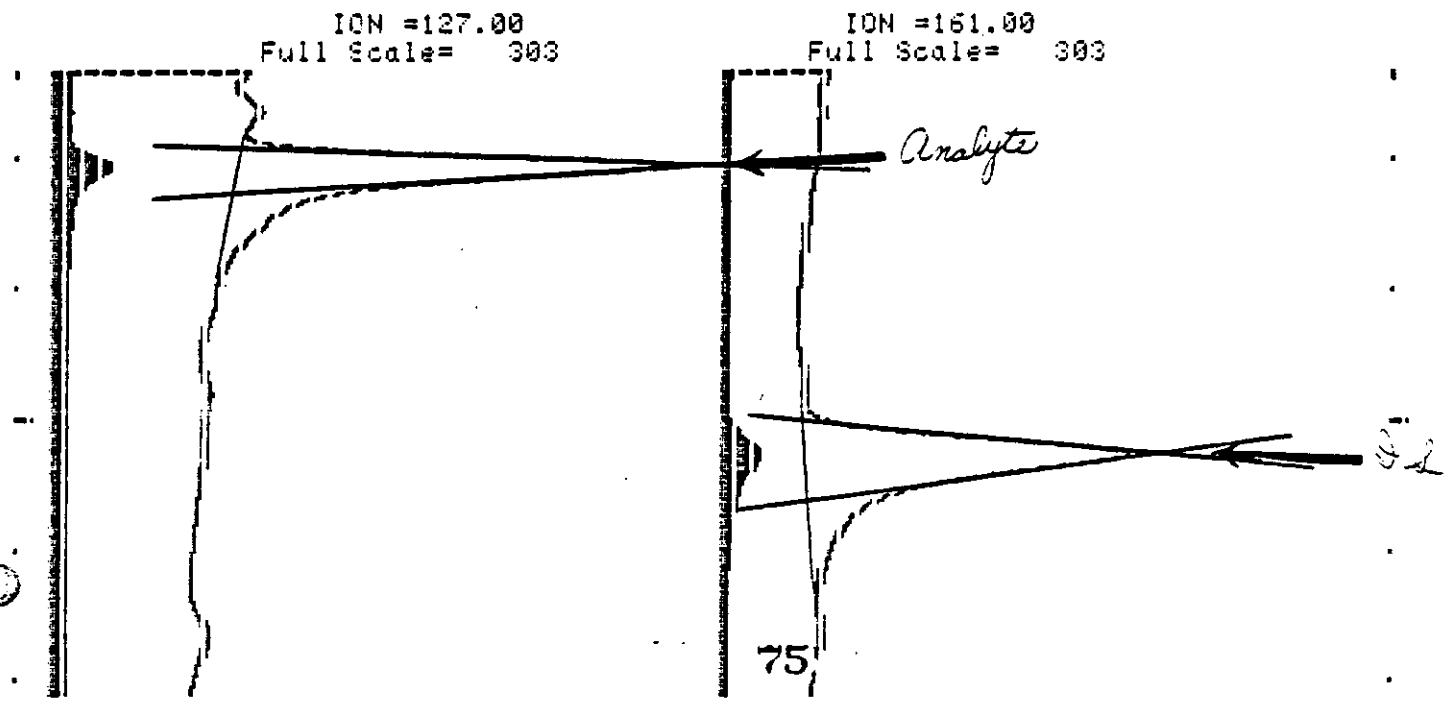

80265

Sample & No. _____ NBR 1-196-26

15gm Chidan Liner Control, fortified with 0.1ppm KWH0519

Dates: Extraction 7-29-81 Injection 8-5-81

Area mm²

Response (Ratio): Sample/Std.

	Analyte	÷ IS	Ratio
Sample	7.0 x 78.0 ÷ 2 (273.0)	12.0 x 44.0 ÷ 2 (246.0)	1.11
0.1ppm Std	8.0 x 75.0 ÷ 2 (300.0)	11.5 x 52.0 ÷ 2 (299.0)	1.00

CONFIDENTIAL

PROPERTY OF

MOBAY CHEMICAL CORPORATION
AGRICULTURAL CHEMICALS DIVISION

*** SAMPLE IDENTITY # 4.00 dated 8/ 5/1981 Wednesday

ION MASSES	127.00	161.00
DWELL TIMES (msec)	400.00	400.00
MAXIMUM ABUNDANCE	571.21	261.97

RUN 3 TOTAL RUN TIME = 7.2 AMOUNT INJECTED = 6.00

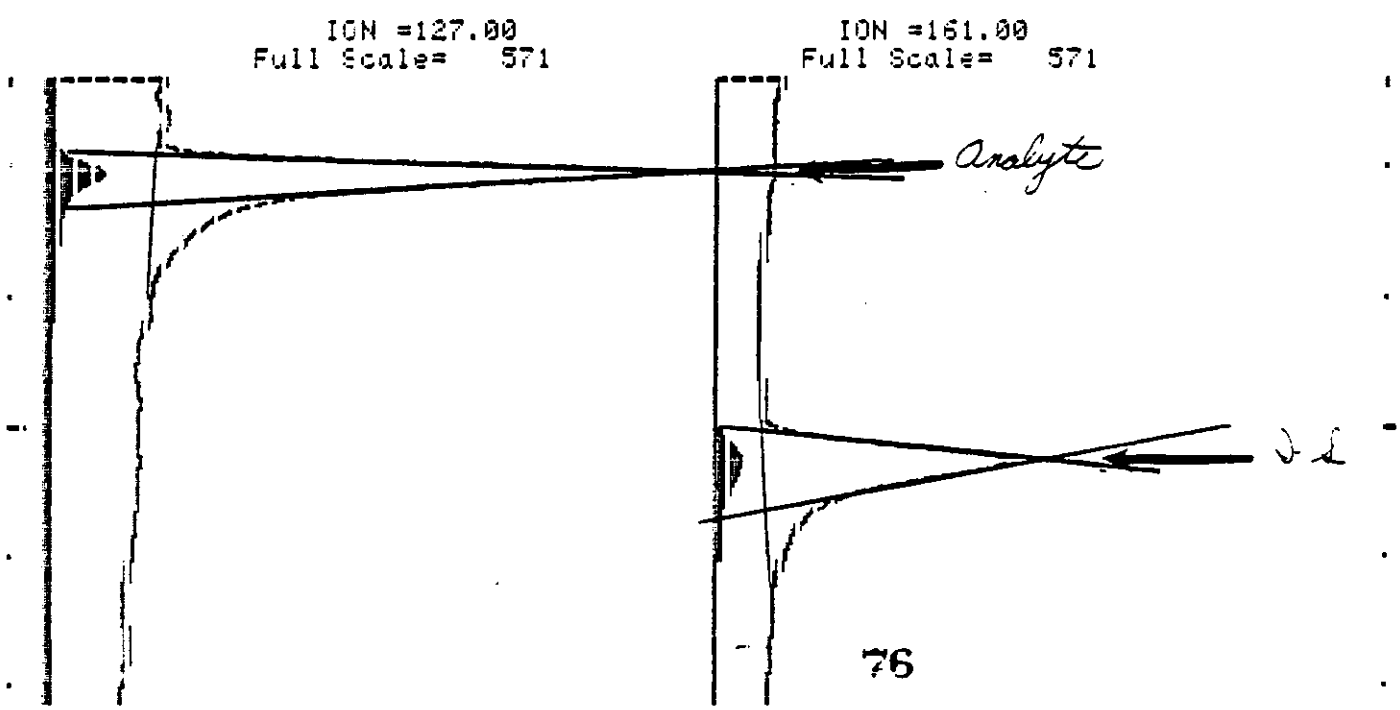

80265

Sample & No. _____ NBR 1-196-26
15gm Chicken Liver Control fortified
with 0.05 ppm KWH 0519

Dates: Extraction 7-29-81 Injection 8-5-81

Area mm²

Response (Ratio): Sample/Std.

	Analyte	÷	VS	Ratio
Sample	7.0 x 60.0 ÷ 2 (210.0)	12.0 x 60.0 ÷ 2 (360.0)		0.58
0.1 ppm std	8.0 x 75.0 ÷ 2 (300.0)	11.5 x 52.0 ÷ 2 (299.0)		1.00

CONFIDENTIAL
PROPERTY OF
MOBAY CHEMICAL CORPORATION
AGRICULTURAL CHEMICALS DIVISION

** SAMPLE IDENTITY # 5.00 dated 8/ 5/1981 Wednesday

ION MASSES	127.00	161.00
DWELL TIMES (msec)	400.00	400.00
MAXIMUM ABUNDANCE	228.26	175.58

RUN 5 TOTAL RUN TIME = 7.2 AMOUNT INJECTED = 6.00

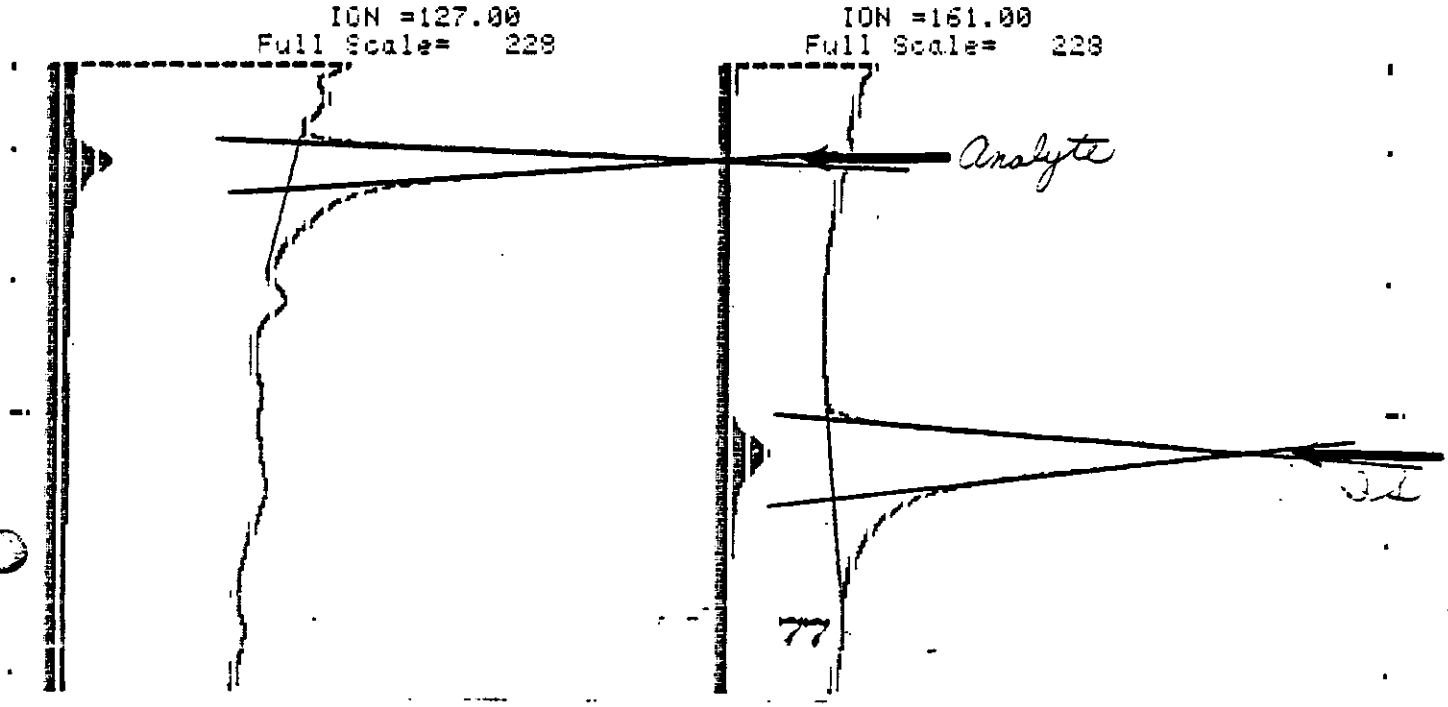

80265

Sample & No. _____ NBR 1-196-26

15gm Chicken Liver Control fortified with 0.1 ppm KWH 1640

Dates: Extraction 7-29-81 Injection 8-6-81

Response (Area mm² Ratio): Sample/Std.

	Analyte ÷ IS	Ratio
Sample	7.5 x 78.0 ÷ 2(292.5) 12.0 x 48.5 ÷ 2(2910)	1.01
0.1 ppm Std	8.5 x 80.0 ÷ 2(3400) 10.5 x 61.0 ÷ 2(320.2)	1.06

CONFIDENTIAL

PROPERTY OF

MOBAY CHEMICAL CORPORATION
AGRICULTURAL CHEMICALS DIVISION

*** SAMPLE IDENTITY # 6.00 dated 8/ 6/1981 Thursday

ION MASSES	127.00	161.00
DWELL TIMES (msec)	400.00	400.00
MAXIMUM ABUNDANCE	164.16	89.57

RUN 7 TOTAL RUN TIME = 7.2 AMOUNT INJECTED = 6.00

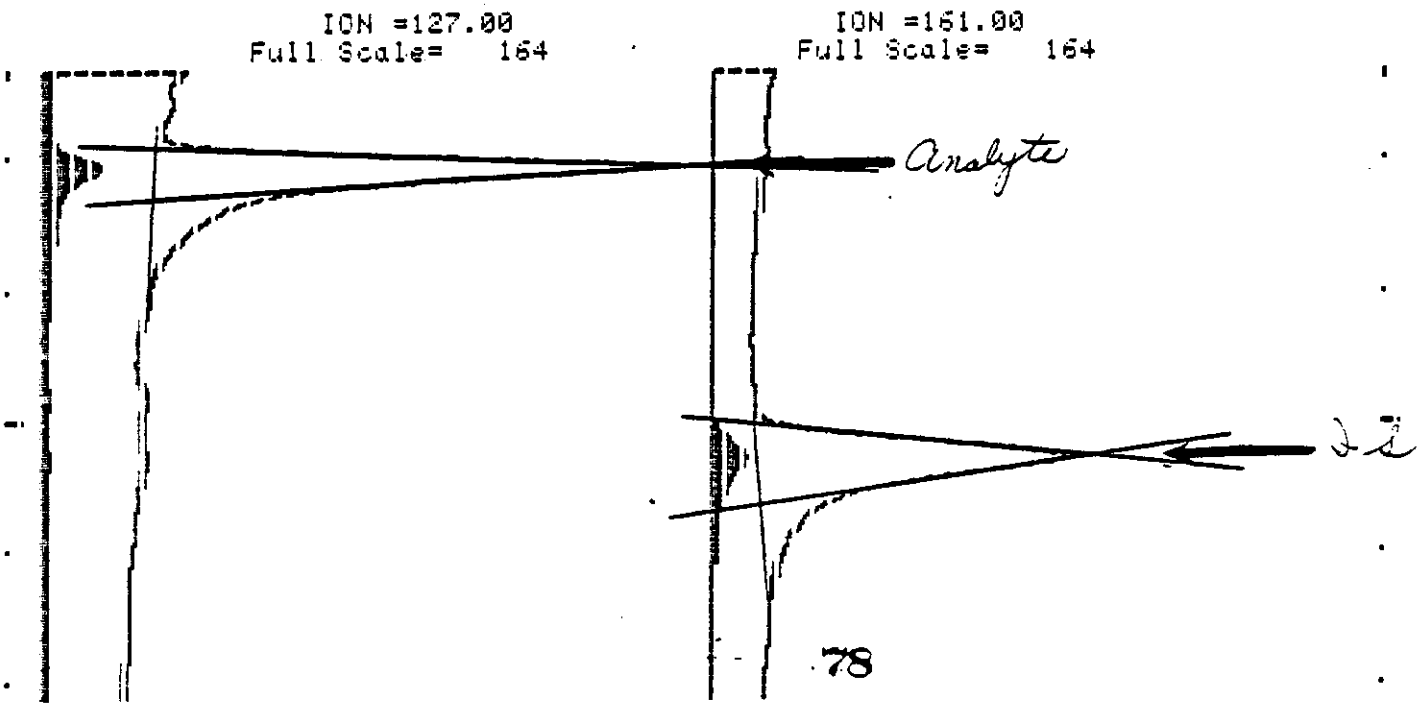

80265

Sample & No. _____ NBR 1-196-26
15gm Chicken Liver Control fortified
with 0.05ppm VWH 1640

Dates: Extraction 7-29-81 Injection 8-6-81

Response (Ratio): Sample/Std.

	Analyte	÷ IS	Ratio
Sample	8.0x53.5 ÷ 2(214.0)	11.5x89.0 ÷ 2(511.8)	0.42
0.01ppm Std	7.5x84.0 ÷ 2(315.0)	11.5x60.0 ÷ 2(345.0)	0.91

CONFIDENTIAL
PROPERTY OF
MOBAY CHEMICAL CORPORATION
AGRICULTURAL CHEMICALS DIVISION

*** SAMPLE IDENTITY # 7.00 dated 8/ 6/1981 Thursday

ION MASSES	127.00	161.00
DWELL TIMES (msec)	400.00	400.00
MAXIMUM ABUNDANCE	70.45	88.21

RUN 8 TOTAL RUN TIME = 7.2 AMOUNT INJECTED = 6.00

ION =127.00
Full Scale= 88

ION =161.00
Full Scale= 88

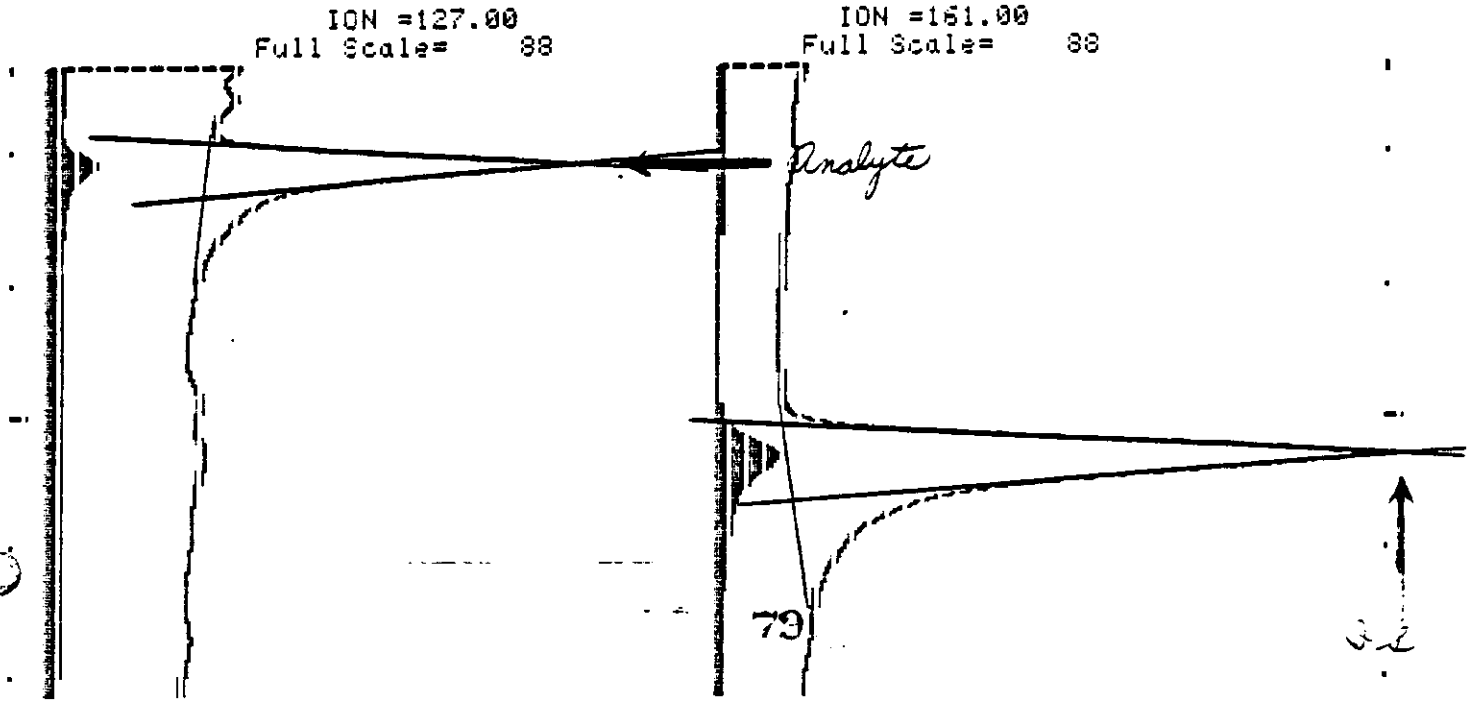

80265

Sample & No. _____ NBR 1-196-26
15 gm Chicken Liver Control fortified
with 0.1ppm KWH 1323

Dates: Extraction 7-29-81 Injection 8-6-81

Response (Area mm²): Sample/Std.

	Analyte	÷ IS	Ratio
Sample	6.5x87.0 ÷ 2 (263.2)	12.0x40.5 ÷ 2 (343.0)	1.08
0.1ppm Std	7.5x84.0 ÷ 2 (315.0)	11.5x60.0 ÷ 2 (345.0)	0.91

CONFIDENTIAL
PROPERTY OF
MOBAY CHEMICAL CORPORATION
AGRICULTURAL CHEMICALS DIVISION

*** SAMPLE IDENTITY # 8.00 dated 8/ 6/1981 Thursday

ION MASSES	127.00	161.00
DWELL TIMES (msec)	400.00	400.00
MAXIMUM ABUNDANCE	230.15	99.89

RUN10 TOTAL RUN TIME = 7.2 AMOUNT INJECTED = 6.00

ION =127.00
Full Scale= 230

ION =161.00
Full Scale= 230

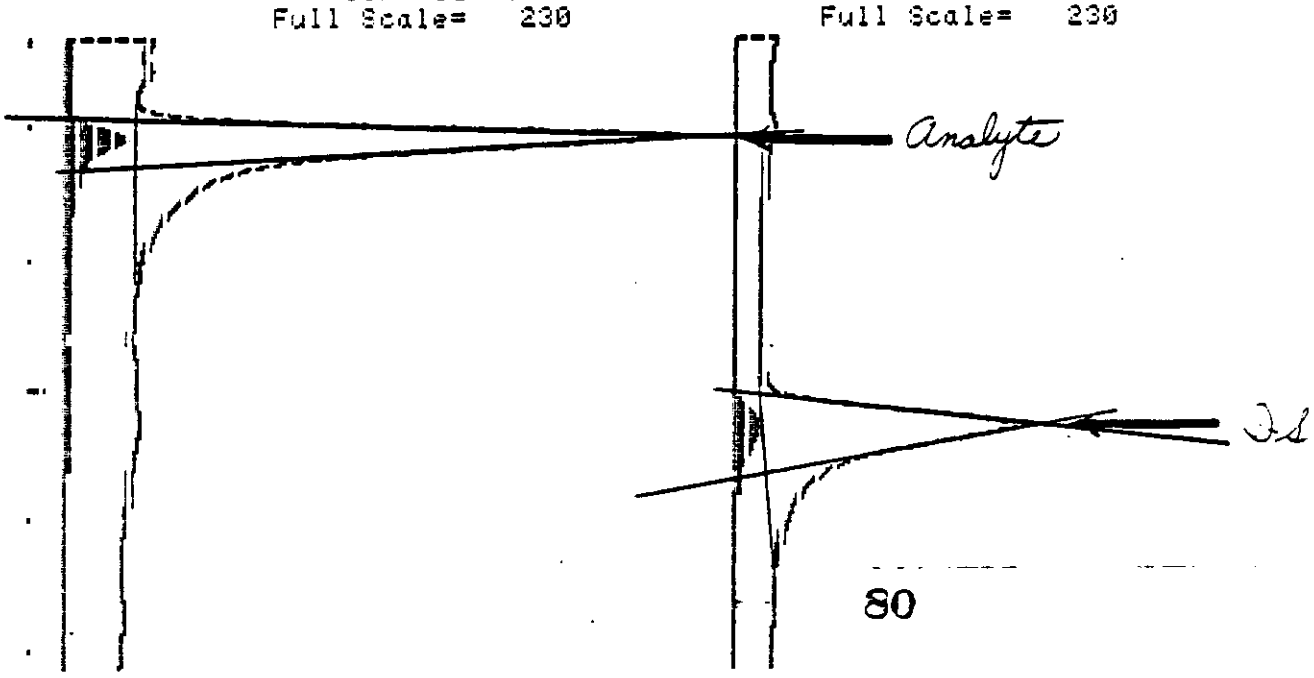

80265

Sample & No. _____ NBR 1-196-26
15 gm Chicken Liver Control fortified
with 0.05 ppm KWH 1323

Dates: Extraction 7-29-81 Injection 8-6-81
Area mm²
Response (Ratio): Sample/Std.

	Analyte	÷ IS	Ratio
Sample	7.5x70.0÷2(262.5)	12.5x67.5÷2(421.9)	0.62
0.1ppm Std	8.5x83.0÷2(352.8)	11.5x57.5÷2(330.6)	1.07

CONFIDENTIAL
PROPERTY OF
MOBAY CHEMICAL CORPORATION
AGRICULTURAL CHEMICALS DIVISION

*** SAMPLE IDENTITY # 9.00 dated 8/ 6/1981 Thursday

ION MASSES	127.00	161.00
DWELL TIMES (msec)	400.00	400.00
MAXIMUM ABUNDANCE	104.18	80.63

RUN11 TOTAL RUN TIME = 7.2 AMOUNT INJECTED = 6.00

ION =127.00
Full Scale= 104

ION =161.00
Full Scale= 104

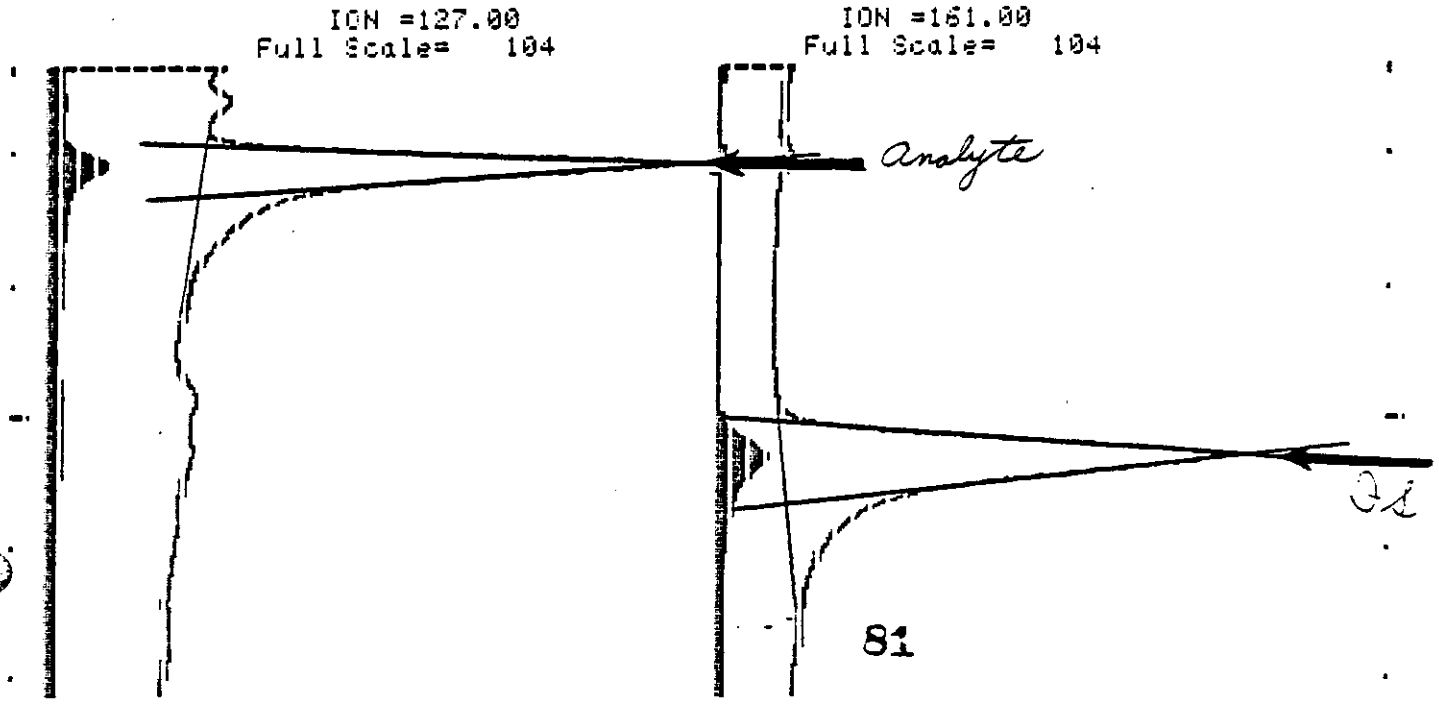

80265

Sample & No. ___ NBR 1-196-26
15gm Chicken Liver Control fortified
with 0.1ppm KWG 1342

Dates: Extraction 7-29-81 Injection 8-6-81
Area mm²
Response (Ratio): Sample/Std.

	Analyte ÷ IS		Ratio
Sample	7.0 x 83.0 ÷ 2(290.5)	13.0 x 33.0 ÷ 2(214.5)	1.14
0.1ppm Std	8.5 x 69.0 ÷ 2(293.2)	11.5 x 45.5 ÷ 2(261.6)	1.12

CONFIDENTIAL
PROPERTY OF
MOBAY CHEMICAL CORPORATION
AGRICULTURAL CHEMICALS DIVISION

*** SAMPLE IDENTITY # 10.00 dated 8/ 6/1981 Thursday

ION MASSES	127.00	161.00
DWELL TIMES (msec)	400.00	400.00
MAXIMUM ABUNDANCE	359.32	129.78

RUN19 TOTAL RUN TIME = 7.2 AMOUNT INJECTED = 6.00

ION =127.00
Full Scale= 359

ION =161.00
Full Scale= 359

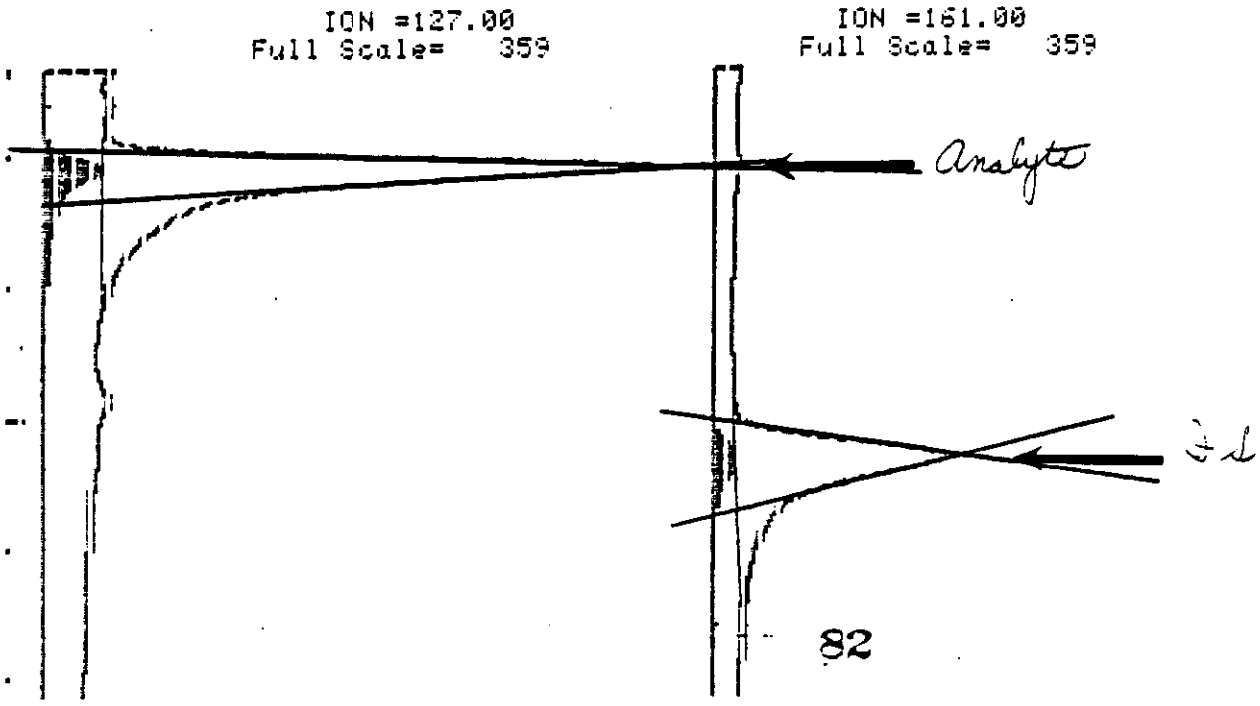

80265

Sample & No. _____ NBR 1-1910-26

15gm Liver Chicken Control fortified with 0.05ppm X-US 1342

Dates: Extraction 7-29-81 Injection 8-6-81

Response (Ratio): Sample/Std.

	Analyte	÷ IS	Ratio
Sample	7.5x73.0 ÷ 2 (273.8)	12.5x74.5 ÷ 2 (465.6)	0.59
0.1ppm Std	8.0x86.0 ÷ 2 (344.0)	10.5x61.0 ÷ 2 (320.2)	1.07

CONFIDENTIAL

PROPERTY OF

MOBAY CHEMICAL CORPORATION
AGRICULTURAL CHEMICALS DIVISION

*** SAMPLE IDENTITY # 11.00 dated 8/ 6/1981 Thursday

ION MASSES	127.00	161.00
DWELL TIMES (msec)	400.00	400.00
MAXIMUM ABUNDANCE	110.94	92.03

RUN14 TOTAL RUN TIME = 7.2 AMOUNT INJECTED = 6.00

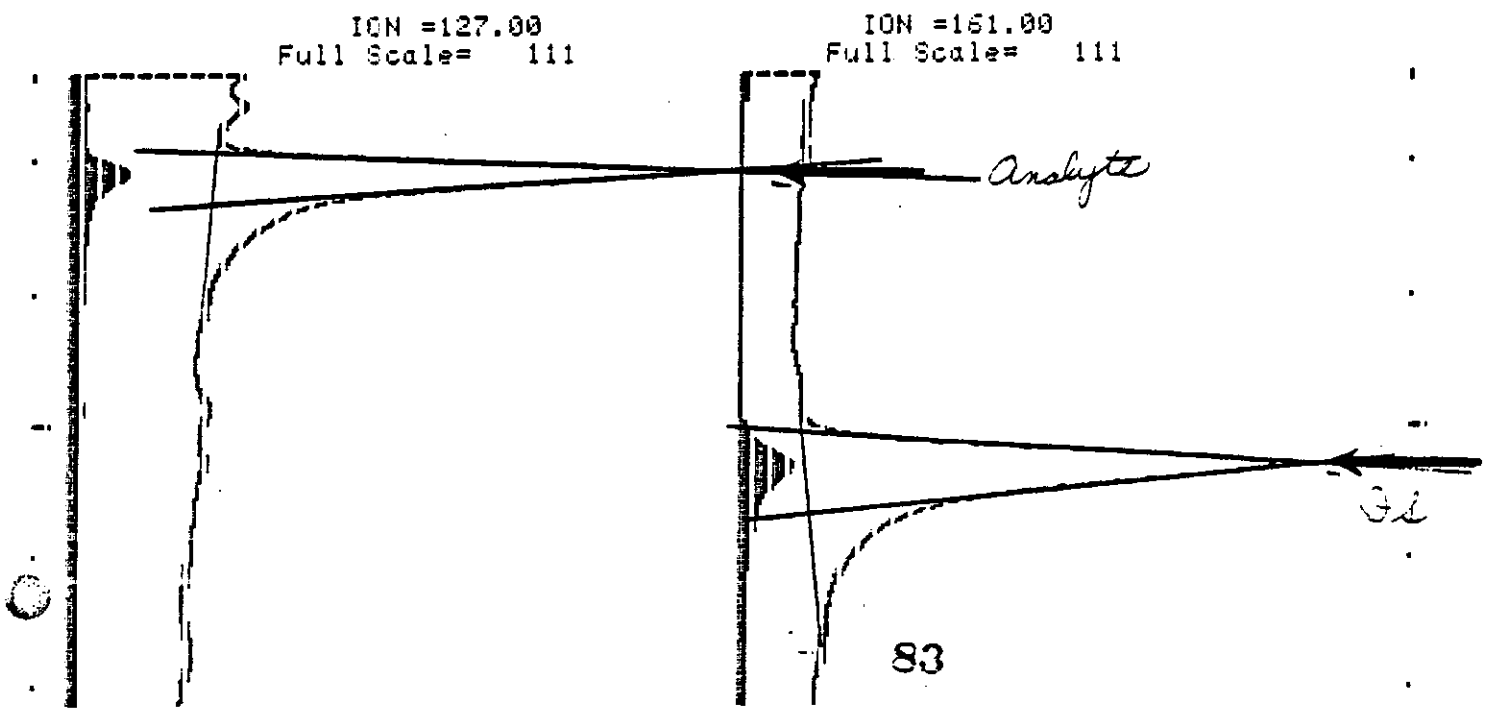

80265

(Typical Std used for Guyard Samples)

Sample & No. _____ NBR 1-196-57

0.1ppm Std - hydrolyzed + deoxidized

Bayleton

Dates: Extraction 10-6-81 Injection 10-19-81

Response (Area mm² / Ratio): Sample/Std.

	Analyte	I.S	Ratio
Sample			
0.1ppm Std	10.5 × 71.0 ± a (372.8)	16.5 × 55.5 ± a (457.9)	0.81

CONFIDENTIAL
PROPERTY OF
MOBAY CHEMICAL CORPORATION
AGRICULTURAL CHEMICALS DIVISION

*** SAMPLE IDENTITY # 12.00 dated 10/19/1981 Monday

ION MASSES	127.00	161.00
DWELL TIMES (msec)	50.00	550.00
MAXIMUM ABUNDANCE	242.32	162.20

RUN 4 TOTAL RUN TIME = 6.9 AMOUNT INJECTED = 10.00

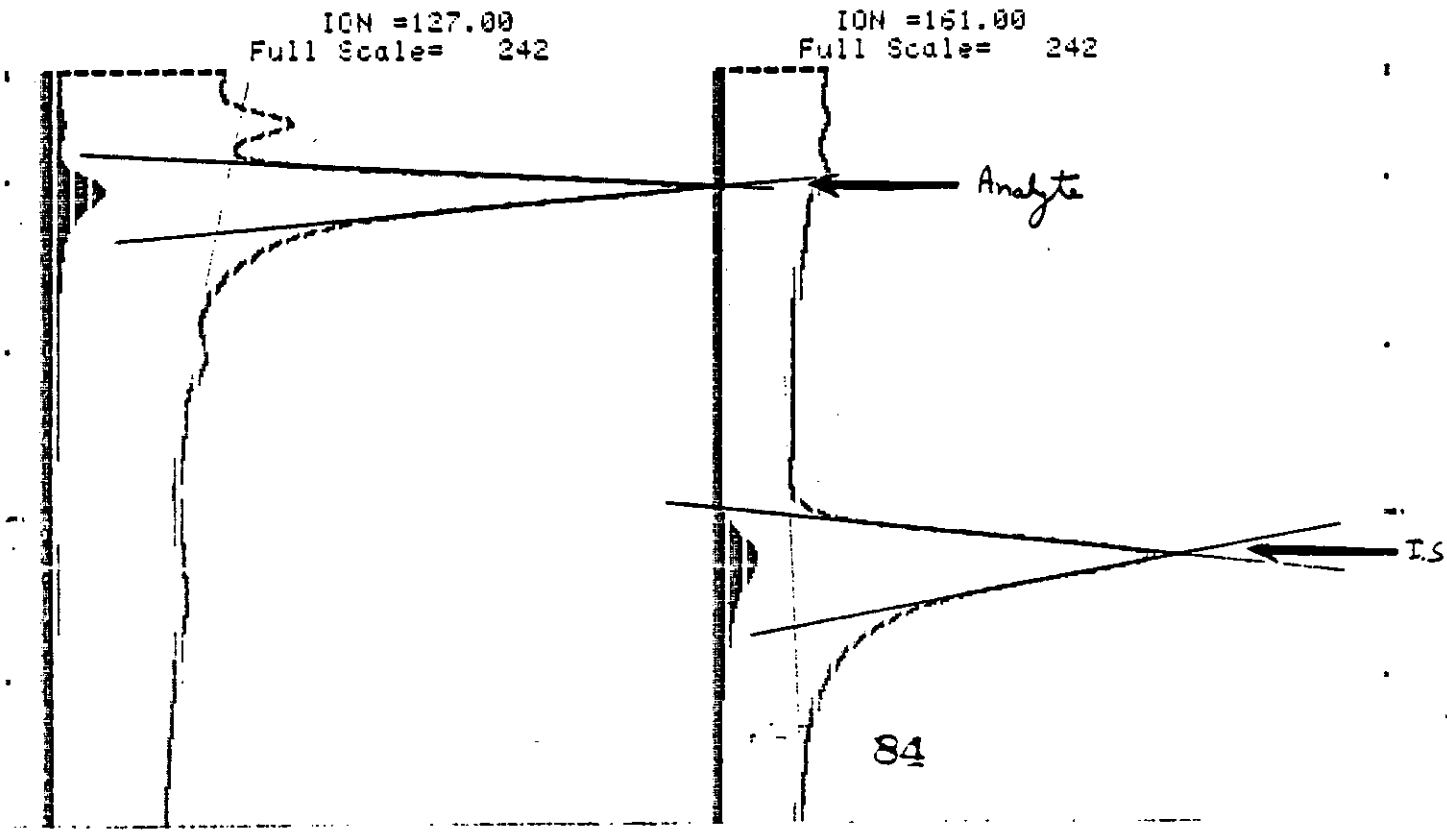

80265

Sample & No. _____ NBR 1-196-57

10gm Control Chicken Gizzard

Dates: [illegible] on 10-6-81 Injection 10-19-81

Response (Area mm² Ratio): Sample/Std.

	Analyte	I.S.	Ratio
Sample	7.0×2.5÷2 (8.8)	16.0×99.0÷2 (7120)	0.01
0.1ppm Std	10.5×64.5÷2 (338.6)	16.5×51.5÷2 (424.9)	0.80

CONFIDENTIAL
PROPERTY OF
MOBAY CHEMICAL CORPORATION
AGRICULTURAL CHEMICALS DIVISION

*** SAMPLE IDENTITY # 1.00 dated 10/19/1981 Monday

ION MASSES	127.00	161.00
DWELL TIMES (msec)	50.00	550.00
MAXIMUM ABUNDANCE	86.92	410.97

RUN 2 TOTAL RUN TIME = 6.9 AMOUNT INJECTED = 10.00

ION =127.00
Full Scale= 411

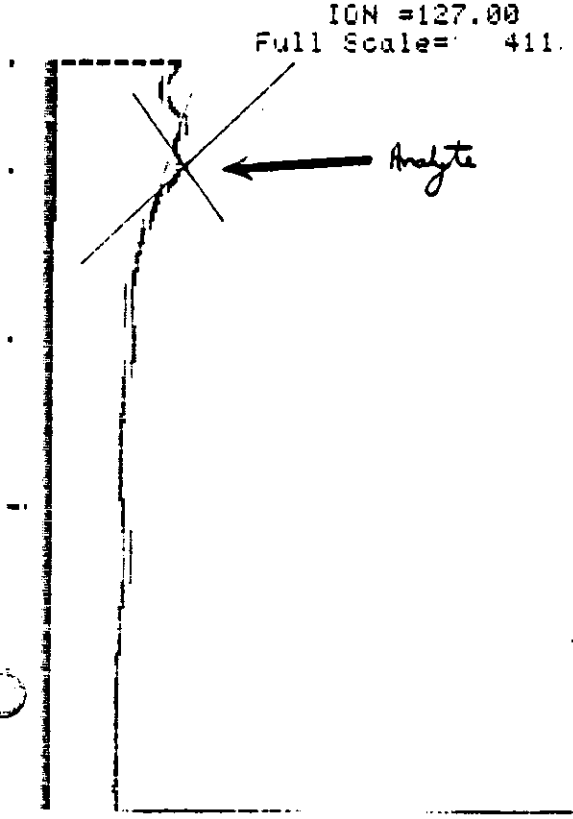

ION =161.00
Full Scale= 411

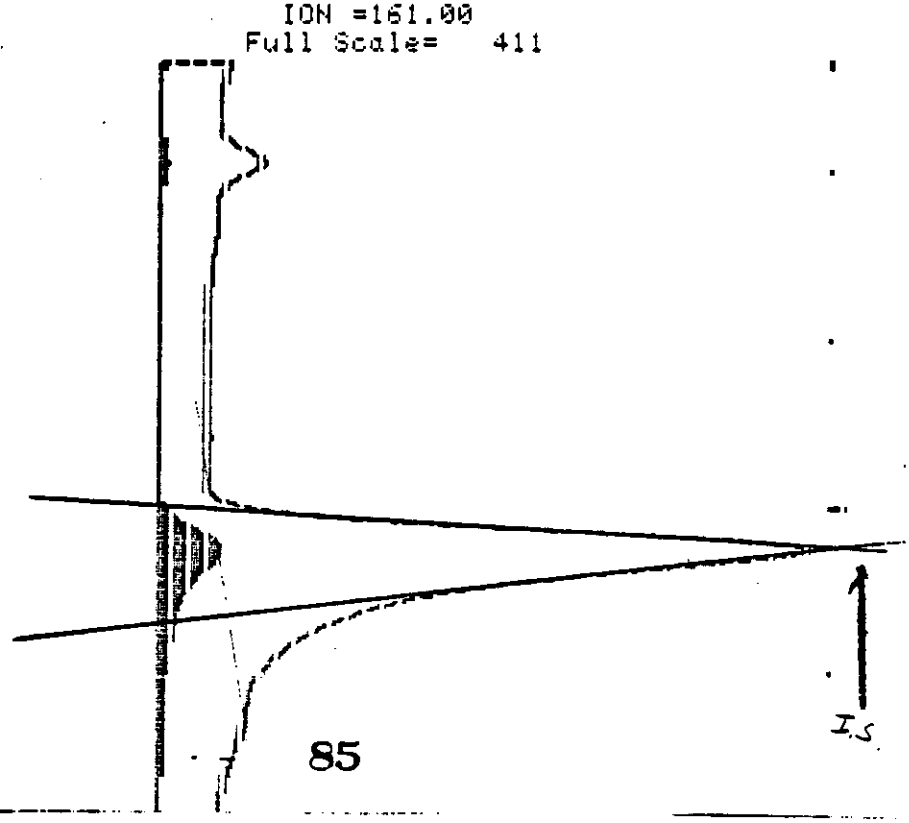

80265

Sample & No. _____ NBR 1796-57

10gm Control Chicken Gizzard Fortified with

0.1ppm Baylebon

Dates: [illegible] 10-6-81 Injection 10-19-81

Response: Area mm² Ratio : Sample/Std.

	Analyte	I.S	Ratio
Sample	11.0 × 82.0 ÷ 2 (451.0)	16.0 × 63.0 ÷ 2 (504.0)	0.89
0.1ppm Std	10.5 × 71.0 ÷ 2 (372.8)	16.5 × 55.5 ÷ 2 (457.9)	0.81

CONFIDENTIAL

PROPERTY OF

MOBAY CHEMICAL CORPORATION
AGRICULTURAL CHEMICALS DIVISION

*** SAMPLE IDENTITY # 2.00 dated 10/19/1981 Monday

ION MASSES	127.00	161.00
DWELL TIMES (msec)	50.00	550.00
MAXIMUM ABUNDANCE	425.55	294.19

RUN 3 TOTAL RUN TIME = 6.9 AMOUNT INJECTED = 10.00

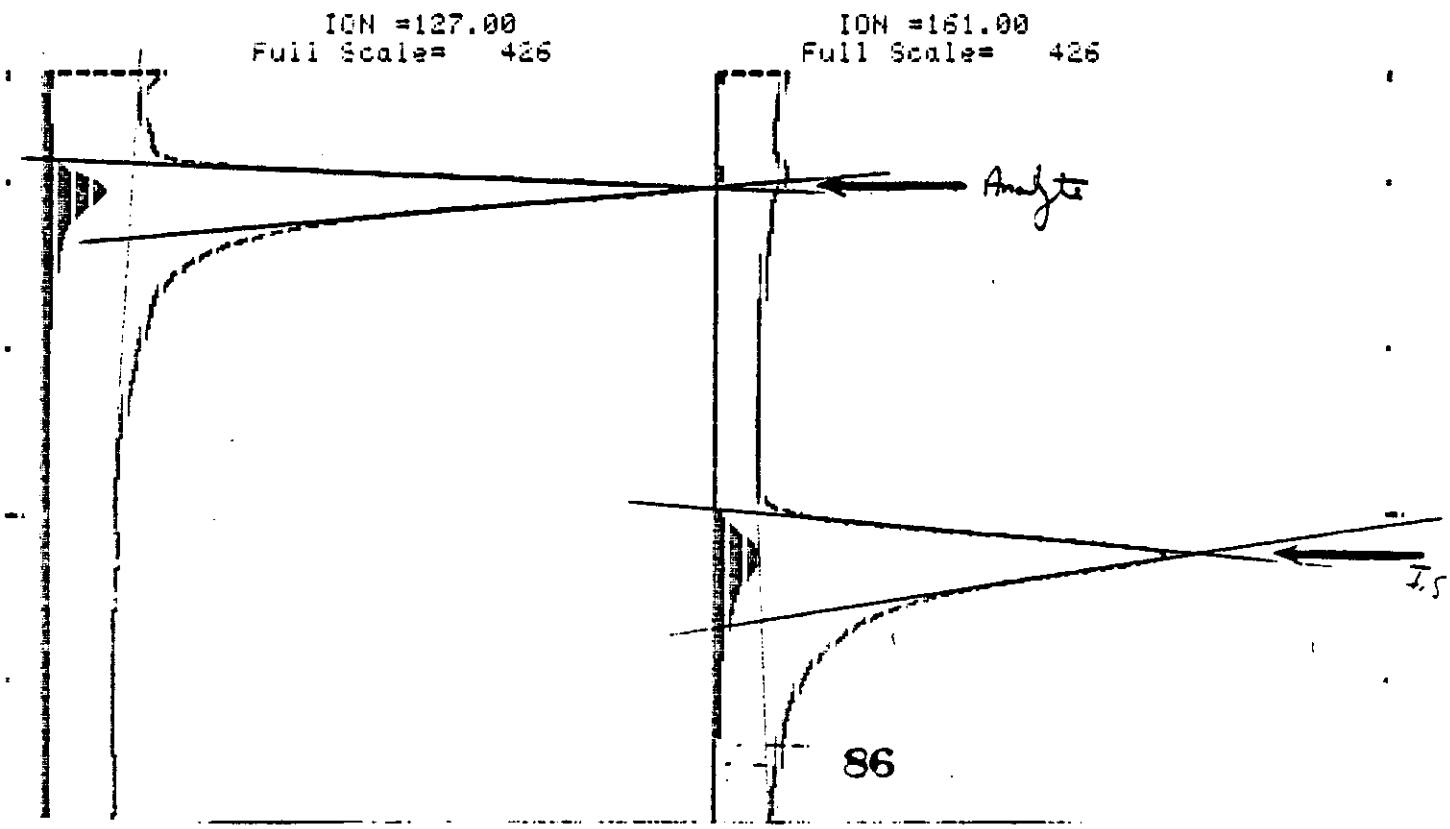

80265

Sample & No. _____ NBR 1-196-57

10ppm Control Chicken Gizzard Fortified with 0.05ppm Baytex

Dates: Extraction 10-6-81 Injection 10-19-81

Response Area mm² Ratio : Sample/Std.

	Analyte	÷	I.S	Ratio
Sample	10.0×54.5 ½ (257.5)		15.5×94.0 ½ (728.5)	0.35
0.1ppm Std	10.5×71.0 ½ (372.8)		8.5×55.5 ½ (457.9)	0.81

CONFIDENTIAL
PROPERTY OF
MOBAY CHEMICAL CORPORATION
AGRICULTURAL CHEMICALS DIVISION

*** SAMPLE IDENTITY # 3.00 dated 10/19/1981 Monday

ION MASSES	127.00	161.00
DWELL TIMES (msec)	50.00	550.00
MAXIMUM ABUNDANCE	518.07	780.83

RUN 5 TOTAL RUN TIME = 6.9 AMOUNT INJECTED = 10.00

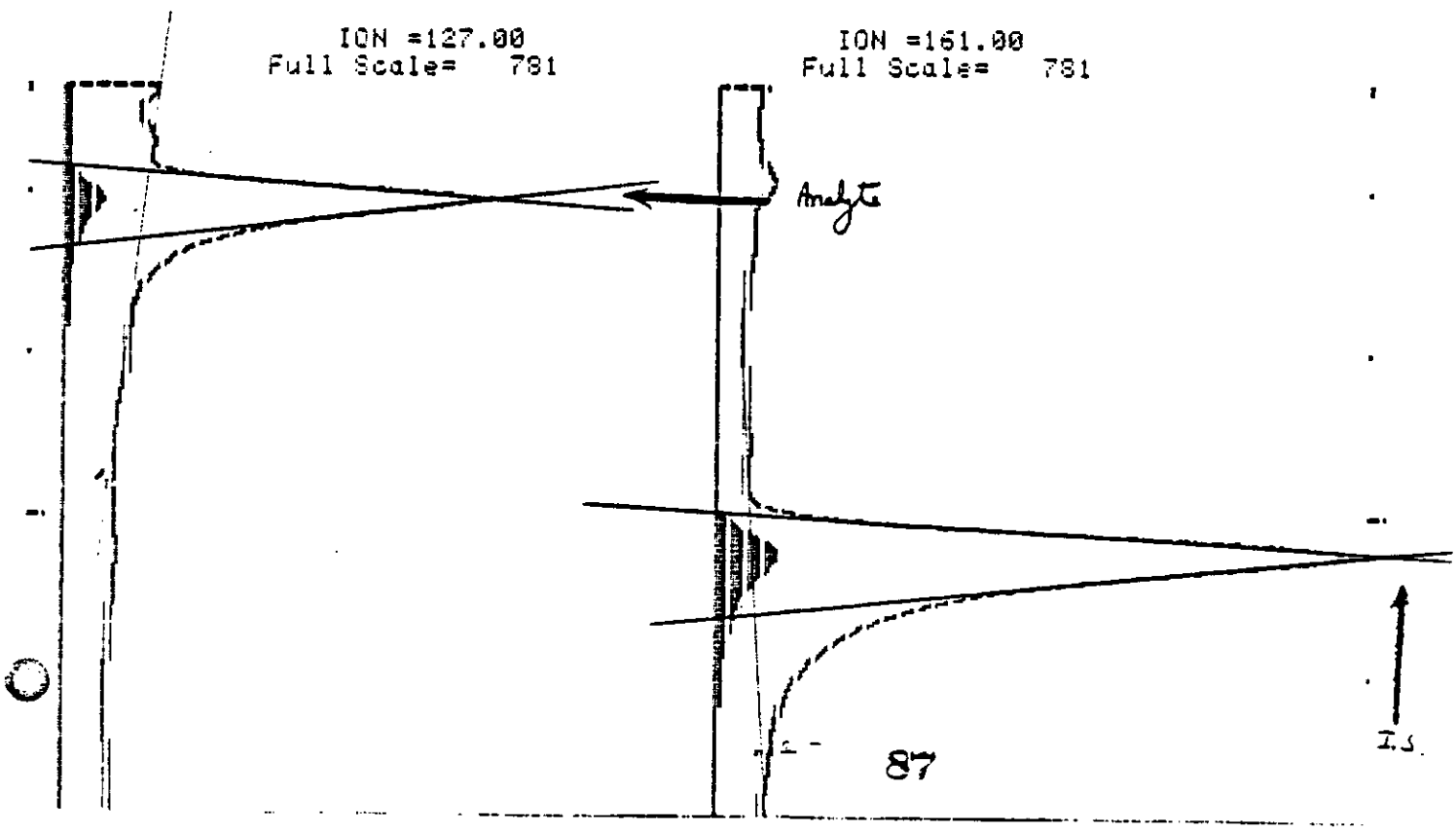

80265

Sample & No. _____ NBR 1-196-57

10 gm Control Chicken Gizzard Fortified with Oil ppm KWG 0519

Dates: [illegible] 10-6-81 Injection 10-20-81

Response: Area mm² Ratio : Sample/Std.

	Analyte	IS	Ratio
Sample	11.0 × 84.0 ÷ 2 (462.0)	16.0 × 62.5 ÷ 2 (500.0)	0.92
Oil ppm Std	11.0 × 72.0 ÷ 2 (396.0)	16.0 × 55.5 ÷ 2 (444.0)	0.89

CONFIDENTIAL
PROPERTY OF
MOBAY CHEMICAL CORPORATION
AGRICULTURAL CHEMICALS DIVISION

*** SAMPLE IDENTITY # 4.00 dated 10/20/1981 Tuesday

ION MASSES	127.00	161.00
DWELL TIMES (msec)	50.00	550.00
MAXIMUM ABUNDANCE	527.60	361.75

RUN 7 TOTAL RUN TIME = 6.9 AMOUNT INJECTED = 10.00

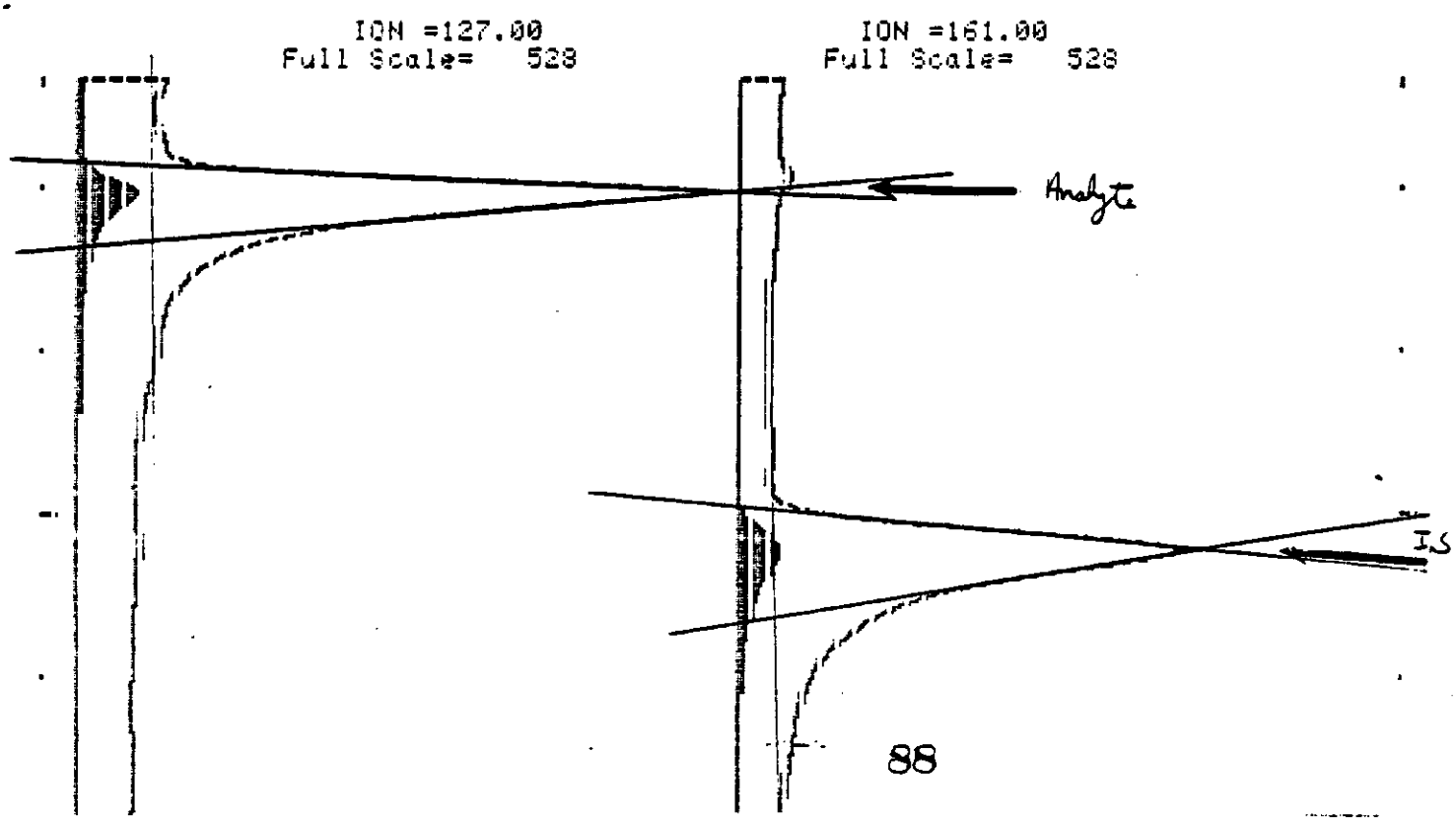

80265

Sample & No. _____ NBR 1-196-57

10gm Control Chicken Gizzard Fortified with 0.05ppm BWG 0519

Dates: Extraction 10-6-81 Injection 10-20-81

Response (Area mm²) Ratio: Sample/Std.

	Analyte	I.S.	Ratio
Sample	10.5 × 63.0 ÷ 2 (330.8)	16.0 × 91.0 ÷ 2 (728.0)	0.45
0.1ppm Std	10.5 × 76.0 ÷ 2 (399.0)	15.5 × 61.5 ÷ 2 (476.6)	0.84

CONFIDENTIAL

PROPERTY OF

MOBAY CHEMICAL CORPORATION
AGRICULTURAL CHEMICALS DIVISION

*** SAMPLE IDENTITY # 5.00 dated 10/20/1981 Tuesday

ION MASSES	127.00	161.00
DWELL TIMES (msec)	50.00	550.00
MAXIMUM ABUNDANCE	361.63	452.43

RUN 8 TOTAL RUN TIME = 6.9 AMOUNT INJECTED = 10.00

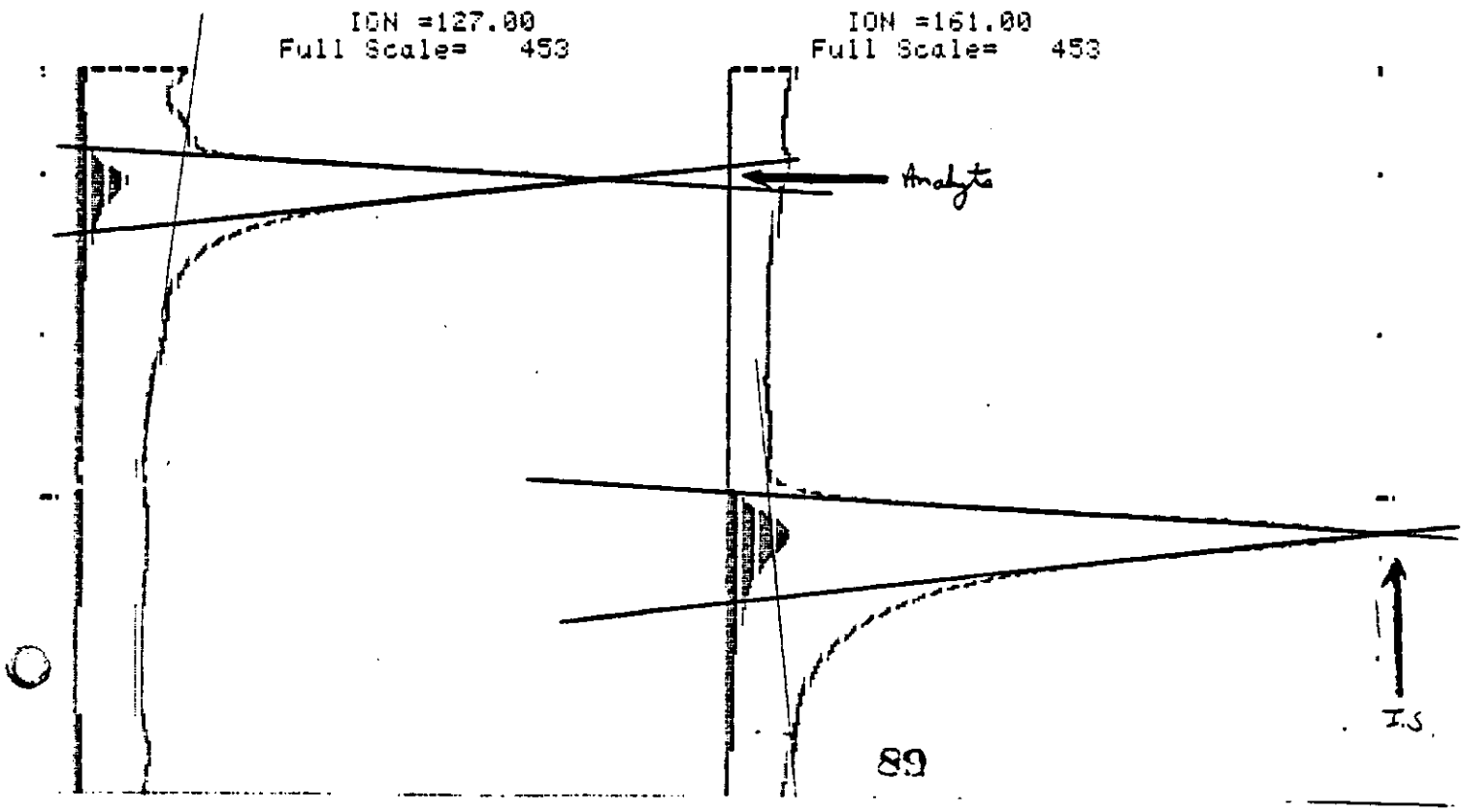

80265

Sample & No. _____ NBR 1-196-57

10 gm Control Chicken Gizzard Sandwich with 0.1 ppm Kwg 1640

Dates: [illegible] 10-6-81 Injection 10-20-81

[illegible] Area mm² Ratio: Sample/Std.

	Analyte	I.S	Ratio
Sample	165 × 77.0 ÷ 2 (4427.5)	15.5 × 71.0 ÷ 2 (785.2)	0.63
0.1 ppm Std	10.0 × 76.0 ÷ 2 (3800.0)	17.0 × 66.0 ÷ 2 (559.5)	0.73

CONFIDENTIAL

PROPERTY OF

MOBAY CHEMICAL CORPORATION
AGRICULTURAL CHEMICALS DIVISION

*** SAMPLE IDENTITY # 8.00 dated 10/20/1981 Tuesday

ION MASSES	127.00	161.00
DWELL TIMES (msec)	50.00	550.00
MAXIMUM ABUNDANCE	281.63	296.35

RUN 3 TOTAL RUN TIME = 6.9 AMOUNT INJECTED = 10.00

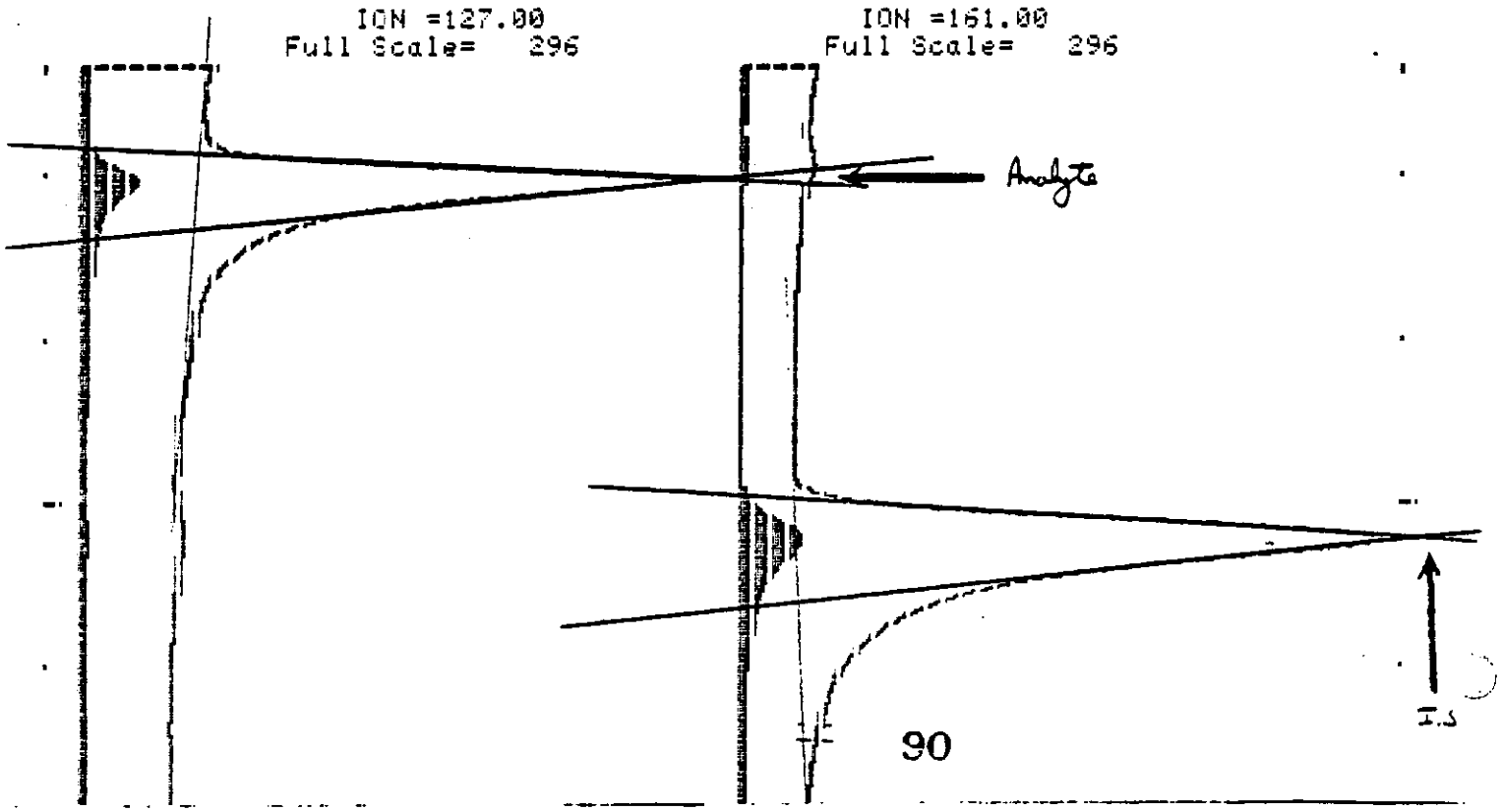

80265

Sample & No. _____ NBR 1-196-57

10gm Control Chicken Gizzards Fortified

with 0.05ppm KWG 1640

Dates: [illegible] 10-6-81 [illegible] 10-20-81

[illegible] Ratio : Sample/Std.

	Analyte	÷	IS	Ratio
Sample	10.5×44.5÷2 (233.6)		16.5×85.0÷2 (701.2)	0.33
0.1ppm Std	10.0×76.0÷2 (380.0)		17.0×61.0÷2 (518.5)	0.73

CONFIDENTIAL

PROPERTY OF

MOBAY CHEMICAL CORPORATION
AGRICULTURAL CHEMICALS DIVISION

SAMPLE IDENTITY # 9.00 dated 10/20/1981 Tuesday

ION MASSES	127.00	161.00
DWELL TIMES (msec)	50.00	550.00
MAXIMUM ABUNDANCE	160.43	206.75

RUN 5 TOTAL RUN TIME = 6.9 AMOUNT INJECTED = 10.00

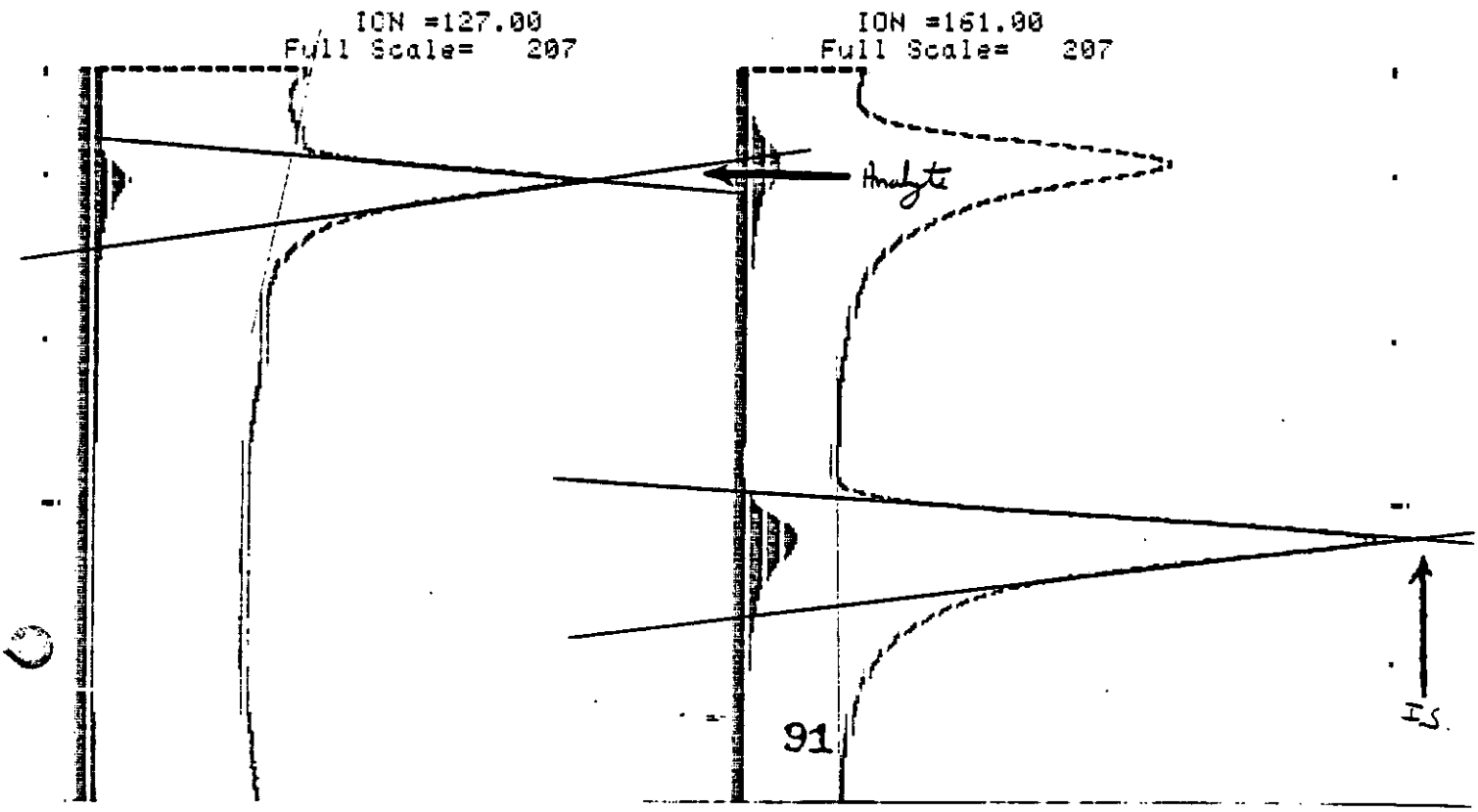

80265

Sample & No. _____ NBR 1-196-57

10 gm Control Chicken Eggs and Scrubbed

With 0.1 ppm KWG 1323

Dates: Extraction 10-6-81 Injection 10-21-81

Response Area mm² Ratio Sample/Std.

	Analyte	I.S	Ratio
Sample	11.5 × 60.0 ÷ 2 (345.0)	16.5 × 45.0 ÷ 2 (371.2)	0.93
0.1 ppm Std	10.5 × 69.0 ÷ 2 (362.2)	15.5 × 45.5 ÷ 2 (352.6)	1.03

CONFIDENTIAL
PROPERTY OF
MOBAY CHEMICAL CORPORATION
AGRICULTURAL CHEMICALS DIVISION

*** SAMPLE IDENTITY # 10.00 dated 10/21/1981 Wednesday

ION MASSES	127.00	161.00
DWELL TIMES (msec)	50.00	550.00
MAXIMUM ABUNDANCE	268.88	165.15

RUN 9 TOTAL RUN TIME = 6.9 AMOUNT INJECTED = 10.00

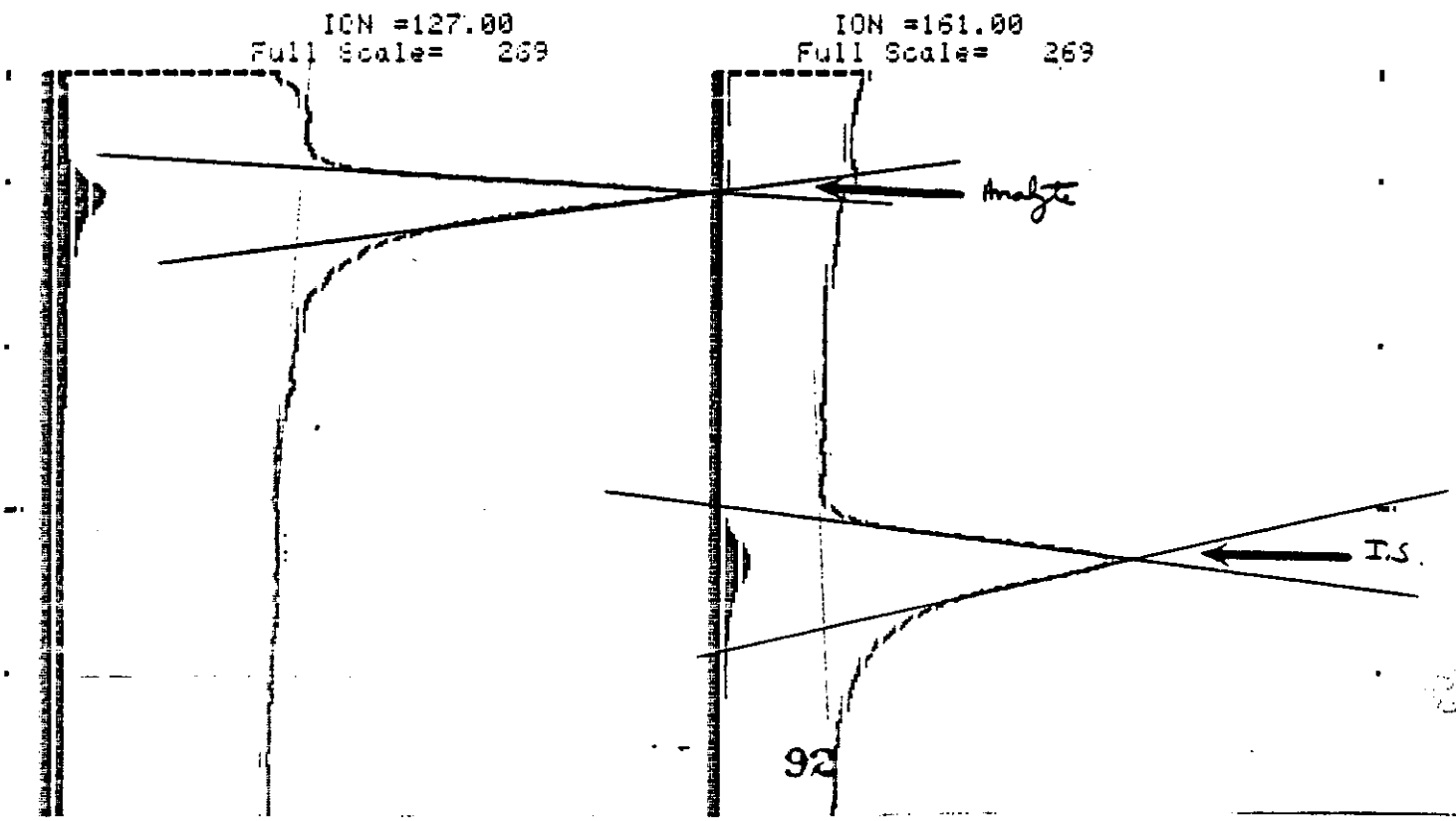

80265

Sample & [illegible] NBR 1796-57

10gm Control Chicken Gizzard Fortified

with 0.05ppm Kiwi 1323

Dates: Ex[illegible] 10-6-81 [illegible] 10-21-81

Response: Area mm² Ratio [illegible] Sample/Std.

	Analyte	I.S	Ratio
Sample	9.5 × 74.0 ÷ 2 (351.5)	16.5 × 89.0 ÷ 2 (734.2)	0.48
0.1ppm Std	10.5 × 69.0 ÷ 2 (362.2)	15.5 × 45.5 ÷ 2 (352.6)	1.09

CONFIDENTIAL

PROPERTY OF

MOBAY CHEMICAL CORPORATION
AGRICULTURAL CHEMICALS DIVISION

*** SAMPLE IDENTITY # 11.00 dated 10/21/1981 Wednesday

ION MASSES	127.00	161.00
DWELL TIMES (msec)	50.00	550.00
MAXIMUM ABUNDANCE	584.84	581.64

RUN11 TOTAL RUN TIME = 6.9 AMOUNT INJECTED = 10.00

ION =127.00
Full Scale= 585

ION =161.00
Full Scale= 585

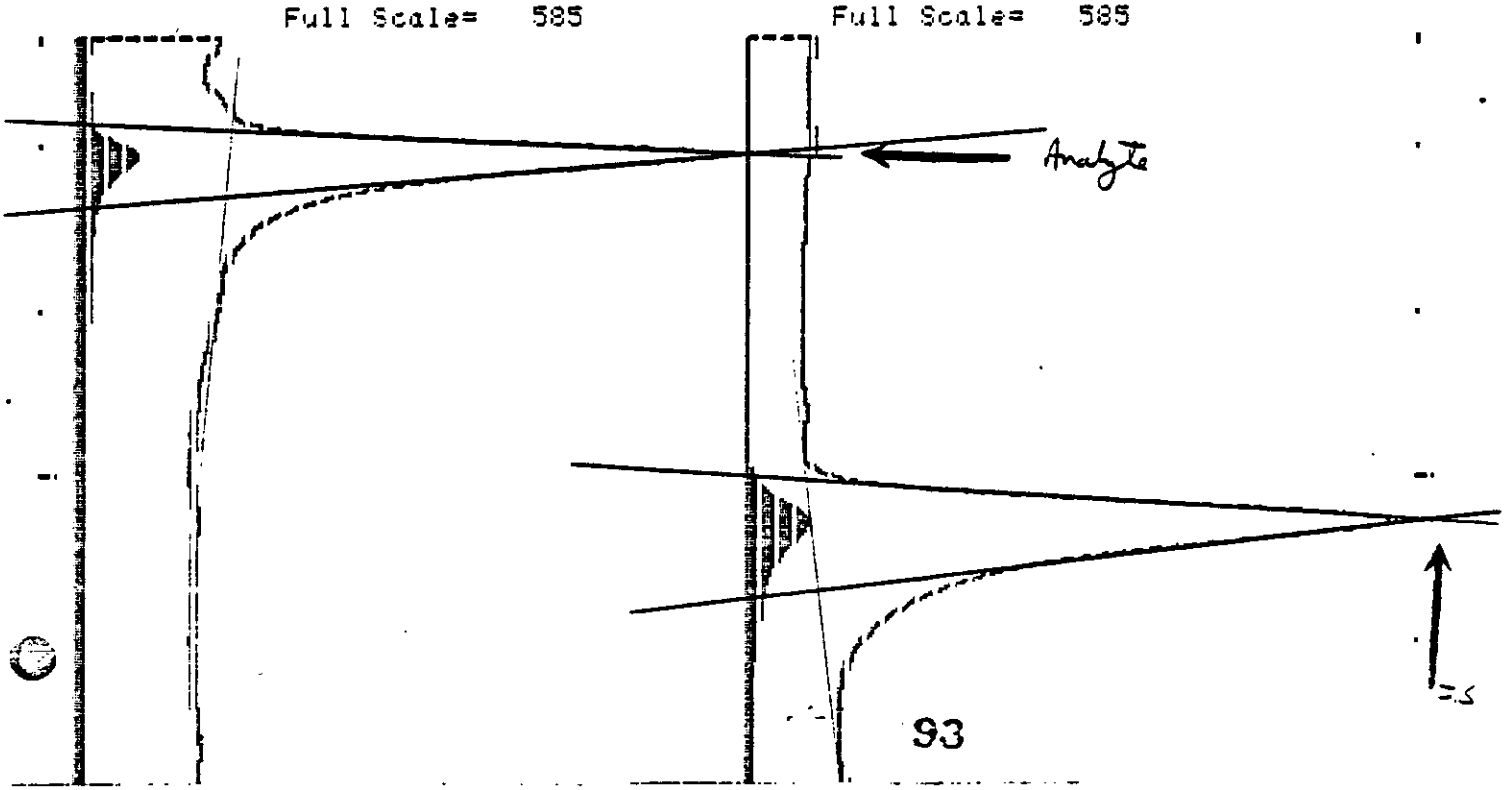

80265

Sample & No. _____ NBR 1-196-57

10g Chicken Control Gizzard Fortified

with 0.1 ppm KWG 1342

Dates: [illegible] 10-6-81 Injection 10-20-81

Response: Area [illegible] Ratio : Sample/Std.

	Analyte	÷ I.S.	Ratio
Sample	11.0 × 74.0 ÷ 2 (407.0)	16.5 × 83.0 ÷ 2 (684.9)	0.59
0.1 ppm Std	9.0 × 71.0 ÷ 2 (319.5)	16.5 × 55.0 ÷ 2 (452.8)	0.70

CONFIDENTIAL
PROPERTY OF
MOBAY CHEMICAL CORPORATION
AGRICULTURAL CHEMICALS DIVISION

*** SAMPLE IDENTITY # 6.00 dated 10/20/1981 Tuesday

ION MASSES	127.00	161.00
DWELL TIMES (msec)	50.00	550.00
MAXIMUM ABUNDANCE	230.46	217.59

RUN 2 TOTAL RUN TIME = 6.9 AMOUNT INJECTED = 10.00

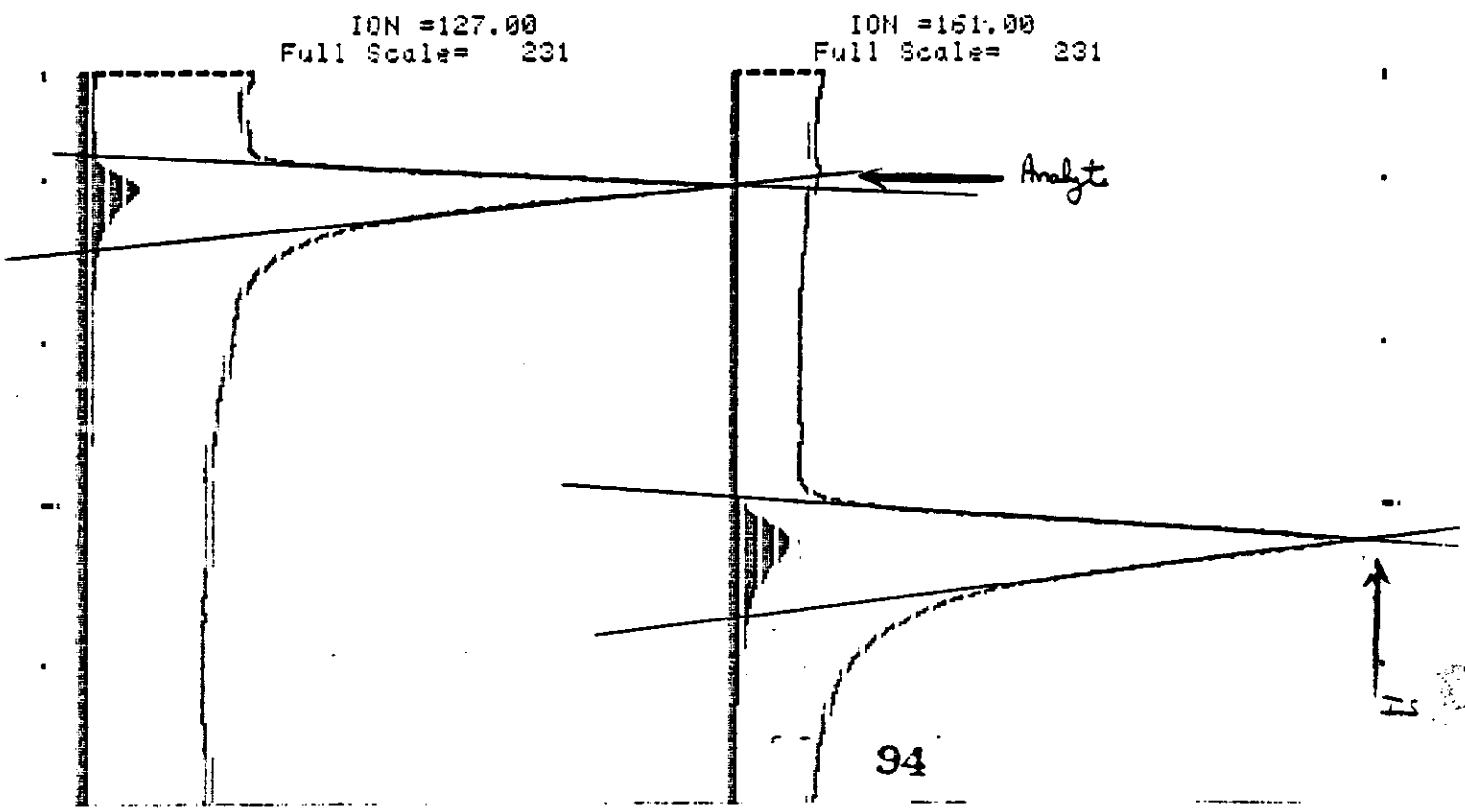

80265

Sample & No. _____ NBR 1-196-57

10gm Control Chicken Gizzard Fortified with 0.05ppm KWG 1342

Dates: Extraction 10-6-81 Injection 10-20-81

Response Area mm² Ratio : Sample/Std.

	Analyte	I.S.	Ratio
Sample	11.5×40.0÷2 (230.0)	15.0×88.5÷2 (663.8)	0.35
0.1ppm Sed	9.0×71.0÷2 (319.5)	16.5×55.0÷2 (453.8)	0.70

CONFIDENTIAL

PROPERTY OF

MOBAY CHEMICAL CORPORATION
AGRICULTURAL CHEMICALS DIVISION

SAMPLE IDENTITY # 7.00 dated 10/20/1981 Tuesday

ION MASSES	127.00	161.00
DWELL TIMES (msec)	50.00	550.00
MAXIMUM ABUNDANCE	151.79	220.53

RUN11 TOTAL RUN TIME = 6.9 AMOUNT INJECTED = 10.00

ION =127.00
Full Scale= 221

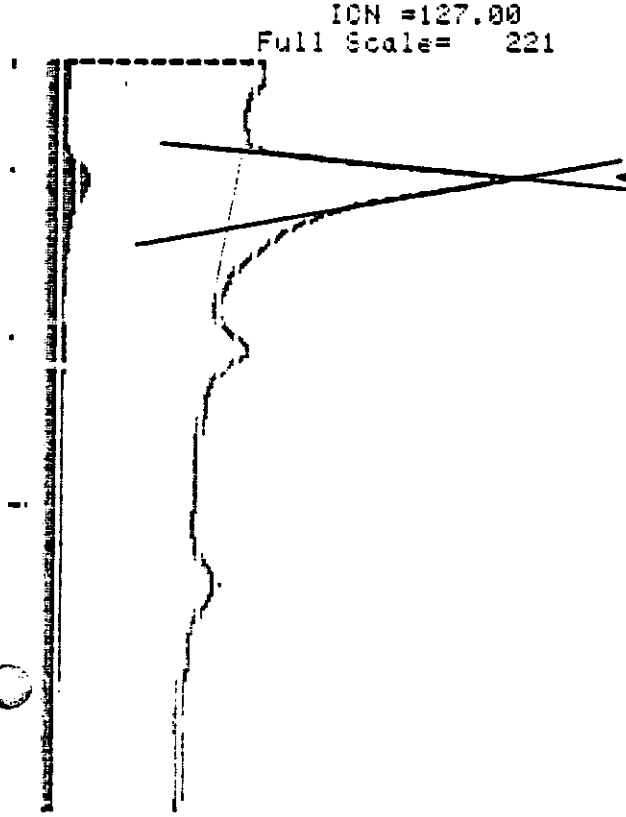

ION =161.00
Full Scale= 221

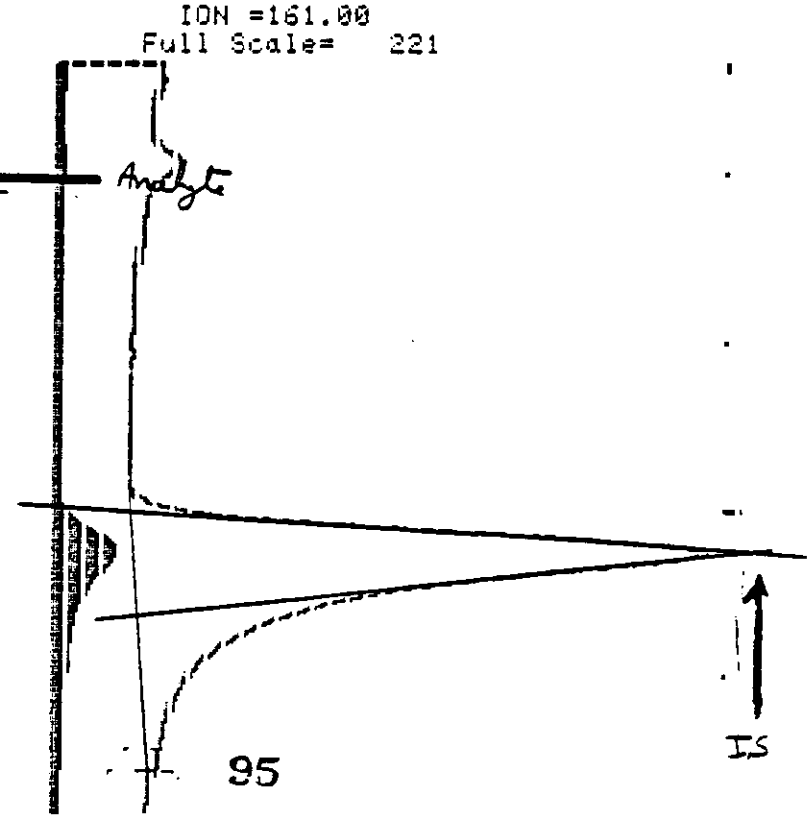

80265

Sample & No. _____ NBR 1-196-57

Reagent Blank

Dates: Extraction 10-6-81 Injection 10-20-81

Response (Area mm²) Ratio : Sample/Std.

	Analyte	I.S	Ratio
Sample	0.0×0.0÷2 (0.0)	15.5×62.0÷2 (480.5)	0.00
0.1ppm Std.	9.5×77.0÷2 (365.8)	14.5×55.0÷2 (398.8)	0.92

CONFIDENTIAL

PROPERTY OF

MOBAY CHEMICAL CORPORATION
AGRICULTURAL CHEMICALS DIVISION

*** SAMPLE IDENTITY # 13.00 dated 10/20/1981 Tuesday

ION MASSES	127.00	161.00
DWELL TIMES (msec)	50.00	550.00
MAXIMUM ABUNDANCE	81.11	84.84

RUN 7 TOTAL RUN TIME = 6.9 AMOUNT INJECTED = 10.00

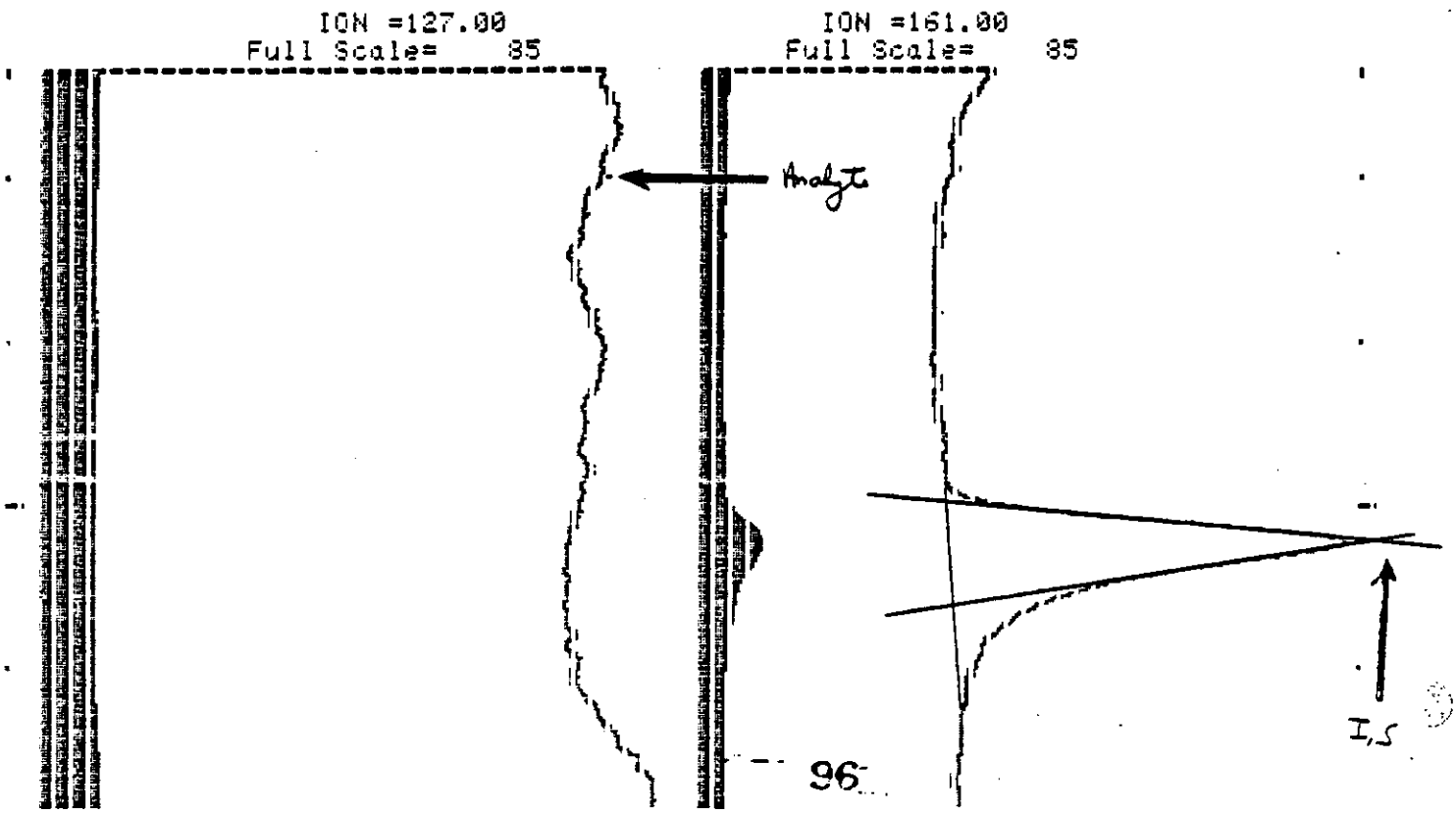

80265

(Typical Std Used for Egg Samples)

Sample & No. _____ NBR 1-196-60

Octopus Sod - hydrolyzed + decarboxylated

Baylaton

Dates: Extraction 10-9-81 Injection 10-26-81

Response (Area mm² Ratio): Sample/Std.

	Analyte	I.S.	Ratio
Sample			
Octopus Std	9.5×42.0:2 (199.5)	13.5×15.0:2 (101.2)	1.97

CONFIDENTIAL

PROPERTY OF

MOBAY CHEMICAL CORPORATION
AGRICULTURAL CHEMICALS DIVISION

*** SAMPLE IDENTITY # 12.00 dated 10/26/1981 Monday

ION MASSES	127.00	161.00
DWELL TIMES (msec)	50.00	550.00
MAXIMUM ABUNDANCE	72.56	31.30

RUN 1 TOTAL RUN TIME = 8.9 AMOUNT INJECTED = 10.00

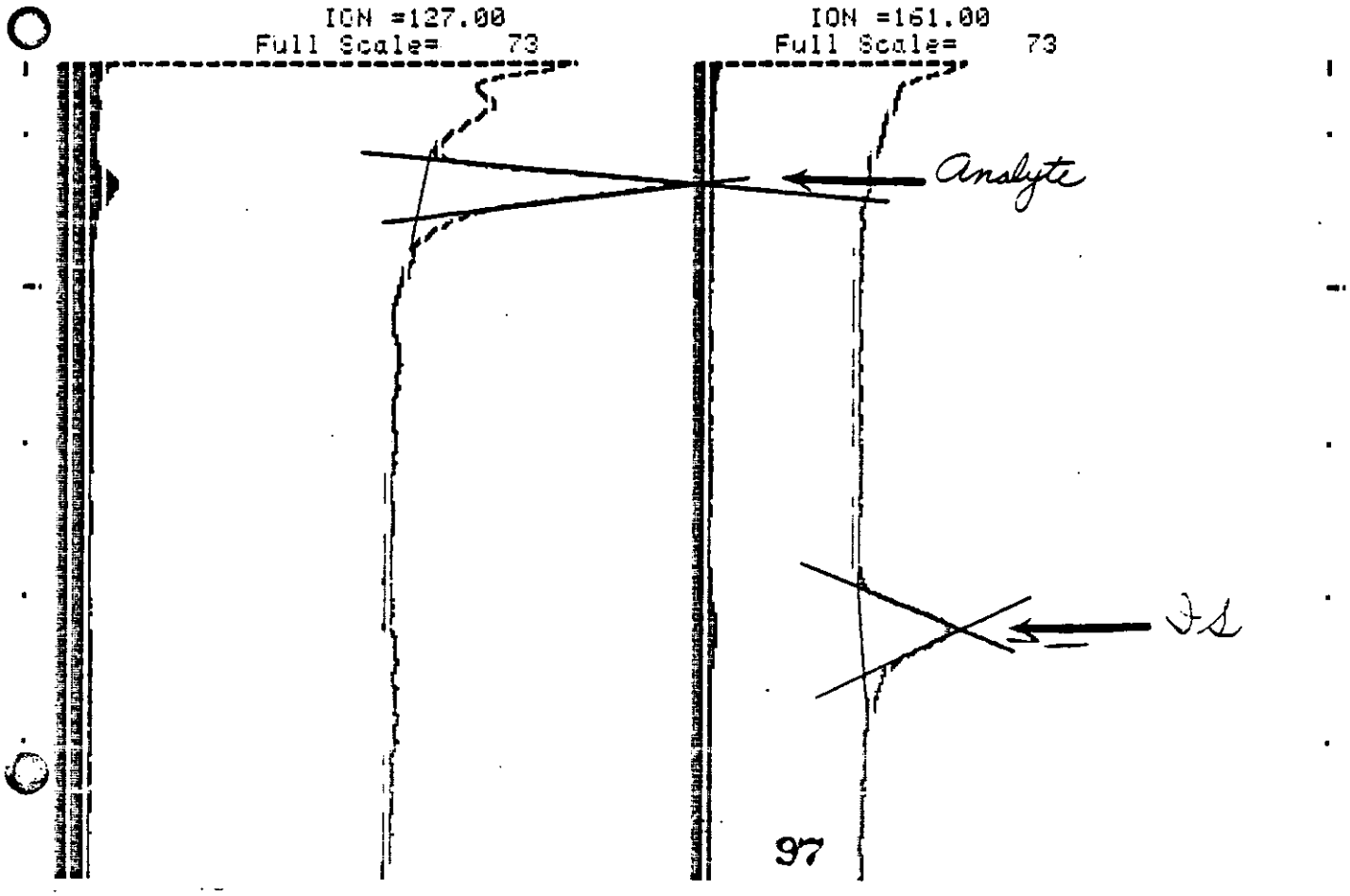

80265

Sample & No. _____ NBR 1-196-60

50 gm Control Chicken Egg

Dates: Extraction 10-9-81 Injection 10-26-81

Response (Area mm² Ratio): Sample/Std.

	Analyte	I.S.	Ratio
Sample	0.0×0.0÷2 (0.0)	14.5×23.0÷2 (166.8)	0.00
0.01 ppm Std	9.5×42.0÷2 (199.5)	13.5×15.0÷2 (101.2)	1.97

CONFIDENTIAL

PROPERTY OF

MOBAY CHEMICAL CORPORATION
AGRICULTURAL CHEMICALS DIVISION

*** SAMPLE IDENTITY # 1.00 dated 10/26/1981 Monday

ION MASSES	127.00	161.00
DWELL TIMES (msec)	50.00	550.00
MAXIMUM ABUNDANCE	56.24	31.98

RUN 2 TOTAL RUN TIME = 8.7 AMOUNT INJECTED = 10.00

ION =127.00
Full Scale= 56

ION =161.00
Full Scale= 56

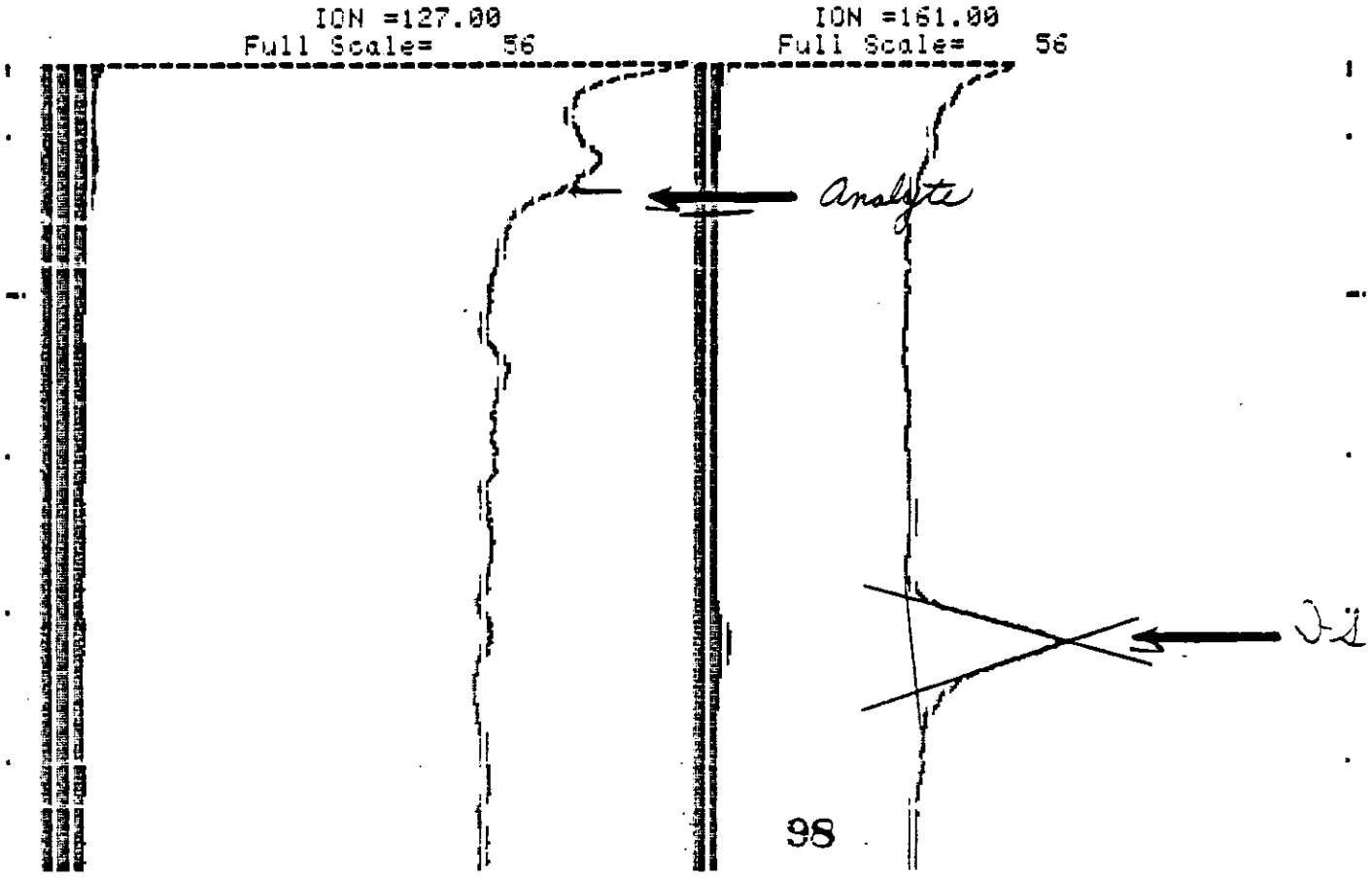

80265

Sample & No. _____ NBR 1-196-60

50ppm Control Chicken Egg Fortified with 0.01ppm Bayleton

Dates: Extraction 10-9-81 Injection 10-26-81

Response (Area mm² / Ratio): Sample/Std.

	Analyte	÷	I.S	Ratio
Sample	11.0×73.0 ÷ 2 (401.5)		13.5×31.5 ÷ 2 (212.6)	1.89
0.01ppm Std	9.5×52.0 ÷ 2 (247.0)		13.5×17.5 ÷ 2 (118.1)	2.09

CONFIDENTIAL

PROPERTY OF

MOBAY CHEMICAL CORPORATION
AGRICULTURAL CHEMICALS DIVISION

*** SAMPLE IDENTITY # 2.00 dated 10/26/1981 Monday

ION MASSES	127.00	161.00
DWELL TIMES (msec)	50.00	550.00
MAXIMUM ABUNDANCE	189.68	74.83

RUN 3 TOTAL RUN TIME = 8.9 AMOUNT INJECTED = 10.00

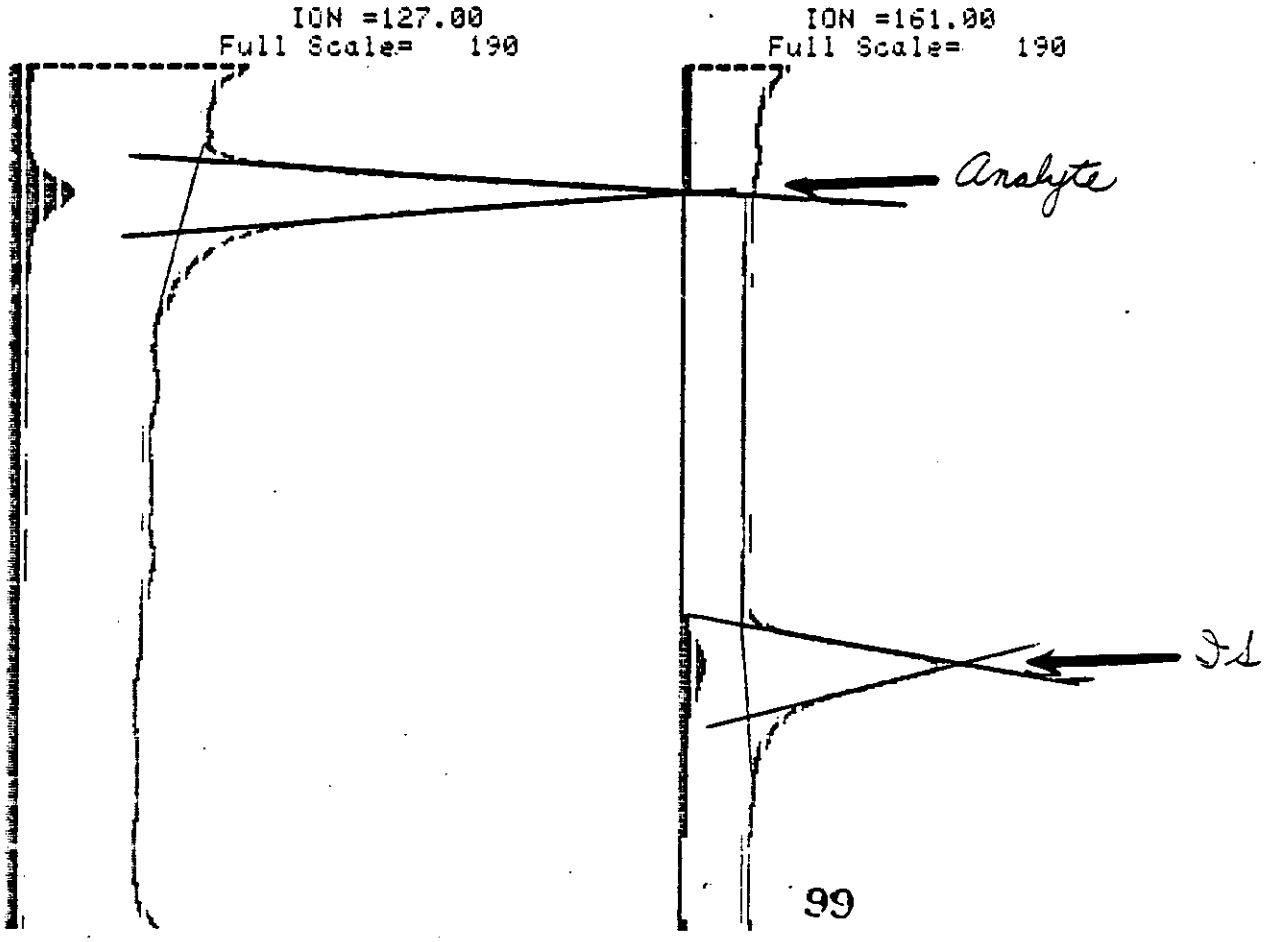

80265

Sample & No. _____ NBR 1796-60

50gm Control Chicken Egg - Fortified with 0.005 ppm Bayleton

Dates: Extraction 10-9-81 Injection 10-26-81

Response (Area mm² Ratio): Sample/Std.

	Analyte	I.S.	Ratio
Sample	10.5 × 32.5 ÷ 2 (170.6)	15.5 × 19.5 ÷ 2 (151.1)	1.13
0.01 ppm Std	9.5 × 52.0 ÷ 2 (247.0)	13.5 × 17.5 ÷ 2 (118.1)	2.09

CONFIDENTIAL
PROPERTY OF
MOBAY CHEMICAL CORPORATION
AGRICULTURAL CHEMICALS DIVISION

*** SAMPLE IDENTITY # 3.00 dated 10/26/1981 Monday

ION MASSES	127.00	161.00
DWELL TIMES (msec)	50.00	550.00
MAXIMUM ABUNDANCE	63.45	28.64

RUN 5 TOTAL RUN TIME = 8.9 AMOUNT INJECTED = 10.00

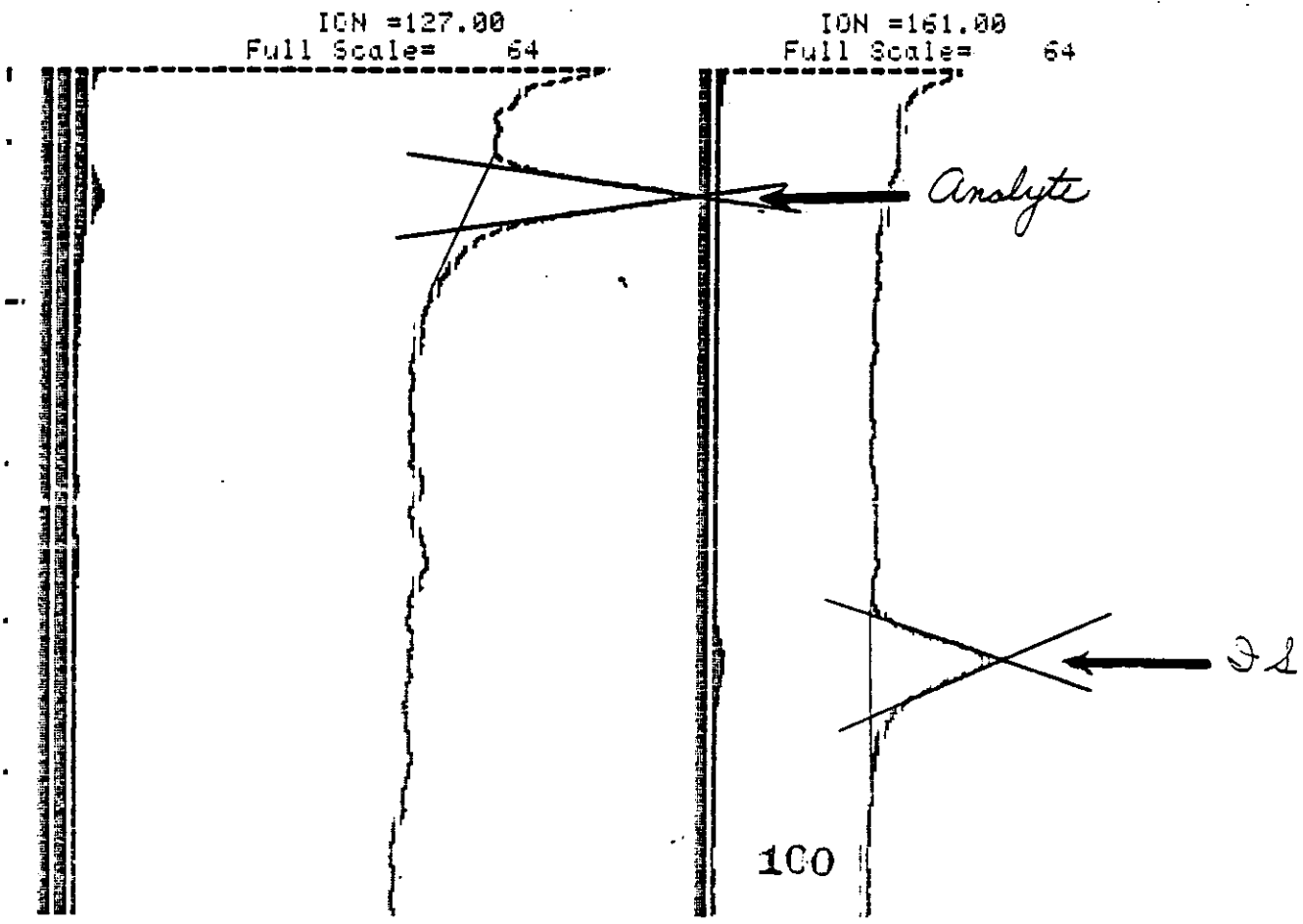

80265

Sample & No. _____ NBR 1-196-60

50 gm Control Chicken Egg Fortified with 0.01 ppm Kwc 0.519

Dates: Extraction 10-9-81 Injection 10-28-81

Response (Area mm² / Ratio): Sample/Std.

	Analyte	I.S	Ratio
Sample	11.0 × 95.0 ÷ 2 (467.5)	14.0 × 43.5 ÷ 2 (304.5)	1.54
0.01 ppm Std	9.0 × 70.0 ÷ 2 (315.0)	13.5 × 28.0 ÷ 2 (189.0)	1.67

CONFIDENTIAL

PROPERTY OF

MOBAY CHEMICAL CORPORATION
AGRICULTURAL CHEMICALS DIVISION

*** SAMPLE IDENTITY # 4.00 dated 10/28/1981 Wednesday

ION MASSES	127.00	161.00
DWELL TIMES (msec)	50.00	550.00
MAXIMUM ABUNDANCE	644.32	297.84

RUN 2 TOTAL RUN TIME = 8.4 AMOUNT INJECTED = 10.00

ION =127.00
Full Scale= 644

ION =161.00
Full Scale= 644

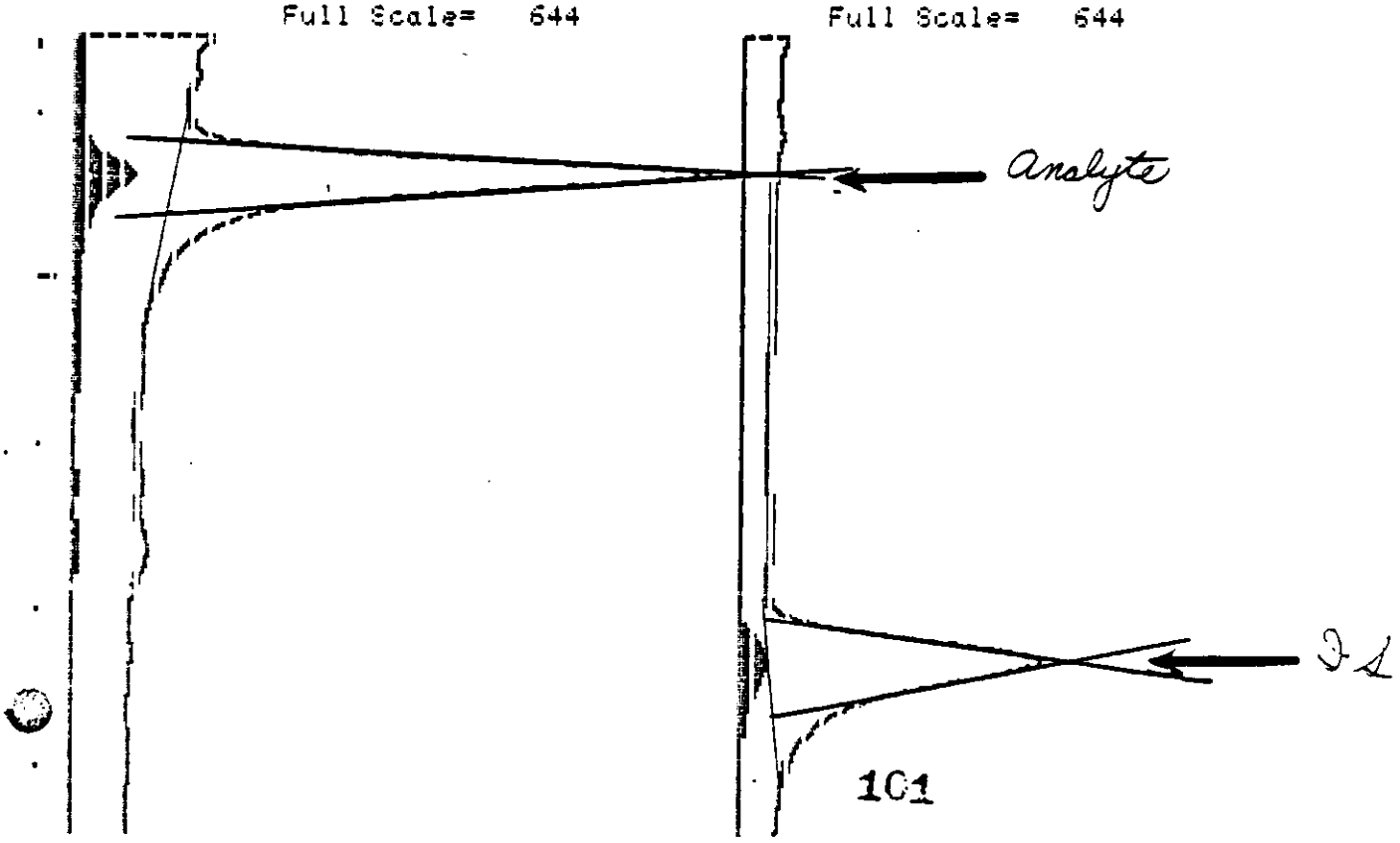

80265

Sample & No. _____ NBR 1-196-60

50gm Control Chicken Egg Spiked with 0.005 ppm SWG 0519

Dates: Extraction 10-9-81 Injection 10-28-81

Response (Area mm² / Ratio): Sample/Std.

	Analyte	÷	I.S	Ratio
Sample	13.0 × 45.0 ÷ 2 (292.5)		16.0 × 41.0 ÷ 2 (328.0)	0.89
0.01ppm Std	10.0 × 60.0 ÷ 2 (300.0)		13.5 × 24.5 ÷ 2 (165.4)	1.81

CONFIDENTIAL
PROPERTY OF
MOBAY CHEMICAL CORPORATION
AGRICULTURAL CHEMICALS DIVISION

*** SAMPLE IDENTITY # 5.00 dated 10/28/1981 Wednesday

ION MASSES	127.00	161.00
DWELL TIMES (msec)	50.00	550.00
MAXIMUM ABUNDANCE	96.97	58.58

RUN 8 TOTAL RUN TIME = 8.4 AMOUNT INJECTED = 10.00

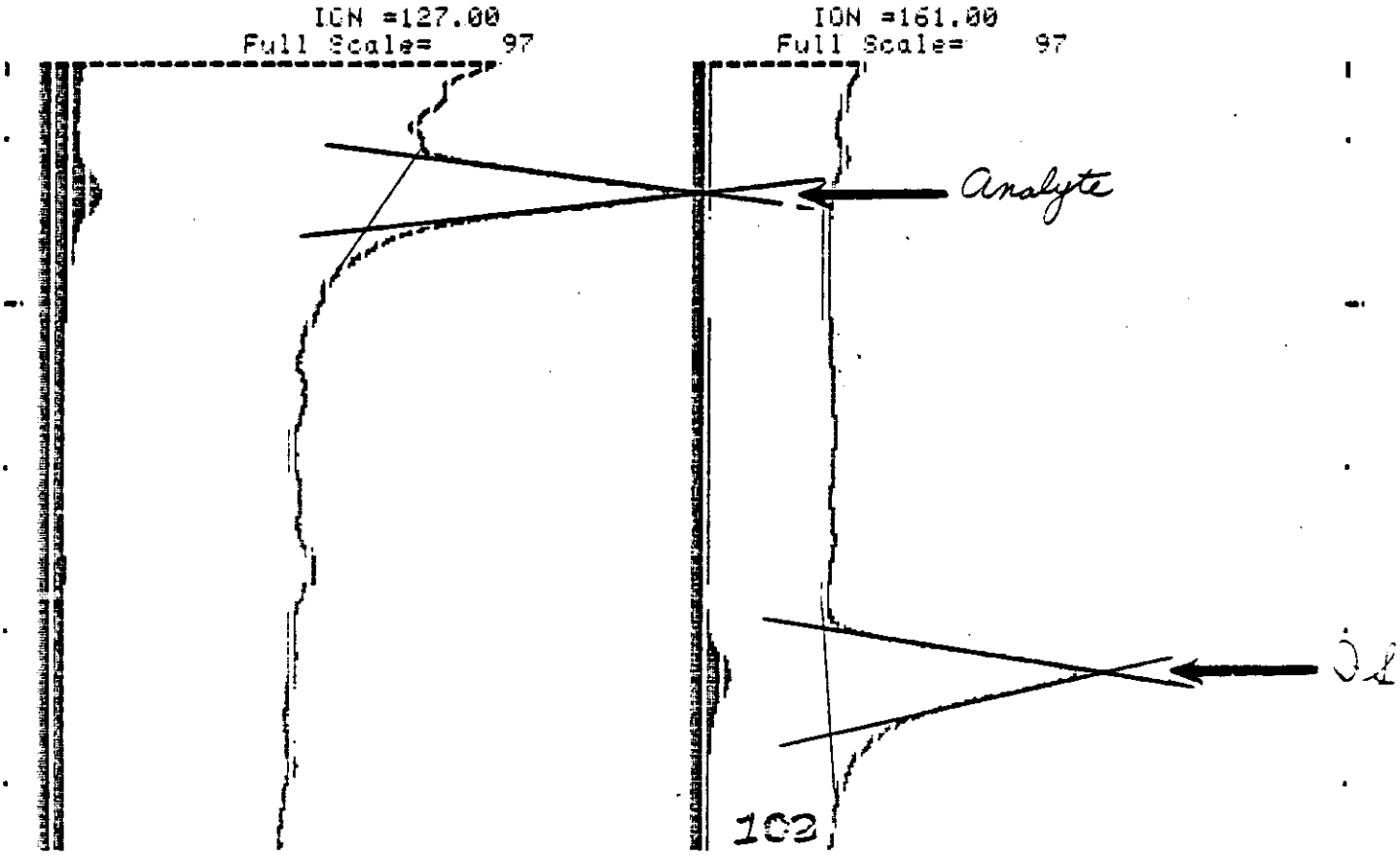

80265

Sample & No. _____ NBR 1-196-60

50gm Control Chicken Egg Spiked with 0.01ppm Kuxi 1640

Dates: Extraction 10-9-81 Injection 10-28-81

Response (Area mm² / Ratio): Sample/Std.

	Analyte	I.S	Ratio
Sample	15.5×41.5÷2 (321.6)	14.0×28.5÷2 (199.5)	1.61
0.01ppm Std	10.0×60.0÷2 (300.0)	13.5×24.5÷2 (165.4)	1.81

CONFIDENTIAL

PROPERTY OF

MOBAY CHEMICAL CORPORATION
AGRICULTURAL CHEMICALS DIVISION

*** SAMPLE IDENTITY # 6.00 dated 10/28/1981 Wednesday

ION MASSES	127.00	161.00
DWELL TIMES (msec)	50.00	550.00
MAXIMUM ABUNDANCE	90.64	45.55

RUN10 TOTAL RUN TIME = 8.4 AMOUNT INJECTED = 10.00

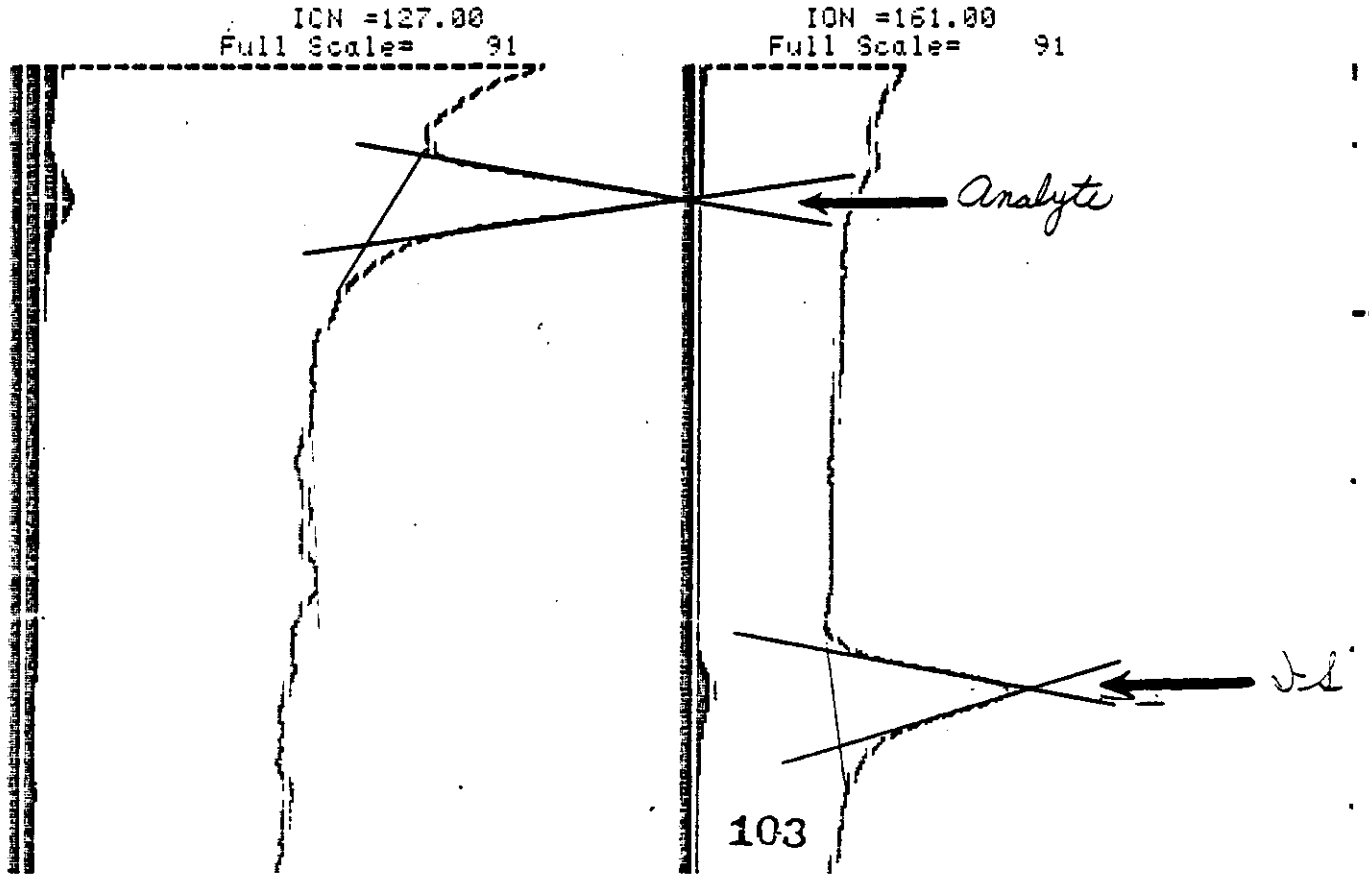

80265

Sample & No. _____ NBR 1-796-60

50gm Control Chicken Egg Sorbfield with 0.005 ppm KWG 1640

Dates: Extraction 10-7-81 Injection 10-28-81

Response (Area mm² / Ratio): Sample/Std.

	Analyte	I.S.	Ratio
Sample	14.0 × 45.0 ÷ 2 (315.0)	16.0 × 45.5 ÷ 2 (364.0)	0.87
0.01 ppm Std	9.0 × 69.0 ÷ 2 (310.5)	14.5 × 26.5 ÷ 2 (192.1)	1.62

CONFIDENTIAL

PROPERTY OF

MOBAY CHEMICAL CORPORATION
AGRICULTURAL CHEMICALS DIVISION

*** SAMPLE IDENTITY # 7.00 dated 10/28/1981 Wednesday

ION MASSES	127.00	161.00
DWELL TIMES (msec)	50.00	550.00
MAXIMUM ABUNDANCE	106.33	70.23

RUN 1 TOTAL RUN TIME = 8.4 AMOUNT INJECTED = 10.00

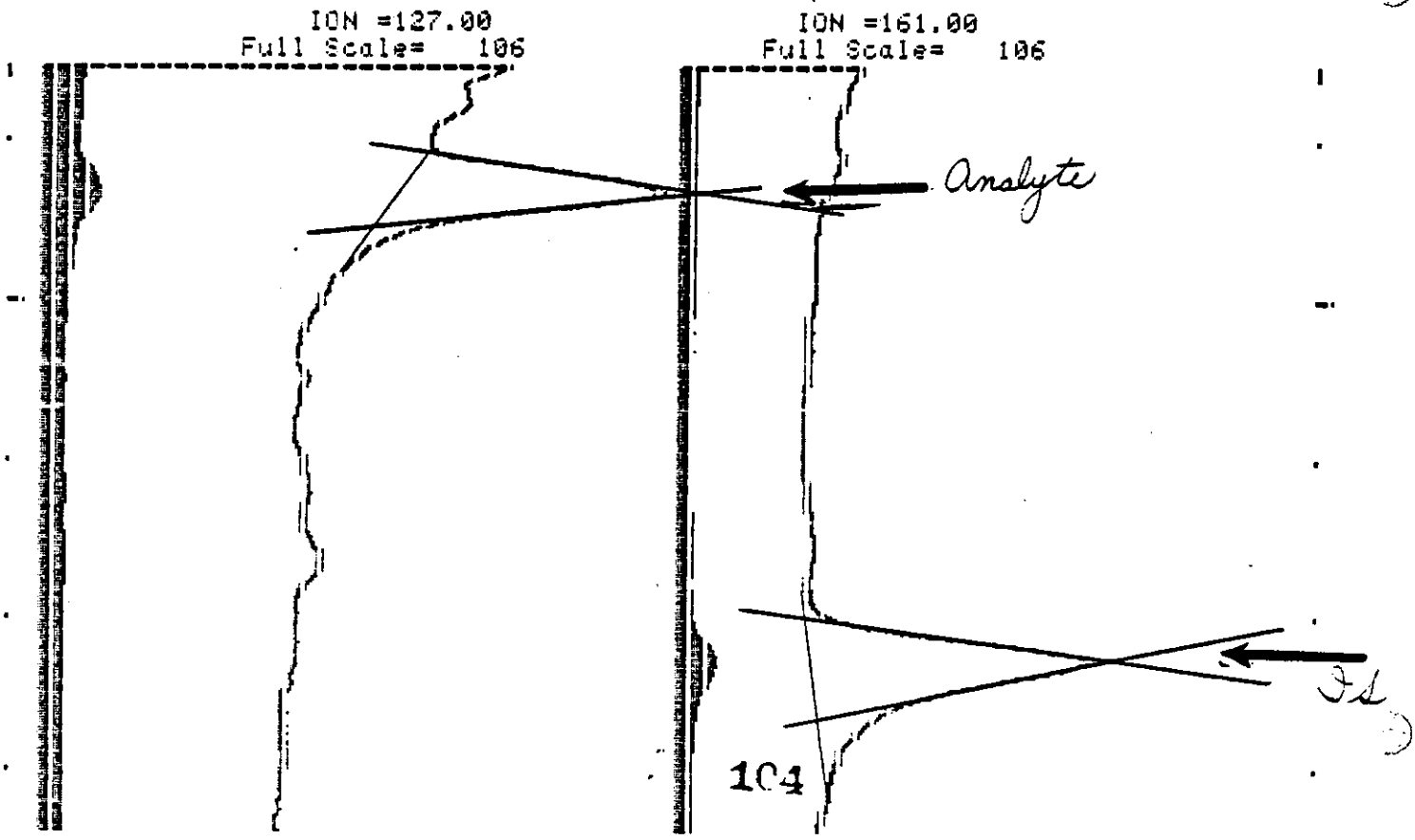

80265

Sample & No. _____ NBR 1-196-60

50gm Control Chicken Egg Fortified with 0.01ppm KWG 1323

Dates: Extraction 10-7-81 Injection 10-28-81

Response (Area mm² Ratio): Sample/Std.

	Analyte	I.S.	Ratio
Sample	11.5 × 72.5 ÷ 2 (416.9)	15.5 × 32.5 ÷ 2 (251.9)	1.66
0.01ppm Std	9.0 × 69.0 ÷ 2 (310.5)	14.5 × 26.5 ÷ 2 (192.1)	1.62

CONFIDENTIAL

PROPERTY OF

MOBAY CHEMICAL CORPORATION
AGRICULTURAL CHEMICALS DIVISION

*** SAMPLE IDENTITY # 8.00 dated 10/28/1981 Wednesday

ION MASSES	127.00	161.00
DWELL TIMES (msec)	50.00	550.00
MAXIMUM ABUNDANCE	244.70	99.61

RUN 3 TOTAL RUN TIME = 8.4 AMOUNT INJECTED = 10.00

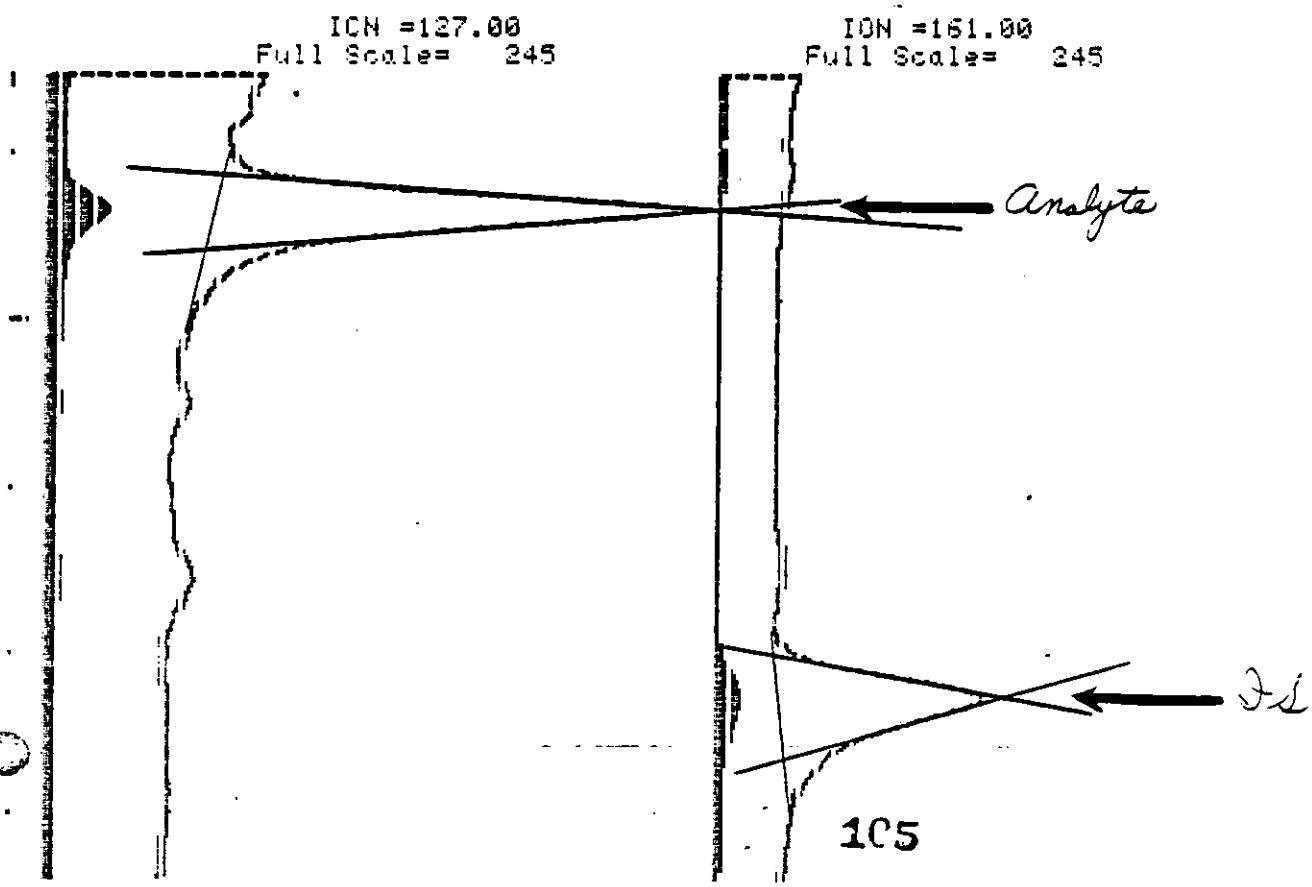

105

80265

NBR 1-196-60

50gm Cooked Chicken Egg Enriched with 0.005 ppm KWG 1323

Dates: Extraction 10-9-81 Injection 10-28-81

Response (Area mm² / Ratio): Sample/Std.

	Analyte	:	IS	Ratio
Sample	11.5 × 51.5 : 2 (296.1)		15.5 × 350 : 2 (271.2)	1.09
0.01 ppm Std	10.0 × 70.0 : 2 (350.0)		12.5 × 250 : 2 (156.2)	2.07

CONFIDENTIAL

PROPERTY OF

MOBAY CHEMICAL CORPORATION
AGRICULTURAL CHEMICALS DIVISION

*** SAMPLE IDENTITY # 9.00 dated 10/28/1981 Wednesday

ION MASSES	127.00	161.00
DWELL TIMES (msec)	50.00	550.00
MAXIMUM ABUNDANCE	123.08	63.33

RUN 4 TOTAL RUN TIME = 8.4 AMOUNT INJECTED = 10.00

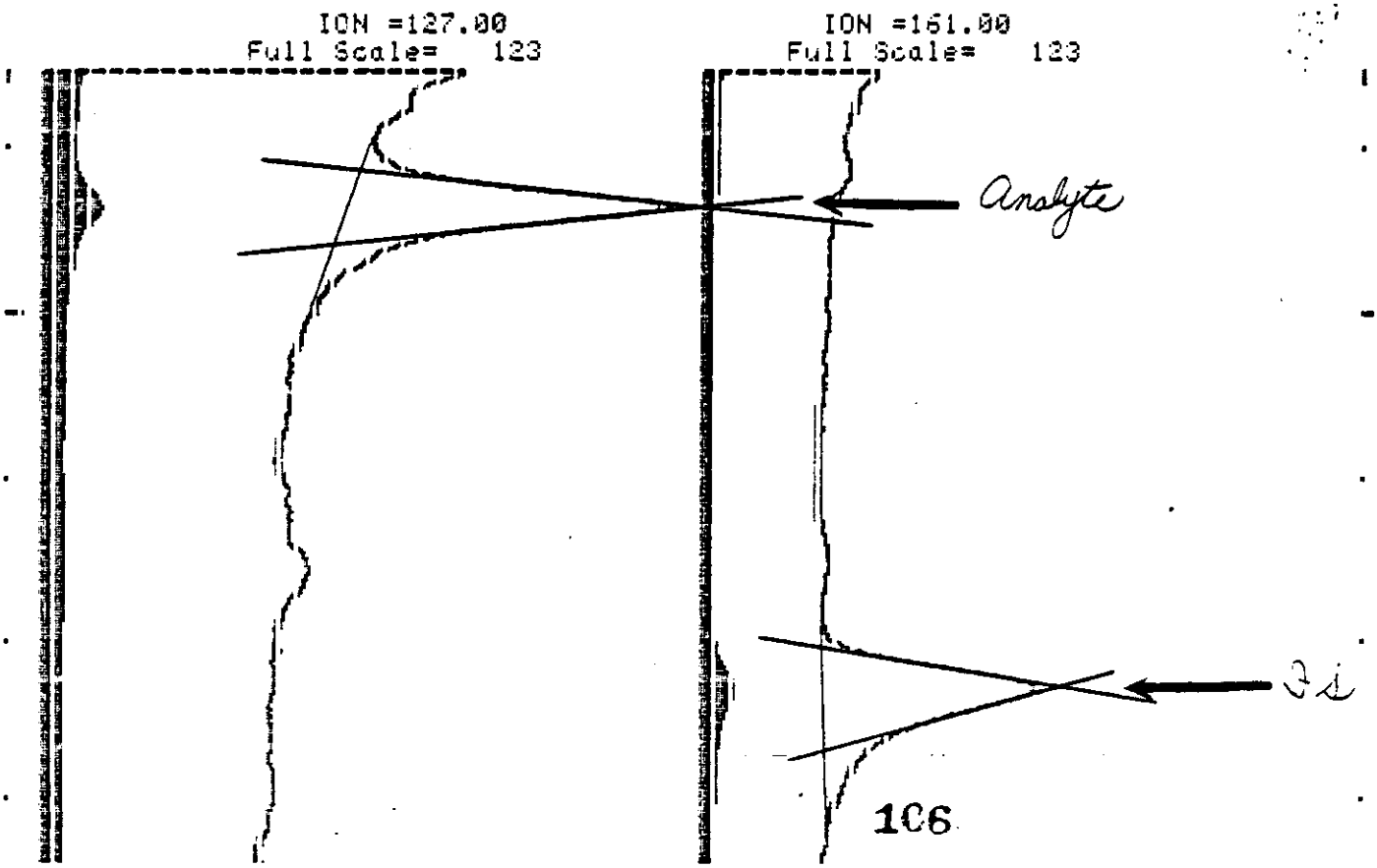

80265

Sample & No. _____ NBR 1-196-60

Sogon Control Chicken Egg Spiked with 0.01 ppm Kuig 1342

Dates: Extraction 10-9-81 Injection 10-28-81

Response (Area mm² / Ratio): Sample/Std.

	Analyte	IS	Ratio
Sample	10.5×610 ÷ 2 (320.2)	15.5×19.5 ÷ 2 (151.1)	212
0.01 ppm Std	10.0×700 ÷ 2 (350.0)	13.5×25.0 ÷ 2 (168.8)	207

CONFIDENTIAL

PROPERTY OF
MOBAY CHEMICAL CORPORATION
AGRICULTURAL CHEMICALS DIVISION

*** SAMPLE IDENTITY # 10.00 dated 10/28/1981 Wednesday

ION MASSES	127.00	161.00
DWELL TIMES (msec)	50.00	550.00
MAXIMUM ABUNDANCE	167.47	55.85

RUN 6 TOTAL RUN TIME = 8.4 AMOUNT INJECTED = 10.00

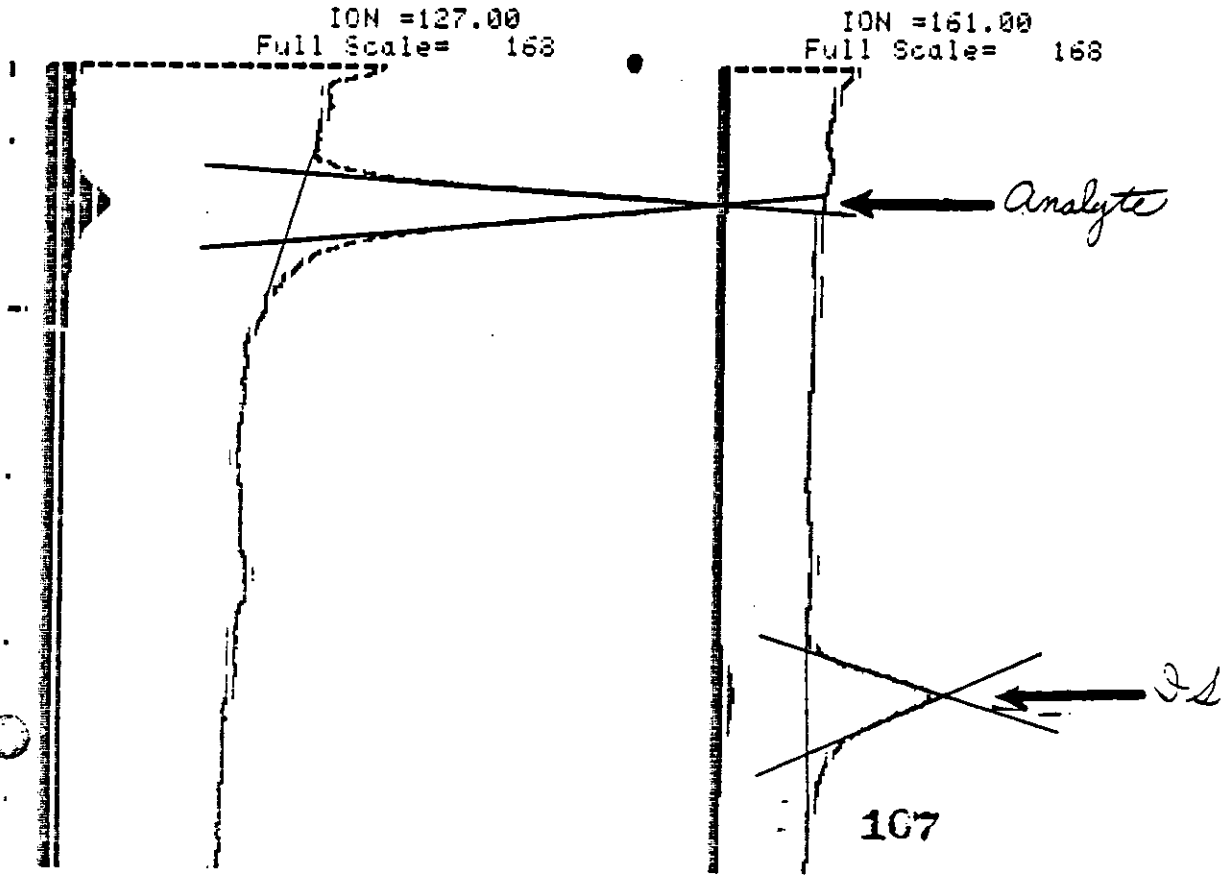

80265

Sample & No. _____ NBR 1496-60

50 gm Control Chicken Egg Fortified with 0.005 ppm KWG 1342

Dates: Extraction 10-9-81 Injection 10-28-81

Response (Amount Ratio): Sample/Std.

	Analyte	I.S	Ratio
Sample	120 x 63.5 x 2 (381.0)	15.5 x 41.0 x 2 (317.3)	1.20
0.01 ppm Std	10.5 x 74.5 x 2 (341.1)	13.5 x 23.0 x 2 (155.2)	2.52

CONFIDENTIAL

PROPERTY OF

MOBAY CHEMICAL CORPORATION
AGRICULTURAL CHEMICALS DIVISION

*** SAMPLE IDENTITY # 11.00 dated 10/28/1981 Wednesday

ION MASSES	127.00	161.00
DWELL TIMES (msec)	50.00	550.00
MAXIMUM ABUNDANCE	271.63	132.94

RUN 7 TOTAL RUN TIME = 8.4 AMOUNT INJECTED = 10.00

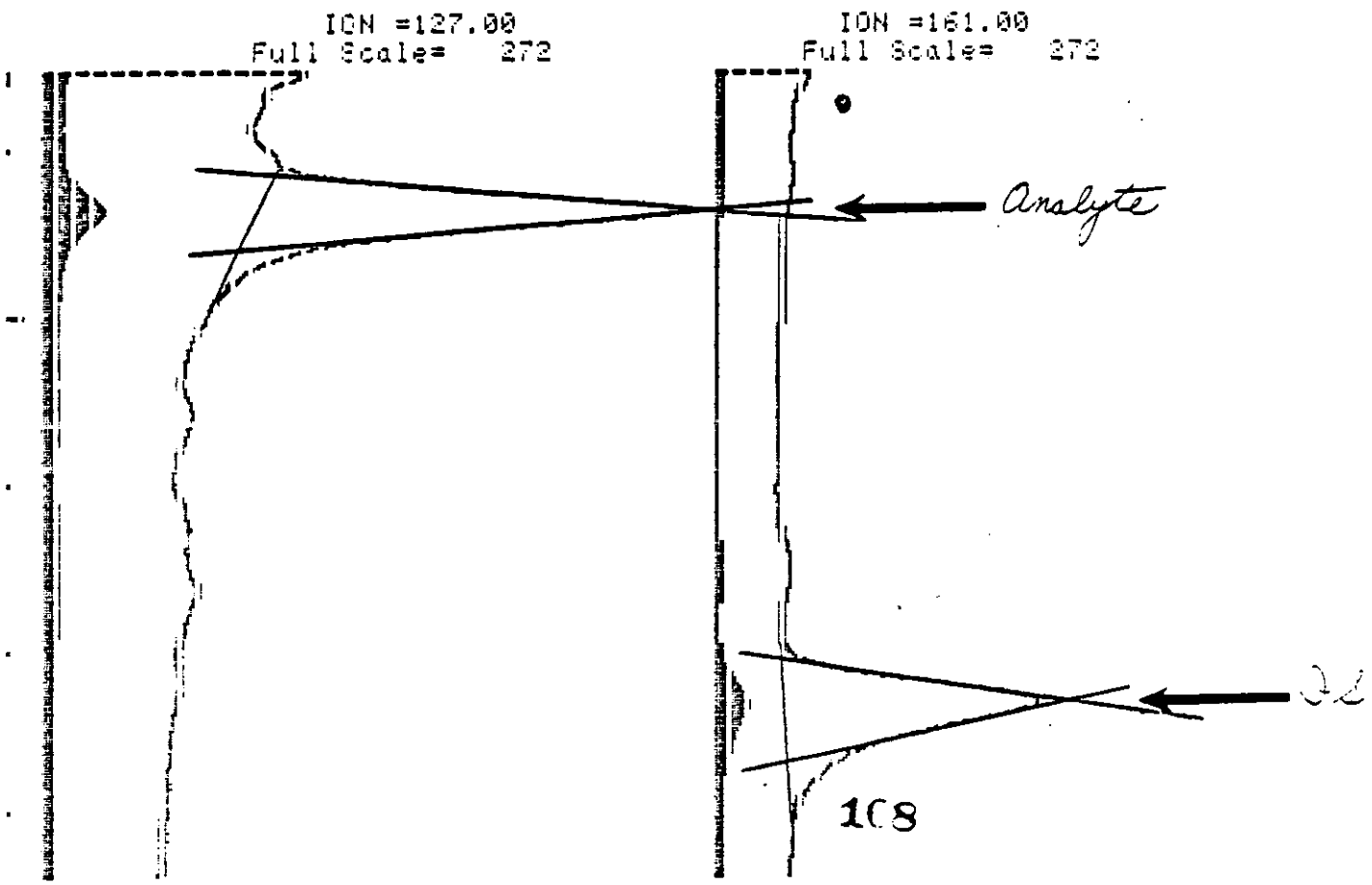

108