US EPA ARCHIVE DOCUMENT

69531

MOBAY CHEMICAL CORPORATION
AGRICULTURAL CHEMICALS DIVISION

Research and Development Department

BAYLETON

TITLE Analysis of ®BAYLETON and its Metabolites in Cattle Tissues and Milk by Gas Chromatography/Mass Spectrometry

AUTHORS J S Kruplak, B Weissenburger and G O Breault

ABSTRACT A procedure is described for the analysis of BAYLETON and all known metabolites free or conjugated in bovine liver, kidney, muscle, fat or milk The tissues are extracted using methanol in a Polytron blender After vacuum filtration and rotary vacuum evaporation, the oily extract is partially cleaned up by passing it through XAD-4 ion exchange resin, eluting with methanol Following concentration by rotary vacuum evaporation, the residue is hydrolyzed by refluxing with concentrated hydrochloric acid, which converts BAYLETON and metabolites to p-chlorophenol The resulting phenol is steam distilled and further cleaned up by partitioning with acid and base followed by derivatization using 2,4-dinitrofluorobenzene If necessary, the derivative is further purified by passing it through an alumina column An internal standard of 3,4-dichlorophenol is added before derivatization and the samples are assayed using gas chromatography/mass spectrometry, monitoring the specific ions 127 or 294 (161 or 328 for internal standard) for primary or confirmatory analysis respectively

DATE June 8, 1981

APPROVED BY D R Flint
D R Flint

CONFIDENTIAL

NOTEBOOK REFERENCE 81R-137

PROPERTY OF

ADC Project #. 637-A

MOBAY CHEMICAL CORPORATION
AGRICULTURAL CHEMICALS DIVISION

BAYLETON is a Reg TM of the Parent Company of Farbenfabriken Bayer GmbH, Leverkusen

69531

RESEARCH REPORT

ADC Project #637 A

BAYLETON TOTAL RESIDUE METHOD VERIFICATION (BOVINE)

for

MOBAY CHEMICAL CORPORATION
Agricultural Division
P O Box 4913 Hawthorn Road
Kansas City MO 64120

by

ANALYTICAL DEVELOPMENT CORPORATION
P O Box 429 1875 Willow Park Way
Monument CO 80132

CONFIDENTIAL

PROPERTY OF

MOBAY CHEMICAL CORPORATION
AGRICULTURAL CHEMICALS DIVISION

By Joan F Kruplak
Barbara Weissenburger

May 6 1981

BAYLETON TOTAL RESIDUE METHOD VERIFICATION (BOVINE)

The following method has been validated for quantitation of total residues of Bayleton and metabolites in bovine liver kidney muscle fat and milk

CONFIDENTIAL

PROPERTY OF

MOBAY CHEMICAL CORPORATION
AGRICULTURAL CHEMICALS DIVISION

I EXTRACTIONS

A Tissues

1 Twenty five gram samples weighed into a 1 liter bottle are polytron extracted two minutes in 200 ml methanol

2 Samples are vacuum filtered over Reeves Angel glass fiber filter paper into a 500 ml flask The extraction bottle and filter cake are rinsed twice with 25 ml methanol

3 The combined extract and rinses are rotary evaporated to dryness or oil in a 50 C water bath

B Milk

1 Samples of 100 g weighed into a 1 liter bottle are polytron extracted two minutes in 200 ml methanol plus 100 ml acetone plus 25 gm Hyflo Supercel

2 The mixtures are vacuum filtered over Reeves Angel glass fiber filter paper into a 500 ml flask The extraction bottle and filter cake are rinsed twice with 25 ml methanol

3 The combined extract and rinses are rotary evaporated to ~20 ml aqueous volume in a 50 C water bath

II XAD COLUMN CHROMATOGRAPHY

A Column Preparation

1 Tamp plug of glass wool into a 20 mm x 450 mm reservoir column Fill to the bell with methanol

2 Add XAD 4 (prewashed as in Section VIII) to the column to a height of 175 mm

3 Drain methanol to top of XAD 4

4 Fill column with D I H_2O and drain to top of XAD 4

695

B Chromatographic Procedure

1 To the residue remaining in the flask from Section I A 3 or I B 3 above add 10 ml methanol plus 90 ml D I H_2O Swirl flask and sonicate to dissolve residue as completely as possible Apply to column at a 6 ml/min flow rate Drain to top of XAD 4 Discard

2 Rinse flask with 100 ml 90 10 D I H_2O MeOH and apply to column at a 6 ml/min drip rate Drain to top of XAD 4 Discard

3 Elute the column with 300 ml methanol at a 6 ml/min flow rate

4 Gradually transfer eluant to a 250 ml flask while rotary evaporating solvent to dryness or oil in a 50°C water bath (Azeotrope any remaining water by addition of 20 ml increments of acetonitrile followed by rotary evaporation until dryness is achieved)

Note Quantitation standards are started at this evaporation step For tissues 1 ml of 2 5 µg/ml Bayleton (corresponding to 0 1 ppm in a 25 gm sample) is transferred to a 250 ml flask and rotary evaporated For milk 1 ml of 1 µg/ml Bayleton (corresponding to 0 01 ppm in a 100 gm sample) is transferred to a 250 ml flask and rotary evaporated

C Column Regeneration

Between each sample run regenerate the XAD 4 column in the following manner

Apply in Order
100 ml acetone
200 ml hexane
100 ml acetone
200 ml methanol
200 ml D I H_2O — these steps constitute Section II A Column preparation

CONFIDENTIAL

PROPERTY OF

MOBAY CHEMICAL CORPORATION
AGRICULTURAL CHEMICALS DIVISION

III HYDROLYSIS AND DISTILLATION

A Hydrolysis of Total Bayleton Residues to para Chlorophenol (PCP)

1 To the residue remaining in the flask from step II B 4 add 2 ml acetone 30 ml concentrated hydrochloric acid and two boiling stones

CONFIDENTIAL

PROPERTY OF

69531

MOBAY CHEMICAL CORPORATION
AGRICULTURAL CHEMICALS DIVISION

2 Reflux under 500 mm Allihn water cooled condensers overnight (~16 hrs) Use of long condensers minimizes escape of HCl fumes and lessens resultant equipment damage

3 At the conclusion of hydrolysis unplug the heating mantles and allow the samples to cool to room temperature prior to disconnection from condensers This minimizes loss of PCP as it is extremely volatile Mark the volume level of each flask with an indelible marker

B Steam Distillation of PCP

1 Add 100 ml of D I H_2O to each flask through the condenser

2 Disconnect the flasks from the condensers and interpose a distillation adapter between the reflux flask the condenser and a collection flask containing 15 ml 1N NaOH

3 Heat to boiling and distill ~100 ml water over until the volume in the reflux flask returns to the pre marked level (step III A 3) Unplug heating mantles

4 Let samples cool to room temperature and rinse condenser with ~5 ml D I H_2O which is added to the distillate

IV PARTITION CLEANUP

A Sodium Bicarbonate Wash

1 Adjust pH of distillate to <2 (as determined by pH indicator sticks) with concentrated hydrochloric acid

2 Transfer distillate to 250 ml separatory funnel and extract three times with 50 ml dichloromethane [1] Discard distillate Combine DCM extracts in 500 ml separatory funnel

3 Wash combined DCM extracts with 100 ml 5 $NaHCO_3$

4 Back extract aqueous with 50 ml DCM

[1] Unless otherwise noted all partitions involve 30 seconds of vigorous shaking

CONFIDENTIAL
PROPERTY OF
MOBAY CHEMICAL CORPORATION
AGRICULTURAL CHEMICALS DIVISION
69531

5 Combine all DCM fractions in a 500 ml separatory funnel and discard $NaHCO_3$

B Base ↔ Acid Extraction

1 Extract combined DCM fractions three times with 100 ml 1N NaOH Discard DCM

2 Acidify combined aqueous fractions to pH <2 (determined by pH indicator sticks) with concentrated sulfuric acid Use caution as sputtering will occur Allow to cool to room temperature

3 Extract acidified aqueous twice with 100 ml DCM Do not collect any acid with the DCM fraction Combine DCM extracts in a 250 ml flask and add 2 ml 0 5N NaOH to convert PCP to the less volatile sodium salt Swirl to mix

4 Remove DCM on a rotary evaporator using an unheated water bath Remove all solvent (as indicated by smell) while maximizing aqueous residue Allow to go to dryness if this is necessary to remove all traces of DCM If required add D I H_2O to samples to approximate a 2 ml volume

Note The internal standard is started at this step For tissue analyses pipet 10 ml of a 4 µg/ml solution of 3 4 dichlorophenol in acetone into a flask For milk analyses pipet 5 ml of the 4 µg/ml solution of 3 4 dichloro phenol in acetone into a flask Add 2 ml of 0 5N NaOH and remove the acetone on a rotary evaporator using an unheated water bath The internal standard is then treated as any other sample

V DERIVATIZATION

A Preparation of Derivatizing Solution

1 In a 250 ml separatory funnel combine 15 ml acetone 1 5 ml dinitrofluorobenzene (DNFB) and 150 ml 5 sodium tetraborate [1]

2 Wash derivatizing solution three times with 100 ml hexane Discard hexane

[1] These amounts result in enough derivatizing solution being prepared to derivatize 15 samples

CONFIDENTIAL 69531

PROPERTY OF
MOBAY CHEMICAL CORPORATION
AGRICULTURAL CHEM DIVISION

B Sample Derivatization

1 Add 10 ml of derivatizing solution to the residue from Section IV B 4

2 Stopper the flasks swirl the contents and place in a 50 C sand bath for 15 min

3 Remove from sand bath and let cool to room temperature

4 Transfer the sample to a 125 ml separatory funnel and extract three times with 10 ml iso octane Collect any emulsion with the iso octane fraction

5 Combine iso octane extracts and wash twice with 15 ml 0 5N NaOH for 15 seconds followed by five washes with D I H_2O for 15 seconds each Any emulsions formed are not discarded with the aqueous washes but are kept with the iso-octane fraction Discard all aqueous washes

VI ALUMINA COLUMN CHROMATOGRAPHY

A Column Preparation

1 Tamp plug of glass wool into a 20 mm x 450 mm reservoir column Fill to the reservoir with hexane

2 Add 10 g 2% deactivated basic alumina (prepared as in Section VIII A 1) Let packing settle

3 Add 5 g Na_2SO_4 (prewashed with acetone and methanol) Drain hexane to top of Na_2SO_4

B Chromatographic Procedure

1 Apply sample in 30 ml iso octane (from Section V B 5) to basic alumina column at a 15 ml/min flow rate Drain to top of Na_2SO_4 and discard

2 Rinse sample flask 3 times with 10 ml hexane followed by 100 ml hexane Apply each rinse to the column at a 15 ml/min flow rate draining each rinse to the top of the Na_2SO_4 before applying the next Discard all hexane

3 Elute column with 250 ml 60 40 hexane ethyl acetate at a 15 ml/min flow rate Collect eluant for quantitation

69531

4 Rotary evaporate samples to dryness in a 40 C water bath

5 Dilute internal standard sample in 20 ml nexane for tissues or 10 ml hexane for milk to yield a 2 µg/ml 3 4 dichlorophenol solution For quantitation tissue samples are diluted using 1 ml of the 2 µg/ml 3 4 dichlorophenol solution Milk samples are diluted using 0 5 ml of the 2 µg/ml ɔ 4 dichloro phenol solution

VII QUANTITATION BY GAS CHROMATOGRAPHY/MASS SPECTROMETRY

Instrument Hewlett Packard 5992A GC/MS System

Program Selected Ion Monitor

Column 4 x 2 mm 3 Dexsil 300 on 80/100 mesh Chromosorb W HP

Temperatures Oven 240 C isothermal
Injector 250 C

Carrier Gas Helium at 25 ml/min 40 psi

Solvent elute prior to voltage application 2 3 min

Ions monitored for primary quantitation

127 mass of parachlorophenol minus 1 hydrogen

161 mass of 3 4 dichlorophenol minus 1 hydrogen

Ions monitored for confirmatory quantitation

294 mass of DNFB derivatized parachlorophenol

328 mass of DNFB derivatized ɔ 4 dichlorophenol

Injection volume 6 µl

Retention times DNFB derivative of PCP ~ɔ minutes

DNFB d~rivative of 3 4 dichlorophenol ~5 minutes

CONFIDENTIAL

PROPERTY OF

MOBAY CHEMICAL CORPORATION
AGRICULTURAL CHEMICALS DIVISION

69531

CONFIDENTIAL

PROPERTY OF

MOBAY CHEMICAL CORPORATION
AGRICULTURAL CHEMICALS DIVISION

VIII REAGENTS AND GLASSWARE HANDLING

A Reagents

1 Alumina Basic Woelm Super 1 ICN
Activate overnight at 120°C prior to 2% deactivation with D I H_2O Let stand overnight prior to use

2 Acetone Fisher pesticide grade

3 Dichloromethane Fisher pesticide grade

4 Dinitrofluorobenzene Aldrich
Store in a dessicator at room temperature

5 Ethyl Acetate Fisher pesticide grade

6 Hexane Fisher pesticide grade

7 Hydrochloric Acid Dupont electronic grade

8 Hyflo Supercel Fisher

9 Methanol Fisher pesticide grade

10 Sodium Bicarbonate Mallinckrodt 5% solution in D I H_2O (50 g/liter)

11 Sodium tetraborate Baker Analyzed Reagent
5% solution in D I H_2O (50 g/liter)

12 Sodium Hydroxide Fisher
a 1N solution in D I H_2O (40 g/liter)
b 0 5N solution in D I H_2O (20 g/liter)

13 Sodium Sulfate Mallinckrodt prewashed with methanol and acetone

14 Sulfuric Acid Dupont electronic grade

15 2 2 4 trimethyl pentane (iso octane)
Mallinckrodt Nanograde

16 XAD 4 Amberlite polymeric absorbent
Rohm & Haas This must be pre extracted prior to use by three successive 8 hour Soxhlet extractions with 300 ml methanol each time

69531
CONFIDENTIAL
PROPERTY OF
MOBAY CHEMICAL CORPORATION
AGRICULTURAL CHEMICALS DIVISION

B Standard Solutions

1 Stock Solutions

a Bayleton 1 mg/ml Dissolve 10 0 mg of Bayleton in methanol and dilute to volume in a 10 ml volumetric flask

b KWG 0519 mixed isomers 1 mg/ml (Bayleton equivalent solution) Dissolve 10 1 mg of KWG 0519 mixed isomers in methanol and dilute to volume in a 10 ml volumetric flask

c KWG 1640 (ACID) mixed isomers 1 mg/ml (Bayleton equivalent solution) Supplied as Acid I and Acid II Dissolve 5 5 mg of each acid in 10 ml methanol and dilute to volume in a 10 ml volumetric flask

d KWG 1323 1 mg/ml (Bayleton equivalent solution) Dissolve 10 5 mg of KWG 1323 in methanol and dilute to volume in a 10 ml volumetric flask

e KWG 1342 1 mg/ml (Bayleton equivalent solution) Dissolve 10 6 mg of KWG 1342 in methanol and dilute to volume in a 10 ml volumetric flask

Note Bayleton equivalent weights used are based on molecular weight ratios

2 Fortification Standards

a Tissues Pipet 1 ml of the appropriate stock solution into a 10 ml volumetric flask and dilute to volume with methanol This represents 100 µg/ml Bayleton equivalents of the appropriate standard Pipet 2 5 ml of the appropriate 100 µg/ml standard into a 100 ml volumetric flask and dilute to volume with methanol This represents 2 5 µg/ml Bayleton equivalents of the appropriate standard

1 0 ml of the appropriate 2 5 µg/ml standard represents 0 1 ppm Bayleton equivalents in tissues (25 gm)

0 5 ml of the appropriate 2 5 µg/ml standard represents 0 05 ppm Bayleton equivalents in tissues (25 gm)

b Milk Pipet 1 ml of the appropriate stock solution into a 100 ml volumetric flask and dilute to volume with methanol This represents 10 µg/ml Bayleton equivalents of the appropriate standard Pipet 2 5 ml of the appropriate 10 µg/ml

standard into a 25 ml volumetric flask and dilute to volume with methanol This represents 1 µg/ml Bayleton equivalents of the appropriate standard

1 0 ml of the appropriate 1 µg/ml standard represents 0 01 ppm Bayleton equivalents in milk (100 gm)

0 5 ml of the appropriate 1 µg/ml standard represents 0 005 ppm Bayleton equivalents in milk (100 gm)

3 Internal Standard

3 4 dichlorophenol 1 mg/ml Dissolve 10 mg 3 4 dichlorophenol in acetone and dilute to volume in a 10 ml volumetric flask Pipet 1 ml of the 1 mg/ml internal standard stock solution into a 250 ml volumetric flask and dilute to volume with acetone This represents a 4 µg/ml solution

C Glassware Handling

Glassware is washed in Alco jet in a mechanical dishwasher After normal rinsing and a D I rinse glassware is dried with technical grade acetone Immediately prior to use glassware is rinsed with nanograde acetone Rotovap stems are also rinsed with acetone prior to use Sulfuric acid dichromate cleaning is sometimes necessary to remove baked on residue in hydrolysis flasks

CONFIDENTIAL

PROPERTY OF

MOBAY CHEMICAL CORPORATION
AGRICULTURAL CHEMICALS DIVISION

ANALYTICAL DEVELOPMENT CORPORATION

By _____
Joan F Kruplak
Research Scientist

& _____
Barbara Weissenburger
Senior Research Technician

Approved by _____
George O Breault Ph D
Section Manager R&D

JFK/ge

CONFIDENTIAL

PROPERTY OF

MOBAY CHEMICAL CORPORATION
AGRICULTURAL CHEMICALS DIVISION

69531

A P P E N D I X I

PRIMARY QUANTITATION (IONS 127 AND 161) OF BAYLETON AND METABOLITES IN BOVINE TISSUES AND MILK

(INCLUDING QUANTITATION OF METABOLISM LIVER AND KIDNEY SAMPLES PROVIDED BY MOBAY)

CONFIDENTIAL

PROPERTY OF

MOBAY CHEMICAL CORPORATION
AGRICULTURAL CHEMICALS DIVISION

CONFIDENTIAL

PROPERTY OF

MOBAY CHEMICAL CORPORATION
AGRICULTURAL CHEMICALS DIVISION

MOBAY CHEMICAL CORPORATION AGRICULTURAL DIVISION

I) t B yl t M talolit Io tificatior in Bovi e Liver Date M y 6, 1981

\ ly I ly A lyti I D v lop nt Corl rition

				Peak R ponse															
				Sample								Oppi St l							
				Analyte			Internal Stand rd					Analyte			Internal Stand rd				
	S pl	Compo d Alll	Il Add d (B yl t) (pp l t)	Base ( )	Hit ( )	Area (²)	Base ( )	Hit ( )	Area ( )	Ratio	Base ( )	Hit ( )	Area (m²)	Base ( )	Hit ( )	Area ( )	Ratio	Nt Rll (ll)	Recovery
Il	Control			10 0	3 0	15 0	12 0	75 5	453 0	0 03	8 0	61 0	244 0	11 0	42 0	2 1 0	1 06	0 010	
Il	Control	Bylt)	0 10	8 0	67 5	270 0	11 5	47 5	273 1	0 99	8 0	70 0	280 0	12 0	47 5	285 0	0 98	0 098	98
Il	Control	Bylt)	0 05	8 5	51 0	216 8	12 0	71 0	426 0	0 51	8 0	70 0	280 0	12 0	47 5	285 0	0 98	0 040	98
I	Control	KWG 0519	0 10	9 0	34 0	153 0	12 5	26 5	1c5 6	0 92	8 0	64 5	258 0	12 0	4 5	255 0	1 01	0 098	88
I	Control	KWG 0519	0 05	9 5	30 5	187 6	11 5	74 5	428 4	0 44	8 0	64 5	258 0	12 0	4 5	255 0	1 01	0 041	82
Il	Control	KWG 1640	0 10	9 0	59 0	265 5	12 0	55 5	333 0	0 80	8 0	72 0	288 0	13 0	50 5	328 2	0 88	0 088	88
Il	Control	KWC 1640	0 05	8 5	43 5	184 9	12 0	78 5	471 0	0 39	8 0	72 0	288 0	13 0	50 5	328 2	0 88	0 041	8
Il	Control	KWG 1342	0 10	8 5	60 0	293 2	12 0	55 5	333 0	0 88	8 0	73 5	294 0	12 0	52 5	315 0	0 93	0 092	9
Iiv	Control	KWC 1342	0 05	8 5	51 5	218 9	12 0	79 5	477 0	0 46	8 0	73 5	294 0	12 0	52 5	315 0	0 93	0 046	92
Il	Control	KWG 1323	0 10	9 0	67 5	303 8	12 5	51 5	321 9	0 94	8 0	74 0	296 0	1 0	54 5	327 0	0 91	0 100	100
I v	Control	KWG 1323	0 05	8 5	44 0	187 0	12 5	73 0	456 2	0 41	8 0	74 0	296 0	12 0	54 5	327 0	0 91	0 04	81
R	t			0 0	0 0	0 0	15 0	84 0	630 0	0 00	9 5	63 0	299 3	13 0	41 0	266 5	1 12	0 010	

69531

CONFIDENTIAL
PROPERTY OF
MOBAY CHEMICAL CORPORATION
AGRICULTURAL CHEMICALS DIVISION

MOBAY CHEMICAL CORPORATION AGRICULTURAL DIVISION

R [illegible] Butylate and Metabolite Fortifications in Bovine Kidney Date May 6, 1981

Analyst Analytical Development Corporation

Sample	Compound Added	Level Added (Butylate Equivalent)	Peak Response: Sample Analyte Base (mm)	Analyte Ht (mm)	Analyte Area (mm)	Internal Standard Base (mm)	Internal Standard Ht (mm)	Internal Standard Area (mm)	Ratio	0.1 ppm Standard Analyte Base (mm)	Analyte Ht (mm)	Analyte Area (mm²)	Internal Standard Base (mm)	Internal Standard Ht (mm)	Internal Standard Area (mm²)	Ratio	Net Reading (ppm)	% Recovery
Kidney Control		0.0	0.0	0.0	11.5	55.0	316.2	0.00	7.5	67.5	253.1	12.0	46.0	276.0	0.92	0.010	
Kidney Total	Butylate	0.10	9.5	63.0	209.3	12.5	40.0	250.0	1.20	8.5	72.0	306.0	11.5	49.0	81.8	1.09	0.110	110
Kidney Conj.	Butylate	0.05	12.0	24.0	144.0	13.0	34.0	221.0	0.65	8.5	72.0	306.0	11.5	49.0	281.8	1.09	0.060	120
Kidney Control	EWC 0519	0.10	10.0	57.0	285.0	11.5	39.0	224.3	1.27	9.0	72.0	324.0	11.0	48.0	264.0	1.23	0.103	103
Kidney Conj.	EWC 0519	0.05	14.0	27.5	132.5	12.0	53.0	318.0	0.60	9.0	72.0	324.0	11.0	48.0	264.0	1.23	0.049	98
Kidney Total	EWC 1610	0.10	14.0	40.0	327.0	11.5	45.0	58.8	1.4	8.5	72.0	306.0	11.0	47.0	258.5	1.18	0.105	105
Kidney Conj.	EWC 1610	0.05	12.0	44.5	267.0	12.0	71.0	426.0	0.63	8.5	72.5	308.1	12.0	40.0	276.0	1.12	0.056	112
Kidney Total	EWC 1512	0.10	8.5	7.0	06.0	11.5	54.5	313.4	0.96	7.5	72.0	270.0	11.5	51.5	230.1	0.91	0.108	108
Kidney Conj.	EWC 154	0.05	11.0	42.0	231.0	12.0	74.5	447.0	0.52	7.5	72.0	270.0	11.5	51.5	296.1	0.91	0.057	114
Kidney Control	EWC 13.3	0.10	8.0	61.0	256.0	1.0	40.0	10.0	1.07	8.5	71.0	301.8	12.0	47.0	82.0	1.07	0.100	100
Kidney Conj.	EWC 13.3	0.0	13.0	2.0	208.0	12.0	51.0	324.0	0.64	8.5	71.0	301.8	12.0	47.0	282.0	1.07	0.000	1.0
Rest			0.0	0.0	0.0	12.0	00.0	540.0	0.00	8.0	75.0	300.0	11.5	48.5	278.3	1.08	0.010	

695531

CONFIDENTIAL

PROPERTY OF

MOBAY CHEMICAL CORPORATION
AGRICULTURAL CHEMICALS DIVISION

MOBAY CHEMICAL CORPORATION AGRICULTURAL DIVISION

Recovery of Bayleton and Metabolite Fortification in Bovine Muscle Date May 6, 1981

Analyzed by Analytical Development Corporation

Sample	Compound Applied	Amount Added (Bayleton Equivalents)	Peak Response: Sample Analyte Base (mm)	Analyte Ht (mm)	Analyte Area (mm²)	Internal Standard Base (mm)	Internal Standard Ht (mm)	Internal Standard Area (mm²)	Ratio	0.1 ppm Standard Analyte Base (mm)	Analyte Ht (mm)	Analyte Area (mm²)	Internal Standard Base (mm)	Internal Standard Ht (mm)	Internal Standard Area (mm²)	Ratio	Net Reading (ppm)	% Recovery
Mk 1 Control			10.0	5.5	27.5	16.5	79.0	651.8	0.04	11.5	63.0	362.3	14.5	39.0	282.8	1.28	0.010	
Mk 1 Control	Bayleton	0.10	9.5	70.0	332.5	12.0	52.0	312.0	1.07	9.0	62.0	279.0	13.0	36.5	237.3	1.18	0.088	88
Mk 1 Control	Bayleton	0.05	9.0	55.0	247.5	12.5	87.5	546.9	0.45	9.0	64.0	288.0	12.5	43.0	268.8	1.07	0.039	78
Mk 1 Control	KWG 0519	0.10	8.5	76.0	323.0	11.5	60.0	345.0	0.94	9.0	64.0	288.0	12.5	43.0	268.8	1.07	0.085	8
Mk 1 Control	KWG 0519	0.05	11.5	55.0	316.3	12.0	85.0	510.0	0.62	9.5	63.0	299.3	13.0	37.0	240.5	1.24	0.047	94
Mk 1 Control	KWG 1040	0.10	10.0	65.0	25.0	1.0	50.5	303.0	1.07	9.5	63.0	293.3	13.0	37.0	210.5	1.24	0.083	83
Mk 1 Control	KWG 1040	0.05	10.0	50.0	250.0	11.5	36.0	552.0	0.45	9.5	62.5	296.9	13.0	44.0	286.0	1.04	0.040	80
Mk 1 Control	KWG 1342	0.10	10.5	61.0	320.3	12.5	44.0	275.0	1.16	9.5	58.0	275.5	13.0	37.0	240.5	1.15	0.036	38
Mk 1 Control	KWG 1342	0.05	11.5	45.0	258.6	12.0	67.5	405.0	0.64	9.0	63.0	283.5	12.5	40.0	250.0	1.13	0.054	108
Mk 1 Control	KWG 1323	0.10	10.5	53.0	309.8	1.0	4.0	252.0	1.23	9.0	63.0	283.5	12.5	40.0	250.0	1.13	0.106	106
Mk 1 Control	KWG 1323	0.05	10.5	44.5	233.6	12.5	65.0	406.3	0.57	9.5	59.0	80.3	12.5	39.0	243.8	1.15	0.047	94
Reject			10.0	3.0	15.0	1.5	91.0	587.5	0.03	9.5	59.0	280.3	12.5	39.0	243.8	1.15	0.010	

69531

CONFIDENTIAL

PROPERTY OF

MOBAY CHEMICAL CORPORATION
AGRICULTURAL CHEMICALS DIVISION

MOBAY CHEMICAL CORPORATION AGRICULTURAL DIVISION

R o y of Bayl t and M tabolit Fortification in Bovine Fat Date May 6, 1981

A lyz l by Analytical Dev lop ent Corporation

Sample	Compound Added	Ppm Added (Bayl t Equivalent)	Peak Response: Sample, Analyte, Base (mm)	Sample, Analyte, Ht (mm)	Sample, Analyte, Area (mm)	Sample, Internal Standard, Base (mm)	Sample, Internal Standard, Ht (mm)	Sample, Internal Standard, Area (mm)	Sample, Ratio	0.1 ppm Standard, Analyte, Base (mm)	0.1 ppm Standard, Analyte, Ht (mm)	0.1 ppm Standard, Analyte, Area (mm²)	0.1 ppm Standard, Internal Standard, Base (mm)	0.1 ppm Standard, Internal Standard, Ht (mm)	0.1 ppm Standard, Internal Standard, Area (mm)	0.1 ppm Standard, Ratio	Net Residue (ppm)	% Recovery
Ft C t l			0 0	0 0	0 0	16 5	67 0	552 8	0 00	10 0	74 5	37 5	15 5	22 5	171 4	2 14	0 010	
Ft C t l	Bayl t	0 10	10 0	7 0	60 0	14 0	33 5	234 5	1 54	8 0	77 5	310 0	15 0	24 0	180 0	1 72	0 090	90
Ft C t ol	Bayl ton	0 05	10 0	8 5	292 5	15 0	17 0	352 5	0 83	8 0	77 5	310 0	15 0	24 0	180 0	1 72	0 048	96
Ft C t l	KWG 0519	0 10	10 0	6 5	412 5	11 0	31 5	220 5	1 87	9 0	76 0	342 0	15 0	4 5	183 8	1 86	0 100	100
Ft C ntr l	KWG 0519	0 05	9 0	60 0	270 0	14 0	10 0	280 0	0 96	9 0	76 0	34 0	15 0	24 5	183 8	1 86	0 052	104
Ft C t l	KWG 1640	0 10	10 5	6 0	3 1 6	14 0	39 0	273 0	1 29	9 0	76 0	342 0	16 0	27 0	216 0	1 58	0 06	8
Ft C t l	KWG 1640	0 05	10 0	33 0	165 0	13 0	37 5	243 8	0 68	9 0	76 0	342 0	16 0	27 0	216 0	1 58	0 043	86
Ft C t l	KWG 131	0 10	9 0	79 0	355 5	14 0	22 0	154 0	2 1	9 5	78 0	370 5	14 0	4 0	168 0	2 21	0 105	105
Ft C ntrol	KWG 134	0 05	9 5	68 0	323 0	14 5	49 0	355	0 91	9 5	78 0	370 5	14 0	24 0	168 0	2 21	0 041	8
Ft C t l	KWG 13 3	0 10	9 0	7 0	3 4 0	14 0	31 5	0 5	1 47	6 0	8 5	330 0	14 0	26 5	185 5	1 78	0 083	8
Ft C t l	KWG 13 3	0 05	11 0	2 0	306 0	16 0	48 5	388 0	1 02	9 5	64 0	301 0	16 5	16 0	132 0	2 30	0 044	88
R g nt			0 0	0 0	0 0	11 0	73 0	511 0	0 00	9 0	80 5	362 2	16 0	25 0	200 0	1 81	0 010	

69531

CONFIDENTIAL

PROPERTY OF

MOBAY CHEMICAL CORPORATION
AGRICULTURAL CHEMICALS DIVISION

MOBAY CHEMICAL CORPORATION AGRICULTURAL DIVISION

Recovery of Bayleton and Metabolite Fortifications in Bovine Milk Date May 6, 1981

Analyzed by Analytical Development Corporation

Sample	Compound Added	Ppm Added (Bayleton Equivalent)	Peak Response: Sample Analyte Base (mm)	Sample Analyte Ht (mm)	Sample Analyte Area (mm²)	Sample Internal Standard Base (mm)	Sample Internal Standard Ht (mm)	Sample Internal Standard Area (mm²)	Sample Ratio	0.01 ppm Standard Analyte Base (mm)	0.01 ppm Standard Analyte Ht (mm)	0.01 ppm Standard Analyte Area (mm²)	0.01 ppm Standard Internal Standard Base (mm)	0.01 ppm Standard Internal Standard Ht (mm)	0.01 ppm Standard Internal Standard Area (mm²)	0.01 ppm Standard Ratio	Net Residue (ppm)	Recovery
Milk Control			0.0	0.0	0.0	13.0	86.0	553.0		8.0	82.0	328.0	11.5	55.0	316.3	1.04	0.0010	
Milk Control	Bayleton	0.010	15.0	53.0	442.5	12.5	78.0	487.5	0.91	8.0	77.5	310.0	12.0	57.5	345.0	0.90	0.0101	101
Milk Control	Bayleton	0.005	17.0	31.0	263.5	12.5	93.5	584.4	0.45	8.0	77.5	310.0	12.0	57.5	345.0	0.90	0.0050	100
Milk Control	KWC 0510	0.010	15.5	60.0	465.0	13.0	72.0	468.0	0.99	8.0	83.0	332.0	10.5	61.0	320.3	1.04	0.0095	95
Milk Control	KWC 0510	0.005	10.0	30.0	70.5	13.5	95.0	641.3	0.58	8.0	83.0	332.0	10.5	61.0	320.3	1.04	0.0056	11
Milk Control	KWC 1640	0.010	15.5	55.0	4[illegible]6.3	12.5	80.0	500.0	0.85	8.5	83.0	352.8	12.0	64.0	384.0	0.92	0.0092	92
Milk Control	KWC 1640	0.005	1.0	30.0	315.0	13.5	85.0	573.8	0.55	8.5	83.0	352.8	12.0	64.0	384.0	0.92	0.0060	120
Milk Control	KWC 134	0.010	1[illegible].0	6[illegible].0	372.0	12.0	68.0	408.0	0.91	8.0	79.0	316.0	11.5	62.0	356.5	0.89	0.0102	102
Milk Control	KWC 134	0.005	13.5	4[illegible].0	290.3	13.0	9[illegible].0	598.0	0.48	8.0	79.0	316.0	11.5	6[illegible].0	356.5	0.89	0.0054	108
Milk Control	KWC 13[illegible]3	0.010	11.5	60.0	345.0	13.0	51.0	331.5	1.04	8.0	88.0	35[illegible].0	12.0	55.0	330.0	1.07	0.0097	97
Milk Control	KWC 13[illegible]3	0.005	0.5	30.0	369.0	13.0	84.0	516.0	0.68	8.5	89.0	378.3	12.0	57.0	34[illegible].0	1.11	0.0061	122

69531

CONFIDENTIAL

PROPERTY OF

MOBAY CHEMICAL CORPORATION
AGRICULTURAL CHEMICALS DIVISION

MOBAY CHEMICAL CORPORATION AGRICULTURAL DIVISION

Analysis of Metabolism Liver and Kidney for Total Residues of Bayleton — Date May 6, 1981

Analyzed by Analytical Development Corporation

Sample	Wt Factor	Peak Response: Sample, Analyte, Base (mm)	Sample, Analyte, Ht (mm)	Sample, Analyte, Area (mm²)	Sample, Internal Standard, Base (mm)	Sample, Internal Standard, Ht (mm)	Sample, Internal Standard, Area (mm²)	Sample, Ratio	0.1 ppm Standard, Analyte, Base (mm)	0.1 ppm Standard, Analyte, Ht (mm)	0.1 ppm Standard, Analyte, Area (mm²)	0.1 ppm Standard, Internal Standard, Base (mm)	0.1 ppm Standard, Internal Standard, Ht (mm)	0.1 ppm Standard, Internal Standard, Area (mm²)	0.1 ppm Standard, Ratio	Net Residue (ppm)	% Recovery
5.0 g Metabolism Liver (1.0 ppm)	5.0	9.0	93.0	418.5	15.0	5.5	41.3	10.13 x 5 50.6	11.5	56.0	32.0	15.5	34.0	263.5	1.22	4.2	105
1.4 g Metabolism Kidney (1.0 ppm)	17.9	7.5	100.0	375.0	15.0	4.0	30.0	12.50 x 17.9 223.75	8.0	75.0	300.0	11.5	48.5	278.9	1.08	20.7	[illegible]

Recovery by [illegible] Kidney 70
Liver 77

5 g Liver sample [illegible] 1.0 ppm [illegible] (2.5 µg) 5.0

1.4 g Kidney sample [illegible] 1.0 ppm [illegible] (2.5 µg) 17.9

[illegible]

69531

69531

APPENDIX II

CONFIRMATORY QUANTITATION (IONS 294 AND 328) OF BAYLETON AND METABOLITES IN BOVINE TISSUES AND MILK

CONFIDENTIAL
PROPERTY OF
MOBAY CHEMICAL CORPORATION
AGRICULTURAL CHEMICALS DIVISION

CONFIDENTIAL

PROPERTY OF

MOBAY CHEMICAL CORPORATION
AGRICULTURAL CHEMICALS DIVISION

MOBAY CHEMICAL CORPORATION AGRICULTURAL DIVISION

R[illegible]y of B[illegible]y[illegible] [illegible]d M[illegible]t[illegible]olit[illegible] Fortifications in Bovine Liv[illegible]r (Confirm[illegible]tion) Date May 6, 1981

A[illegible]lyz[illegible]d by A[illegible]lyt[illegible]l Dev[illegible]lo[illegible]nt Corporation

			Peak Response															
			Sample							0.1 ppm Standard								
			Analyte			Internal Standard				Analyte			Internal Standard					
Sample	Compound Added	Added (Bylet[illegible]n Equivalent)	Base (mm)	Ht (mm)	Area (mm²)	Base (mm)	Ht (mm)	Area (mm²)	Ratio	Base (mm)	Ht (mm)	Area (mm²)	Base (mm)	Ht (mm)	Area (mm²)	Ratio	Net Residue (ppm)	% Recovery
Liv[illegible] C[illegible]t[illegible]ol			8.0	3.5	14.0	12.0	78.0	468.0	0.03	8.0	80.5	32[illegible].0	12.5	58.5	365.6	0.88	0.010	
Liv[illegible] C[illegible]t[illegible]l	B[illegible]yl[illegible]	0.10	8.0	8.0	332.0	12.0	70.0	4[illegible]0.0	0.79	8.0	87.0	348.0	12.0	63.0	37[illegible].0	0.[illegible]	0.083	83
Liv[illegible] C[illegible]t[illegible]l	B[illegible]l[illegible]	0.05	8.0	54.5	218.0	13.0	77.0	500.5	0.44	8.0	87.0	348.0	1[illegible].0	[illegible].0	378.0	0.[illegible]2	0.015	[illegible]0

69531

CONFIDENTIAL

PROPERTY OF

MOBAY CHEMICAL CORPORATION
AGRICULTURAL CHEMICALS DIVISION

MOBAY CHEMICAL CORPORATION AGRICULTURAL DIVISION

Recovery of Bayleton and Metabolite Fortifications in Bovine Kidney (Confirmation) Date May 6, 1981

Analyzed by Analytical Development Corporation

Sample	Compound Added	ppm Added (Bayleton Equivalent)	Peak Response: Sample: Analyte Base (mm)	Analyte Ht (mm)	Analyte Area (mm²)	Internal Standard Base (mm)	Internal Standard Ht (mm)	Internal Standard Area (mm²)	Ratio	0.1 ppm Standard: Analyte Base (mm)	Analyte Ht (mm)	Analyte Area (mm²)	Internal Standard Base (mm)	Internal Standard Ht (mm)	Internal Standard Area (mm²)	Ratio	Net Residue (ppm)	% Recovery
Kidney Control			7.5	3.5	13.1	12.5	85.0	531.3	0.02	8.5	82.0	348.5	12.0	64.0	384.0	0.91	0.010	
Kidney Control	Bayleton	0.10	7.5	90.0	337.5	12.5	57.0	325.0	1.04	8.5	82.0	348.5	12.0	64.0	384.0	0.91	0.112	112
Kidney Control	Bayleton	0.05	8.0	70.0	280.0	12.0	91.0	546.0	0.51	8.5	85.0	361.3	11.5	65.0	373.8	0.97	0.051	102

69531

CONFIDENTIAL

PROPERTY OF

MOBAY CHEMICAL CORPORATION
AGRICULTURAL CHEMICALS DIVISION

MOBAY CHEMICAL CORPORATION AGRICULTURAL DIVISION

Recovery of Bayleton and Metabolite Fortifications in Bovine Muscle (Confirmation) Date May 6, 1981

Analyzed by Analytical Development Corporation

Sample	Compound Added	Ppm Added (Bayleton Equivalent)	Peak Response: Sample, Analyte, Base (mm)	Sample, Analyte, Ht (mm)	Sample, Analyte, Area (mm)	Sample, Internal Standard, Base (mm)	Sample, Internal Standard, Ht (mm)	Sample, Internal Standard, Area (mm)	Sample, Ratio	0.1 ppm Standard, Analyte, Base (mm)	0.1 ppm Standard, Analyte, Ht (mm)	0.1 ppm Standard, Analyte, Area (mm)	0.1 ppm Standard, Internal Standard, Base (mm)	0.1 ppm Standard, Internal Standard, Ht (mm)	0.1 ppm Standard, Internal Standard, Area (mm)	0.1 ppm Standard, Ratio	Net Recd (ppm)	% Recovery
Mk 1 Control			5.0	1.5	3.8	16.5	69.0	563.3	0.01	11.0	82.0	451.0	16.0	50.0	400.0	1.13	0.010	
Mk 1 Control	Bayleton	0.10	8.5	86.0	365.5	12.5	73.0	493.8	0.74	8.0	84.0	336.0	12.0	70.0	4[illegible]0.0	0.80	0.091	91
Mk 1 Control	Bayleton	0.05	8.5	14.0	187.0	12.5	93.0	581.3	0.32	8.0	85.0	340.0	12.0	74.0	141.0	0.77	0.041	8

69531

CONFIDENTIAL

PROPERTY OF

MOBAY CHEMICAL CORPORATION
AGRICULTURAL CHEMICALS DIVISION

MOBAY CHEMICAL CORPORATION AGRICULTURAL DIVISION

Recovery of Bayleton and Metabolite Fortifications in Bovine Fat (Confirmation) Date May 6, 1981

Analyzed by Analytical Development Corporation

			Peak Response															
			Sample							0.1 ppm Standard								
			Analyte			Internal Standard				Analyte			Internal Standard					
[illegible]	Compound Added	Fat Added (Bayleton)	Base (mm)	Ht (mm)	Area (mm²)	Base (mm)	Ht (mm)	Area (mm²)	Ratio	Base (mm)	Ht (mm)	Area (mm²)	Base (mm)	Ht (mm)	Area (mm²)	Ratio	Net Residue (ppm)	% Recovery
Fat Control			0.0	0.0	0.0	17.0	81.0	688.5	0.00	11.0	78.5	431.8	19.0	6.0	247.0	1.75	0.010	
Fat Control	Bayleton	0.10	11.0	77.0	423.5	13.0	45.0	292.5	1.45	11.0	78.5	431.8	19.0	26.0	47.0	1.75	0.083	83
Fat Control	Bayleton	0.05	11.0	72.0	306.0	18.0	71.5	643.5	0.62	11.0	80.5	442.8	20.0	33.0	330.0	1.34	0.016	92

69531

CONFIDENTIAL
PROPERTY OF
MOBAY CHEMICAL CORPORATION
AGRICULTURAL CHEMICALS DIVISION

MOBAY CHEMICAL CORPORATION AGRICULTURAL DIVISION

Recovery of Bayleton and Metabolite Fortifications in Bovine Milk (Confirmation) Date May 6, 1981

Analyst(s) Analytical Development Corporation

Sample	Compound Added	Ppm Added (Bayleton Equivalent)	Peak Response: Sample Analyte Base (mm)	Analyte Ht (mm)	Analyte Area	Internal Standard Base (mm)	Internal Standard Ht (mm)	Internal Standard Area	Ratio	0.01 ppm Standard Analyte Base (mm)	Analyte Ht (mm)	Analyte Area (mm²)	Internal Standard Base (mm)	Internal Standard Ht (mm)	Internal Standard Area (mm²)	Ratio	Net Residue (ppm)	Recovery
Milk Control			8.0	0	8.0	11.5	83.0	601.8	0.01	8.5	81.0	344.3	12.5	65.0	406.3	0.85	0.0010	
Milk Control	Bayleton	0.010	9.5	63.0	327.8	13.0	7.0	468.0	0.70	8.5	77.0	373.1	10.0	68.0	408.0	0.80	0.0087	87
Milk Control	Bayleton	0.005	9.5	37.0	175.8	11.5	70.0	507.5	0.35	9.0	88.0	336.0	14.0	83.0	625.0	0.64	0.0054	108

69531

69531

A P P E N D I X III

QUANTITATION OF OVERSPIKES OF HYDROLYZED AND DERIVATIZED BAYLETON ADDED INCREMENTALLY TO BOVINE TISSUE AND MILK CONTROLS PRIOR TO INJECTION

CONFIDENTIAL

PROPERTY OF

MOBAY CHEMICAL CORPORATION
AGRICULTURAL CHEMICALS DIVISION

CONFIDENTIAL
PROPERTY OF
MOBAY CHEMICAL CORPORATION
AGRICULTURAL CHEMICALS DIVISION

MOBAY CHEMICAL CORPORATION AGRICULTURAL DIVISION

R[illegible]ry of [illegible] Date May 6, 1981

[illegible] Analytical Development Corporation

				Peak Response															
				Sample							0.1 ppm Standard								
				Analyte			Internal Standard				Analyte			Internal Standard					
[illegible]	Compound Added	ppm Added (Bayleton)	Base (mm)	Ht (mm)	Area (mm²)	Base (mm)	Ht (mm)	Area (mm²)	Ratio	Base (mm)	Ht (mm)	Area (mm²)	Base (mm)	Ht (mm)	Area (mm²)	Ratio	Net Recovered (ppm)	Recovery
[illegible]	Bayleton	0.01	7.5	19.0	71.2	13.5	77.0	519.8	0.14	6.0	82.5	330.0	11.0	60.0	330.0	1.00	0.011	110
[illegible]	Bayleton	0.0	8.5	6.5	11.6	14.0	82.0	574.0	0.20	8.0	82.0	3[illegible]8.0	12.0	54.0	324.0	1.01	0.017	85
[illegible]	Bayleton	0.03	8.0	52.0	208.0	12.0	82.0	492.0	0.4	8.0	82.0	328.0	1[illegible]0	51.0	324.0	1.01	0.039	130
[illegible]	Bayleton	0.04	7.5	59.0	221.2	12.5	67.0	418.8	0.53	8.0	83.0	332.0	11.0	61.0	35.5	0.99	0.051	128

[illegible] liver control [illegible] of hydrolyzed and derivatized Bayleton after initial GC/MS quantitation

[illegible] liver control [illegible] of 0.003 ppm

69531

CONFIDENTIAL

PROPERTY OF

MOBAY CHEMICAL CORPORATION
AGRICULTURAL CHEMICALS DIVISION

MOBAY CHEMICAL CORPORATION AGRICULTURAL DIVISION

Recovery of Overspike in Bovine Kidney Added at GC* Date May 6, 1981

Analyzed by Analytical Development Corporation

Sample	Compound Added	ppm Added (Bayleton Equivalent)	Peak Response: Sample, Analyte, Base (mm)	Sample, Analyte, Ht (mm)	Sample, Analyte, Area (mm²)	Sample, Internal Standard, Base (mm)	Sample, Internal Standard, Ht (mm)	Sample, Internal Standard, Area (mm²)	Sample, Ratio	0.1 ppm Standard, Analyte, Base (mm)	0.1 ppm Standard, Analyte, Ht (mm)	0.1 ppm Standard, Analyte, Area (mm²)	0.1 ppm Standard, Internal Standard, Base (mm)	0.1 ppm Standard, Internal Standard, Ht (mm)	0.1 ppm Standard, Internal Standard, Area (mm²)	0.1 ppm Standard, Ratio	Net Residue (ppm)	% Recovery
Kidney Control	Bayleton	0.01	10.0	9.5	47.5	14.0	49.0	343.0	0.14	9.0	51.0	29.5	12.5	35.0	218.8	1.05	0.013	130
Kidney Control	Bayleton	0.02	11.0	22.0	121.0	14.0	53.0	371.0	0.33	10.0	62.0	310.0	12.5	43.0	268.8	1.15	0.029	145
Kidney Control	Bayleton	0.03	9.0	34.0	153.0	13.5	51.0	344.3	0.44	10.0	62.0	310.0	12.5	43.0	268.8	1.15	0.038	127
Kidney Control	Bayleton	0.04	9.0	50.0	225.0	13.5	51.0	344.3	0.65	9.0	73.0	328.5	11.0	54.0	97.0	1.11	0.059	148

*Kidney control was overspiked with increasing amount of hydrolyzed and derivatized Bayleton after initial GC/MS quantitation

69531

-87-

CONFIDENTIAL

PROPERTY OF

MOBAY CHEMICAL CORPORATION
AGRICULTURAL CHEMICALS DIVISION

MOBAY CHEMICAL CORPORATION AGRICULTURAL DIVISION

Study of Overpeak II Bovine Muscle Added Set GC Date May 6, 1981

Analyzed by Analytical Development Corporation

			Peak Response															
			Sample							0.1 ppm Standard								
			Analyte			Internal Standard				Analyte			Internal Standard				Net	
Sample	Compound Added	ppm Added (Byproduct)	Base (in)	Ht (in)	Area (in^2)	Base (in)	Ht (mm)	Area (mm^2)	Ratio	Base (mm)	Ht (mm)	Area (mm^2)	Base (mm)	Ht (mm)	Area (mm^2)	Ratio	Recovered (ppm)	Recovery
Matrix Blank	Byproduct	0.01	1.5	14.0	87.5	20.0	55.5	555.0	0.16	13.0	62.5	406	10.0	44.5	356.0	1.14	0.011	110
Matrix Control	Byproduct	0.0	13.0	19.5	126.8	16.0	65.5	540	0.24	11.5	61.5	353.6	16.0	41.5	332.0	1.06	0.0.0	100
Matrix Blank	Byproduct	0.03	13.5	6.5	178.3	16.0	71.0	68.0	0.51	11.5	62.0	356.5	16.0	44.0	352.0	1.01	0.028	93
Matrix Control	Byproduct	0.04	12.5	35.0	218.8	10.0	72.0	576.0	0.38	11.5	62.0	356.5	16.0	44.0	35.0	1.01	0.035	88

The limit of detection with a target amount of Byproduct analyzed by Confirmatory Analytical GC/MS Confirmation (Detection Limit) of 0.003 ppm

-29-

69531

CONFIDENTIAL

PROPERTY OF

MOBAY CHEMICAL CORPORATION
AGRICULTURAL CHEMICALS DIVISION

MOBAY CHEMICAL CORPORATION AGRICULTURAL DIVISION

R v ry of Ov r pik in Bovine Fat Added at GC* Date May 6, 1981

Analy d by Analytical D v lop ent Corporation

			Peak Response															
			Sample							0 1 ppm Standard								
			Analyte			Internal Standard				Analyte			Internal Standard					
S pl	Compound Add l	ppm Added (Byleton Equivalent)	Base (mm)	Ht (mm)	Area (mm)	Base (mm)	Ht (mm)	Area (mm²)	Ratio	Base (m)	Ht (mm)	Area (mm²)	Base (mm)	Ht (m)	Area (mm²)	Ratio	Net Re id e (ppm)	% Recovery
I t C ti l	B yl t	0 01	12 0	3 0	138 0	17 0	57 0	484 5	0 8	10 0	77 0	385 0	15 0	2 0	172 5	2 23	0 012	120
I t C nt ol	B yl t n	0 0	11 0	39 0	14 5	16 0	51 5	412 0	0 52	10 0	79 0	395 0	14 0	25 0	175 0	2 26	0 023	115
I t C t l	B yl t n	0 0	11 0	48 5	266 8	16 0	38 5	308 0	0 67	10 0	79 0	395 0	14 0	25 0	175 0	2 26	0 058	127
I t C t l	B yleto	0 01	10 5	56 0	294 0	17 0	5	276 2	1 06	11 0	80 0	440 0	15 5	25 5	197 6	2 3	0 048	1 0

H I t C ntrol r pik d ith in rea ing amounts of hyl oly ed nl d riv tized B ylet n after initial GC/MS quantitation

69531

CONFIDENTIAL

PROPERTY OF

MOBAY CHEMICAL CORPORATION
AGRICULTURAL CHEMICALS DIVISION

MOBAY CHEMICAL CORPORATION AGRICULTURAL DIVISION

R y of O ilk s i Bovine Milk Added at CC Dat M y 6, 1981

\ ly il) A lyt l Dev l it Corpor tion

leak Re pon e

S l	Compound Add	Added (Bylt n Inv lv r)	Sample Analyte Base (n)	Analyte Ht (n)	Analyte Area ( )	Int rn l Standard Ba (m)	Int rn l Standard Ht (mm)	Int rn l Standard Area (m)	Ratio	0 01 l i St ndard Analyte Ba e (nn)	Analyte Ht (n)	Analyte Area (nnn)	Int rnal Stnd rd Base (nnn)	Int rnal Stnd rd Ht (mm)	Int rnal Stnd rd Ar a (mm²)	Ratio	Not Re id (ppm)	% Recov ry
Milk (t l	Bylt	0 001	15 0	7 0	5 5	11 0	90 0	630 0	0 08	J 5	J2 0	437 0	1 5	73 0	456	0 J6	0 0008	80
Milk (trol	Bylto	0 00	18 0	17 0	153 0	14 0	86 0	602 0	0 25	9 5	93 0	441 8	13 5	73 5	496 1	0 89	0 0028	140
Milk (t l	Bylcto	0 005	14 0	34 0	38 0	16 0	76 0	608 0	0 3J	9 5	93 0	441 8	13 5	73 5	496 1	0 89	0 0041	147
Milk (t l	Bylt	0 001	1 0	51 0	324 0	15 5	75 0	581 3	0 56	10 0	86 0	440 0	12 0	75 0	450 0	0 J8	0 0057	11

H lk tr l ilk l tl r t ng uno t thylcoly l l l iv ti ed Bylt r fter initi l G/MS p itiviti

69531

69531

APPENDIX IV

INTERPRETATION OF GC/MS PRINTOUTS GENERATED THROUGH SELECTED ION MONITORING PROGRAM

CONFIDENTIAL

PROPERTY OF

MOBAY CHEMICAL CORPORATION
AGRICULTURAL CHEMICALS DIVISION

INTERPRETATION OF GC/MS PRINTOUTS GENERATED THROUGH SELECTED ION MONITORING PROGRAM

Quantitation of total Bayleton residues is made by injection of the DNFB derivative of hydrolyzed residues on a 5% Dexsil column installed in an H P 5992 A GC/MS During compound elution data is accumulated and stored by Selected Ion Monitoring (SIM) software provided with this system The scan in Figure 1 is a result of the computer processing of data stored after injection of a 0 1 ppm standard

Line by Line Interpretation of Printout

Line A Sample identity is listed initially This number refers to the analysis number assigned to the sample in the particular set at the onset of the procedure and is recorded in the analysis notebook The date printed refers to the date of sample injection

Line B The software prints out those ion masses which the analyst has decided to monitor for quantitation purposes

Line C Line C lists the number of milliseconds during which the signal of each ion will be monitored In this run during the GC elution of the sample the mass spectrometer monitored each pre selected ion 400 milliseconds As compound peaks elute the total cycle time of 800 milliseconds results in an adequate number of monitoring points to provide good precision for area data acquisition

Example The analyte peak width is approximately 30 seconds A total cycle time of 800 milliseconds results in each of the ions being monitored a total of approximately 38 times during elution of a GC peak

$$\frac{30 \text{ seconds}}{8 \text{ seconds/cycle}} = 38 \text{ cycles}$$

Line D At this point the ion data processor prints out the maximum abundances detected of each ion monitored throughout the GC elution of the sample The numbers assigned to the abundances are in arbitrary units interrelating ion currents and mass spectrometer voltage settings maximized daily in autotune of the instrument As daily autotune settings differ the absolute numerical values of the abundance units cannot be correlated between runs on different days

CONFIDENTIAL

PROPERTY OF

MOBAY CHEMICAL CORPORATION
AGRICULTURAL CHEMICALS DIVISION

CONFIDENTIAL
PROPERTY OF 69531
MOBAY CHEMICAL CORPORATION
AGRICULTURAL CHEMICALS DIVISION

Line E The run number is indicative of the order in which the samples were injected This particular run kept the data acquiring electronics of the mass spectrometer on for 6 4 minutes post injection The injection volume of 6 00 µl is also noted

At this point in the printout the ion processor prints a separate scan of each ion which was monitored (ions 127 and 161 in this example) throughout the GC elution of the sample During data acquisition the abundances monitored for each ion are independent of one another

In the ion scan retention time hatch marks are printed at the far left in 1 minute intervals beginning when the electronics of the spectrometer were turned on for data acquisition (user specified) For the run in Figure 1 the electronics were turned on 2 3 minutes post injection This helps keep the mass spectrometer clean

The dark trace to the left of each individual ion scan represents a scale factor of one tenth the light trace The light trace is always used for measurement purposes This trace is prevented from going off scale by an overscale option

Another option allows all ion traces to be set to the same scale factor which is determined by the ion with the highest signal level detected throughout the scan With the above mentioned overscale option this scale is determined by the tallest peak detected throughout elution being set exactly full scale All other peaks are printed on this scale to represent their abundances relative to this largest peak

The maximum amount of analyte detectable without dilution is only dependent on keeping the internal standard measurable when it is printed on the large scale set by the analyte peak (see Figure 2) Based on keeping the height of the internal standard twice the baseline (criteria for minimum detectable peak) this limit appears to be approximately 3 ppm based on a 25 gm sample It can be adjusted upwards (assuming linearity) by dilution of sample with additional internal standard solution (to maintain a consistent µg/ml concentration of internal standard as well as its peak height)

The minimum amount of analyte detectable is dependent on the same scale effects as well as background factors With small analyte levels all peaks will be set to a scale dependent on the maximum abundance of the internal standard usually the tallest peak in a low abundance analyte scan Figure 3 represents an average matrix control or reagent scan Based on keeping the

CONFIDENTIAL

PROPERTY OF

MOBAY CHEMICAL CORPORATION
AGRICULTURAL CHEMICALS DIVISION

height of the analyte peak at twice the baseline (the criteria for minimum detection) the detectable limit is to be approximately 0 001 ppm based on a 25 gm sample By concentration of the injection solution and increase in original sample size, this limit is approximately 0 0002 ppm in milk With a consistent predetermined level of internal standard being added this limit could be adjusted downward somewhat by additional concentration However with concentration the 127 ion background increases which also limits the minimum abundance detectable for the analyte in the same manner as on a GC equipped with a conventional detector

As has been discussed, the effects of the scale factors on all other peaks relative to the peak of maximum abundance do influence the minimum and maximum detectable levels of analyte However the actual numerical value of the scale response is inconsequential for quantitation purposes [1] The numerical value of the full scale response varies daily as well as from injection to injection Its value is determined by the instrument sensitivity and ion abundance as well as the amount of sample which actually crosses the membrane separator

The utility of the internal standard is apparent when considering the differences in full scale response from sample to sample Use of an internal standard circumvents any inconsistencies when different amounts of sample diffuse through the membrane separator When a small amount of analyte crosses the membrane a small amount of internal standard crosses the membrane In the same manner the use of ratios when comparing sample to standard for quantitation purposes effectively normalizes all response scales even though they are different from sample to sample

For quantitation purposes, area calculations are used Calculation by peak height ratio is unacceptable due to apparent matrix effects on analyte diffusion through the GC/MS membrane separator resulting in a broader and shorter analyte peak in matrix samples than in the reagent standard Calculation of a peak height ratio between analyte and internal standard does not circumvent the problem as the broadening and shortening effect of the matrix is not as apparent on the internal standard peak The matrix effects are taken into account using area calculations as a drop in peak height is counterbalanced by an increase in peak width and vice versa

---

[1] Refer to Figure 4 At the higher masses of 294 and 328 the instrument background is appreciably lower The percent relative abundance of analyte parent ion 294 and internal standard parent ion 328 is also low resulting in low full scale response However the sizes of the resultant peaks remain comparable to those generated during monitoring of the more abundant 127 and 161 ions

The 5992 A GC/MS system is equipped with an integrator but is capable of proper integration only when peaks begin and end at baseline Integration of peaks occurring on a slope as the analyte peak does (particularly in matrix) results in extremely low integration and renders proper quantitation impossible Area calculations are therefore done by hand using the following equation

$$\frac{\text{base of peak (mm)} \times \text{height of peak (mm)}}{2}$$

Sample injection sequence follows the order of standard, 2 samples standard etc Samples are quantitated against the standard of closest proximity Area ratios (area analyte - area internal standard) are calculated for both the sample and standard The ppm value of the sample is then calculated using the following equation

$$\frac{\text{area ratio sample} \times \text{ppm level of standard}}{\text{area ratio of standard}} = \text{ppm level of sample}$$

CONFIDENTIAL

PROPERTY OF

MOBAY CHEMICAL CORPORATION
AGRICULTURAL CHEMICALS DIVISION

69531

FIGURE 1

Sample & No _____ NBR 1 1 2 79

0.01 ppm STO hydrolyzed + derivatized

Bayleton

Dates Extraction 3 10 81 Injection 3 23 81

Response (Area mm² / Ratio) Sample/Std.

Analyte T.S. Ratio

0.01 ppm STO 8.5 89.0 2 (378.3) 12.0 52.0 2 (342) 1.11

CONFIDENTIAL

PROPERTY OF

MOBAY CHEMICAL CORPORATION
AGRICULTURAL CHEMICALS DIVISION

A ** LE DENTIT # 1431 Monday

B ION MA E 127 00 161 00
C DWELL TIME 400 00 400 00
D MAXIMUM ABUNDANCE 65 15 44 75

E RUN1 TOTAL RUN TIME = 6 4 AMOUNT INJECTED = 6 00

ION =127 00
Full Scale= 6

ION =161 00
Full Scale= 63

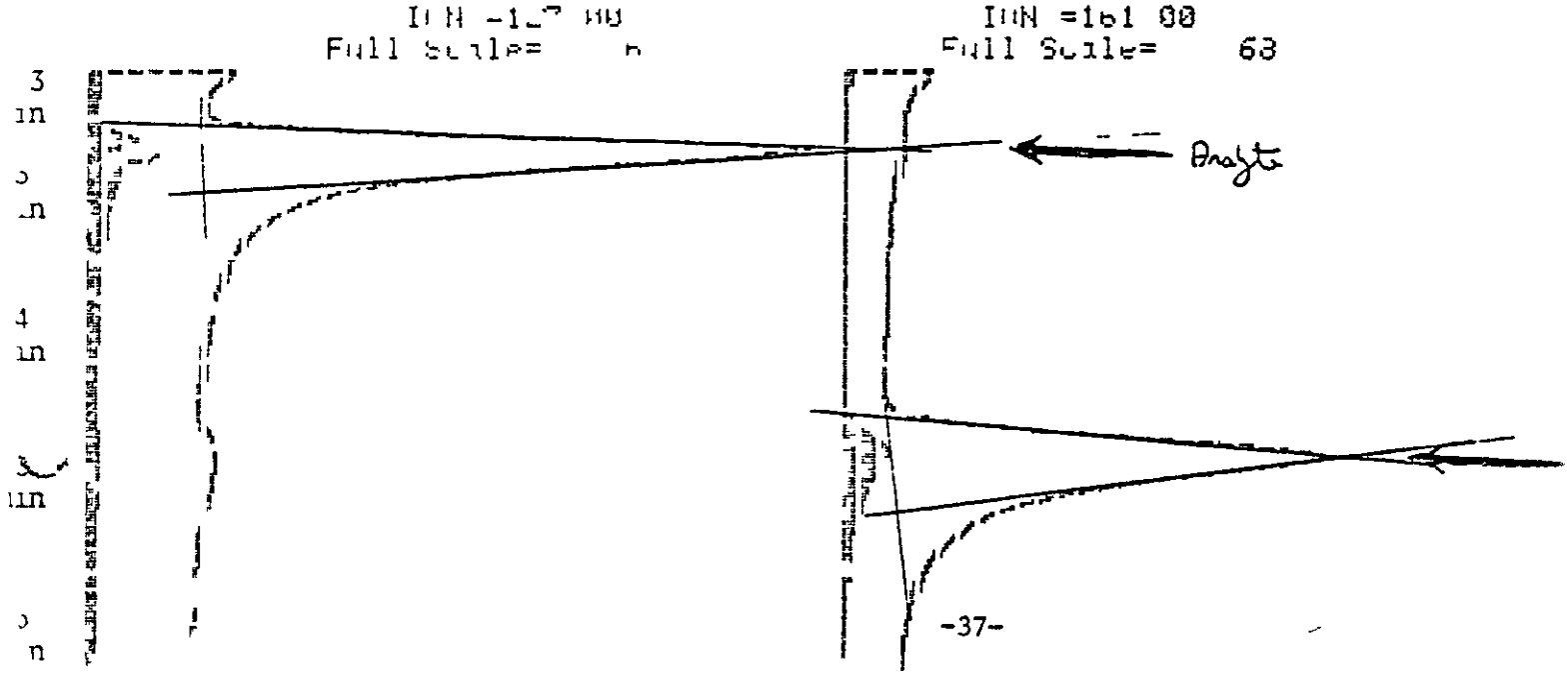

69531

FIGURE 2

CONFIDENTIAL
PROPERTY OF
MOBAY CHEMICAL CORPORATION
AGRICULTURAL CHEMICALS DIVISION

ample & No _____ NBR 1 162 76

Lignin Metabolism Kidney + 24 gm

Control kidney

Dates Extraction 3 9 81 Injection 379 81

Response (Area mm² / Ratio) Sample/Std

	Analyte	IS	Ratio
Sample	75 100.0 2 (375.0)	15.0 4.0 2 (30.0)	12.50 × 179 223 75
0 1ppm STD	80 75.0 2 (300.0)	11.5 4.5 2 (278.0)	1.08

++ [illegible] IDE T[illegible] # 14 [illegible] [illegible] 1[illegible] 1[illegible] 1 Thursday

[illegible] H E 12[illegible] [illegible] 1[illegible]1 [illegible]
DWEL TIME [illegible] 4[illegible] [illegible] 4[illegible] [illegible]
MH [illegible] HEUNDANCE 14[illegible] [illegible] [illegible] 4

RUN1 TOTAL R[illegible] TIME = [illegible] 4 AMOUNT INJECTED = [illegible] 00

ION =1[illegible] [illegible] ION =1[illegible]1 00
Full [illegible] = 14[illegible] Full [illegible] = 1409

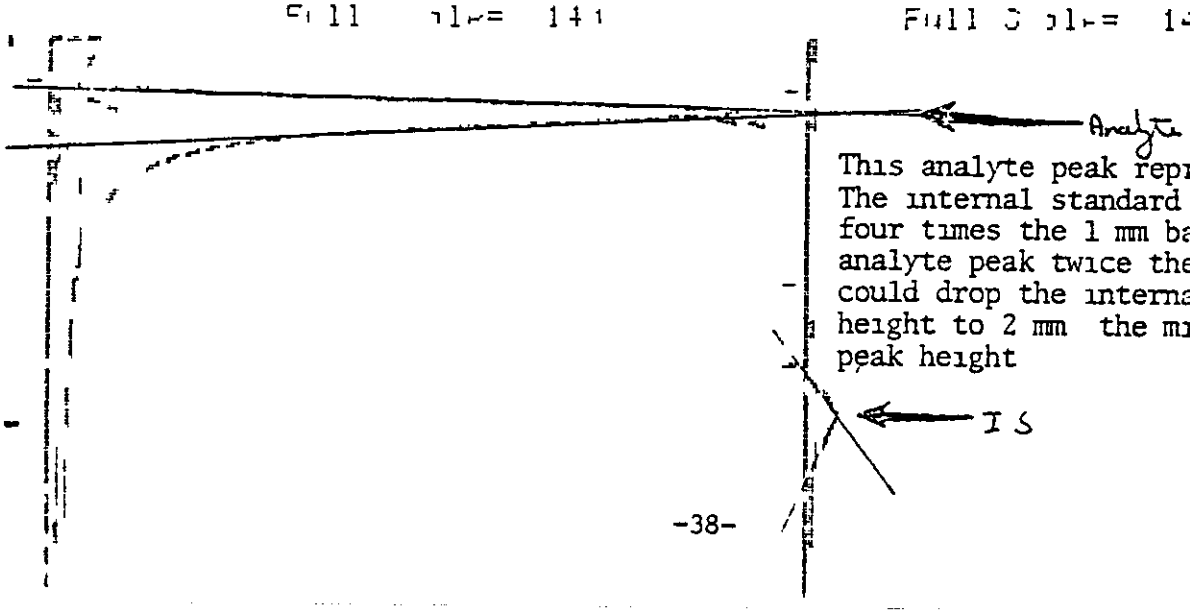

This analyte peak represents 1 2 ppm The internal standard peak is 4 mm high four times the 1 mm baseline An analyte peak twice the length (2 4 ppm) could drop the internal standard peak height to 2 mm the minimum detectable peak height

69531

FIGURE 3

Samp		NBP 1 162-84	
25ppm Mirror Control			
Dates	4 1-81	4 10 81	
	Area mm² Ratio		
Analyte		T S	Ratio
Sample	10.0 5.5 2(27.5)	16.5 29.0 2(65.8)	0.042
0.1ppm STD	11.5 63.0 2(36.3)	14.5 39.0 2(28.8)	1.28

CONFIDENTIAL

PROPERTY OF

MOBAY CHEMICAL CORPORATION
AGRICULTURAL CHEMICALS DIVISION

+++ SAMPLE IDENTIFIER # 1 [illegible] 4 10 1981 Friday

ION [illegible]	127 00	161 00
DWELL TIME [illegible]	400 00	400 00
MAXIMUM ABUNDANCE	[illegible]	[illegible]

RUN TOTAL RUN TIME = [illegible] 4 AMOUNT INJECTED = 6 00

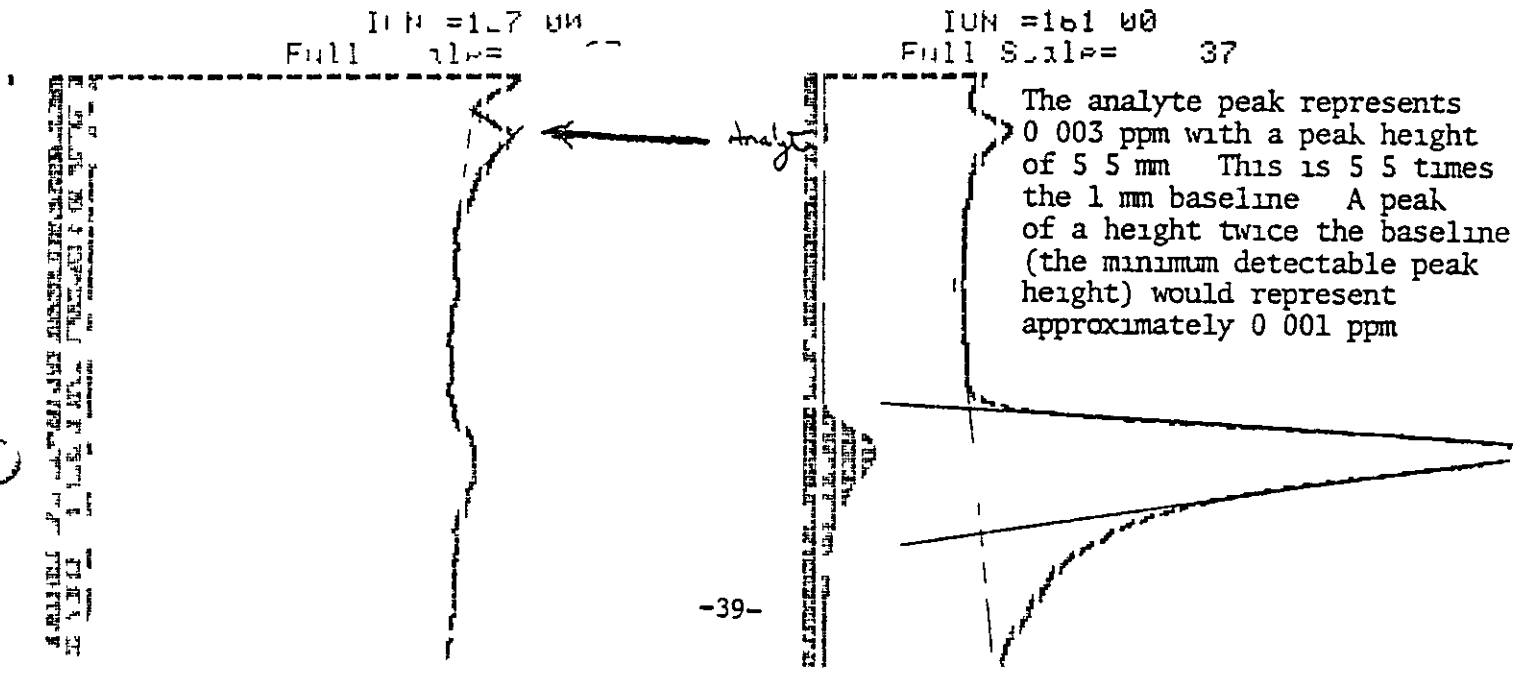

The analyte peak represents 0 003 ppm with a peak height of 5 5 mm This is 5 5 times the 1 mm baseline A peak of a height twice the baseline (the minimum detectable peak height) would represent approximately 0 001 ppm

FIGURE 4

69531

Confirmatory

Sample & No _____ NBR 1162 85

25gm Muscle Control

Dates 4-1-81 [illegible] 4-10-81

	Analyte	I.S.	Ratio
Sample	50 15 2(3.8)	16.5 69.0 2(569.3)	0.01
0.1ppm STD	110 820 2(451.0)	160 500 2(400)	1.13

CONFIDENTIAL

PROPERTY OF

MOBAY CHEMICAL CORPORATION
AGRICULTURAL CHEMICALS DIVISION

+++ [illegible] IDENT[illegible] [illegible] Friday

ION MA[illegible]E [illegible]4 00 [illegible]
DWELL TIME[illegible] [illegible] 400 [illegible] 400 [illegible]
MA IN[illegible] ABUNDANCE 1 6[illegible] 6 [illegible]

RUN [illegible] TOTAL RUN TIME = [illegible] 4 AMOUNT INJECTED = 6 [illegible]

ION = [illegible]4 [illegible]
Full Scale= [illegible]

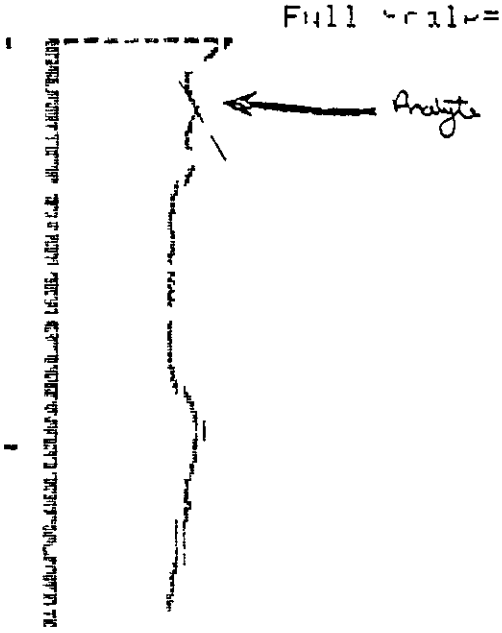

ION = [illegible]3 [illegible]
Full Scale= 7

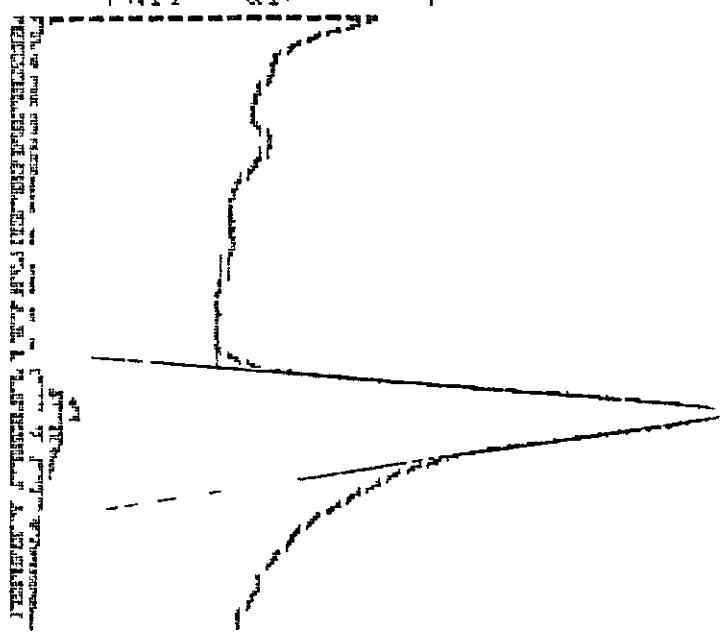

69531

SPECIFIC-ION CHARTS FOR

APPENDIX I

PRIMARY QUANTITATION (IONS 127 AND 161) OF BAYLETON AND METABOLITES IN BOVINE TISSUES AND MILK

(INCLUDING QUANTITATION OF METABOLISM LIVER AND KIDNEY SAMPLES PROVIDED BY MOBAY)

CONFIDENTIAL

PROPERTY OF

MOBAY CHEMICAL CORPORATION
AGRICULTURAL CHEMICALS DIVISION

69531

Sample & No _____ NBR 1-162 93

25gm Liver Control

Dates Extraction 4 21 81 Injection 4 22-81

Response ($\frac{\text{Area mm}^2}{\text{Ratio}}$) Sample/Std

	Analyte	IS	Ratio
Sample	100 30 2(150)	120	25.5 2(4530) 0.03
0.1ppm STD	9.0 61.0 2(244.0)	110	42.0 2(231.0) 1.06

CONFIDENTIAL

PROPERTY OF

MOBAY CHEMICAL CORPORATION
AGRICULTURAL CHEMICALS DIVISION

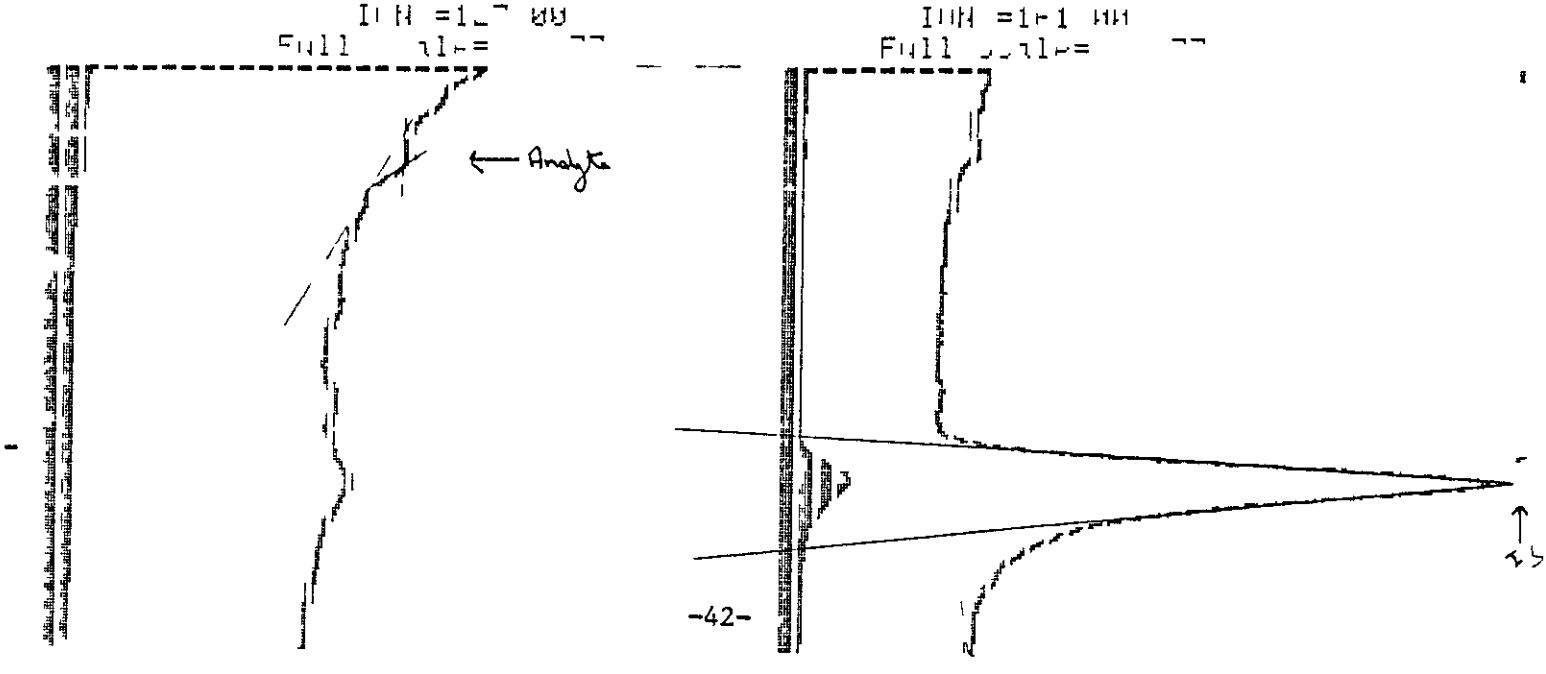

69531

Sample & No _____ NBR 1162 93

25 gm Liver Control Fortified with 0.1ppm Bayleton

Dates Extraction 4 21 81 Injection 4 27-81

Response (Area mm² / Ratio) Sample/Std

	Analyte	I.S	Ratio
Sample	8.0 67.5 2 (270.0)	11.5 47.5 2 (273.1)	0.99
0.1ppm STD	8.0 70.0 2 (280.0)	12.0 47.5 2 (285.0)	0.98

CONFIDENTIAL

PROPERTY OF

MOBAY CHEMICAL CORPORATION
AGRICULTURAL CHEMICALS DIVISION

+++ AMPLE IDENTITY # 2 00 dated 4 27 1981 Monda

ION MASSES	127 00	161 00
DWELL TIMES MSP	400 00	400 00
MAXIMUM ABUNDANCE	129 47	50 57

RUN 3 TOTAL RUN TIME = 6 4 AMOUNT INJECTED = 6 00

ION =127 00
Full Scale= 130

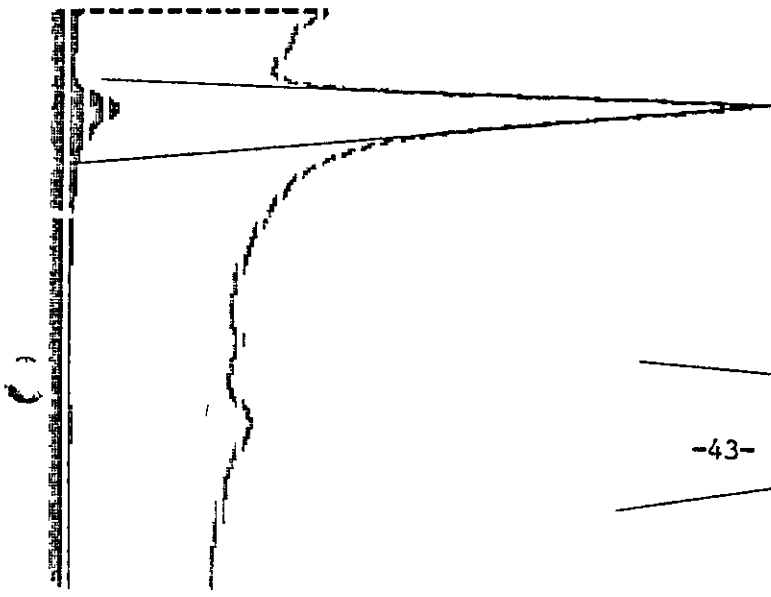

ION =161 00
Full Scale= 130

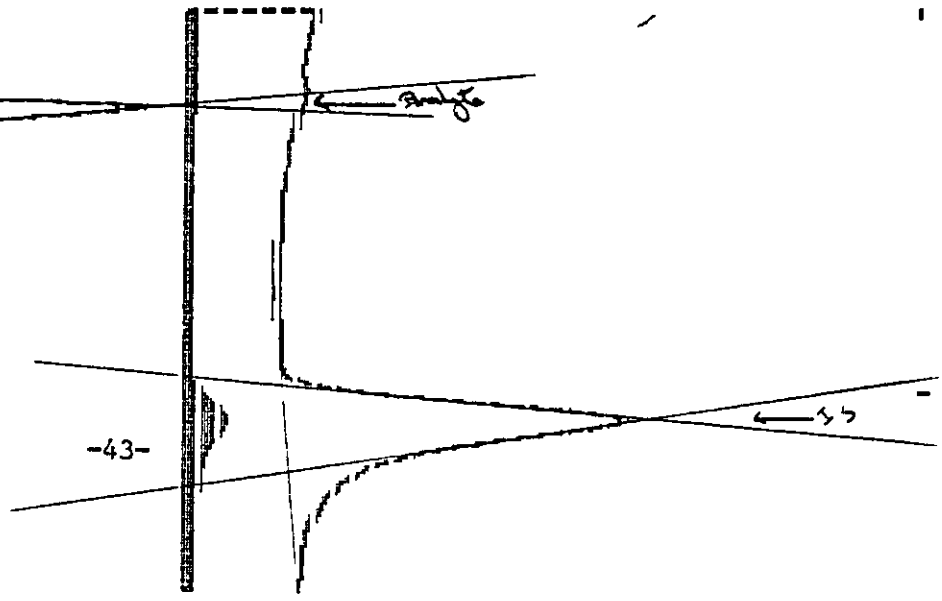

69531

CONFIDENTIAL

PROPERTY OF

MOBAY CHEMICAL CORPORATION
AGRICULTURAL CHEMICALS DIVISION

Sample & No _____ NBR 1162-93

25 gm Control Liver Fortified with 0.05 ppm Baylet[illegible]

Dates. Extraction 4-21-81 Injection 4-27-81

Response (Area mm² Ratio) Sample/Std.

	Analyte	I.S.	Ratio
Sample	18.5 × 51.0 2 (216.8)	120 71.0 2 (426.0)	0.51
0.1 ppm STD	8.0 70.0 2 (280.0)	120 47.5 2 (285.0)	0.98

+++ AMPLE IDENTIT # [illegible] 4 [illegible] 1 [illegible]

[illegible] MA E 1[illegible] [illegible] 1[illegible]1 [illegible]
[illegible]WELL TIME [illegible] 4[illegible] [illegible] 4[illegible] [illegible]
[illegible] IMUM HEUNDANCE [illegible] 4[illegible] [illegible]4 17

[illegible] TOTAL RUN TIME = [illegible] 4 AMOUNT INJECTED = [illegible] [illegible]

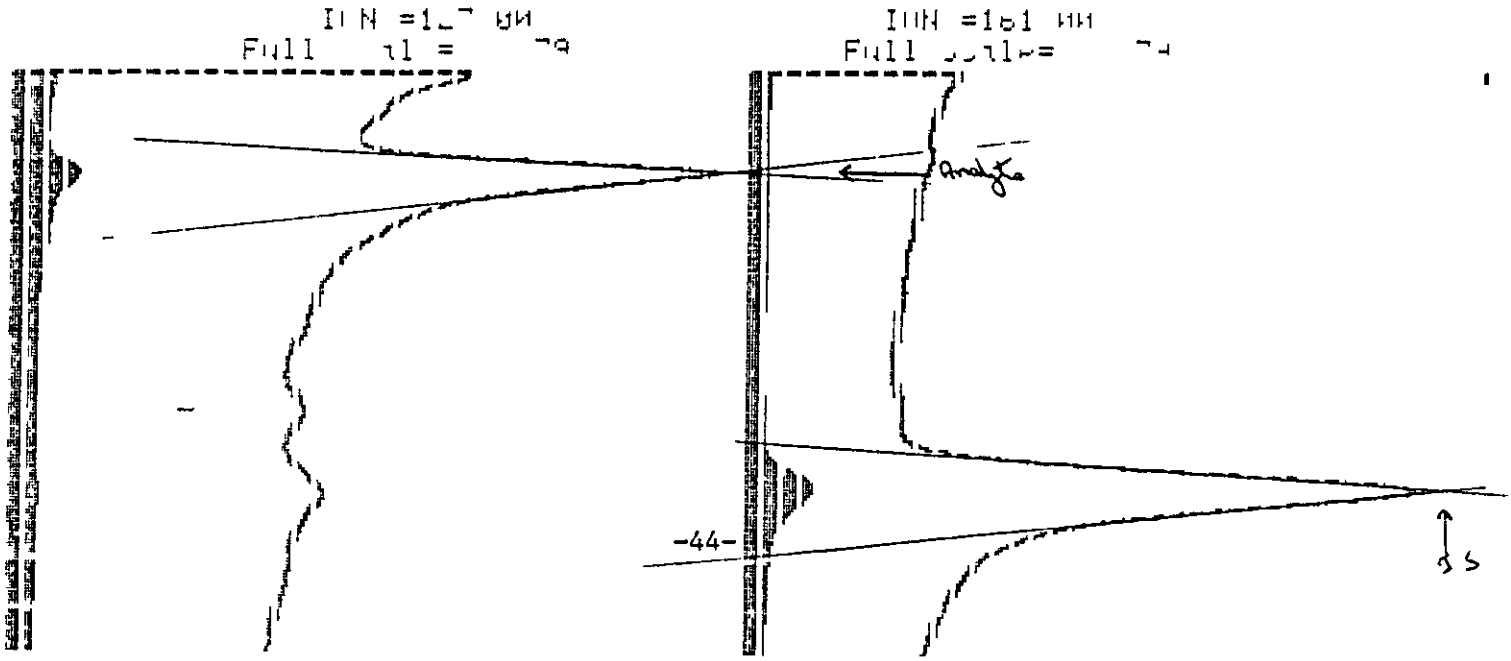

69531

CONFIDENTIAL

PROPERTY OF

MOBAY CHEMICAL CORPORATION
AGRICULTURAL CHEMICALS DIVISION

Sample & No _____ NBR 1-162-93

25 gm Control Liver Fortified with 0.1ppm

KWG 0519

Dates Extraction 4 21 81 Injection 4 27-81

Response (Area mm² / Ratio) Sample/Std

	Analyte			I.S.			Ratio
Sample	9.0	34.0	2 (153.0)	12.5	26.5	2 (165.6)	0.92
0.1ppm STD	8.0	64.5	2 (258.0)	12.0	42.5	2 (255.0)	1.01

--- AMPLE IDENTITY # 4 00 dated 4 27 1981 Monda

ON MA E	127 00	161 00
WELL TIME	400 00	400 00
MA IMUM ABUNDANCE	47 44	27 [illegible]

UN F TOTAL RUN TIME = 6 4 AMOUNT INJECTED = 6 00

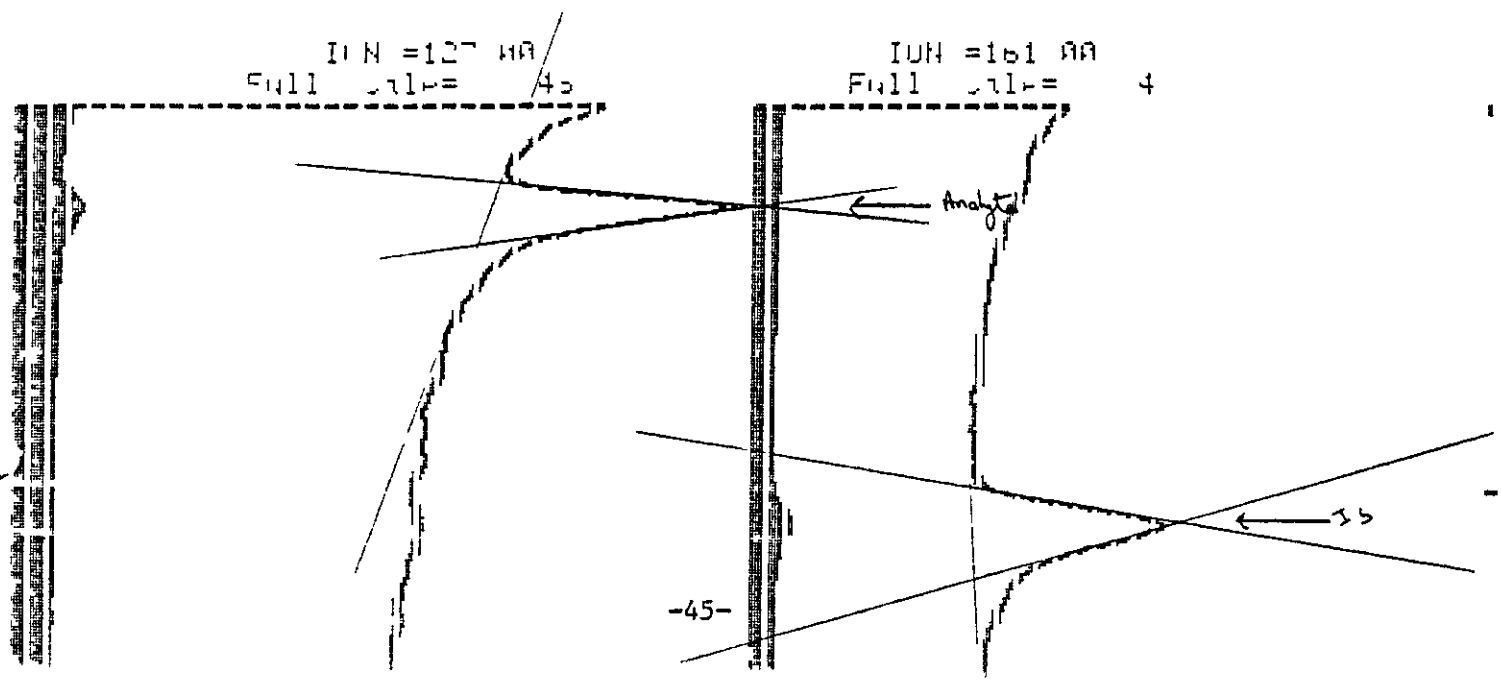

69531

CONFIDENTIAL

PROPERTY OF

MOBAY CHEMICAL CORPORATION
AGRICULTURAL CHEMICALS DIVISION

Sample & No _____ NBR 1162 93

25gms Control Liver Fortified with 0.05ppm

KWG 0519

Dates. Extraction 4 21-81 Injection 4 27-81

Response (Area mm² Ratio) Sample/Std

	Analyte			I.S.			Ratio
Sample	9.5	39.5	2(1876)	11.5	74.5	2(4284)	0.44
0.ppm STD	8.0	64.5	2(258.0)	12.0	42.5	2(2550)	1.01

--- AMPLE IDENTITY # 5 [illegible] 4 [illegible] 1[illegible] [illegible]

Weissenburger 4 7 81 wrong sample # typed in

N MA SE 12[illegible] [illegible] 1 1 [illegible]

WELL TIME [illegible] 40[illegible] [illegible] 4[illegible] [illegible]

A IMUM ABUNDANCE [illegible] 4[illegible] [illegible]

UN [illegible] TOTAL RUN TIME = [illegible] AMOUNT INJECTED = [illegible]

ION =1[illegible] [illegible] ION =161 [illegible]

Full [illegible] Full [illegible]

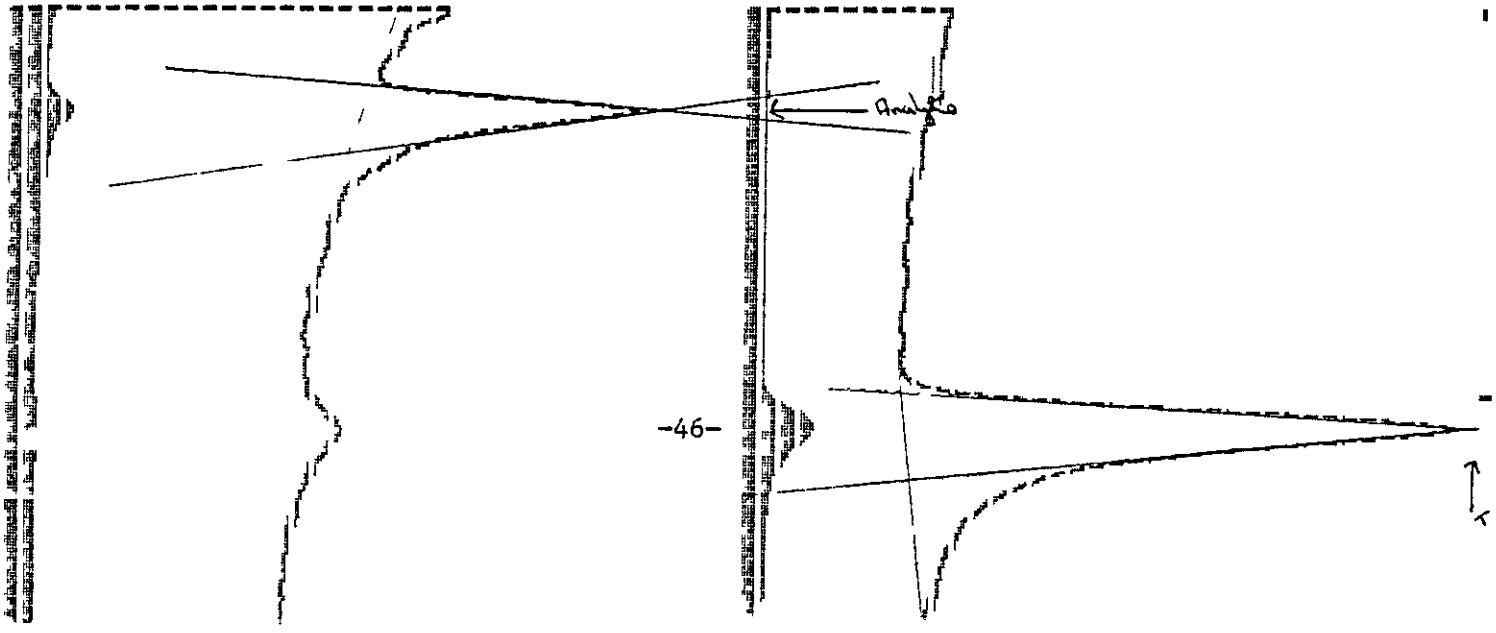

69531

CONFIDENTIAL

PROPERTY OF

MOBAY CHEMICAL CORPORATION
AGRICULTURAL CHEMICALS DIVISION

Sample & No. _____ NBR 1162 93

25 gm Liver Control Fortified with 0.1 ppm

KWG 1640

Dates Extraction 4 21-81 Injection 4 27-81

Response (Area mm² / Ratio) Sample/Std.

	Analyte		I.S.		Ratio
Sample	9.0	590.2 (265.5)	12.0	55.5.2 (333.0)	0.80
0.1 ppm STD	8.0	720.2 (288.0)	13.0	50.5.2 (328.0)	0.88

--- AMPLE IDENTITY # 6 00 dated 4 27 1981 Monday

ON MAS ES	127 00	161 00
WELL TIMES	400 00	400 00
MAXIMUM ABUNDANCE	94 59	69 01

ON - TOTAL RUN TIME = 6 7 AMOUNT INJECTED = 6 00

ION =127 00
Full Scale= 95

ION =161 00
Full Scale = 95

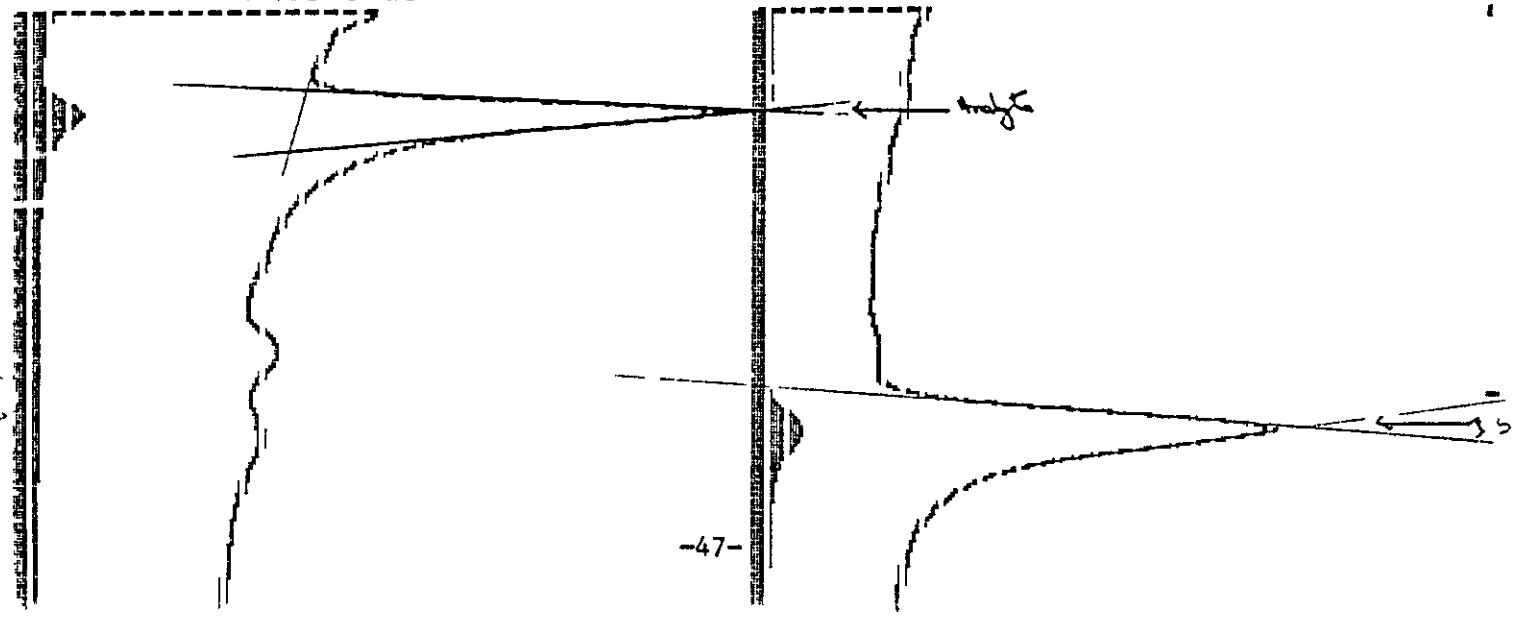

69531

CONFIDENTIAL

PROPERTY OF

MOBAY CHEMICAL CORPORATION
AGRICULTURAL CHEMICALS DIVISION

Sample & No _____ NBR 116293

25gm Liver Control Fortified with 0.05ppm

KWG 1640

Dates Extraction 4 21 81 Injection 4 27 81

Response (Area mm² / Ratio) Sample/Std

	Analyte		I.S.		Ratio
Sample	85	743.5 2 (184.9)	120	785 2 (471.0)	0.39
0.1ppm STD	80	720 2 (288.0)	130	505 2 (328.2)	0.88

--- AMPLE IDENTITY # 7 00 dat d 4 27 1981 Monda

IN MA E	127 00	181 00
DWELL TIME	400 00	400 00
MA IMUM ABUNDANCE	70 24	77 12

FUN10 TOTAL FUN TIME = 6 7 AMOUNT INJECTED = 6 00

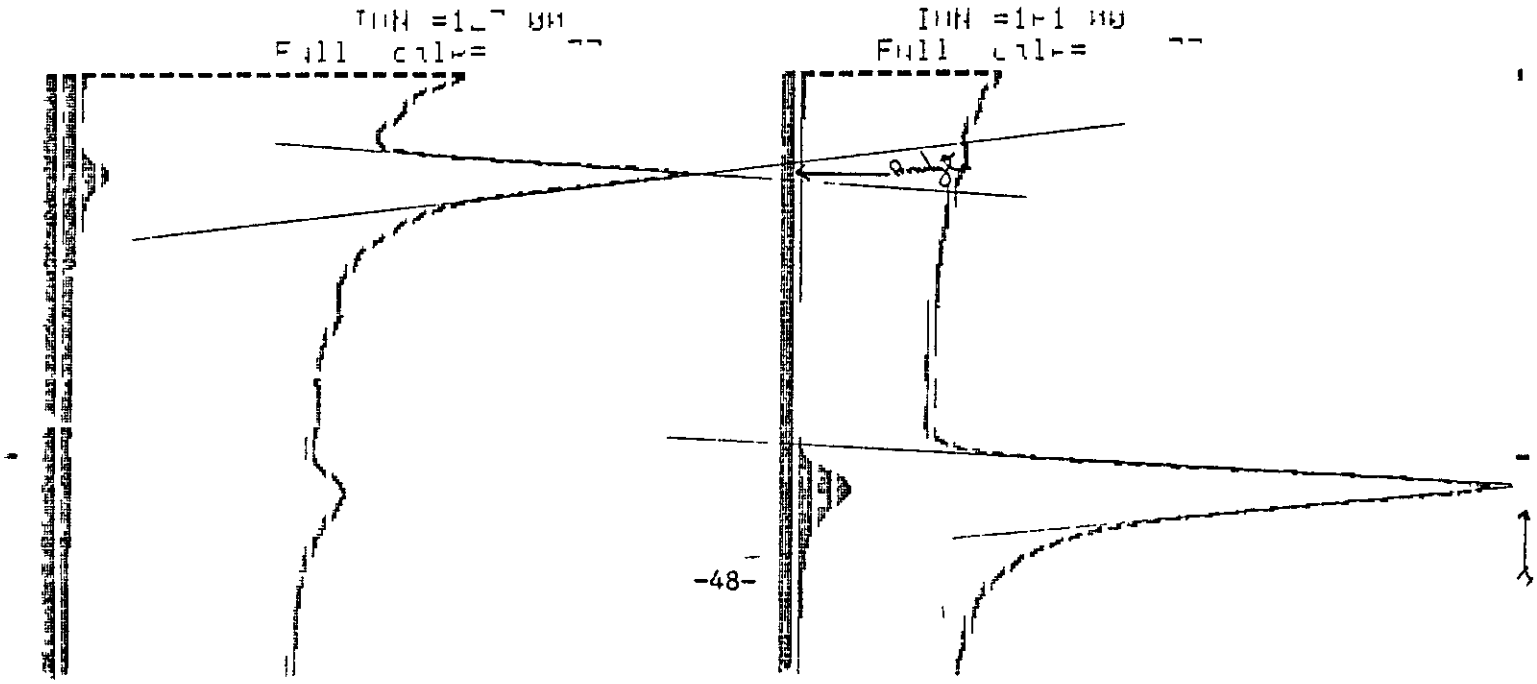

69531

CONFIDENTIAL
PROPERTY OF
MOBAY CHEMICAL CORPORATION
AGRICULTURAL CHEMICALS DIVISION

Sample & No _____ NBR 1162-93
25 gm Control Liver Fortified with
0.1 ppm XWX 1342

Dates. Extraction 4 21 81 Injection 4 22 81

Response (Area mm² / Ratio) Sample/Std

	Analyte	I.S	Ratio
Sample	8.5 69.0 2 (293.2)	12.0 55.5 2 (333.0)	0.88
0.1ppm STD	8.0 73.5 2 (294.0)	12.0 52.5 2 (315.0)	0.93

--- SAMPLE IDENTITY # 9 00 dated 4 27 1981 Monda

ION MA E 127 00 161 00
WELL TIME 400 00 400 00
A IMUM ABUNDANCE 126 5 75 5

RUN11 TOTAL RUN TIME = 6 7 AMOUNT INJECTED = 6 00

ION =127 00
Full Scale= 127

ION =161 00
Full Scale= 127

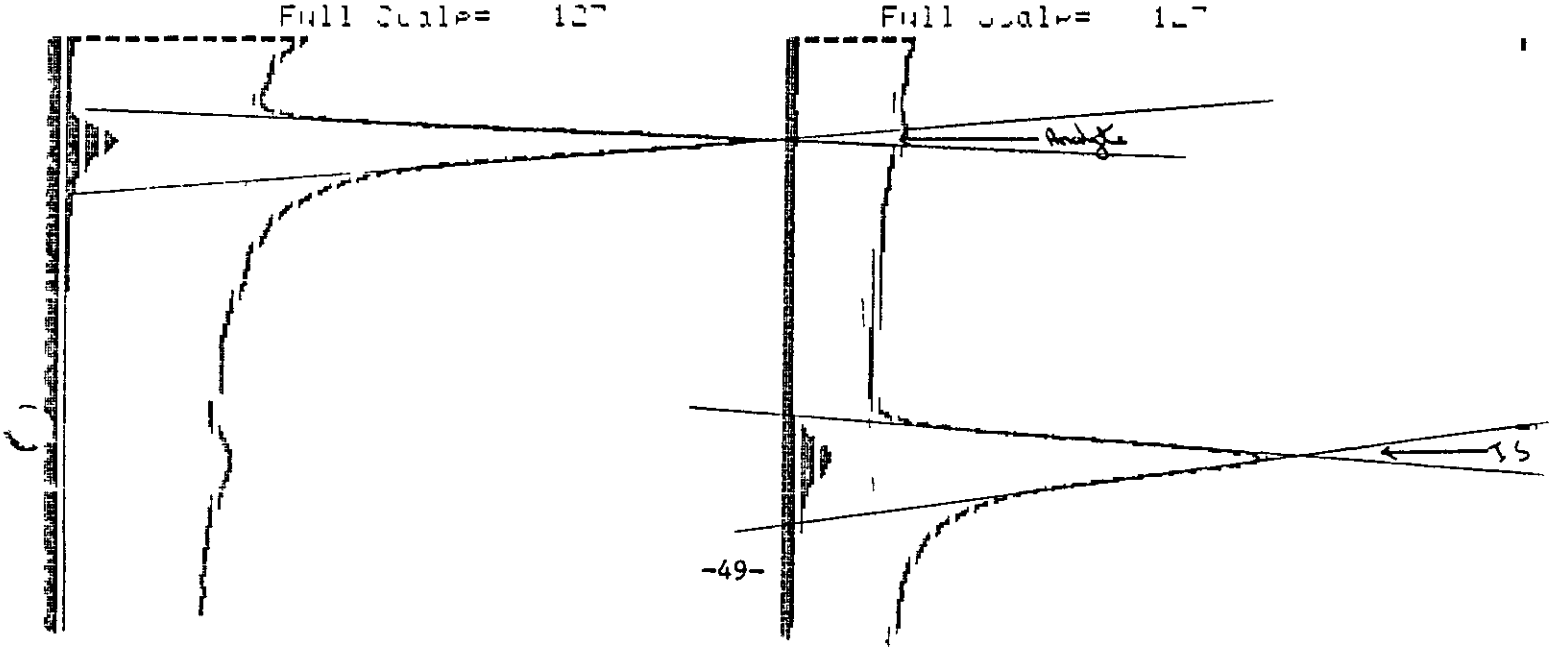

69531

CONFIDENTIAL

PROPERTY OF

MOBAY CHEMICAL CORPORATION
AGRICULTURAL CHEMICALS DIVISION

Sample & No _____ NBR 1162 93

25 gm Liver Control Fortified with

0.05 ppm KWG 1342

Dates Extraction 4 21 81 Injection 4 27 81

Response (Area mm² Ratio) Sample/Std

	Analyte			I.S.			Ratio
Sample	8.5	51.5	2 (218.9)	12.0	79.5	2 (477.0)	0.46
0.1 ppm STD	8.0	73.5	2 (294.0)	12.0	52.5	2 (315.0)	0.93

++ AMPLE IDENTIT, # 4 00 [illegible] 4 [illegible] 14 1 [illegible]

IN MA E 1[illegible] 00 1[illegible]1 00
ELL TIME [illegible] 400 00 400 00
H IMUM HEUNDANCE [illegible] 74 [illegible]1 [illegible]

UN1[illegible] TOTAL RUN TIME = [illegible] AMOUNT INJECTED = [illegible] 00

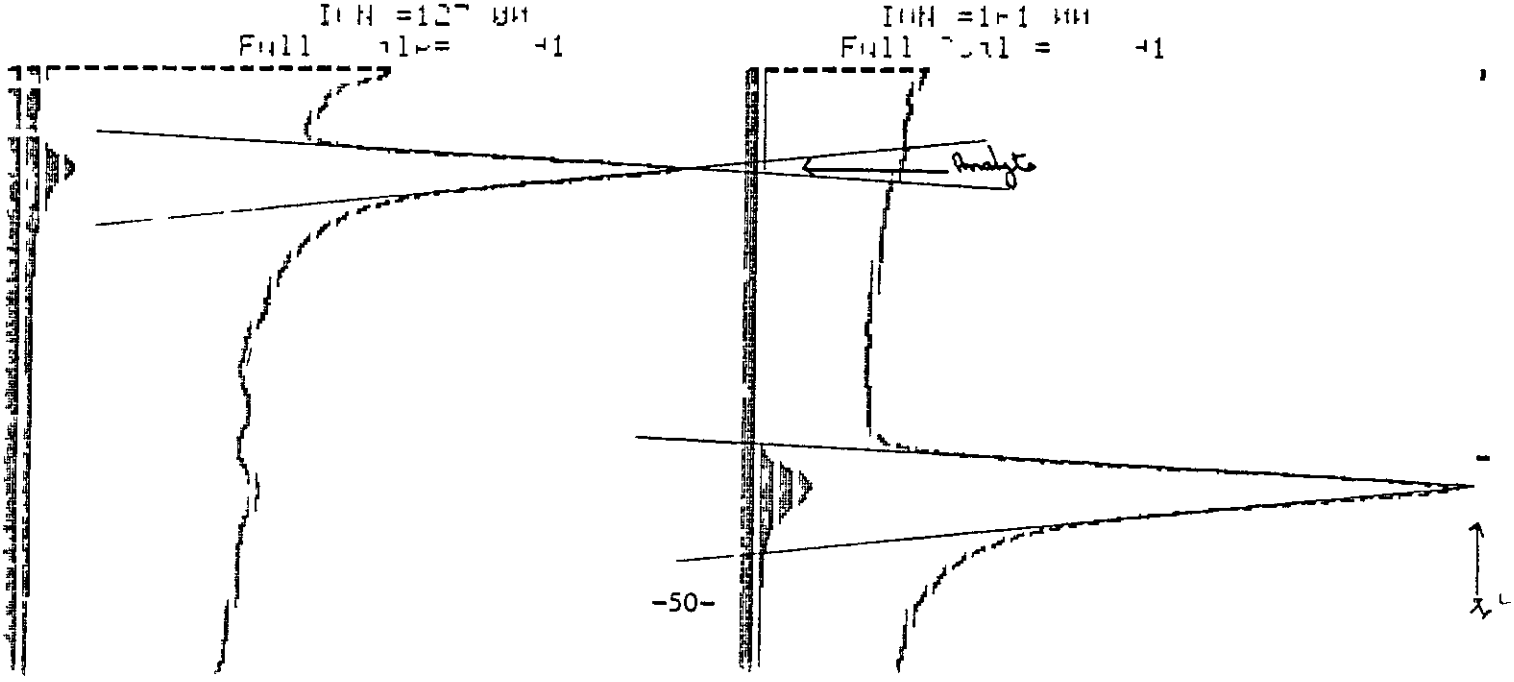

69531

CONFIDENTIAL

PROPERTY OF

MOBAY CHEMICAL CORPORATION
AGRICULTURAL CHEMICALS DIVISION

Sample & No _____ NBR 1162 93

25gm Control Liver Sortified with

0.1ppm KWG 1323

Dates. Extraction 4 21 81 Injection 4 27 81

Response (Area mm² / Ratio) Sample/Std.

	Analyte	I.S.	Ratio
Sample	9.0 67.5' 2 (303.8)	12.5 51.5 2 (321.9)	0.94
0.1ppm STD	8.0 74.0 2 (296.0)	12.0 54.5 2 (327.0)	0.91

--- AMPLE IDENTITY # 10 00 dated 4 27 1 1 Monday

ON MASSES	127 00	161 00
WELL TIMES	400 00	400 00
AXIMUM ABUNDANCE	127 52	81 45

UN14 TOTAL RUN TIME = 6 7 AMOUNT INJECTED = 6 00

ION =127 00
Full Scale= 128

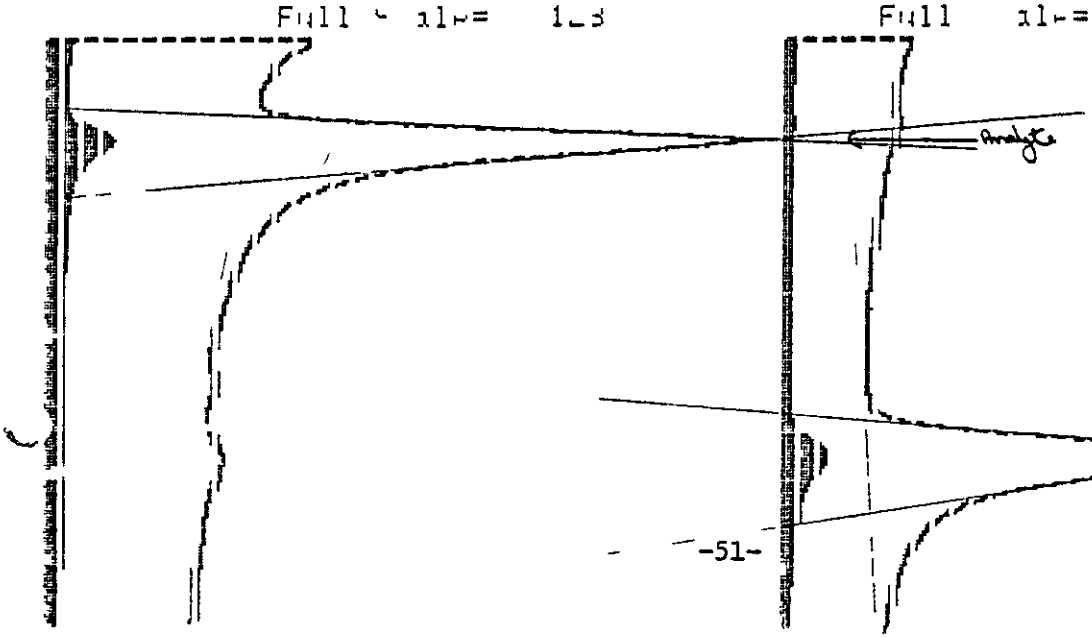

ION =161 00
Full Scale= 128

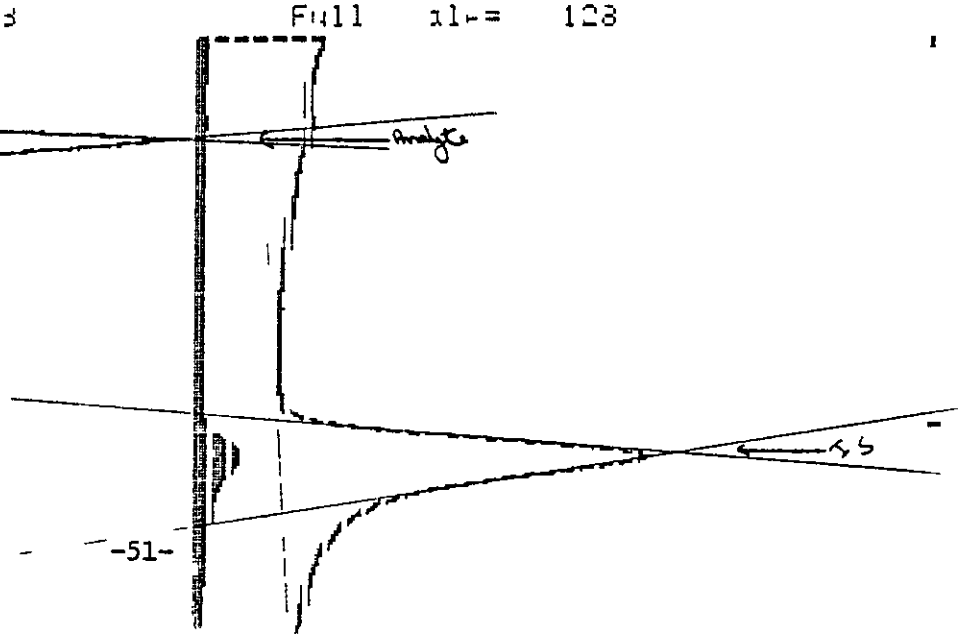

69531

CONFIDENTIAL

PROPERTY OF

MOBAY CHEMICAL CORPORATION
AGRICULTURAL CHEMICALS DIVISION

Sample & No _____ NBR 1162 93

25gm Liver Control fortified with

0.05ppm KWG 1323

Dates Extraction 4 21 81 Injection 4 27 81

Response (Area mm² Ratio) Sample/Std.

	Analyte	I.S.	Ratio
Sample	8.5 44.0 2 (187.0)	12.5 23.0 2 (456.2)	0.41
0.1ppm STD	8.0 74.0 2 (296.0)	12.0 54.5 2 (327.0)	0.91

** AMPLE IDENTITY # 11 00 dated 4 27 1981 Monda

ON MA E 127 00 1F1 00
WELL TIME 400 00 400 00
MA IMUM HEUNDANCE 6 07 F7 41

FUN1F TOTAL FUN TIME = 6 7 AMOUNT INJECTED = 6 00

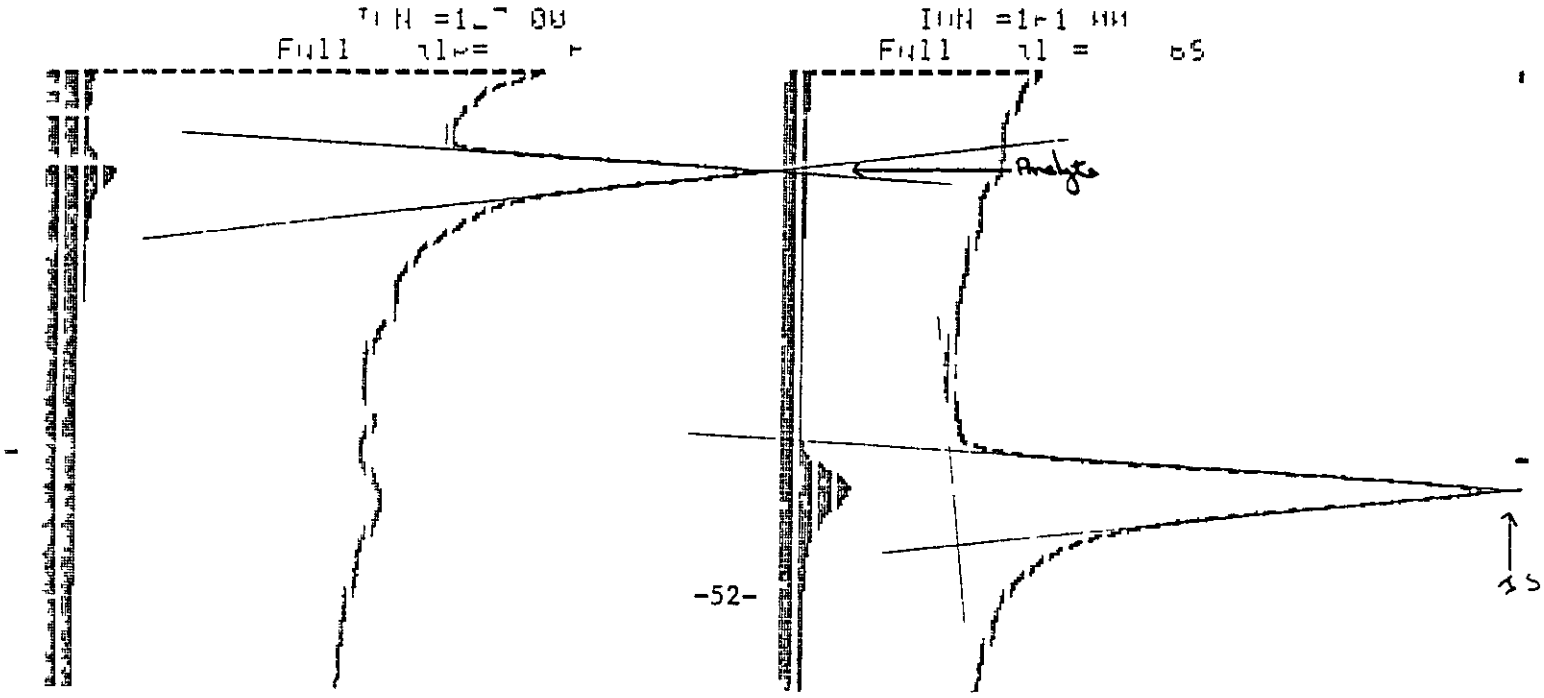

69531

CONFIDENTIAL
PROPERTY OF
MOBAY CHEMICAL CORPORATION
AGRICULTURAL CHEMICALS DIVISION

Sample & No _____ NBR 1162-89

Reagent Blank

Dates 4-1-81 r i n 4 10 81

Area mm²

Fe t Ratio / td

	Analyte			I.S			Ratio
Sample	0.0	0.0	2(0.0)	15.0	84.0	2(630.0)	0.0
0.1ppm STD	9.5	63.0	2(299.3)	13.0	41.0	2(266.5)	1.12

** SAMPLE IDENTITY # 14 30 d ed 4 10 4 Fr d

ION MASSES	127 00	161 00
WELL TIME (m c)	400 00	400 00
MAXIMUM ABUNDANCE	32 74	41 95

RUN 3 TOTAL RUN TIME = 6 4 AMOUNT INJECTED = 6 00

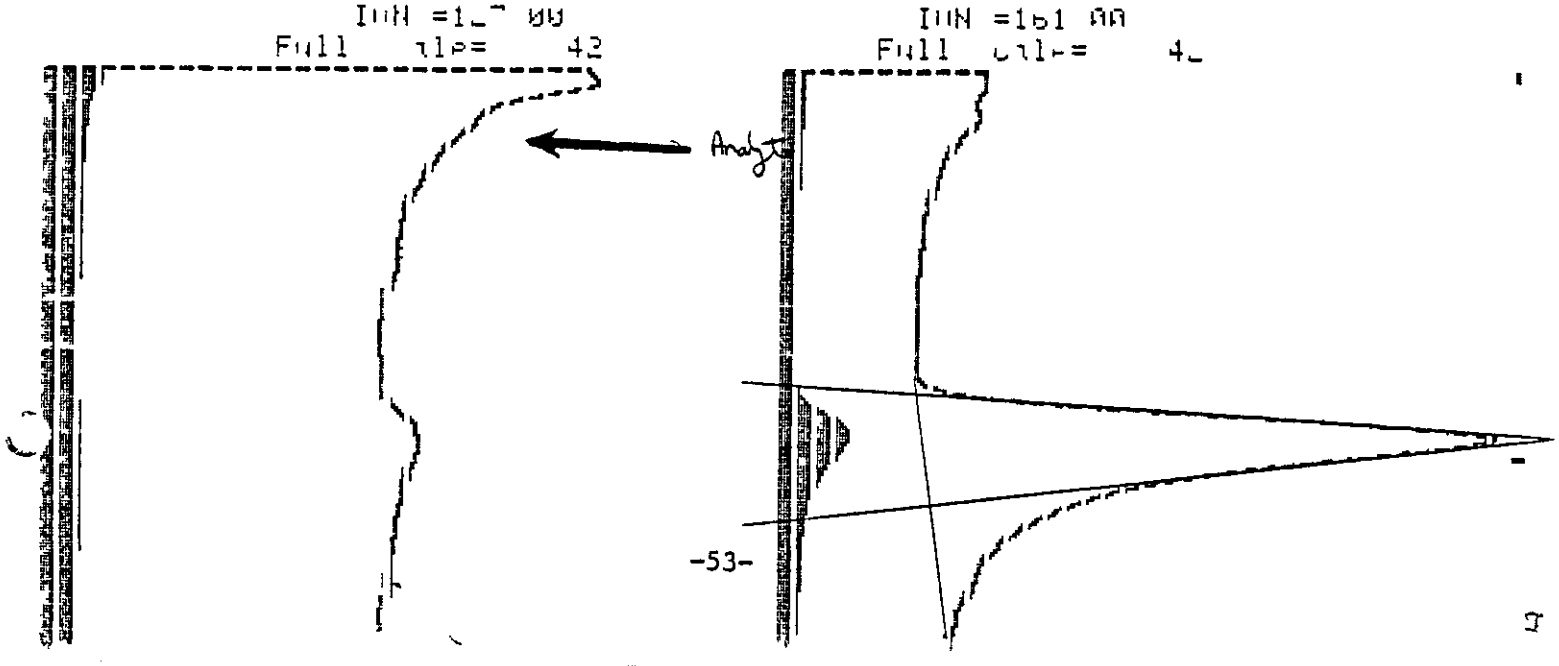

69531

Sample & No _____ NBR 1-162 93

Typical 0.1ppm Std hydrolyzed + derivatized

Bayleton

Dates Extraction 4 21 81 Injection 4 27-81

Response (Area mm² Ratio) Sample/Std

Analyte + I.S. Ratio

Sample			
0.1ppm STD	80 610 2 (244 0)	110 420 2 (231 0)	1 06

CONFIDENTIAL

PROPERTY OF

MOBAY CHEMICAL CORPORATION
AGRICULTURAL CHEMICALS DIVISION

+++ AMPLE IDENTITY # 1_ 00 dated 4 _7 1981 Monday

TUN MA SE 1_7 00 1F1 00
WELL TIME 400 00 400 00
MA IMUM ABUNDANCE 47 4 5- 11

UN 1 TOTAL RUN TIME = F 4 AMOUNT INJECTED = 6 00

IUN =1_7 00
Full ale= 44

IUN =1F1 00
Full scale= 44

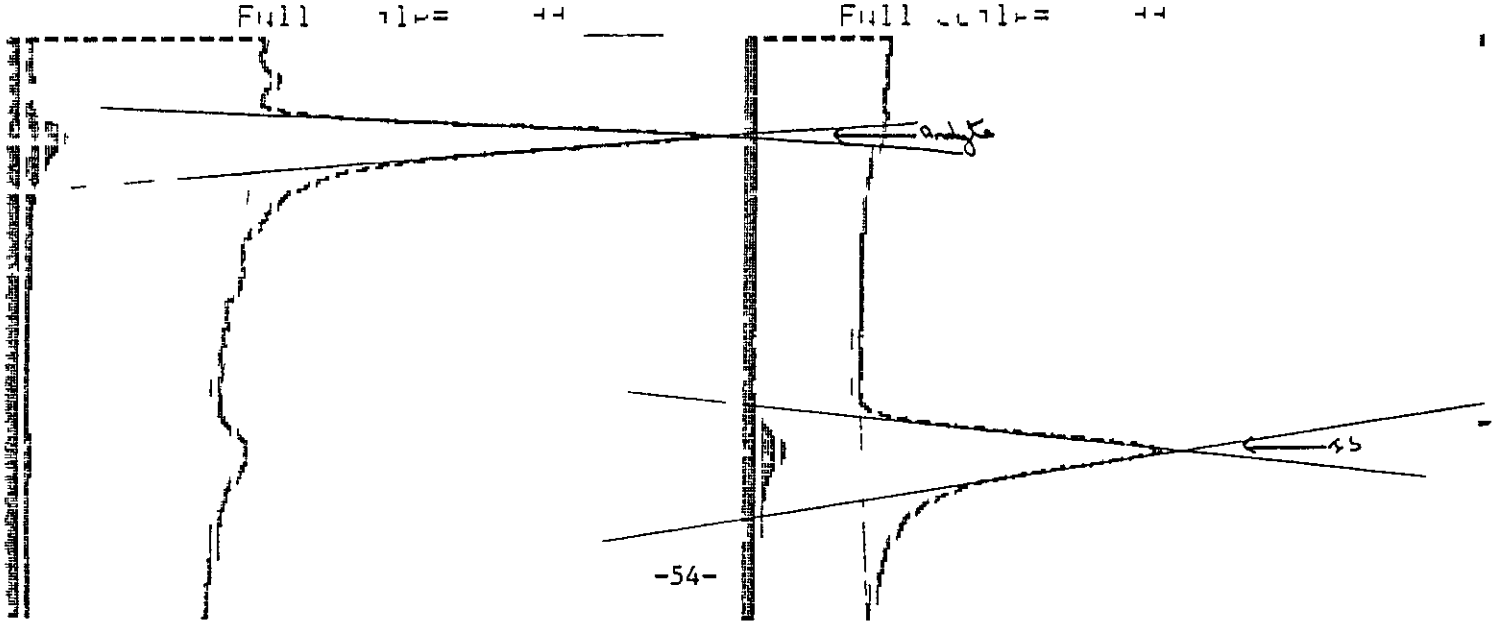

69531

CONFIDENTIAL
PROPERTY OF
MOBAY CHEMICAL CORPORATION
AGRICULTURAL CHEMICALS DIVISION

Sample & No. _____ NBR K162 76

25gm Kidney Control

Dates Extraction 3 9 81 Injection 3 18 81

Response (area mm ratio amp / d

	Analyte			I.S.			Ratio
Sample	0.0	0.0	2(0.0)	11.5	55.0	2(316.2)	0.0
0.1ppm STD	7.5	67.5	2(253.1)	12.0	46.0	2(276.0)	0.91.7

+++ AMPLE IDENTITY # 1 00 dated 3 16 1981 Wednesday

ON MASSE	127 00	161 00
DWELL TIME	400 00	400 00
MAXIMUM ABUNDANCE	24 14	54 64

RUN 2 TOTAL RUN TIME = 4 AMOUNT INJECTED = 6 00

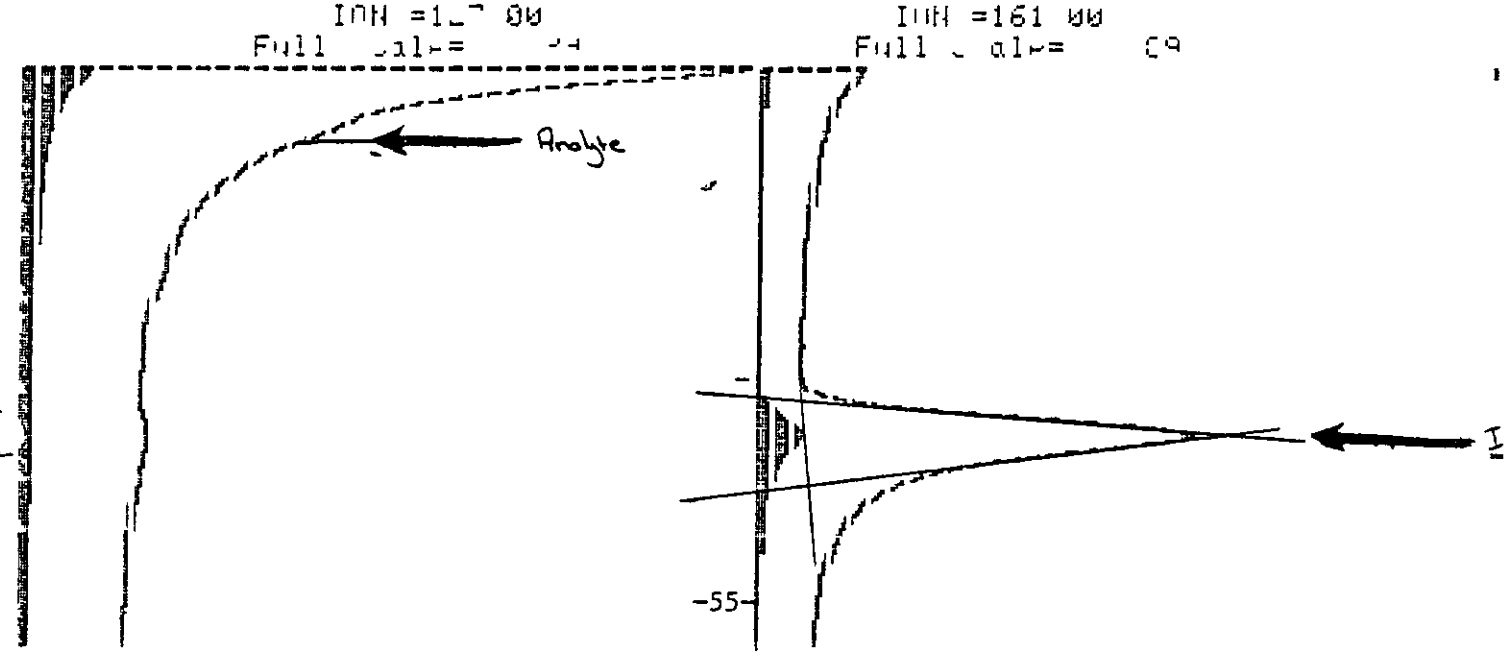

69531

CONFIDENTIAL
PROPERTY OF
MOBAY CHEMICAL CORPORATION
AGRICULTURAL CHEMICALS DIVISION

Sample & No _____ NBR 116276

25gm Central Kidney fortified with 0.1ppm Bayleton

Dates Extraction 3 9-81 Injection 3-18 81

Response area mm² Ratio Sample/Std

	Analyte	I S	Ratio
Sample	9.5 63.0 2 (299.3)	12.5 40.0 2 (250.0)	1.20
0.1ppm STD	8.5 72.0 2 (306.0)	11.5 49.0 2 (281.8)	1.09

+++ AMPLE IDENTITY # 2 00 dated 1[illegible] 1[illegible]31 Wednesday

ON MA E	1[illegible]7 00	1[illegible]1 00
DWELL TIME	400 00	400 00
MA IMUM ABUNDANCE	14[illegible] 1[illegible]	[illegible]4 5[illegible]

RUN TOTAL RUN TIME = [illegible] 4 AMOUNT INJECTED = [illegible] 00

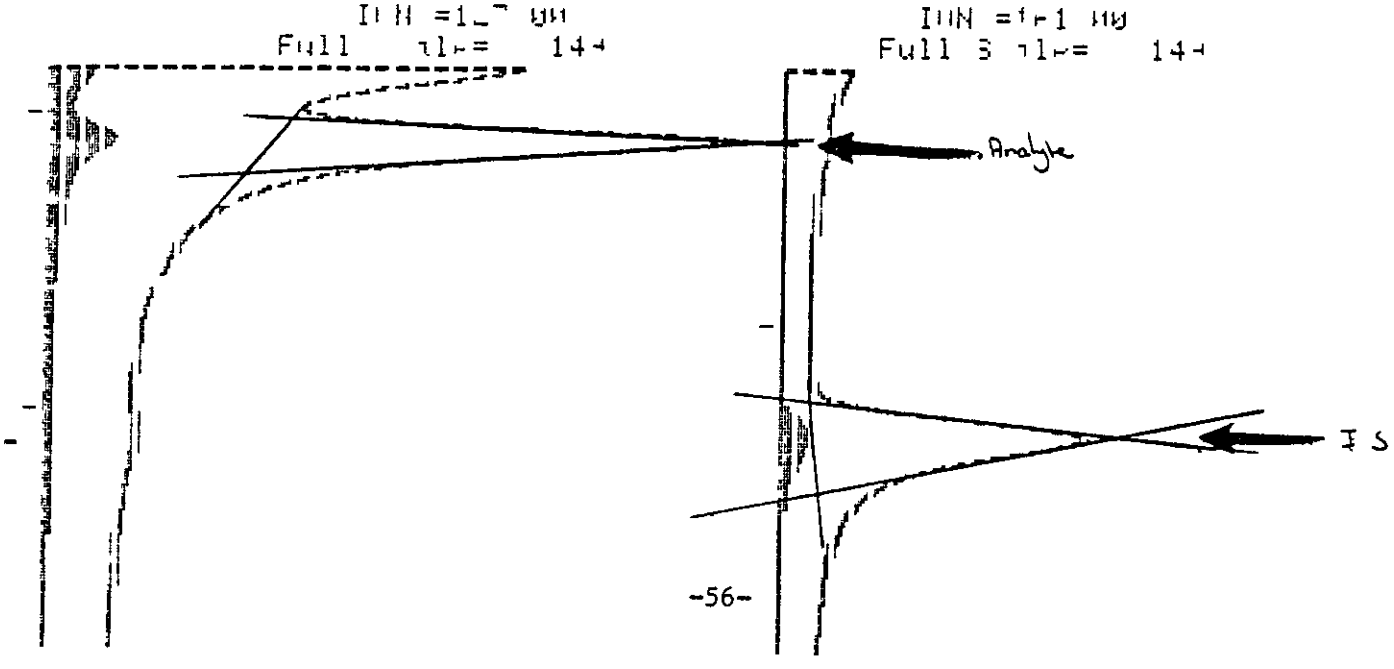

69531

CONFIDENTIAL

PROPERTY OF

MOBAY CHEMICAL CORPORATION
AGRICULTURAL CHEMICALS DIVISION

Sample & No _____ NBR 1-162-76

25gm Control Kidney fortified w/ 0.05 ppm Bayleton

Dates Extraction 3-9-81 Injection 3-18-81

Response (Area mm² / Ratio) Sample/Std.

	Analyte	I.S.	Ratio
Sample	12.0 24.0 2 (144.0)	73.0 34.0 2 (221.0)	0.65
0.1ppm STD	8.5 72.0÷2 (306.0)	11.5 49.0÷2 (281.8)	1.09

--- AMPLE IDENTITY # 3 00 dated 3 18 1981 Wednesda

ION MASSE	127 00	161 00
WELL TIME (MSEC)	400 00	400 00
MAXIMUM ABUNDANCE	79 45	30 34

RUN 5 TOTAL RUN TIME = 6 4 AMOUNT INJECTED = 6 00

ION =127 00
Full Scale= 0

ION =161 00
Full Scale= 80

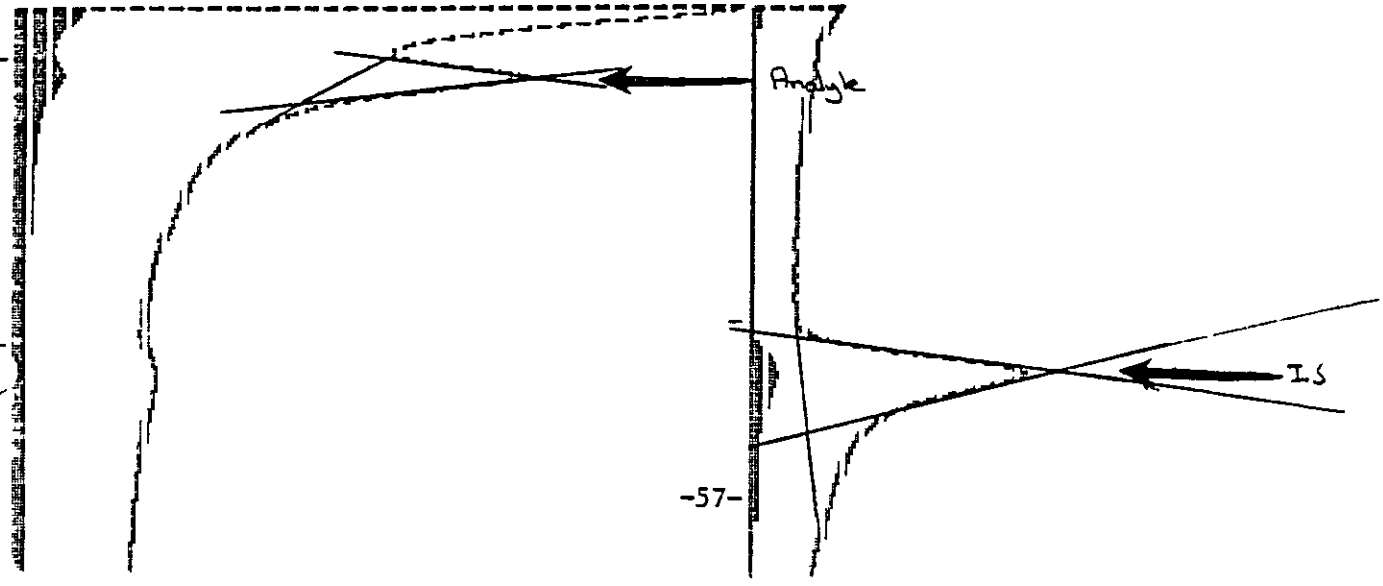

69531

CONFIDENTIAL
PROPERTY OF
MOBAY CHEMICAL CORPORATION
AGRICULTURAL CHEMICALS DIVISION

Sample & No _____ NBR 1162 76

25gm Control Kidney fortified with 0.1ppm

KWG 0519

Dates. Extraction 3-9-81 Injection 3 18 81

Response (Area mm² / Ratio) Sample/Std.

	Analyte	I.S.	Ratio
Sample	10.0 57.0 2 (285.0)	11.5 39.0 2 (224.3)	1.27
0.1ppm STD	9.0 72.0 2 (324.0)	11.0 48.0 2 (264.0)	1.23

+++ AMPLE IDENTITY # 4 00 dat 3 18 1+ 1 Wednesday

UN MA E. 1_7 00 161 00
DWELL TIME 400 00 400 00
MAXIMUM ABUNDANCE 14+ 1 60 1

UN 6 TOTAL RUN TIME = 6 4 AMOUNT INJECTED = 6 00

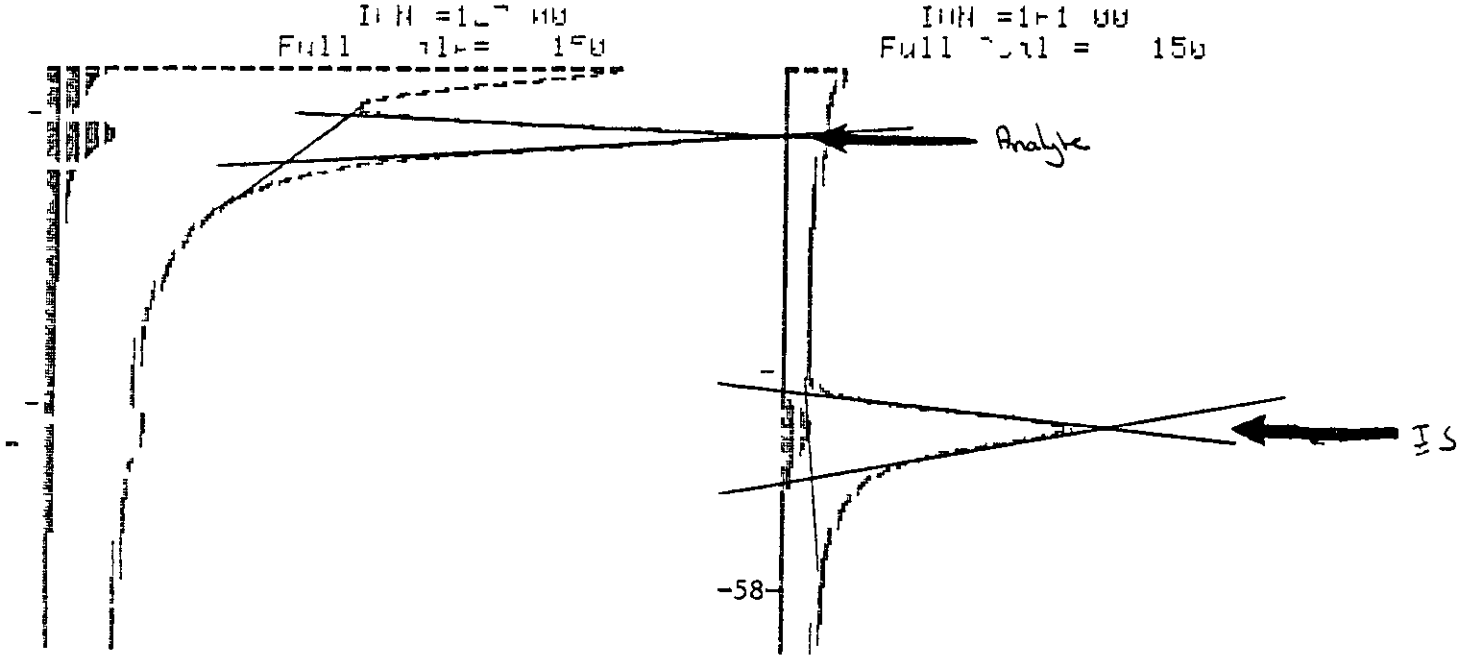

69531

CONFIDENTIAL

PROPERTY OF

MOBAY CHEMICAL CORPORATION
AGRICULTURAL CHEMICALS DIVISION

Sample & No _____ NBR H162 76

25gm Control Kidney fortified with 0.05ppm

KWG 0519

Dates Extraction 3-9-81 Injection 3-18-81

Response (Area mm² / Ratio) Sample/Std.

	Analyte	I.S.	Ratio
Sample	14.0 27.5 2 (192.5)	12.0 53.0 2 (318.0)	0.60
0.1ppm STD	9.0 72.0 2 (324.0)	11.0 48.0 2 (264.0)	1.23

++ AMPLE IDENTITY # 5 00 dated 3 10 1981 Wednesday

ION MA SE 127 00 161 00
ELL TIMES [illegible] 400 [illegible] 400 00
MA IMUM ABUNDANCE 135 59 [illegible] 30

RUN [illegible] TOTAL RUN TIME = 6 4 AMOUNT INJECTED = [illegible] 00

ION =127 00
Full Scale= 1 [illegible]
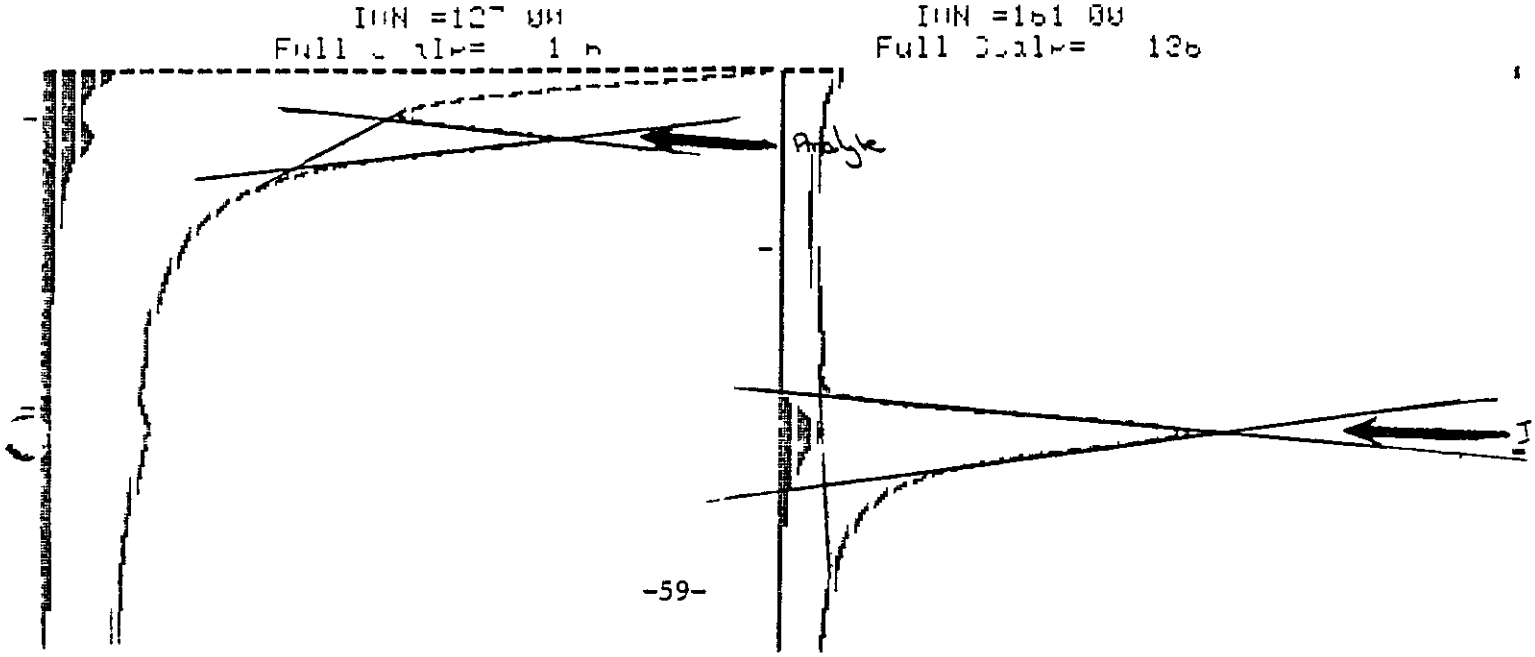
ION =161 00
Full Scale= 136