US EPA ARCHIVE DOCUMENT

United States
Environmental Protection
Agency

Office of Solid Waste
and Emergency Response
Washington, DC 20460

EPA/530-SW-88-003 b
December 1987

Solid Waste

EPA

Report to Congress

Management of Wastes from the Exploration, Development, and Production of Crude Oil, Natural Gas, and Geothermal Energy

Volume 2 of 3
Geothermal Energy

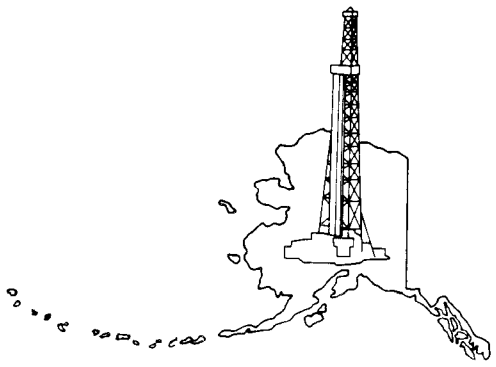

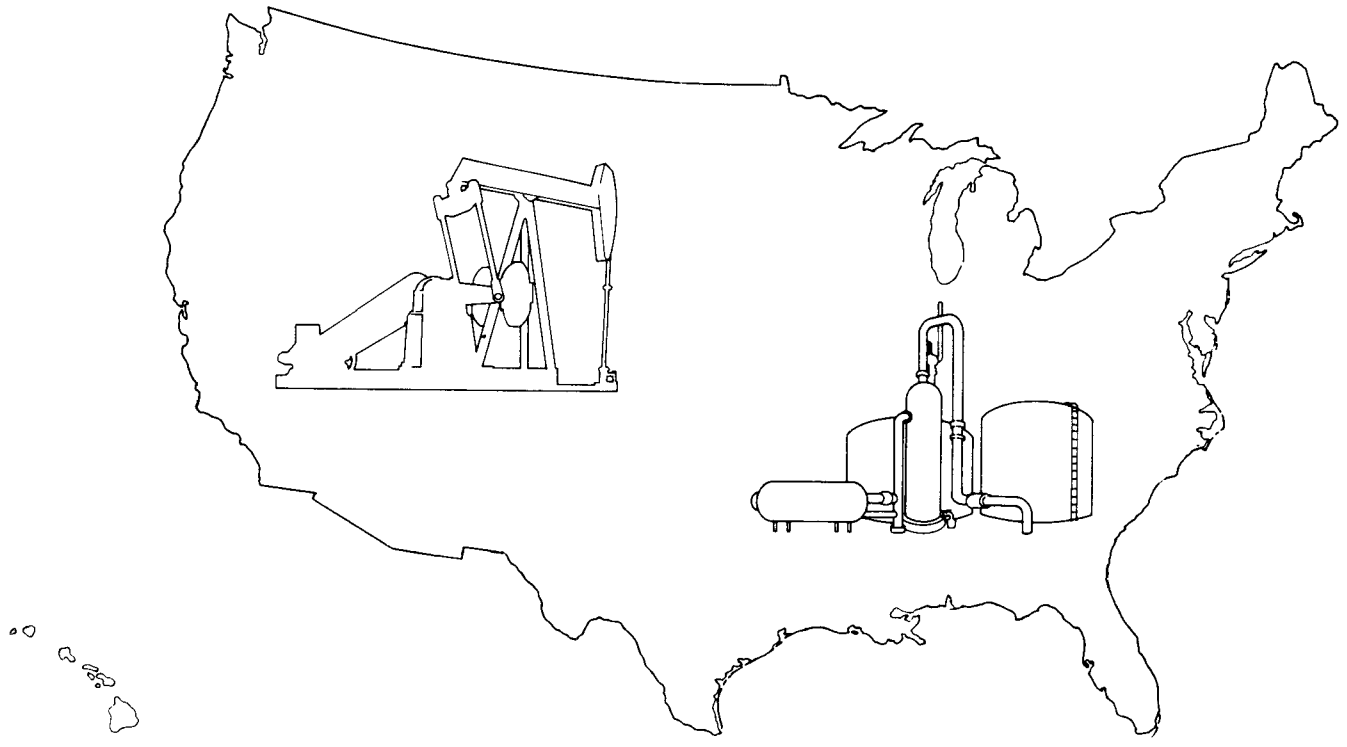

REPORT TO CONGRESS

MANAGEMENT OF WASTES FROM THE EXPLORATION, DEVELOPMENT, AND PRODUCTION OF CRUDE OIL, NATURAL GAS, AND GEOTHERMAL ENERGY

VOLUME 2 OF 3

GEOTHERMAL ENERGY

UNITED STATES ENVIRONMENTAL PROTECTION AGENCY

Office of Solid Waste and Emergency Response
Washington, D.C. 20460

U.S. Environmental Protection Agency
Region 5, Library (PL-12J)
77 West Jackson Boulevard, 12th Floor
Chicago, IL 60604-3590

December 1987

TABLE OF CONTENTS

CHAPTER	PAGE
CHAPTER I - INTRODUCTION	1
Statutory Requirements and General Purpose	1
Study Approach	2
Study Factors	3
CHAPTER II - DESCRIPTION OF GEOTHERMAL RESOURCES AND THE GEOTHERMAL INDUSTRY	9
Geothermal Resources Background	9
Exploration and Development Operations	11
Surface Exploration	11
Geothermal Well Drilling	13
Drilling Mud	14
Distribution of Geothermal Drilling Activity	17
Electrical Power Production Operations	17
Vapor-Dominated Systems	19
Liquid-Dominated Systems	21
The Flash Process	21
The Binary Process	24
Annual Production	25
Direct Use of Geothermal Energy	25
Downhole Heat Exchangers	25
Surface Heat Exchangers	28
Current Use	28
CHAPTER III - IDENTIFICATION AND CHARACTERIZATION OF EXEMPT WASTES	35
Discussion of Exempt vs. Nonexempt Wastes	35
Exploration and Development Wastes	36
Geothermal Power Plant Wastes	39
Spent Brine for Injection	40
Sludges from Brine Precipitation	42
Estimates of Waste Volumes	42
Waste Generation from Direct Users	43
Waste Characterization	43
Liquid Wastes	45
Solid Wastes	51
Analysis of Waste Constituents	56
Discussion of Data Adequacy	60

TABLE OF CONTENTS

CHAPTER	PAGE
CHAPTER IV - WASTE MANAGEMENT PRACTICES	63
Current Waste Management Practices	63
Waste Management Practices for Waste Products from Drilling Operations	63
Waste Management Practices for Power Generation Facilities	66
Direct Release to Surface Waters	67
Closed-Cycle Ponding	67
Injection of Liquid Wastes	67
Injection into a Nonproducing Zone	69
Treatment and Injection	69
Consumptive Secondary Use	70
Waste Management Practices for Direct Users	71
Alternative Waste Management Practices	71
Economic Analysis of Waste Management Practices	80
Cost Estimation Methodology	80
The Estimated Impact of Alternative Waste Management Practices	81
Forecast of Future Profitability for the Geothermal Industry	83
CHAPTER V - DAMAGES CAUSED BY GEOTHERMAL OPERATIONS	85
CHAPTER VI - RISK ASSOCIATED WITH GEOTHERMAL OPERATIONS	87
Introduction	87
Scope and Limitations	88
Characterization of Major Risk-Influencing Factors	89
Waste Streams	89
Produced Fluid Wastes	90
Production Fluid Wastes--Conventional Steam Cycle	92
Production Fluid Wastes--Binary Process	93
Production Fluid Wastes--Flash Process	95
Direct User Fluid Wastes	96
Drilling Pit Solid Wastes	96
Waste Management Practices	97
Production Fluid Wastes--Power Plants	99
Production Fluid Wastes--Direct Users	101
Drilling Pit Wastes	102
Environmental Settings	103
Qualitative Risk Assessment Results	104
Underground Injection--Produced Fluids	106
Power Plants	106

TABLE OF CONTENTS

CHAPTER	PAGE
Chapter VI - Continued	
Direct Users	108
Onsite Reserve Pits--Drilling Wastes	109
Conclusions	110
References	112
CHAPTER VII - CURRENT REGULATORY PROGRAMS	113
Federal Regulations	113
Regulatory Agencies	113
Geothermal Resources Operational Orders	113
Underground Injection Control Program	115
Summary of State Requirements	116
Regulatory Requirements	116
Summary of California's Geothermal Regulations	117
State Regulatory Agencies	117
Geothermal Regulations	117
Permits	123
Well Design	124
Solid and Liquid Waste Disposal	124
Liquid Waste Subsurface Injection	124
Surface Disposal--Water	125
Surface Disposal--Land	126
Well Plugging and Abandonment	129
Surface Restoration	129
CHAPTER VIII - CONCLUSIONS	131
CHAPTER IX - RECOMMENDATIONS	133
APPENDIX A - DATA MANAGEMENT	A-1
Data Sources	A-1
APPENDIX B - ABBREVIATIONS OF UNITS AND SCIENTIFIC TERMS USED IN THE FIGURES AND TABLES	B-1
APPENDIX C - GLOSSARY	C-1
APPENDIX D - REPORT BIBLIOGRAPHY	D-1

TABLES

CHAPTER II

		PAGE
II-1	Summary of Geothermal Drilling Activity by State from 1981 to 1985, Including Production, Injection, and Wildcat Wells	18
II-2	Site Listing--Power Plants	26
II-3	Site Listing--Direct Users	29

CHAPTER III

III-1	Estimated Waste Volumes for Drilling Activities Associated with Exploration and Development of Geothermal Resources	38
III-2	Estimated Liquid Waste Volumes from Both Binary and Flash Process Plants	41
III-3	Estimated Liquid Waste Volumes Resulting from Direct Use of Geothermal Energy	44
III-4	Power Plant Liquid Analysis Summary	46
III-5	Direct Users Liquid Analysis Summary	47
III-6	Liquid Waste: Test Well Brine Analyses	50
III-7	Metals Detected in the Extracts of Geothermal Brines	52
III-8	Solid Waste: Bulk Composition	53
III-9	Solid Waste Acid Extract: Bulk Composition	54
III-10	Solid Waste Neutral Extract: Bulk Composition	55
III-11	Solid Waste Acid Extract: Trace Analysis	57
III-12	Solid Waste Neutral Extract: Trace Analysis	58
III-13	Metals Detected in the Extracts of Geothermal Solid Wastes from the Imperial Valley Area	59

CHAPTER IV

IV-1	Waste Disposal Practices for Geothermal Power Generation Facilities	68
IV-2	Waste Disposal Practices for Direct Users	72
IV-3	Waste Management Practices	78
IV-4	Annualized Per Barrel Surface Impoundment Cost	82
IV-5	Total Annual Cost of Alternative Waste Management Practices	84

TABLES

CHAPTER VI

VI-1 Model Production Fluid Waste Stream Analyses 94
VI-2 Drilling Pit Solid Wastes: Bulk Composition 98
VI-3 Environmental Settings at Geothermal Energy Facilities 105

CHAPTER VII

VII-1 Summary of State Geothermal Regulations 118
VII-2 Summary of Waste Management Strategies for Discharges to Land 128

FIGURES

CHAPTER II PAGE

II-1 Known and Potential Geothermal Resources 12
II-2 Typical Rotary Drilling Rig 15
II-3 Typical Hydrothermal Well 16
II-4 Dry-Steam Schematic 20
II-5 Flashed-Steam Schematic 22
II-6 Binary Schematic 23

CHAPTER VI

VI-1 Exempt Wastes Generated from Geothermal Energy Industry Activities 91
VI-2 Waste Management Practices for Produced Geothermal Fluid Wastes 100

CHAPTER I

INTRODUCTION

STATUTORY REQUIREMENTS AND GENERAL PURPOSE

Under Section 3001(b)(2)(A) of the 1980 Amendments to the Resource Conservation and Recovery Act (RCRA), Congress temporarily exempted several types of solid wastes from regulation as hazardous wastes, pending further study by the Environmental Protection Agency (EPA). Among the categories of exempt wastes were "drilling fluids, produced waters, and other wastes associated with the exploration, development or production of crude oil or natural gas or geothermal energy." Section 8002(m) of the Amendments requires the Administrator to study these wastes and submit a final report to Congress. This publication is in partial response to those requirements. The report is divided into three volumes and an Executive Summary. Because of the many significant differences between the oil and gas and the geothermal energy industries, separate volumes have been devoted to each. Volume 1 covers the oil and gas industry; Volume 2 (this volume) covers the geothermal energy industry. Volume 3 provides summaries of State regulations and damage cases associated with the oil and gas industry, as well as a glossary of terms.

EPA failed to meet the Congressionally mandated deadline of October 1982 for submission of the final Report to Congress and later, to settle a suit brought by the Alaska Center for the Environment, signed a consent order obligating itself to submit the report on or before August 31, 1987. In April 1987, this deadline was extended by the court to December 31, 1987.

Since the passage of RCRA in 1976, Congress and the Agency have expressed growing concern over the problems involved in the development of a suitable approach for managing high volume solid wastes. Wastes now exempt from Subtitle C regulation by Section 8002 were originally included within a category of "special wastes" under earlier RCRA regulations. Under this classification, Subtitle C regulation was to be deferred, pending further study of the waste volumes, hazardous characteristics, and alternative management practices.

Following submission of the current study, and after public hearings and opportunity for comment, the Administrator of EPA must determine whether to promulgate regulations under the hazardous waste management provisions of RCRA (Subtitle C), or to declare that such regulations are unwarranted.

The recommendations contained in this report do not represent a regulatory determination, as such a determination is not required until June 1988. Moreover, in several important areas, the Agency has provided a number of optional approaches that will involve additional research and consultation with the States and other affected parties. It does not now recommend, nor does it foresee any future likelihood of recommending, wholesale imposition of Subtitle C regulation for the high volume wastes of concern in this study.

STUDY APPROACH

EPA has endeavored to respond to all of the study factors cited in Section 8002(m). For clarity, this report has been designed to respond specifically and individually to each study factor within separate chapters or subsections of this volume. Although each study factor was taken into consideration during the course of this study, no single study factor influenced its conclusions and recommendations.

The following paragraphs define the study factors and introduce the methodologies used to analyze them with respect to the geothermal industry. More detailed methodological discussions can be found later in this report.

STUDY FACTORS

The principal study factors are listed in subparagraphs (A) through (G) of Section 8002(m). The introductory and concluding paragraphs of the section, however, also contain directives to the Agency on what should be included in the present analysis. This study has therefore been organized to respond to the following interpretation of the statutory requirements.

Study Factor 1 - Defining Exempt Wastes

RCRA describes the exempt wastes in rather broad terms. The Agency has thus largely relied on the legislative history of the amendments, which provides guidance on the definition of "other wastes." Where the legislative history does not provide guidance, EPA has had to make assumptions and interpretations. These assumptions are set forth in detail in Chapter III, "Identification and Characterization of Exempt Wastes."

Study Factor 2 - Specifying the Sources and Volumes of Exempt Wastes

In response to subparagraph (A), EPA has prepared estimates of the sources and volumes of all exempt wastes. The results of this analysis are presented in Chapter III. Unfortunately, statistics on the volumes of exempt wastes from geothermal operations are not routinely collected nationwide. However, estimates of total volumes produced can be reached indirectly through a variety of approaches. This report presents the approaches used for these estimates.

Study Factor 3 - Characterizing Wastes

While Section 8002(m) does not explicitly call for a laboratory analysis of the exempt wastes, the Agency considers such a review a necessary and appropriate element of this study. Analysis of the principal high volume wastes can help to determine whether any of the wastes could be considered hazardous under the definitions of RCRA Subtitle C. Of the four RCRA tests to determine hazardousness (toxicity, ignitability, corrosivity, and reactivity), this study is primarily concerned with toxicity, the factor most likely to contribute to potential health and environmental damage under field conditions.

Study Factor 4 - Describing Current Disposal Practices

Subparagraph (B) calls for an analysis of current disposal practices for exempt wastes. Chapter IV, "Waste Management Practices," summarizes EPA's review, which was based on a number of sources. In addition to reviewing the technical literature, EPA sent representatives to geothermal sites of the major geothermal production areas to discuss current methods and technologies. State and local regulatory agencies were also contacted to obtain information on their rules and recommendations for disposal of geothermal energy wastes.

The purpose here has not been to compile an exhaustive technological review of waste management technologies used by the geothermal industry. As stressed throughout this volume, conditions and methods vary from region to region and operation to operation. Thus, the intention of this volume is to list and describe the principal methods of managing field-generated wastes, and to discuss these practices in general and qualitative terms.

Study Factor 5 - Documenting Evidence of Damage to Human Health and the Environment Caused by Management of Geothermal Wastes

Subparagraph (D) requires EPA to analyze "documented cases" of health and environmental damage related to surface runoff or leachate. No significant damage cases resulting from geothermal energy operations were found.

Study Factor 6 - Assessing Potential Danger to Human Health or the Environment from the Wastes

Paragraph (C) requires an analysis of the potential dangers of surface runoff and leachate. These possible effects can involve all types of damages over a long period of time, and are not necessarily limited to the categories of damages for which documentation is available.

There are several methods of estimating potential damages. EPA used a qualitative approach, based on traditional environmental assessment techniques, in responding to this study factor in Chapter VI, "Risk Associated with Geothermal Operations." Overall, the Agency felt that the quantity and quality of data available did not warrant a quantitative risk modeling approach at this time.

The goal of the qualitative risk assessment has been to define those factors that are most important in causing or averting environmental damages from field operations. The traditional environmental assessment procedures require no modification in order to be applied here.

The results of the modeling analysis have no statistical significance in terms of either the pattern or the extent of damages projected. Resources were available to model only a subset of prototype

situations, designed to roughly represent significant variations in conditions across the country. The results are very useful, however, for characterizing the interactions of technological, geological, and climatic differences as they influence the potential damages, and have been used accordingly in reaching the conclusions of this study.

Study Factor 7 - Reviewing the Adequacy of Government and Private Measures to Prevent and/or Mitigate Any Adverse Effects

Paragraph (1) requires that if the Agency concludes that there are adverse effects associated with the current management of exempt wastes, its conclusions must consider the adequacy of the means currently being used by the geothermal industry and government agencies to dispose of or recycle wastes or to prevent or mitigate those adverse effects.

Neither the damage case assessment nor the risk assessment could provide statistically valid data on the extent of damages, making it impossible, even if resources were available, to compare damages in any quantitative way to the presence and effectiveness of control efforts. The Agency's response to this requirement is therefore based on a qualitative assessment of all the materials gathered during the preparation of this report, as well as on the review of State regulatory programs presented in Chapter VII, "Current Regulatory Programs." The approach in Chapter VII has been to review existing regulatory programs in order to highlight areas of coverage and approaches to implementation.

Study Factor 8 - Defining Alternatives to Current Waste Management Practices

Subparagraph (E) requires EPA to analyze alternatives to current disposal methods. A discussion of this study factor is incorporated in Chapter IV, "Waste Management Practices."

This chapter merges the concepts of current and alternative waste management practices. Waste management technology in this field is fairly simple as no significant "innovative" or "emerging" technologies are currently in the research or development stage. Future improvements in waste management in these industries, therefore, must be based on more effective use of existing approaches, either through better implementation and maintenance practices or through more stringent application of available treatment techniques.

Study Factor 9 - Estimating the Costs of Alternative Practices

Subparagraph (F) calls for analysis of the costs of alternative practices. Chapter IV presents the Agency's analysis of this study factor.

Because this industry does not plan to initiate alternative waste management practices, EPA had to postulate a number of alternative approaches, many of which are merely more stringent applications of current practices. These alternatives have been included solely for informational purposes, not because the Agency feels there is a need for more rigorous approaches.

Study Factor 10 - Estimating the Economic Impacts of Alternative Practices on Industry

In response to the requirements of subparagraph (G), sections of Chapter IV present the Agency's analysis of the potential economic impacts of nationwide imposition of the alternative practices.

Because of this lack of alternatives, both the cost and the economic impact analyses used in this report are admittedly broad. In addition, reviewers have noted that significant variations influence the economics of this industry; these variations, such as the costs of fossil fuels and alternative fuels, make it difficult to generalize about impacts on either the project or the national level. Thus, it is difficult to draw conclusions concerning the current and future impacts of modified waste management practices.

CHAPTER II

DESCRIPTION OF GEOTHERMAL RESOURCES AND THE GEOTHERMAL INDUSTRY

GEOTHERMAL RESOURCES BACKGROUND

The crust and the atmosphere of the earth account for less than one-half of one percent of the total mass of the earth. The remaining 99.5 percent lies beneath the crust. Scientific knowledge of the material beneath the crust results largely from the study of seismicity and measurements of the heat-flow from the earth's interior toward the surface. This knowledge has allowed geophysicists to construct a clear and consistent model of the internal structure of the earth. The currently accepted model of the earth's internal structure consists of four concentric spheres. From the outermost to the innermost, they are the crust, the mantle, the liquid core, and the innermost core. It is thought that temperatures and densities rise rapidly as the center of the earth is approached.

The term "geothermal energy" can be defined as heat energy stored in the earth. The U.S. Geological Survey estimates that about 1.2 million quads (a quad is a unit of heat energy, equal to one thousand trillion British Thermal Units) of geothermal energy resources exist in the uppermost 10 kilometers of the crust. The resource is represented by that small fraction of the earth's volume in which high-temperature crustal rocks, sediments, volcanic deposits, water, steam, and other gases occur at accessible depths from the earth's surface, and from which heat can be economically extracted now or in the future. Although small, this portion of the earth's volume is an enormous reservoir of thermal energy.

Many geologists and engineers classify geothermal energy systems into four major categories:

- Hot igneous systems - created by the buoyant rise of molten rock (magma) from deep in the crust. In hot igneous systems, the rock is either completely or partly molten (greater than 650°C).

- Hot dry rock systems - heated impermeable rock that may or may not have been molten at one time (less than 650°C).

- Geopressured systems - characterized by the presence of hot fluids under high pressure, containing dissolved hydrocarbons, usually found in deep sedimentary basins with a low level of compaction and a relatively impermeable caprock. These systems reach moderately elevated temperatures (90° to 200°C).

- Hydrothermal systems - usually found in porous sedimentary rock or in fractured rock systems, such as volcanic formations. The two classes are vapor-dominated systems, which contain mostly steam (180° to 200°C), and liquid-dominated systems (30° to 350°C).

The first three categories contain the most heat energy, but they are not economically or technologically exploitable at this time. Federal research programs are currently directed at removing these hindrances.

The fourth category, hydrothermal systems, has received the most attention because the technology exists to economically extract energy from these systems. Hydrothermal systems consist of high-temperature water and/or steam trapped in porous and permeable reservoir rocks. The convective circulation of water and steam through networks of faults and fractures causes heat to rise. The heat available in the geothermal reservoir rock is produced by wells that bring hot water and/or steam to the surface.

The locations of hydrothermal and geopressured resource areas are shown in Figure II-1. Identified hydrothermal systems with temperatures greater than or equal to 90°C (194°F) are located primarily in the western United States, while low-temperature geothermal waters are found in the West, as well as in the central and eastern United States. Accessible hot dry rock resources are found in young volcanic centers in the West. Magma resources are generally limited to areas of recent volcanism in the western States, Alaska, and Hawaii.

EXPLORATION AND DEVELOPMENT OPERATIONS

Surface Exploration

The objective of any geothermal exploration program is to locate geothermal resource systems from which energy can be profitably extracted. Rapid, low-cost surface reconnaissance techniques are employed in the early stage of exploration to screen large land areas for commercial potential. Surface reconnaissance may include geophysical, geological, geochemical, and remote-sensing surveys.

A wide variety of geophysical methods are used for surface geothermal exploration. The objectives of using geophysical methods are to identify certain geophysical characteristics, such as electromagnetic or gravitational anomalies, or attenuation of seismic waves, which arise from contrasts in rock characteristics inside and outside of the geothermal systems (Hochstein 1982). The geophysical methods selected depend primarily on the type of geothermal system being explored.

Surface geological methods apply where geothermal leaks in the earth's surface occur. Surface features such as fumaroles, hot springs, warm springs, geysers, mud volcanoes, and mud pots are the most direct and obvious indicators of the presence of subsurface geothermal

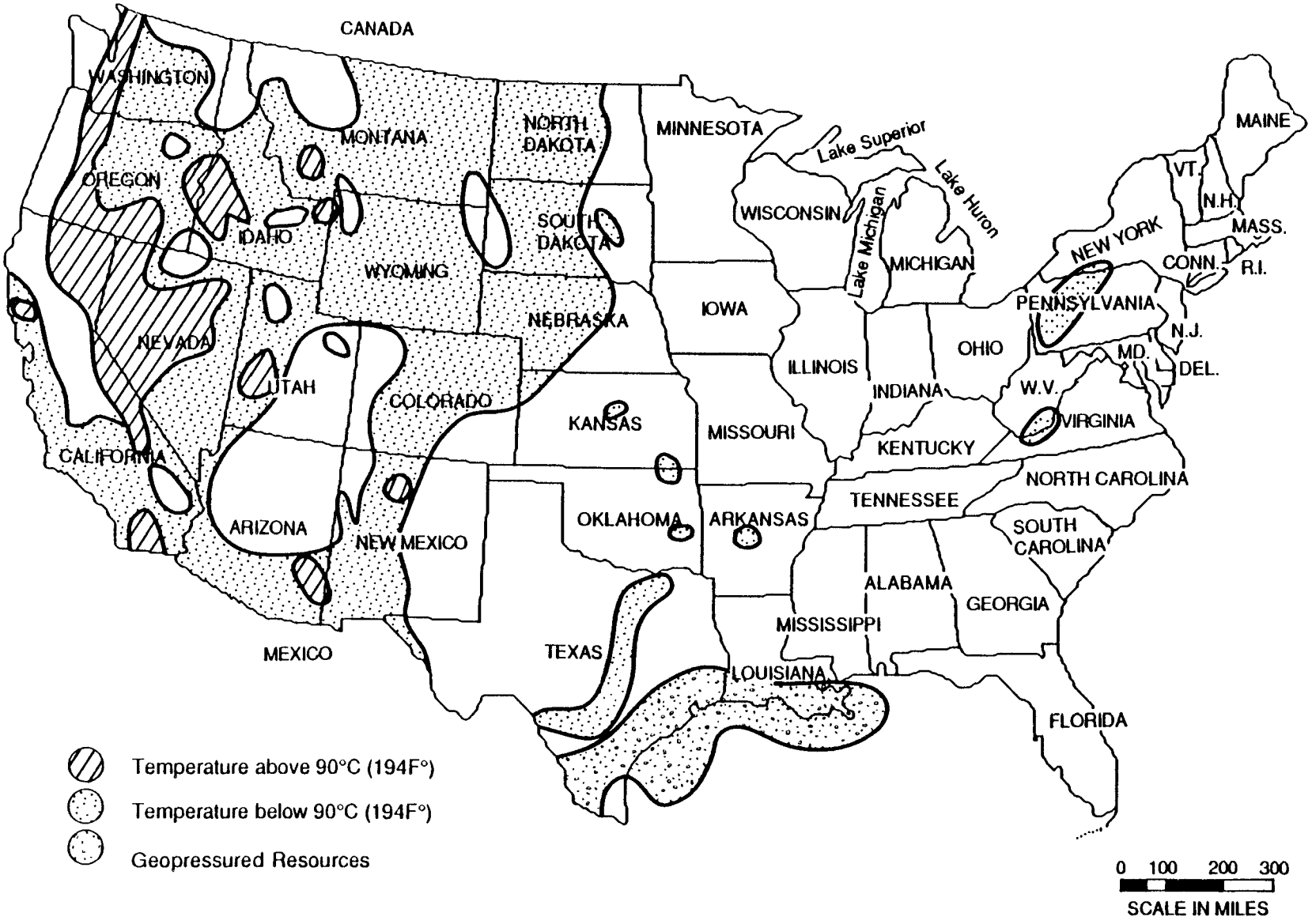

Figure II-1 Known and Potential Geothermal Resources

reservoirs. Seeps can provide quantitative information on the nature of these reservoirs and their contained fluids.

Geochemical exploration involves field and laboratory activities that focus on determining the composition of geothermal liquids and gases by obtaining and analyzing representative samples. Geochemical activities also include the prevention of scale deposition, methods for removing scale accumulations, and techniques for rendering geothermal liquids suitable for subsurface disposal. Examples of geochemical activities are the application of chemical geothermometers, measurement of gas emanations, and quantitative petrographic analyses from the subsurface, as well as samples of surface outcrops.

Remote-sensing technology, such as infrared imagery, is used to identify potential geothermal resources. In areas of known geothermal potential, remote sensing helps to identify surface features such as faults and joints, and thus aids in the design of more efficient drilling programs.

Geothermal Well Drilling

Wells are drilled after potential geothermal resources are identified. Initial exploratory drilling is undertaken to confirm the existence of the geothermal resource, and to determine its extent and its physical and chemical characteristics. When a commercially producible resource is confirmed, further drilling may be required for development and use. Methods and equipment used for geothermal well drilling are similar to those used in the petroleum industry.

Figure II-2 shows a typical drilling rig. Drilling difficulties, such as low penetration rates and short bit lives, result from the elevated temperatures and hard rocks encountered in typical geothermal

reservoirs (Varnado, et al. 1981). Federal research programs such as the Geothermal Hard Rock Penetration Program and the Salton Sea Scientific Drilling Program have contributed to the development of improved hardware that is better able to withstand the harsh subsurface environment (Varnado, et al. 1981; Wallace, et al. 1987).

One of the most important factors in the construction of a production well is the provision of high quality steel casing. The casing supports the borehole wall and prevents fluid migration, which could lead to ground-water contamination. Figure II-3 is a diagram of a completed liquid-dominated hydrothermal well with installed casing. As many as four concentric casings can be installed in a single well. Each casing is usually fixed with cement to the surrounding rock matrix to provide additional support.

Drilling Mud

The drilling fluid, usually mud, is a formulation of clay and chemical additives, such as caustic soda or other materials, in a water base. This fluid is pumped from a mud pit or tank (Figure II-2) down through the drill string and circulated up through the annulus (i.e., between the drill pipe and the wall of the hole). After removal of drill cuttings, which are fragments of rocks dislodged by the drill bit, the mud may be directed to a cooling tower or tank if excessive heating has occurred downhole. After cooling, the mud is returned to the mud pit or tank for recirculation.

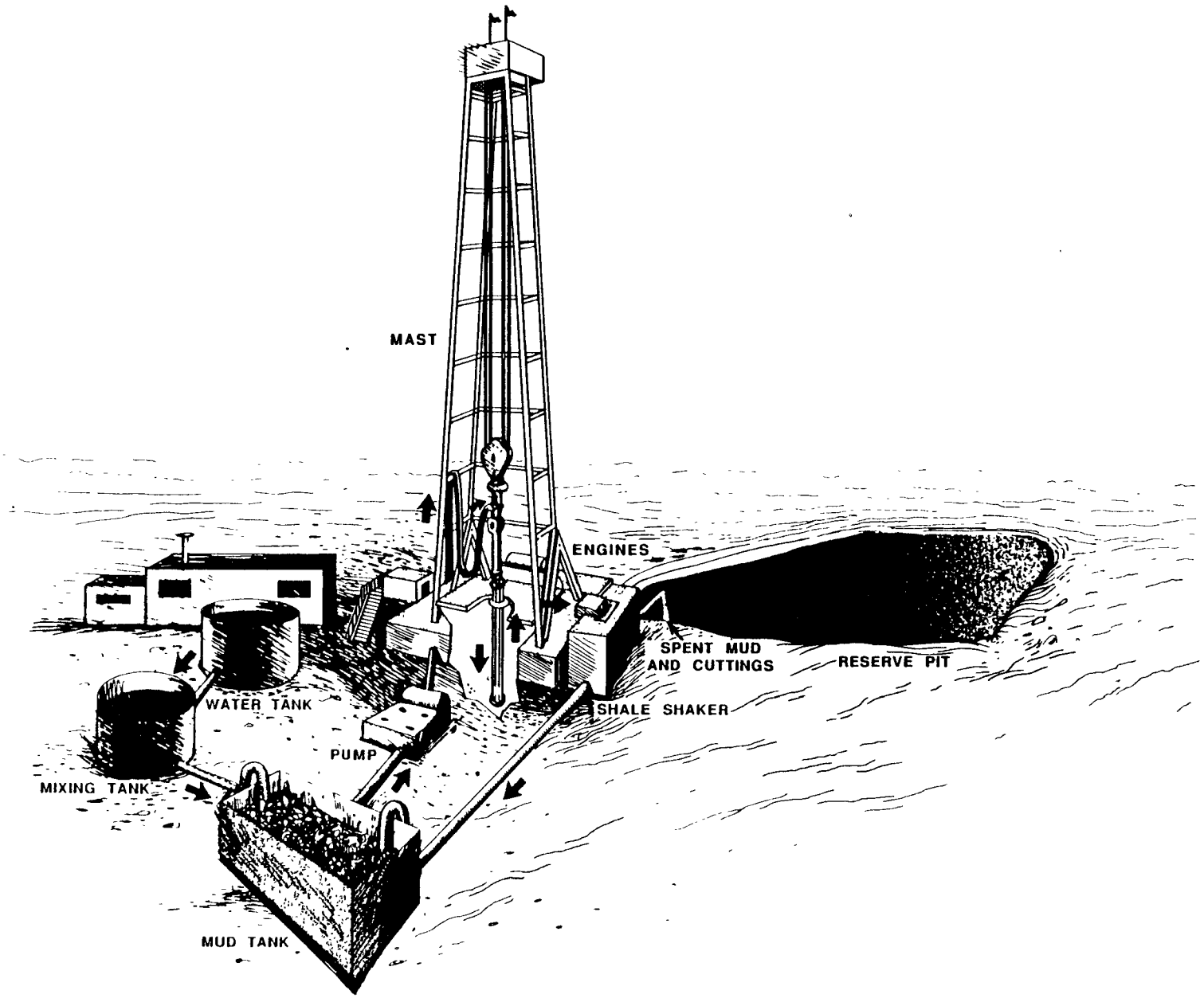

Figure II-2 Typical Rotary Drilling Rig

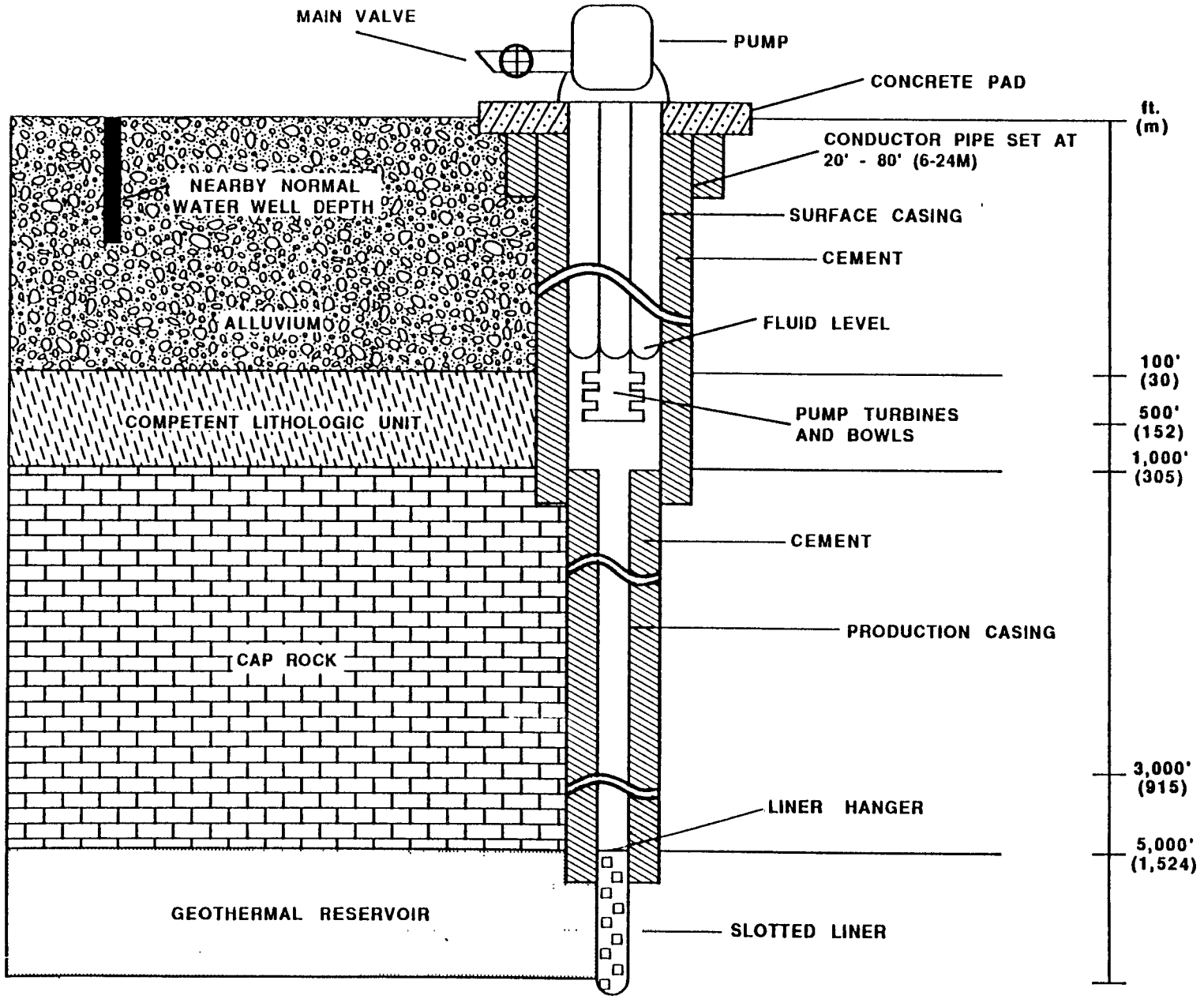

Figure II-3 Typical Hydrothermal Well (Source: USDOE 1981)

Drilling mud serves multiple purposes. It cools and lubricates the drill bit, flushes rock chips from the borehole, and helps prevent blowouts. The proper selection and management of drilling fluid are essential to geothermal drilling operations.

The drilling fluids used for penetrating vapor-dominated and liquid-dominated systems may be similar; however, compressed air rather than mud is sometimes used as the circulating medium for vapor-dominated systems because water-based muds can solidify and damage the producing formation. Liquid-dominated systems are usually drilled with conventional drilling muds containing high-temperature additives and, at times, lost circulation material. Ninety percent of muds are composed of bentonite and water or bentonite and lignite (Robinson 1987). Various types of drilling muds may be used, but the type and composition of the mud depend largely upon the downhole conditions. After the drilling operations are completed, the used drilling fluids constitute the major waste source.

Distribution of Geothermal Drilling Activity

Table II-1 presents data on the locations of geothermal drilling activities in the United States during the years 1981 through 1985 (Williams 1986). Thermal gradient holes, which are holes drilled to measure the temperature profile, are not included in this tabulation. As shown in the table, California has, by far, the most activity. The Geysers and Imperial Valley are the primary development sites.

ELECTRICAL POWER PRODUCTION OPERATIONS

There are economically viable methods for producing electrical power from either vapor- or liquid-dominated systems. The high-temperature steam found in vapor-dominated hydrothermal systems can be used directly

Table II-1 Summary of Geothermal Drilling Activity by State from 1981 to 1985, Including Production, Injection, and Wildcat Wells

Number of wells

	1981	1982	1983	1984	1985	Total
Alaska	-	4	-	-	-	4
California	55	67	47	88	64	321
Colorado	1	-	-	-	-	1
Hawaii	2	1	-	-	-	3
Idaho	6	-	3	-	-	9
Louisiana	1	-	-	-	-	1
Montana	-	1	1	-	-	2
New Mexico	6	3	3	-	-	12
Nevada	14	2	4	3	3	26
New York	-	1	-	-	-	1
Oregon	3	-	1	-	1	5
Texas	-	1	1	-	-	2
Utah	-	2	1	2	-	5
Washington	2	1	-	-	-	3
Total	90	83	61	93	68	395

Source: Williams 1986.

to generate electricity. The hot, saline waters found in liquid-dominated systems can transfer heat to a secondary working fluid or be converted to steam by a flashing process.

Vapor-Dominated Systems

The Geysers in California is the largest geothermal electrical generating complex in the world. It is also the best known vapor-dominated hydrothermal reservoir under commercial development and operation in the United States.

Electrical power is generated from a vapor-dominated system, such as The Geysers, using the conventional steam cycle (see Figure II-4). The steam from a vapor-dominated system is piped from the production well to a manifold where it provides direct power to drive the turbine generator. Production wells are connected to a gathering system composed of carbon steel pipes. A separator is located on the main steam line to remove solids from the steam prior to entry into the turbine. Approximately 2,000 pounds per hour of steam are required to generate one megawatt. Thus, over one million pounds of steam per hour (a low estimate) is needed to power one 55-megawatt plant (USDOE 1980a). The number of wells required to supply this amount of steam depends upon the individual production from each well. Typically, 10 to 14 wells are required per 55-megawatt plant.

The exhaust steam from the turbine is condensed, then the condensate is pumped to a cooling tower where it is cooled and reused as a cooling medium. The cooling tower acts as a concentrating unit for dissolved solids in the condensate. The excess condensate is processed to remove suspended solids. The condensate, which now contains a limited amount of solids, is injected into the geothermal reservoir, and the resulting sludge from the pit is dewatered. The disposal method for the filter

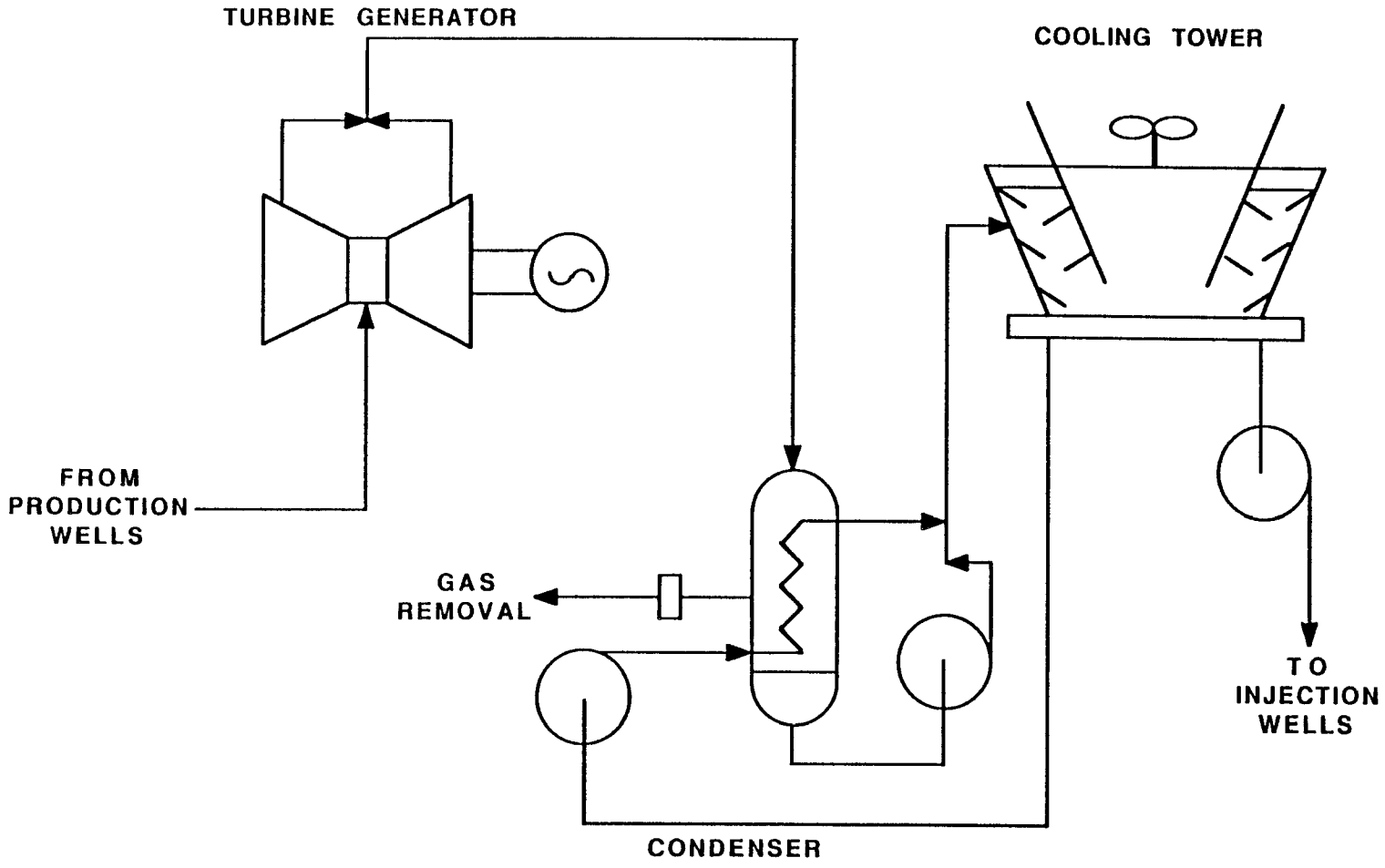

Figure II-4 Dry-Steam Schematic (Source: DOE 1986)

cake from the dewatered sludge is determined by the applicable State regulations.

The electrical generating capacity at The Geysers surpassed 1,000 megawatts late in 1982 when Pacific Gas and Electric Company (PG and E) Unit 17 began operation (California Division of Oil and Gas, 1983). In 1985, four power plants were brought on-line at The Geysers geothermal field:

- PG and E Units 16 and 20 (each generating 113 megawatts, net);
- The California Department of Water Resources Bottle Rock Power Plant (generating 52 megawatts, net); and
- The Northern California Power Agency (NCPA) #2 (Unit 2, generating 110 megawatts, net).

Today, 24 plants generate 1,800 megawatts at The Geysers. Unocal, the major steam supplier, and the other four field operators are responsible for the extraction of steam from The Geysers geothermal reservoir and injection of any returned condensate (Morton 1986).

Liquid-Dominated Systems

Two processes are commonly used to produce electricity from liquid-dominated geothermal reservoirs: the flash process and the binary process. Figures II-5 and II-6, respectively, present flow diagrams of these two processes.

The Flash Process

The flash process uses the conventional steam cycle in which geothermal brine is "flashed" to produce the steam. The flash process is the partial evaporation to steam of the hot liquid brine by the sudden reduction of pressure in the system. The steam from the flash step is

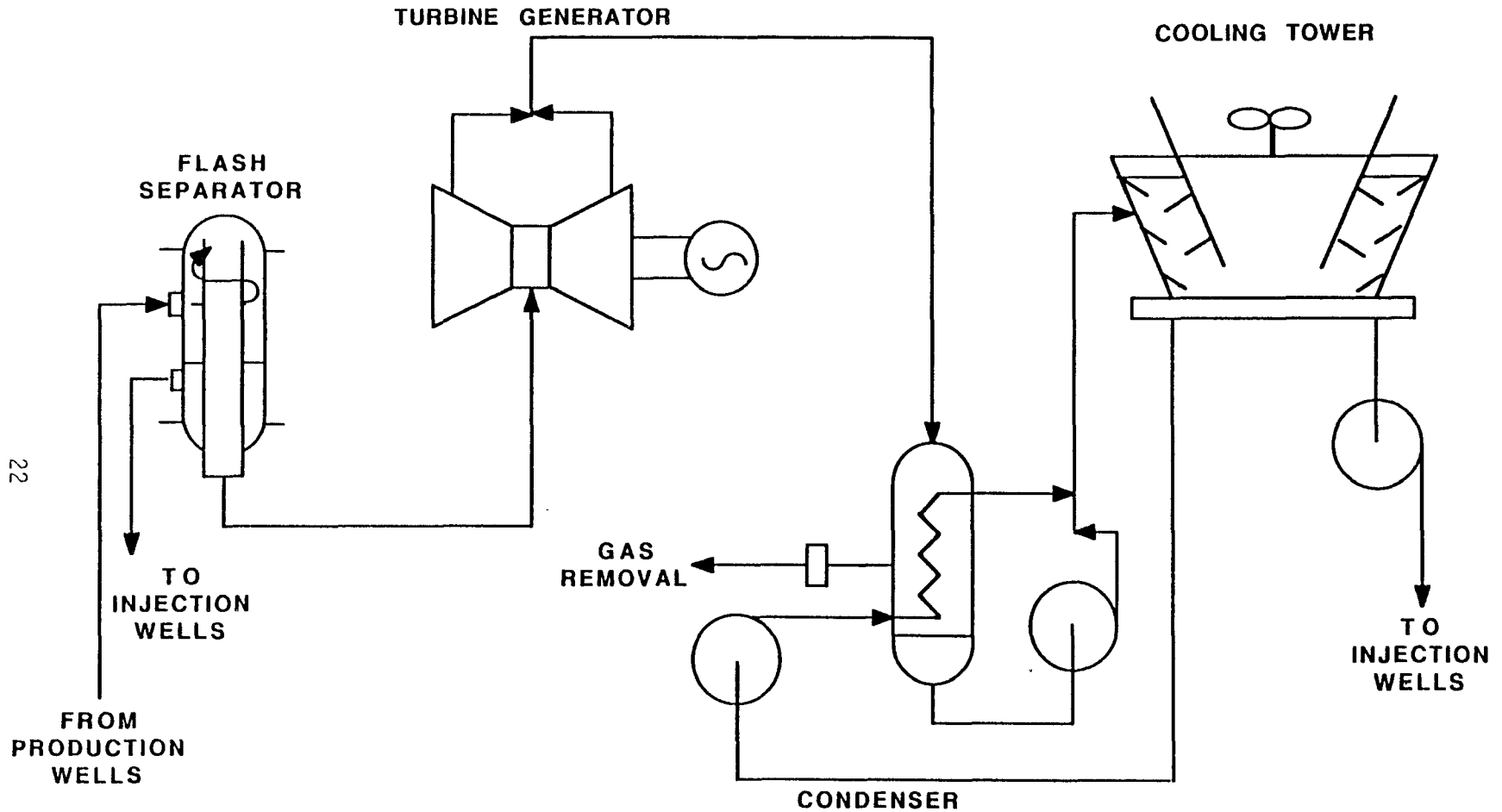

Figure II-5 Flashed-Steam Schematic (Source: DOE 1986)

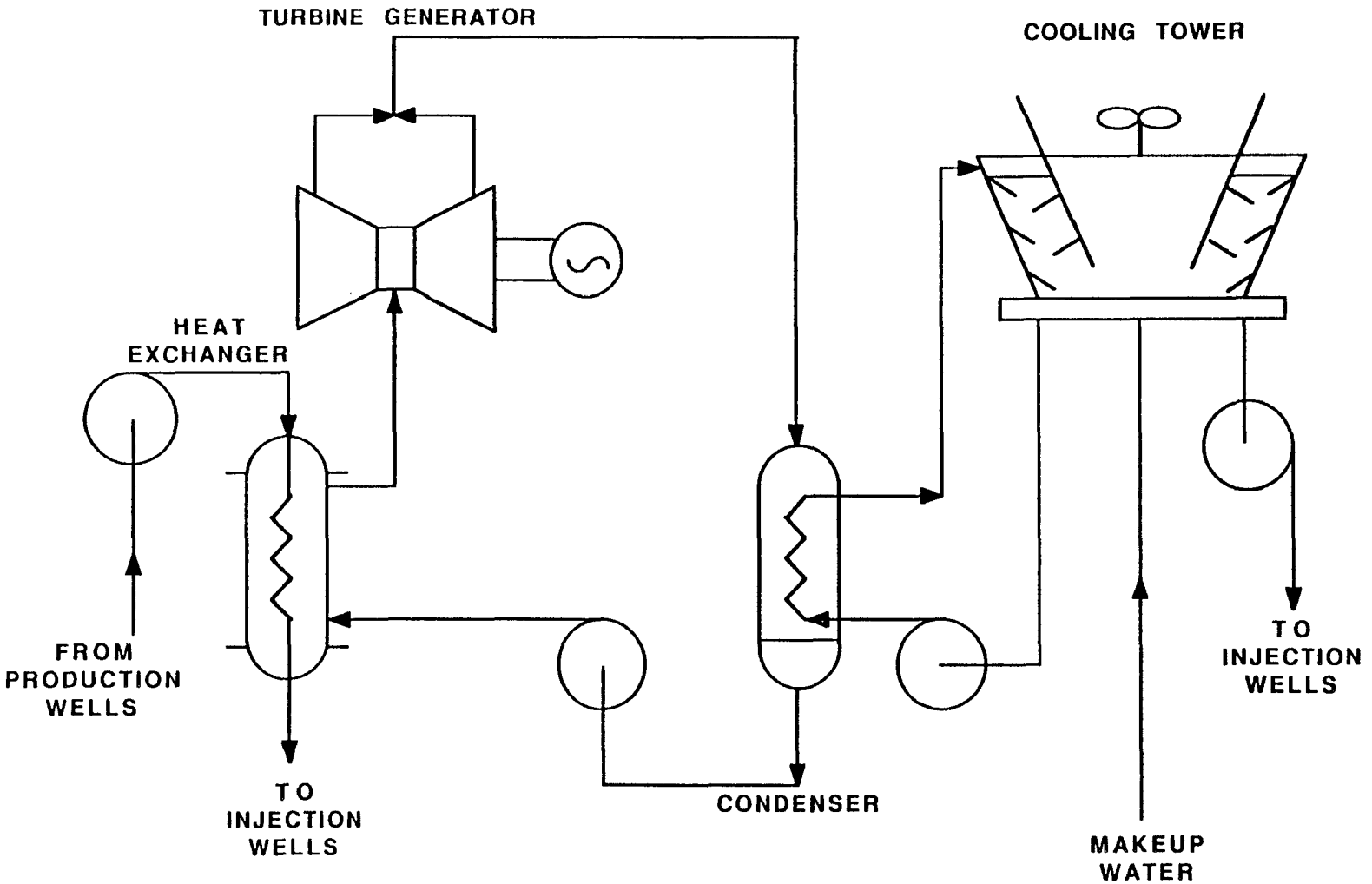

Figure II-6 Binary Schematic (Source: DOE 1986)

fed directly into the turbine, with subsequent usage and disposal as described in the subsection on vapor-dominated systems.

The Vulcan Power Plant in California's Imperial Valley, owned by the Magma Power Company, is an example of a liquid-dominated system that uses a flashing process to generate electricity. The power plant is designed to produce 35 megawatts, net, of electricity from the high-temperature, highly saline geothermal fluid in the Salton Sea area.

The Binary Process

The 45-megawatt Heber Demonstration Plant, also in California's Imperial Valley, is the largest binary power plant in the world (California Division of Oil and Gas 1985). The Heber Plant uses a simple binary-cycle conversion process consisting of three fluid loops: a geothermal fluid loop, a hydrocarbon working-fluid loop, and a cooling water loop. The binary process uses brines in the 150° to 210°C (320-410°F) range.

The geothermal fluid is withdrawn from the reservoir into the production well. The geothermal brine passes through two parallel brine/hydrocarbon heat exchangers at the rate of about 8 million lb/h.

The brine and hydrocarbon are contained in separate closed loops, allowing no direct contact with the atmosphere. The hydrocarbon vapor expands through the turbine, which drives the 70-megawatt electric generator. Spent brine is injected into the geothermal reservoir at about 72°C (162°F). The brine temperature must be kept above 65°C (149°F) to prevent precipitation of dissolved solids prior to injection. Brine that passes through the turbine and brine that passes only through the heat exchanger and is then directly injected are exempt wastes.

Annual Production

Table II-2 lists 25 geothermal power facility sites that are either operating or are under construction in the United States. A "site" is defined as either a single power plant or a multiple operating unit. For example, power-generating facilities at The Geysers are shown as five different sites, although these five sites contain 25 operating units, owned by five different power companies. Ninety-six percent of the geothermal power plant electrical capacity is found in California alone; the remaining four percent is distributed throughout other States.

DIRECT USE OF GEOTHERMAL ENERGY

In some areas of the country, it is often efficient and economical to use geothermal energy as a direct source of heat. This heat can be extracted from the condensate from an electrical generating facility or directly from a geothermal production well. Direct applications require less capital than do power plants and can be developed on a relatively small scale; therefore, they are more common. The high cost of transporting available heat to the point of use has limited the development of multiuser direct heat systems to areas near geothermal sources. The two most common types of direct application of geothermal energy are downhole heat exchangers and surface heat exchangers.

Downhole Heat Exchangers

Some 400 to 500 shallow wells are used for space heating in the Klamath Falls and Klamath Hills, Oregon, geothermal areas (Geonomic 1978; Lienau 1986). These wells provide heat for about 500 homes, offices, commercial buildings, schools, churches, and greenhouses (Lienau 1986). Typically, well temperatures range from 38° to 110°C (100° to 230°F). Most of the wells use downhole heat exchangers, which consist of one- or two-tube loops suspended in the wellbore, in direct

TABLE II-2 SITE LISTING POWER PLANTS

NAME	OWNER	ST/COUNTY	PROCESS TYPE	ELECTRICAL CAPACITY (MW)
EAST MESA	ORMAT	CA IMPERIAL	LPB	12 00 UC
EAST MESA	ORMAT	CA IMPERIAL	LPB	24 00 OP
EAST MESA (B C MCCABE NO 1)	MAGMA POWER CO	CA IMPERIAL	LPB	12 50 OP
HEBER	HEBER GEOTHERMAL CO	CA IMPERIAL	LPF	47 00 OP
HEBER	SDG&E BINARY DEMO	CA IMPERIAL	LPB	45 00 OP
SALTON SEA	UNOCAL	CA IMPERIAL	LPF	15 00 OP
SALTON SEA (VULCAN)	MAGMA POWER CO	CA IMPERIAL	LPF	34 50 OP
CO O	CALIFORNIA ENERGY CO	CA INYO	LPF	25 00 OP
WENDELL AMEDEE(HONEY LAKE)	GEOPRODUCTS	CA LASSEN	LPH	20 00 UC
WENDELL-AMEDEE (WENDELL HOT SPRINGS)	WINEAGLE DEVELOPER	CA LASSEN	LPB	0 60 OP
MONO LONG VALLEY (GAS DIABLO)	MAMMOTH PACIFIC	CA MONO	LPB	7 00 OP
THE GEYSERS	PACIFIC GAS & ELECTRIC CO	CA SONOMA	VPS	1560 00 OP
THE GEYSERS	SACRAMENTO MUNICIPAL UTILITY DISTRICT	CA SONOMA	VPS	72 00 OP
THE GEYSERS	NORTHERN CALIFORNIA POWER AGENCY	CA SONOMA	VPS	220 00 OP
THE GEYSERS (BOTTLE ROCK)	CALIFORNIA DEPT OF WATER RESOURCES	CA SONOMA	VPS	55 00 OP
THE GEYSERS	FREEPORT MACMORAN	CA SONOMA	VPS	80 00 OP
THE GEYSERS	SANTA FE GEOTHERMAL	CA SONOMA	VPS	80 00 OP
THE GEYSERS	CCPA	CA SONOMA	VPS	150 00 UC
PUNA NO 1	HELCO	HI HAWAII ISLAND	LPF	3 00 OP
LIGHTING DOCK	BURGETT FLORAL	NM HIDALGO	LPB	0 90 OP
BRADY HAZEN	CHEVRON	NV CHURCHILL	LPB	8 30 OP
DIXIE VALLEY - OXBOW	OXBOW GEOTHERMAL	NV CHURCHILL	LPF	50 00 UC
FISH LAKE	STEAM RESERVE CORP	NV ESMERALDA	LPB	15 00 UC
BEOWAWE	CRESCENT VALLEY GEOTHERMAL (SUBSID OF SCE)	NV LANDER/EUREKA	LPF	17 00 OP

TABLE II-2 (continued)

NAME	OWNER	ST/COUNTY	PROCESS TYPE	ELECTRICAL CAPACITY (MW)
WABUSKA HOT SPRINGS	TAD'S ENTERPRISES	NV LYON	LPB	0 60 OP
DESERT PEAK	CHEVRON/SIERRA PACIFIC POWER CO	NV RENO	LPF	9 00 OP
STEAMBOAT SPRINGS	GEOTHERMAL DEVELOPMENT ASSOCIATES	NV WASHOE	LPB	5 40 OP
COVE FORT - SULPHURDALE	MOTHER EARTH INDUSTRIES, CITY OF PROVO	UT BEAVER	LPE	4 70 OP
ROOSEVELT HOT SPRINGS - MILFORD	UP&L	UT BEAVER	LPF	20 00 OP

KEY FOR PROCESS TYPE

First Letter	Second Letter	Third Letter	Electrical Capacity
V-Vapor	P-Power Generation	F-Flash Process	MW-Megawatts
L-Liquid		B-Binary Process	OP-Operating
		S-Conventional Steam	UC-Under Construction
		H-Hybrid	

contact with the hydrothermal fluid. Downhole exchangers have the lowest investment cost of all types of heat exchangers, but downhole exchangers are feasible only where reservoir depths are typically less than 500 feet (Zimmerman, 1984). In most cases, the water inside the heat exchanger cycles thermally. Therefore, pumps are not required to extract the water and the need for fluid disposal is eliminated (Zimmerman, 1984).

Surface Heat Exchangers

Unlike downhole exchangers, surface exchange systems require extraction of geothermal fluid from the reservoir and, subsequently, some means of spent fluid or brine disposal. Applications of this type of energy system are numerous, ranging from residential heating to various commercial uses. One such application is the Pagosa Springs Geothermal District space heating system, which successfully uses low-temperature (60°C) geothermal fluid for space heating in public buildings, school facilities, residences, and commercial establishments at significantly lower cost than conventional fuels (Goering, et al. 1984).

Current Use

Table II-3 presents a listing of 122 direct-use commercial and community operations indicated in the literature as currently operating in the United States. This table includes process type, owner, location, and daily brine flow rates.

The geographical locations of direct users are much more widespread than those of electric power generation facilities. This is due, in part, to the fact that direct applications employ a wider range of temperatures than do electric power generation facilities.

TABLE II-5 SITE LISTING--DIRECT USER.

NAME	OWNER	ST/COUNTY	PROCESS TYPE	BRINE FLOW RATE (MGD)
CHENA HOT SPRINGS	PRIVATE OWNERSHIP	AK DOYON	LDP	0 30
CIRCLE HOT SPRINGS	PRIVATE OWNERSHIP	AK DOYON	LDS	0 19
MANLEY HOT SPRINGS	PRIVATE OWNERSHIP	AK DOYON	LDS	0 21
MELOZI HOT SPRINGS	PRIVATE OWNERSHIP	AK DOYON	LDS	0 19
HOT SPRINGS NATIONAL PARK	US GOVT	AR GARLAND	LD	0 06
NILAND	ENGLER FISH FARMS	CA IMPERIAL	LDF	0 00
SALTON CITY	CROCKER ENTERPRISES	CA IMPERIAL	LD	0 00
CRABTREE HOT SPRINGS	US GOVT	CA LAKE	LD	0 01
SUSANVILLE	CITY OF SUSANVILLE	CA LASSEN	LDD	0 73
SUSANVILLE	LITCHFIELD CORRECTIONAL INSTITUTE	CA LASSEN	LDS	1 37
SUSANVILLE - NURSERY	PRIVATE OWNERSHIP	CA LASSEN	LDG	0 43
WENDELL-AMEDEE	RAMCO RESOURCES	CA LASSEN	LDG	0 86
CEDARVILLE HIGH SCHOOL & ELEMENTARY SCHOOL	MODOC COUNTY	CA MODOC	LDS	0 18
FORT BIDWELL	INDIAN RESERVATION	CA MODOC	LDF	0 43
FORT BIDWELL-DISTRICT HEATING	INDIAN RESERVATION	CA MODOC	LDD	0 04
FORT BIDWELL - FISH	INDIAN RESERVATION	CA MODOC	LDF	0 43
MAMMOTH LAKES	NOT FOUND	CA MONO	LD	0 00
MAMMOTH LAKES-DISTRICT HEATING		CA MONO	LDD	2 46
MAMMOTH LAKES-FISH		CA MONO	LDF	0 10
INDIAN VALLEY HOT SPRINGS (GREENVILLE)	INDIAN VALLEY HOSPITAL	CA PLUMAS	LDS	0 41
COACHELLA	TAKASHIMA NURSERIES	CA RIVERSIDE	LDS	2 86

KEY FOR PROCESS TYPE

First Letter	Second Letter	Third Letter	
L-Liquid	D-Direct Use	S-Space Heating	F-Fish Farm
		D-District Heating	G-Greenhouse
		P-Pool	I-Industrial

MGD = Million gallons per day

Source Appendix A

TABLE II-3 (continued)

NAME	OWNER	ST/COUNTY	PROCESS TYPE	BRINE FLOW RATE (MGD)
ELSINORE HOT SPRINGS	LAKE ELSINORE COMMUNITY	CA RIVERSIDE	LDS	0.72
MECCA	AQUAFARMS INTERNATIONAL	CA RIVERSIDE	LDF	3.60
SAN BERNADINO-DISTRICT HEATING	CITY OF SAN BERNARDINO	CA SAN BERNADINO	LDD	1 80
SAN BERNADINO INDUSTRIAL	CITY OF SAN BERNARDINO	CA SAN BERNADINO	LDI	0 25
PASO ROBLES	CALAQUA INC	CA SAN L. OBISPO	LDF	0 24
HUNTS HOT SPRINGS	INDIAN SPRINGS SCHOOL	CA SHASTA	LDS	0 01
BOULDER-GREENHOUSE	NOT FOUND	CO BOULDER	LDS	0 45
SALIDA	NOT FOUND	CO CHAFFEE	LDP	0 11
ALAMOSA	ALAMOSA SHOPPING CENTER	CO ALAMOSA	LDS	1 44
PAGOSA SPRINGS	THE SPA MOTEL	CO ARCHULETA	LDD	1 73
GLENWOOD SPRINGS	REDSTONE CORP	CO GARFIELD	LDS	1 73
OURAY HOT SPRINGS	NOT FOUND	CO OURAY	LDS	0 07
BOISE CITY	BOISE CITY GEOTHERMAL SYSTEM DISTRICT HEATING	ID ADA	LDD	2 88
BOISE WARM SPRINGS	BOISE WARM SPRINGS WATER DISTRICT	ID ADA	LDD	1 19
HUNT	MILSTEAD FLORAL GREENHOUSE	ID ADA	LDG	0 35
IDAHO STATE CAPITAL MALL	STATE OF IDAHO	ID ADA	LDD	1 44
THE EDWARD'S GREENHOUSE	THE EDWARD'S GREENHOUSE	ID ADA	LD	0 58
VETERANS ADMINISTRATION MEDICAL CENTER	US GOVT	ID ADA	LDS	0 43
DONLAY RANCH HOT SPRINGS	DONLAY RANCH	ID BOISE	LDS	0 10

KEY FOR PROCESS TYPE

First Letter	Second Letter	Third Letter	
L-Liquid	D-Direct Use	S-Space Heating	F-Fish Farm
		D-District Heating	G-Greenhouse
		P-Pool	I-Industrial

MGD = Million gallons per day

Source. Appendix A

TABLE II-3 (continued)

NAME	OWNER	ST/COUNTY	PROCESS TYPE	BRINE FLOW RATE (MGD)
GARDEN VALLEY	WARM SPRINGS GREENHOUSE	ID BOISE	LDG	0.43
HOT SPRINGS	CORRAL	ID CAMAS	LDS	0 04
CALDWELL	CALDWELL MUNICIPALITY	ID CANYON	LDS	1 14
NAMPA	NAMPA CITY	ID CANYON	LDS	1.04
HOOPER SPRINGS	HOOPER ELEMENTARY	ID CARIBOU	LDS	0.35
ALMO	LDS CHURCH	ID CASSIA	LDS	0 29
BURLEY	PRIVATE OWNERSHIP	ID CASSIA	LDS	0 13
CROOK'S GREENHOUSE	CROOK'S GREENHOUSE	ID CASSIA	LDG	0 01
MALAD CITY	MALAD HIGH SCHOOL	ID ONEIDA	LDD	5.48
BANKS	PRIVATE OWNERSHIP	ID OWYHEE	LDG	0 19
BRUNEAU	PRIVATE OWNERSHIP	ID OWYHEE	LDG	0 38
HOT SPRINGS	PRIVATE OWNERSHIP	ID OWYHEE	LDG	0 49
MARSING	PRIVATE OWNERSHIP	ID OWYHEE	LDG	0 09
BUHL	ROBERT LUNTY	ID TWIN FALLS	LDG	0 03
BUHL	ROBERT LUNTY	ID TWIN FALLS	LDF	0 58
BUHL CAL FLINT	CAL FLINT FLORAL	ID TWIN FALLS	LDG	0 45
BUHL FLINT	FLINT GREENHOUSES	ID TWIN FALLS	LDG	0.80
BUHL-M&L	M&L GREENHOUSES	ID TWIN FALLS	LDG	1 01
BUHL-RAY	FISH BREEDERS OF IDAHO	ID TWIN FALLS	LDF	11 50
TWIN FALLS	COLLEGE OF SOUTHERN ID	ID TWIN FALLS	LDS	1 73
WARM SPRINGS STATE HOSPITAL	WARM SPRINGS HOSPITAL	MT DEER LODGE	LDS	0 09
ENNIS	MONTANA LUMBER CO.	MT MADISON	LDS	0.04
ENNIS	MONTANA LUMBER CO.	MT MADISON	LDS	0 03
WHITE SULFUR SPRINGS	FIRST NATIONAL BANK	MT MEAGHER	LD'	0 09

KEY FOR PROCESS TYPE

First Letter	Second Letter	Third Letter	
L-Liquid	D-Direct Use	S-Space Heating	F-Fish Farm
		D-District Heating	G-Greenhouse
		P-Pool	I-Industrial

MGD = Million gallons per day

Source. Appendix A

TABLE II-3 (continued)

NAME	OWNER	ST/COUNTY	PROCESS TYPE	BRINE FLOW RATE (MGD)
WHITE SULFUR SPRINGS	WHITE SULFUR SPRINGS MOTEL	MT MEAGHER	LDS	0.58
AVON	EARTH ENERGY INSTITUTE	MT MISSOULA	LDG	0 02
LOLO	PRIVATE OWNERSHIP	MT MISSOULA	LDS	0 12
JEMEZ SPRINGS	NOT FOUND	NM SANDOVAL	LDD	0 04
LAS ALTURAS	LAS ALTURAS ESTATES	NM DONA ANA	LDS	0.00
LAS CRUCES SPACE HTG & GREENHOUSE	NEW MEXICO STATE UNIVERSITY	NM DONA ANA	LDS	0.60
APPACHE TEJO & KENNECOTT WARM SPRINGS	KENNECOTT CORP	NM GRANT	LDI	1.09
GILA HOT SPRINGS-SPACE HTG & POOL	NOT FOUND	NM GRANTS	LDS	0 20
ANIMAS	BURGETT FLORAL	NM HIDALGO	LDG	0 34
ANIMAS	BEALL COMPANY GREENHOUSE	NM HIDALGO	LDG	0 10
ANIMAS	MCCANT GREENHOUSE	NM HIDALGO	LDG	0 03
TRUTH OR CONSEQUENCES	CITY OF T OR C	NM SIERRA	LDS	0 05
RENO	CITY OF RENO	NV WASHOE	LDS	0.72
RENO - POOL	PRIVATE OWNERSHIP	NV WASHOE	LDP	0 16
BRADY HOT SPRINGS	GEOTHERMAL FOOD PROCESSORS, INC	NV CHURCHILL	LDI	1 03
CARLIN (H P.)	CARLING HIGH SCHOOL	NV ELKO	LDS	0.29
ELKO HOT SPRINGS	ELKO HEAT COMPANY	NV ELKO	LDD	1 01
ELKO JUNIOR HIGH SCHOOL	ELKO COUNTY	NV ELKO	LDS	0 43
CALIENTE - SPACE HEATING	NOT FOUND	NV LINCOLN	LDS	0 07

KEY FOR PROCESS TYPE

First Letter	Second Letter	Third Letter	
L-Liquid	D-Direct	S-Space Heating	F-Fish Farm
		D-District Heating	G-Greenhouse
		P-Pool	I-Industrial

MGD = Million gallons per day

Source Appendix A

TABLE II-3 (continued)

NAME	OWNER	ST/COUNTY	PROCESS TYPE	BRINE FLOW RATE (MGD)
CALIENTE - SPACE HTG & POOL	NOT FOUND	NV LINCOLN	LDS	0 22
WABUSKA	ALEXANDER DAWSON CO	NV LYON	LDF	0 00
FIRST CHURCH OF RELIGIOUS SCIENCE	FIRST CHURCH OF RELIGIOUS SCIENCE	NV WASHOE	LD	0 09
VETERANS ADMINISTRATION MEDICAL CENTER	VETERANS ADMINISTRATION MEDICAL CENTER	NV WASHOE	LD	0 43
MOANA GEOTHERMAL AREA	WARREN ESTATES	NV WASHOE	LDD	0.43
MOANA GEOTHERMAL AREA	SIERRA GEOTHERMAL INC.	NV WASHOE	LD	0 22
WELLS (H P)	WELLS RURAL ELECTRIC CO	NV WELLS	LDS	0.07
AUBURN	CAYUGA COMMUNITY COLLEGE & EAST MIDDLE SCHOOL	NY CAYUGA	LDS	0 22
MERRILL	PRIVATE OWNERSHIP	OR KLAMATH	LDG	0 14
KLAMATH FALLS-DISTRICT HTG	CITY OF KLAMATH FALLS	OR KLAMATH	LDD	0 40
KLAMATH FALLS DISTRICT HTG	OREGON INST OF TECH	OR KLAMATH	LDS	1.04
KLAMATH FALLS - POOL	PRIVATE OWNERSHIP	OR KLAMATH	LDP	0.04
KLAMATH FALLS-SPACE HTG	PRIVATE OWNERSHIP	OR KLAMATH	LDS	0 50
KLAMATH FALLS-SPACE HTG	PRIVATE OWNERSHIP	OR KLAMATH	LDS	2.08
HUNTERS HOT SPRINGS	COMMERCIAL RESORT	OR LAKE	LDS	0 10
LAKEVIEW - GREENHOUSE	PARKERS GREENHOUSES	OR LAKE	LDG	0 14
LAKEVIEW - POOL HEATING	PRIVATE OWNERSHIP	OR LAKE	LDP	0 03
LAKEVIEW - SPACE HEATING	PRIVATE OWNERSHIP	OR LAKE	LDS	0.10
SUMMER LAKE	COMMERCIAL RESORT	OR LAKE	LDP	0.03
VALE	INDUSTRIAL	OR MALHEUR	LDI	0 43
VALE	SUNDECO OREGON TRAIL MUSHROOM CO.	OR MALHEUR	LDG	0.12

KEY FOR PROCESS TYPE

First Letter	Second Letter	Third Letter	
L-Liquid	D-Direct	S-Space Heating	F-Fish Farm
		D-District Heating	G-Greenhouse
		P-Pool	I-Industrial

MGD = Million gallons per day

TABLE II-3 (continued)

NAME	OWNER	ST/COUNTY	PROCESS TYPE	BRINE FLOW RATE (MGD)
COVE HOT SPRINGS	COMMERCIAL POOL	OR UNION	LDP	0 43
HOT SPRINGS	PRIVATE OWNERSHIP	SD FALL RIVER	LDP	7 20
PHILIP-GREENHOUSE	PRIVATE OWNERSHIP	SD HAAKON	LDG	0 36
PHILIP DISTRICT HEATING	CITY OF PHILIP	SD HAAKON	LDD	0 49
ST MARY'S HOSPITAL	ST. MARY'S HOSPITAL	SD HUGHES	LDS	0 53
MARLIN	MARLIN CHAMBER OF COMMERCE BUILDING	TX FALLS	LD	0 00
T-H-S MEMORIAL HOSPITAL	NOT FOUND	TX FALLS	LD	0 00
CORSICANA	NAVARRO COLLEGE	TX NAVARRO	LD	0 00
NEWCASTLE	CHRISTENSON BROS	UT IRON	LDG	0 36
BLUFFDALE	UTAH ROSES	UT SALT LAKE	LDC	0 58
SANDY	UTAH ROSES	UT SALT LAKE	LDG	1 73
UTAH STATE PRISON	STATE OF UTAH	UT SALT LAKE	LDS	0 72
SOL DUC HOT SPRINGS SPACE HTG & POOL	PRIVATE OWNERSHIP	WA CLALLAM	LDS	0 11
EPHRATA	CITY OF EPHRATA	WA GRANT	LDD	0 00
YAKIMA	CITY OF YAKIMA	WA YAKIMA	LDS	1 01
LANDER	NOT FOUND	WY FREMONT	LDF	0 07
THERMOPOLIS	NOT FOUND	WY HOT SPRINGS	LDG	1 44
JACKSON	JACKSON NATIONAL FISH HATCHERY	WY TETON	LDF	0 19

KEY FOR PROCESS TYPE

First Letter	Second Letter	Third Letter	
L-Liquid	D-Direct	S-Space Heating	F-Fish Farm
		D-District Heating	G-Greenhouse
		P-Pool	I-Industrial

MGD = Million gallons per day

Source Appendix A

CHAPTER III

IDENTIFICATION AND CHARACTERIZATION OF EXEMPT WASTES

DISCUSSION OF EXEMPT VERSUS NONEXEMPT WASTES

To assess the potential for environmental impact of wastes generated by the geothermal industry, the Agency first had to identify which waste streams resulting from exploration, development, and production operations are exempt under RCRA 3001(b)(2), and then characterize those waste streams. Using selection criteria derived from RCRA's language and the accompanying legislative history, EPA has determined that the following geothermal energy wastes are temporarily exempt from being regarded as hazardous under Section 3001(b)(2) and are therefore within the scope of this study:

- Drilling media and cuttings;
- Fluids from geothermal reservoirs;
- Piping scale and flash tank solids;
- Precipitated solids from brine effluent;
- Settling pond wastes;
- Hydrogen sulfide wastes;
- Cooling tower drift; and
- Cooling tower blowdown.

These exemptions extend only to certain wastes generated during the exploration, development, and production of geothermal energy.

Geothermal wastes that are not exempt and are beyond the scope of this study include the following:

- Wastes originating in the electric generator;
- Waste lubricants;
- Waste hydraulic fluids;
- Waste solvents;
- Waste paints; and
- Sanitary wastes.

In dry-steam power generation (The Geysers), most waste streams are produced from materials passing through the turbine and are exempt. Generation of these wastes--largely hydrogen sulfide abatement wastes--is intrinsic to the production of geothermal energy. These wastes should be removed before the fluid is injected back into the geothermal reservoir in order to maintain the integrity of the injection well and the geothermal reservoir. In flashed-steam and binary power plants, any waste resulting from a geothermal fluid or gas that passed through the turbine is exempt. If the geothermal product passes only through the heat exchanger (binary process) or flash separator (flashing process), the resulting waste stream is exempt. Most direct-use waste streams are exempt wastes.

EXPLORATION AND DEVELOPMENT WASTES

Well drilling activities generate the bulk of wastes from geothermal exploration and development operations. In general, exempt wastes from well drilling are drilling muds and drill cuttings. Well drilling operations generate large quantities of wastes consisting of discarded drilling muds and residues from drilling mud cleaning processes. Used drilling muds are cleaned by circulation through equipment that removes solids, such as shale shakers, sand traps, hydrocyclones, and centrifuges.

After cleaning, the mud is recycled to the drilling operations and the removed solids are disposed of as waste residue.Further treatment of recycled muds, in the form of additives, is required to control mud characteristics such as pH and viscosity. Drilling muds are discharged to reserve pits for storage or disposal, or when the drilling mud system must be purged because of a change in drilling conditions.

There is little documentation of the volumes of drilling muds and cuttings generated. One study (USDOE 1980a), based on 50 wells drilled in the Imperial Valley of California, indicated that about 600 metric tons of mud and cuttings resulted from drilling a typical 1,500-meter well. Because of the scarcity of waste generation data, a methodology was developed to estimate waste volumes of drilling muds and cuttings. For the annual drilling activity, shown in Table III-1, the average values for well depth and diameter were determined by geothermal resource area. These average dimensions were calculated from site-specific well data contained in the data base. For States without such data, average well dimensions were estimated from fluid flow rate, fluid temperature, and intended use of the well.

Volumes of cuttings for specific geothermal areas were calculated from the number of wells in the area and their average depths and diameters. From this calculation, an associated mud volume was computed, based upon a cuttings/drilling mud conversion or correlation factor derived from site-specific drilling information (Morton 1986). In preparing Table III-1, cuttings and drilling mud waste volumes were combined, converted to thousands of barrels, and summarized for the years 1981 through 1985.

Table III-1 Estimated Waste Volumes for Drilling Activities Associated with Exploration and Development of Geothermal Resources

State	Total mud and cuttings volume (thousands of barrels) 1981	1982	1983	1984	1985
California	97.3	103.8	51.2	198.9	109.3
The Geysers	49.8	59.5	46.2	52.2	53.4
Imp. Valley	47.2	43.3	3.9	145.6	55.1
Other	0.3	1.0	1.1	1.1	0.8
Nevada	7.2	1.0	2.0	1.0	1.5
Idaho	0.6	NA	0.3	NA	NA
Montana	NA	0.1	0.1	NA	NA
Wyoming	NA	NA	NA	NA	NA
New Mexico	2.8	1.4	NA	NA	NA
Oregon	0.3	0.1	0.1	NA	0.1
Washington	0.2	0.1	NA	NA	NA
Utah	NA	2.3	1.2	2.3	NA
South Dakota	NA	NA	NA	NA	NA
North Dakota	NA	NA	NA	NA	NA
Hawaii	5.1	2.5	NA	NA	NA
Total U.S.	113.5	111.3	54.9	202.2	110.9

NA - No Activity

Source: See Appendix A.

GEOTHERMAL POWER PLANT WASTES

Wastes generated from geothermal power production include spent brine, flash tank scale, separated solids from pre-injection treatment of spent brines (Royce 1985), and hydrogen sulfide abatement wastes. Depending upon the nature of the geothermal fluid, scale formed in process lines, valves, and turbines must also be removed. The scale formed generally consists of heavy metal salts and silica. The amount and composition of these wastes are highly dependent upon the site's mineralogy and the type of process used for power production. Hydrogen sulfide abatement constituents include iron sulfide sludge and iron catalysts used to precipitate hydrogen sulfide; emulsion waste from the froth tank, vanadium catalysts, and elemental sulfur from the peroxide extraction process; and sulfur dioxide and sulfur dioxide diluted with water. In California, these wastes are incinerated or placed in a Class 1 landfill for hazardous waste.

Very little information describing and quantifying these wastes was found in the literature review. Most of the available information was derived from areas such as The Geysers and the Imperial Valley, which have the most commercial activity. To estimate waste volumes from geothermal power plants, different approaches were developed, depending upon the amount of detail available for each geothermal site. PG and E verified that <u>all</u> condensate is cycled through cooling towers prior to injection, thus making the injection fluids an intrinsic part of the production of geothermal energy. Injection is important not only as a method of disposal but also for reservoir fluid volume maintenance.

Brine flows for both binary and flash power production processes were calculated from equations derived from a plot of hydrothermal fluid requirements versus fluid temperature (Zimmerman 1984). The following equations were generated by extrapolation of data points taken from the above-referenced plot:

Binary Process:
Kilograms Brine/Kilowatt Hour = 583,903-4.141°C+(0.007611°C)

Flash Process:
Kilograms Brine/Kilowatt Hour = 456.78-2.576°C+(0.003855°C).

Hydrothermal temperatures were obtained from four sources (DiPippo 1986; U.S. Geological Circular 790, 1978; and California Division of Oil and Gas 1984 and 1985). They were coupled with site-specific power ratings to calculate the daily volumes of brine throughput. (See Appendix A for development of data.) To this daily flow throughput, an annual operating factor of 90 to 95 percent (depending on factors such as type of process and plant age) was applied to obtain brine volume for a particular facility (see Table III-2). The waste volumes presented in Table III-2 (in billions of gallons per year) are considered conservative since no loss is assumed to result from solids formation or evaporation prior to disposal.

Spent Brine for Injection

Removed impurities from steam at The Geysers are exempt waste. They are generated from excess steam condensate that is discharged from the cooling tower before injection. The solids and sludge from The Geysers are generally considered hazardous wastes and are treated in accordance with required California State regulations.

Spent brines from operations in the Imperial Valley consist of both brines that have passed through the turbine and those that have not. They are also injected (Morton 1986) into the producing zone, but in much larger quantities than at The Geysers. Brines from binary systems are maintained under set temperatures and pressures to prevent precipitation of dissolved solids. This practice allows injection of almost 100 percent of the geothermal fluid.

Table III-2 Estimated Liquid Waste Volumes from Both Binary and Flash Process Plants*

State	Number of sites	Billions of gallons per year
California	9	43.70
Nevada	5	9.26
New Mexico	1	.24
Hawaii	1	.06
Utah	2	3.17
Total	18	56.43

*Plants that are currently operational; does not include the estimated volume for three facilities under construction.

Source: See Appendix A.

Brines produced at the flash plants require treatment before injection because of their very high dissolved solids content (Morton 1986). This treatment results in a solid precipitate that is hauled away from the site and disposed of according to State regulations for solid wastes. Between 80 and 90 percent of the brine is injected after this treatment. Brine injection wells are considered Class V under the Federal Underground Injection Control (UIC) Program. (See Chapter VII for details on the UIC Program.) Class V includes wells used for electric power injection, direct heat injection, heat pump/air conditioning return flow wells, and ground-water aquaculture wells.

Sludges from Brine Precipitation

One method of treating geothermal brine is to allow precipitation of dissolved solids in spent-brine holding ponds. The holding pond at the East Mesa site in the Imperial Valley has sufficient residence time to allow clarified liquid to be withdrawn from the end opposite the inlet and injected into the producing reservoir. Solids accumulating in the pond are dredged, dried by evaporation, and disposed of at the type of landfill prescribed by State regulations, based on the characteristics of the waste.

Estimates of Waste Volumes

Table III-2 shows estimated liquid waste volumes for the 18 operational power generation facilities that use geothermal energy from a liquid-dominated system. Of the estimated 56 billion gallons per year (BGY), 62 percent are generated at flash process facilities, while 38 percent are generated at binary process facilities. If the estimated production rates for the three facilities under construction are included, the total waste volume increases to 71.63 BGY (see Appendix A).

Because of the sparcity of the data, no attempt was made to quantify the solid waste generated from power generation facilities. Several facilities in California generate solids using a patented clarification/thickening process during brine treatment (Morton 1986). Based on a review of the literature, these facilities are the sole source of any significant generation of solids.

WASTE GENERATION FROM DIRECT USERS

The primary waste generated from using geothermal energy as a direct source of heat is the spent geothermal fluid remaining after usable heat has been extracted. In most cases, this fluid is of high enough quality to allow it to be discharged into nearby surface water bodies. In some cases, spent geothermal fluids even meet drinking water standards and may be discharged into the community water supply.

Waste generated by direct applications was calculated similarly to waste quantities from power generation facilities. Industrial direct users were estimated to operate about 80 percent of the year (292 days). All other types of direct users were estimated to operate 25 percent of the year (91 days), or less, depending on geographical location. By multiplying daily flow rates by the operating factors, estimated waste volumes were obtained. Table III-3 shows estimated liquid waste volumes for 104 direct users in 12 States. These volumes were calculated as described previously.

WASTE CHARACTERIZATION

The following paragraphs discuss the characteristics of waste streams resulting from exploration, development, and production operations, and present a summary of the analytical data found in the literature for both liquid and solid wastes. These data are summarized

Table III-3 Estimated Liquid Waste Volumes
Resulting from Direct Use of Geothermal Energy

State	Number of sites	Billions of gallons per year
California	18	1.41
Oregon	14	.60
Idaho	27	3.02
Montana	7	.09
South Dakota	4	.78
Utah	4	.31
Wyoming	3	.15
New Mexico	8	.50
Nevada	10	.61
Colorado	6	.50
New York	1	.01
Washington	2	.10
Total	104	8.09

Source: See Appendix A.

in Tables III-4 through III-13 and are compared to current RCRA characteristic thresholds (ignitability, corrosivity, reactivity, and extraction procedure toxicity) for both solid and liquid wastes.

Liquid Wastes

Tables III-4 and III-5 contain temperature, pH, and chemical constituent analysis summaries for selected waste streams from geothermal plants, power generation, and direct use of geothermal energy. These tables were constructed from several references listed in Appendix A.

Table III-4 contains a chemical constituent liquid analysis summary of liquids from seven different power generation facilities. Five of the seven facilities produce power using the binary process. For these facilities, the concentration levels of various constituents are shown for the incoming brine, with the exception of temperature, which is the measured discharge value. (The chemical abbreviations for these constituents are shown in Appendix B.) Since no change occurs in the physical state of the geothermal liquid in the binary process, these results are expected to be representative of the discharged brine. This assumption is not entirely valid, however, for power plants using the flash process. In these plants, the various chemical constituents can be concentrated in the liquid that remains after the progressive series of steam generation steps.

Table III-5 reports analyses of geothermal fluids from 43 direct users in 13 States. In general, the levels of chemical constituents are much lower than for power plant brines.

Table III-6 contains chemical analyses of three brine samples tested for both major and trace constituents. These samples were collected in 1980 from three test well sites in the Imperial Valley (Acurex 1980).

TABLE III-4 POWER PLANT
LIQUID ANALYSIS SUMMARY

NAME	ST/COUNTY	TYPE	TEMP °C	pH	TDS mg/L	Na mg/L	K mg/L	Ca mg/L	Mg mg/L	Cl mg/L	F mg/L	ALK mg/L	SO_4 mg/L	B mg/L	SIO_2 mg/L	H_2S mg/L
EAST MESA	CA IMPERIAL	LPB	71 0	9 00	1978	623	39 00	3 2	0 1	514	4 0	530	169	3.2	489.0	0 00
EAST MESA (B C MCCABE NO 1)	CA IMPERIAL	LPB	71 0	7 40	16330	4720	231 00	1062 0	23 0	8242	1 5	202	148	8 0	187 0	0 00
HEBER	CA IMPERIAL	LPF	72 0	7 10	14100	3600	360 00	880 0	2 4	9000	1 6	20	1000	5.0	120 0	2.00
HEBER	CA IMPERIAL	LPB	72 0	7 10	14100	3600	360 00	880 0	2 4	9000	1 6	20	1000	5 0	120.0	2.00
SALTON SEA (VULCAN)	CA IMPERIAL	LPF	105	5 30	183700	36340	7820.00	14550 0	780 0	93650	0 0	60	58	210.0	350 0	0.00
WENDELL-AMEDEE (WENDELL HOT SPRINGS)	CA LASSEN	LPB	92 2	8 50	827	227	6.80	16 0	0 0	160	4 5	27	288	4.0	96.0	0.00
STEAMBOAT SPRINGS	NV WASHOE	LPB	89 2	7 90	2169	653	71 0	5 0	0 0	865	1 8	305	100	49 0	293.0	4 70

KEY FOR POWER PLANT TYPE

First Letter	Second Letter	Third Letter
L - Liquid	P - Power Generating	F - Flash Process
		B - Binary Process

Source See Appendix A

TABLE III-5 DIRECT USERS
LIQUID ANALYSIS SUMMARY
(BY SITE)

NAME	ST/COUNTY	TYPE	TEMP °C	pH	TDS mg/L	Na mg/L	K mg/L	Ca mg/L	Mg mg/L	Cl mg/L	F mg/L	ALK mg/L	SO_4 mg/L	B mg/L	SIO_2 mg/L	H_2S mg/L
CHENA HOT SPRINGS	AK DOYON	LD	57 0	9 10	380	110	3 30	1 3	0 1	29	18 6	131	68	0 2	8 5	1 59
MANLEY HOT SPRINGS	AK DOYON	LD	56 0	7 70	446	130	4 50	4 0	1 0	134	8 5	90	54	1.3	6.5	1 61
HOT SPRINGS NATIONAL PARK	AR GARLAND	LD	60 0	7 30	189	4	1 50	45 0	4 7	2	0 2	165	9	0 0	42 0	0 00
CRABTREE HOT SPRINGS	CA LAKE	LD	40 6	7 80	5350	1650	34 00	50 0	188 0	1120	0.4	3680	29	277 0	154 0	0 00
SUSANVILLE	CA LASSEN	LDD	51 7	7 10	825	215	5 00	26.0	2 0	0	0 0	0	320	2.0	0 0	0.00
COACHELLA	CA RIVERSIDE	LDG	32 2	9 00	171	55	1 00	5 0	1 0	17	0 8	97	31	0 0	13 0	0 00
SAN BERNARDINO - DISTRICT HEATING	CA SAN BERNARDINO	LDD	35 5	8 40	730	215	3.00	14 0	0.6	60	17 0	52	341	0 5	54 0	0 00
PASO ROBLES	CA SAN LUIS OBISPO	LDF	32 2	8 30	995	465	5 10	5 0	0 6	184	2.7	596	252	2 0	79 0	0.00
HUNTS HOT SPRINGS	CA SHASTA	LDS	57 6	8 80	1130	300	4.30	52 0	0 1	140	3.6	55	520	13 0	47 0	0 00
PAGOSA SPRINGS	CO ARCHULETA	LDD	40 0	6 60	3310	800	87.00	240.0	2 6	190	5.0	862	1500	2.0	58 0	0 00
GLENWOOD SPRINGS	CO GARFIELD	LDS	40 0	6 40	20500	7000	380 00	500 0	82.0	11000	27.0	773	1100	0.9	30 0	0 00
DURAY HOT SPRINGS	CO DURAY	LDS	24 0	6 50	1660	120	8 80	360.0	8 5	44	3 6	131	1000	0 2	49 0	0 00
BOISE CITY	ID ADA	LDD	80 0	9 00	290	90	1 60	1 7	0 0	10	14 0	70	23	0 0	160 0	0 00
CALDWELL	ID CANYON	LD.	27 0	7 70	203	53	2 00	11 0	0 1	5	1 5	160	3	0.1	49 0	0 00
ALMO	ID CASSIA	LDS	32 0	6 80	855	240	13 00	58 0	9 0	380	4 4	138	44	0 1	37 0	2 90
MALDA CITY	ID ONEIDA	LDD	25 0	6.80	1220	280	29 00	110.0	33 0	470	0.7	331	110	0.0	21 0	0 00
BANKS	ID OWYHEE	LDG	41 0	9 10	232	70	1.30	1 9	0 1	4	16 0	88	39	0 0	67.0	0 00
BRUNEAU	ID OWYHEE	LDG	35 0	8 70	227	52	7 20	6 7	0 1	9	9 4	98	18	0 1	77 0	0 00
WARM SPRINGS STATE HOSPITAL	MT DEER LODGE	LDS	60 0	6 46	1310	120	26 00	220.0	22 0	5	3 9	258	670	0 1	56 0	0 70
WHITE SULFUR SPRINGS	MT MEAGHER	LDS	43 0	6 80	1950	480	20 00	44.0	12 0	180	7 4	835	310	9 1	51 0	0.70
WHITE SULFUR SPRINGS	MT MEAGHER	LDS	43 0	6 80	1950	480	20 00	44 0	12 0	180	7 4	835	310	9 1	51 0	0 70

TABLE III-5 (continued)

NAME	ST/COUNTY	TYPE	TEMP °C	pH	TDS mg/L	Na mg/L	K mg/L	Ca mg/L	Mg mg/L	Cl mg/L	F mg/L	ALK mg/L	SO_4 mg/L	B mg/L	SiO_2 mg/L	H_2S mg/L
LOLO	MT MISSOULA	LDS	32 0	9 30	224	52	1.20	1 8	0 1	6	6 4	86	18	0.1	72 0	0.50
LAS ALTURAS	NM DONA ANA	LD	45 1	8 07	2160	488	55 00	142 0	32 0	980	1 6	348	223	0.6	68 0	0 00
APACHE TEJO AND PENNECOTT WARM SPRINGS	NM GRANT	LDI	27 0	8 43	370	48	4 60	34 0	17 0	19	2 7	222	70	0.8	0 0	0.00
GILA HOT SPRINGS - SPACE HTG & POOL	NM GRANT	LDS	41 0	8 13	468	13	3.00	9 9	0.1	105	9 1	101	45	0 1	74 0	0 00
TRUTH OR CONSEQUENCES	NM SIERRA	LDS	54 0	6 70	2620	742	17 50	57.0	18.8	1340	3.5	250	120	0.2	41 0	0 00
CALIENTE - SPACE HTG & POOL	NV LINCOLN	LD	58 0	7 20	335	39	14 00	34 0	4 8	8	1 4	200	30	0 0	106.0	0 00
CALIENTE - SPACE HTG & POOL	NV LINCOLN	LD	54 0	7 20	335	39	14 00	34 0	4 8	8	1 4	200	30	0.0	106 0	0 00
MOANA GEOTHERMAL	NV WASHOE	LDD	96 0	8 00	856	199	3 70	21 0	4 1	32	1.5	211	325	0 7	79 0	0.00
MOANA GEOTHERMAL	NV WASHOE	LD	96 0	8 00	856	199	3 70	21 0	4 1	32	1 5	211	325	0 7	79.0	0 00
KLAMATH FALLS DISTRICT HEATING (INJECT)	OR KLAMATH	LDD	60 0	8 20	736	195	3 90	24 0	0 1	58	1 5	44	400	1 0	31 0	0.00
KLAMATH FALLS DISTRICT HEATING (SURF)	OR KLAMATH	LDD	60 0	8 20	736	195	3 90	24 0	0 1	58	1 5	44	400	1 0	31 0	0 00
KLAMATH FALLS POOL	OR KLAMATH	LDP	60 0	8 20	736	195	3 90	24 0	0 1	58	1 5	44	400	1 0	31 0	0.00
KLAMATH FALLS - SPACE HEATING (INJECT)	OR KLAMATH	LDS	60 0	8 20	736	195	3 90	24 0	0 1	58	1 5	44	400	1 0	31 0	0 00
KLAMATH FALLS - SPACE HEATING (SURF)	OR KLAMATH	LDS	60 0	8 20	736	195	3 90	24 0	0.1	58	1 5	44	400	1 0	31 0	0.00

TABLE III-5 (continued)

NAME	ST/COUNTY	TYPE	TEMP °C	pH	TDS mg/L	Na mg/L	K mg/L	Ca mg/L	Mg mg/L	Cl mg/L	F mg/L	ALK mg/L	SO_4 mg/L	B mg/L	SIO_2 mg/L	H_2S mg/L
VALE	OR MALHEUR	LDI	66 0	8 00	476	134	2 20	3 0	0 5	4	1 6	192	121	0 3	40 0	0 00
VALE	OR MALHEUR	LDG	77 0	8 00	476	134	2 20	3 0	0 5	4	16 0	192	121	0 3	40 0	0 00
COVE HOT SPRINGS	OR UNION	LDG	24 0	8 57	196	32	0 80	2 0	0 1	6	0 3	114	7	1 0	36 0	0.00
ST MARY'S HOSPITAL	SD HUGHES	LDS	37 0	6 80	2084	50	21 00	402 0	86 0	75	0 0	124	1445	1.6	27 0	0 70
NEWCASTLE	UT IRON	LDG	41 0	7 60	1120	270	21 00	58 0	0 4	52	7 3	53	580	0.7	99 0	0.00
UTAH STATE PRISON	UT SALT LAKE	LDS	66 0	7 50	891	191	16 00	76 0	25 0	226	0 8	264	191	0.4	35 0	0 00
SOL DUC HOT SPRINGS-SPACE HTG & POOL	WA CLALLAM	LDS	24 0	9 46	262	80	1 00	0 8	0 0	21	1 7	181	7	1 4	60 0	10 00
THERMOPOLIS	WY HOT SPRINGS	LDG	43 0	6 90	2190	250	37 00	310 0	71 0	300	6 8	710	730	0 5	37 0	0.00

KEY FOR DIRECT USER TYPE

First Letter	Second Letter	Third Letter
L - Liquid	D - Direct User	F - Fish Farm
V - Vapor	S - Space Heating	G - Greenhouse
		D - District Heating
		I - Industrial
		P - Pool heating

Source See Appendix A

Table III-6 Liquid Waste: Test Well Brine Analyses

Location: Imperial Valley

Site:	East Mesa	Niland	Westmoreland
Owner	Republic Geothermal	Republic Geothermal	MAPCO
Bulk Composition (mg/L)			
Al	1 6	<1	1 2
Ca	30 0	51,000	14,800
Fe	0 97	3,200	2,100
Mg	1.7	313	440
K	91	38,000	10,000
Na	1,500	55,000	60,000
Cl	1,700	295,000	158,700
F	10	19	10
SiO_2	13	300	18
SO_4	65	<0.01	<1
S	<0 1	<0 1	<0 1
Trace Analysis (ug/L)			
As	310	<250	14,000
Ba	<300	363,000	22,000
Cd	<5	70	4,000
Cr	<20	980	<60
Pb	<20	NR	83,000
Hg	<1	Int	<1
Se	<20	<500	5,100
Ag	<20	NR	<20
Sb	<100	<200	<1,000
Be	<20	<20	<20
B	<200	660,000	230,000
Cu	<70	7,400	<100
Li	7,800	NR	240
Ni	<200	300	<200
Sr	<500	1,395,000	1,400,000
Zn	30	NR	6,000,000
pH	8 7	1 6	3 8
TDS (mg/L)	56	5,600	220
Radium 226 (pCi/l)	0 0	0 4	1,320

NR - Not Reported (proprietary data restriction)
Int - Interference (reporting of results not possible)

Source: Acurex 1980

These test data can only be considered preliminary because the chemical analyses have not been verified through further testing. The first eight elements reported under the Trace Analysis columns are contaminants from the RCRA extraction procedure (EP) toxicity test for determining whether a waste is hazardous.

Table III-7 (Morris, et al. 1981) also contains chemical analyses of brines from three wells, two of which are from the same sites as in Table III-6. All test well fluid samples were taken from onsite pits or tanks. Again, the first eight elements shown are the eight RCRA EP toxicity contaminants.

Solid Wastes

The literature contains very little site-specific data relating to the composition of solid wastes from geothermal operations. Two references (Acurex 1980, 1983) discuss the analyses of 33 samples of various solids and liquids collected in 1980. Again, these data can only be considered preliminary at this time because the results have not been verified or subjected to a quality assurance procedure. These samples were analyzed in considerable detail, including leachate analyses for EP toxicity. Tables III-8 through III-12 list analytical results for the 11 samples that are applicable to this study.

Tables III-8, III-9, and III-10 list concentrations for major constituents contained in the 11 samples. These constituents indicate the composition of the sample. Results are reported for total constituent content; neutral and acid extractable values; and pH, percent moisture, and radium concentrations.

Table III-7 Metals Detected in the Extracts of Geothermal Brines[a]

Location:	Imperial Valley		
Owner:	Imperial	Republic Geothermal	MAPCO
Well Designation:	Magmamax -1	Fee -1 (Niland)	Courier -1 (Westmoreland)
Constituent (mg/L):			
Ag	.1	.5	.1
As[b]	25.0	<5.0	20.0
Ba	250.0	400.0	1300.0
Cd	<5.0	<4.0	<3.0
Cr	<1.0	<1.0	<1.0
Hg[b]	<.1	<.2	<.2
Pb	50.0	200.0	130.0
Se	NA	NA	NA
B	600.0	400.0	130.0
Be	<.2	<.4	<.3
Cu	5.0	10.0	<.7
Li	130.0	2000.0	1000.0
Ni	<1.0	5.0	<3.0
Sb	<5.0	<10.0	<7.0
Sr	400.0	800.0	1750 0
Zn	200.0	1000.0	400.0
Al	<1.0	10.0	70.0
Ca	MC	MC	MC
Co	<1.0	<1.0	<1.0
Fe	250.0	1000.0	650.0
K	MC	MC	MC
Mg	100.0	400.0	250.0
Mn	400.0	800.0	250.0
Mo	<2.0	<4.0	<3.0
Na	MC	MC	MC
Rb	10.0	25.0	17 0
Si	300.0	30.0	20.0
Sn	<4.0	<4.0	<4 0
Ti	< 5	<10.0	<10.0
V	<4.0	<4.0	<4.0

MC - Major constituent, ranging from approximately 2,000 mg/L to higher levels.
NA - Not applicable.

[a] Determinations by optical emission spectroscopy.

[b] Preconcentration using CuS carrier prior to spectographic analysis.

Source. Morris 1981.

TABLE III-8 SOLID WASTE BULK COMPOSITION

SITE	OWNER	SAMPLE TYPE	TOTAL % Al	TOTAL % Ca	TOTAL % Fe	TOTAL % Mg	TOTAL % K	TOTAL % Na	TOTAL % Cl	TOTAL % F	TOTAL % SiO_2	TOTAL % SO_4	TOTAL % S	pH	% MOISTURE	RADIUM 226 pCi/G
DESERT PEAK - NEVADA	CHEVRON	MUD	1 98	0 87	2 95	0 92	0 59	0 77	0 98	0 024	27 40	0 68	<0 0002	9 10	9.90	1.50
HUMBOLT - NEVADA	PHILLIPS	MUD	2 02	1 90	2 35	0 73	0.54	0 40	0 10	0 034	20 20	0 22	< 02	9 80	36 00	1.60
IMPERIAL VALLEY - WESTMORELAND	MAPCO	MUD	2 10	2 20	1 60	0 69	0 97	2 00	5 30	0 029	42 40	0 01	< 2	8 80	31 00	5 90
IMPERIAL VALLEY - NILAND	REPUBLIC GEO	MUD	2 57	2 20	1 70	1 15	1 10	1 25	2 00	0 042	29 20	0 15	< 02	8 40	62.00	2 10
IMPERIAL VALLEY - EAST MESA	REPUBLIC GEO	MUD	1 20	1 65	0 66	0 43	0 36	0 24	0 10	0 023	24 40	0 05	< 1	12 00	60 00	1 00
THE GEYSERS	AMINOIL USA	MUD	2 45	0 93	3 90	1 78	0 51	0 09	0 01	0 018	45 60	0 01	< 0002	9 60	23 00	0 40
THE GEYSERS	UNOCAL	MUD	1 58	0 59	3 03	1 65	0 27	0 11	0 01	0 024	19 40	0 02	< 02	10 00	53 00	0 50
STEAMBOAT - NEVADA	PHILLIPS	MUD	1 63	1 80	1 85	0 67	0 46	0 19	0 04	0 015	21 60	0 05	< 0002	9 30	34.00	1 00
IMPERIAL VALLEY - EAST MESA	DOE/WESTEC	BRINE	0 22	0 73	0 32	0 15	0 09	0 09	0 09	0 010	9 80	0 01	< 0002	8.80	34 00	3.80
IMPERIAL VALLEY - EAST MESA	DOE/WESTEC	SCALE	0 29	11 40	5 10	0 13	0 04	0 11	0 08	0 040	9 90	0 01	< 01	8 80	61.00	3.00
IMPERIAL VALLEY - EAST MESA	DOE/MAGMA	BRINE	0 01	1 50	2 45	0 02	1.10	4 30	9 30	0 340	12 40	0 01	< 01	6.10	46.00	78 00

KEY FOR SAMPLE TYPE

MUD - Sample taken from drilling mud disposal pit
BRINE - Brine sample taken from test well
SCALE - Sample taken from inside brine containment vessel

Source See Appendix A

TABLE III-9 SOLID WASTE ACID EXTRACT BULK COMPOSITION
(Units = mg/L)

SITE	OWNER	SAMPLE TYPE	Al	Ca	Fe	Mg	K	Na	Cl	F	SiO_2	SO_4	S
DESERT PEAK - NEVADA	CHEVRON	MUD	<1	790	2 6	18	28	350	487	33	<4	16	<0 1
HUMBOLT - NEVADA	PHILLIPS	MUD	<1	1300	4 6	27	13	140	53	64	9	82	<.1
IMPERIAL VALLEY - WESTMORELAND	MAPCO	MUD	<1	1200	0 8	18	170	975	2260	32	11	6 5	< 1
IMPERIAL VALLEY - NILAND	REPUBLIC GEO	MUD	<1	360	1 2	32	130	580	1280	95	4	80	< 1
IMPERIAL VALLEY - EAST MESA	REPUBLIC GEO	MUD	1 2	1100	5 8	38	24	115	54	60	32	64	1
THE GEYSERS	AMINOIL USA	MUD	<1	690	14	6	2 5	28	3	13	5	<1	< 1
THE GEYSERS	UNOCAL	MUD	<1	280	32	9 6	6 3	24	2	34	<4	32	< 1
STEAMBOAT - NEVADA	PHILLIPS	MUD	<1	700	1 6	15	21	53	23	54	14	39	< 1
IMPERIAL VALLEY - EAST MESA	DOE/WESTEC	BRINE	<1	680	1 8	7 5	17	63	49	1 8	8	7.0	< 1
IMPERIAL VALLEY - EAST MESA	DOE/WESTEC	SCALE	<1	1800	< 2	4 4	9 4	55	57	6 3	4 0	4 5	<.1
IMPERIAL VALLEY - EAST MESA	DOE/MAGMA	BRINE	<1	800	1 0	3.5	400	1900	5000	1 7	4	1.0	< 1

Source See Appendix A

TABLE III-10 SOLID WASTE NEUTRAL EXTRACT BULK COMPOSITION
(Units = mg/L)

SITE	OWNER	SAMPLE TYPE	Al	Ca	Fe	Mg	K	Na	Cl	F	SiO_2	SO_4	S
DESERT PEAK - NEVADA	CHEVRON	MUD	<1	8.1	1	55	20	170	492	31	<4	40	<0.1
HUMBOLT - NEVADA	PHILLIPS	MUD	4.5	25	9.2	4	4.7	120	53	61	9	78	< 1
IMPERIAL VALLEY - WESTMORELAND	MAPCO	MUD	<1	330	< 02	5	160	950	2220	24	4	5.7	<.1
IMPERIAL VALLEY - NILAND	REPUBLIC GEO	MUD	<1	120	< 2	5	120	550	1150	55	<4	170	< 1
IMPERIAL VALLEY - EAST MESA	REPUBLIC GEO	MUD	1.2	28	2	04	18	105	55	32	4	30	1
THE GEYSERS	AMINOIL USA	MUD	<1	81	8	40	.83	25	1	14	4	14	< 1
THE GEYSERS	UNOCAL	MUD	<1	34	< 2	< 04	2.5	46	<1	28	16	62	< 1
STEAMBOAT - NEVADA	PHILLIPS	MUD	<1	8.1	< 2	06	12	48	22	46	13	22	< 1
IMPERIAL VALLEY - EAST MESA	DOE/WESTEC	BRINE	<1	6.4	< 2	48	11	50	58	74	5	5.5	<.1
IMPERIAL VALLEY - EAST MESA	DOE/WESTEC	SCALE	<1	3.2	< 2	08	6.3	50	59	42	4.0	6.2	< 1
IMPERIAL VALLEY EAST MESA	DOE/MAGMA	BRINE	<1	840	< 2	3.7	400	1900	5370	1.8	2	6.5	< 1

Source See Appendix A

Tables III-11 and III-12 list 16 trace constituent concentrations for the same 11 samples. Eight of these constituents are EP toxicity contaminants. In addition to analyses for the eight EP toxicity contaminants, tests were also conducted for eight other metals. These metals (antimony, boron, beryllium, copper, lithium, nickel, strontium, zinc) were included because they are listed in the water quality standards of several western States. Analytical results for these metals are summarized in Table III-13. In general, the measured concentrations of these metals are fairly low, except for those of boron and zinc.

One other study (Morris 1981) provided analyses of a similar group of samples, with both major and trace elements. The results are presented in Tables III-11 and III-12 and are based on the acid extracts from the six solids samples. Four of the samples are from various drilling mud pits; the remainder are from the GLEF test facility. Two of the drilling mud samples are the same as those shown in Tables III-8, III-9, and III-10.

Analysis of Waste Constituents

Some of the exempt geothermal wastes characterized in the previous sections failed the EP characteristics test and could be considered hazardous wastes. The hazardous characteristics present include corrosivity and EP toxicity for certain metals.

The corrosive characteristic applies to wastes with pH values equal to or less than 2.0, or greater than or equal to 12.5. Maximum concentration levels for EP toxicity metal contaminants are as follows:

TABLE III-11 SOLID WASTE ACID EXTRACT TRACE ANALYSIS
(Units = parts per million)

SITE	OWNER	SAMPLE TYPE	As	Ba	Cd	Cr	Pb	Hg	Se	Ag	Sb	Be	B	Cu	Li	Ni	Sr	Zn
DESERT PEAK NEVADA	CHEVRON	MUD	<20	500	<5	<20	<20	<1	30	<20	<50	<20	230	200	300	<300	2600	140
HUMBOLT - NEVADA	PHILLIPS	MUD	<20	600	6	<20	400	<1	<20	<20	<50	<20	<200	<70	50	<300	3000	420
IMPERIAL VALLEY - WESTMORELAND	MAPCO	MUD	49	13000	20	<20	60	<1	100	<20	<50	<20	250	<70	3300	<200	23000	7000
IMPERIAL VALLEY - NILAND	REPUBLIC GEO	MUD	63	1800	6	<20	<20	<1	30	<20	<50	<20	<2000	<70	1300	<200	5400	1300
IMPERIAL VALLEY - EAST MESA	REPUBLIC GEO	MUD	<20	1400	<5	<20	30	<1	<20	<20	<50	<20	<2000	<70	<50	<200	2200	150
THE GEYSERS	AMINGIL USA	MUD	<20	1400	<5	70	20	<1	<20	<20	<50	<20	<200	<70	<50	<500	3500	80
THE GEYSERS	UNOCAL	MUD	<20	<300	<5	<20	<20	<1	<20	<20	<50	<20	870	<70	<50	300	600	300
STEAMBOAT - NEVADA	PHILLIPS	MUD	60	600	<5	<20	<20	<1	<20	<20	<50	<20	300	<70	500	<300	1000	120
IMPERIAL VALLEY - EAST MESA	DOE/WESTEC	BRINE	45	3800	<5	<20	<20	<1	<20	<20	<50	<20	<2000	<70	170	<200	8300	110
IMPERIAL VALLEY - EAST MESA	DOE/WESTEC	SCALE	36	10500	<5	<20	<20	<1	<20	<20	180	<20	<200	150	220	<200	<500	70
IMPERIAL VALLEY - EAST MESA	DOE/MAGMA	BRINE	230	5000	60	<20	200	<1	180	<20	<50	<20	12000	150	5800	500	12000	6400

Source See Appendix A

TABLE III-12 SOLID WASTE NEUTRAL EXTRACT TRACE ANALYSIS
(Units = parts per million)

SITE	OWNER	SAMPLE TYPE	As	Ba	Cd	Cr	Pb	Hg	Se	Ag	Sb	Be	B	Cu	Li	Ni	Sr	Zn
DESERT PEAK - NEVADA	CHEVRON	MUD	<20	<300	<5	39	<20	<1	<20	<20	<50	<20	470	100	200	<300	<500	50
HUMBOLT NEVADA	PHILLIPS	MUD	140	500	5	27	400	<1	<20	<20	<50	<20	<200	100	<50	<300	<500	280
IMPERIAL VALLEY - WESTMORELAND	MAPCO	MUD	41	6800	<5	<20	<20	<1	120	<20	50	20	1100	70	3100	<200	20000	<20
IMPERIAL VALLEY - NILAND	REPUBLIC GEO	MUD	<20	<300	<5	<20	<20	<1	20	<20	<50	<20	200	<70	1100	<200	1500	<20
IMPERIAL VALLEY - EAST MESA	REPUBLIC GEO	MUD	<20	<300	<5	<20	<20	<1	<20	<20	<50	<20	<200	<70	<50	<200	<500	<20
THE GEYSERS	AMINOIL USA	MUD	20	<300	<5	<20	<20	<1	<20	<20	<50	<20	<200	<70	<50	<500	<500	<20
THE GEYSERS	UNOCAL	MUD	32	<300	<5	<20	<20	<1	<20	<20	<50	<20	15000	<70	<50	500	<500	<20
STEAMBOAT - NEVADA	PHILLIPS	MUD	260	<300	<5	<20	<20	<1	<20	<20	70	<20	570	<70	400	<300	<500	<20
IMPERIAL VALLEY - EAST MESA	DOE/WESTEC	BRINE	65	600	<5	<20	<20	<1	<20	<20	<50	<20	<200	<70	130	<200	<500	<20
IMPERIAL VALLEY - EAST MESA	DOE/WESTEC	SCALE	33	300	<5	<20	<20	<1	<20	<20	180	<20	<200	70	140	<200	<500	<20
IMPERIAL VALLEY - EAST MESA	DOE/MAGMA	BRINE	230	5400	60	<20	<20	<1	220	<20	<50	<20	13000	<70	7900	<200	15000	4000

Source: See Appendix A

Table III-13 Metals Detected in the Extracts of Geothermal Solid Wastes from the Imperial Valley Area[a]

	Well drilling mud and cuttings				Scale	Brine precipitate
Owner:	Occidental	Occidental		MAPCO	GLEF[d]	GLEF
Well designation:	Fed Lease[b]	Neasnam	Republic	Fee-1	Courier-1	
Constituent (mg/L):						
Ag	< 01	< 01	< 01	< 01	01	02
As[c]	< 50	< 5	<1 0	<1 0	< 5	< 5
Ba	30	5	3 0	25 0	3 5	7 0
Cd	< 10	< 1	< 1	< 1	< 1	< 2
Cr	< 02	< 01	< 03	< 03	< 02	< 04
Hg[c]	<1.0	<1 0	<1 0	<1 0	<1.0	<1.0
Pb	< 1	< 1	06	1	7.0	.07
Se[c]	< 5	< 5	< 5	< 5	Int.	Int.
B	02	1	2 0	6 0	4 0	7.0
Be	< 003	< 003	< 01	< 01	< 007	< 01
Cu	< 02	02	01	03	7	1 0
Li	02	04	3 0	10 0	15 0	30 0
Ni	5	1	1	2	07	< 02
Sb	< 1	< 1	< 2	< 3	< 2	< 4
Sr	1 0	2 0	10 0	25 0	5 0	13 0
Zn	< 1	< 1	5	15 0	5	7
Al	05	6	2	1	07	1
Ca	MC	MC	MC	MC	MC	MC
Co	< 03	< 03	< 03	< 03	< 02	< 04
Fe	2 0	2 0	1 0	1 0	2	< 4
K	5 0	40 0	MC	MC	MC	MC
Mg	10 0	10 0	10 0	15 0	2 0	3 0
Mn	4	1 3	4 0	10 0	5 0	10 0
Mo	< 03	< 03	1	< 1	< 1	< 1
Na	MC	MC	MC	MC	MC	MC
Rb	< 1	15	1 0	2 0	1 0	1 0
Si	5 0	30 0	10 0	3 0	2 0	4 0
Sn	< 1	< 1	< 1	< 1	< 1	< 1
Ti	< 1	< 1	< 3	< 3	< 1	< 1
V	< 1	< 1	< 1	< 1	< 2	< 4

Int = Interference.

MC = Major constituent, ranging from approximately 5,000 mg/L to higher levels

[a]Determinations by optical emission spectroscopy, except as noted.

[b]Values represent mean of five samples analyzed

[c]As, Hg, and Se were determined by atomic absorption spectrophotometry. Interference on Hg precludes lower detection level of Hg

[d]GLEF - Geothermal Loop Experimental Facility

Source: Morris 1981

Metal contaminant	Maximum concentration (mg/L)
Arsenic	5.0
Barium	100.0
Cadmium	1.0
Chromium	5.0
Lead	5.0
Mercury	0.2
Selenium	1.0
Silver	5.0

Two of the three brine samples, characterized in Table III-6, exceed allowable levels of RCRA hazardous characteristics. The sample from the Niland site exhibits the corrosivity characteristic, with a pH of 1.6, and also exceeds the EP toxicity concentration for barium. The brine sample from the Westmoreland site exceeds the EP toxicity limits for the following four metals: arsenic, cadmium, lead, and selenium. Similarly, the three geothermal brine samples characterized in Table III-7 also exceed allowable contaminant concentrations for arsenic, barium, and lead.

Sufficient constituent data are not available to further evaluate the other waste streams with respect to the EP toxicity contaminant concentrations.

DISCUSSION OF DATA ADEQUACY

Sufficient data are not available to accurately characterize or precisely quantify the volumes of wastes generated from power production and drilling activities related to geothermal operations. Waste information available in the literature applies only to a few site-specific cases. Since the characteristics of geothermal wastes relate directly to the geology and mineralogy of a resource area, additional site-specific data are required to more fully characterize geothermal industry wastes.

The available historical data are insufficient to project future total volumes of drilling mud and cuttings expected to be generated by the geothermal industry. To predict future waste disposal requirements and associated potential problems, an accurate historical record must be established, from which to extrapolate. The types of data needed are not generally published in the literature, and industry cooperation is essential. Information must be obtained concerning volume, characteristics, and chemical constituents of mud pit solids, drill cuttings, and injected fluids.

CHAPTER IV

WASTE MANAGEMENT PRACTICES

This chapter describes current and alternative waste disposal practices for wastes generated from geothermal exploration, development, and production operations. An economic analysis and cost comparison of current and alternative practices is also included.

CURRENT WASTE MANAGEMENT PRACTICES

The following discussions pertain to waste management techniques practiced during geothermal drilling, power production, and direct applications.

Waste Management Practices for Waste Products from Drilling Operations

The primary wastes from both geothermal and petroleum industry drilling activities are drilling muds and drill cuttings. Methods currently practiced by the geothermal industry for handling and disposal of these materials have generally been developed by the petroleum industry.

A review of the literature revealed only two references that addressed the handling and disposal of wastes from geothermal drilling activities. In both cases the wastes are discharged into a reserve pit. At Heber, in Imperial Valley, California, drilling wastes are discharged into a reserve pit, from which the wastes are collected for offsite disposal (USDOE 1980b).

One reference (Royce 1985) describes the drilling-waste handling and disposal methods used at The Geysers. These waste management methods reflect current regulatory policies in California. At The Geysers, an onsite reserve pit is constructed with a two-foot-thick clay liner, having a permeability of less than 10^{-6}cm/s. Wastes remaining in the pit are tested by the RCRA characteristic test to determine if they are nonhazardous. Wastes that are determined to be hazardous are transported to approved hazardous waste disposal sites. For more details on waste toxicity testing and approved waste disposal facilities, see the Summary of California's Geothermal Regulations in Chapter VII. (Please note that California may consider some of the exempt wastes hazardous under its State regulations, even though they are exempt.)

After the solids settle and the liquid is pumped off for well injection, the reserve pit is capped. Reserve pit dewatering consists merely of allowing any remaining liquids to evaporate from its surface before backfilling. A more complex technology involves the use of alum and polymers as flocculants to induce settling. After separation of the liquid and solids, the liquid is discharged and the thickened solids are covered with backfill. Associated with this method, however, is the possibility that future contamination could result from the leachate waste sludge that remains buried at the site (Hansen, et al. undated).

Landfarming is another reserve pit disposal option. This method involves the mechanical distribution and mixing of reserve pit waste into soils in the vicinity of the drill site (Fairchild 1985; Hansen, et al. undated). In the petroleum industry, this method of disposal is controversial because of the high chloride content of drilling wastes in some geographical locations (Tucker 1985; Hansen, et al. undated). In California, offsite waste disposal is used to dispose of hazardous wastes (i.e., the State of California's definition of hazardous waste) from

geothermal drilling. Instead of being removed by vacuum truck, however, the reserve pit contents are allowed to desiccate, and the solids are transported to an approved disposal site.

Stringent permitting requirements and State prohibitions limit downhole disposal of drilling wastes (Hansen, et al. undated). This method is not particularly effective for geothermal drilling operations, and might actually have an adverse effect on the development of the geothermal well.

Solidification of reserve pit wastes may be economically more attractive than backfilling them. Solidification methods typically involve mixing fly ash or kiln dust with the reserve pit wastes to decrease the overall moisture content of the wastes and to stabilize the mixture (Hansen, et al. undated). One reference (Hansen, et al. undated) stated that problems associated with solidification include the potential for leaching toxic metals, organics, and nonmetallics (particularly chlorides) into ground water, or the possible bioaccumulation of these constituents in plants and the food chain.

After completion or abandonment of a well, drilling mud and cuttings remain in the reserve mud pit. The following quote from Rafferty (1985) is offered to provide some perspective on the nature of the reserve pit.

> "In the early days of drilling, the reserve pit was used to remove drilled solids and store the active mud system. As more advanced solids control and drilling fluid technology became available to the oil and gas industry, mud tanks began replacing the reserve pit as the storage and processing area for the active mud system. Today's reserve pit is little more than an oversized collection point for drill site waste, wellbore cuttings, and rainwater."

Fairchild (1985) lists the following five methods for handling reserve pit contents:

- Dewatering pit wastes, with subsequent backfilling;
- Landfarming the wastes into surrounding soils;
- Removing the waste with a vacuum truck and hauling it to an offsite pit;
- Pumping the waste down the well annulus; and
- Chemical solidification of the wastes.

Waste Management Practices for Power Generation Facilities

Seven types of liquid waste disposal have been described in the literature for power generation facilities:

1. Direct release to surface waters;
2. Treatment and release to surface waters;
3. Closed-cycle ponding and evaporation;
4. Injection into a producing horizon;
5. Injection into a nonproducing horizon;
6. Treatment and injection; and
7. Consumptive secondary use.

An international review of waste disposal methods showed potential applications for each of these methods depending on the legal, technical, and environmental aspects of the different power generation sites (USDOE 1980a). At least four of the above-mentioned disposal methods are being practiced or will be implemented at the 21 geothermal power generation facilities that are currently operational or under construction. Data on these four disposal methods are summarized in Table IV-1. A brief description of the seven methods follows, along with a discussion of the sites where each type is practiced.

Direct Release to Surface Waters

Direct release to surface waters is the simplest disposal method. This approach consists of discharging spent fluid to local drainage systems. While this method has previously been practiced at all power generation facilities (USDOE 1980a), current environmental constraints have made it almost nonexistent for facilities in the United States. One small binary facility (Wendell-Amedee, Wendell Hot Springs) has been identified as discharging waste liquids to surface waters (California Division of Oil and Gas 1985). This situation is justified because of the high quality of the brine, as is indicated in Table III-4.

Treatment and release to surface waters can be a relatively simple process. It can become costly, however, depending on the type of treatment required. Treatment can vary from simply settling and flocculating the waste fluids, to sophisticated physical/chemical processes (USDOE 1980a). In this study, no power facilities were identified as using this type of brine treatment.

Closed-Cycle Ponding

Closed-cycle ponding and evaporation consists of cycling the spent brine through one or a series of ponds where salts can settle out and the liquid can evaporate. Ponds can be either natural or manmade. While no power generation facilities in the U.S. currently use this method, it could be applicable in areas where the climate is arid and land is relatively inexpensive (USDOE 1980a).

Injection of Liquid Wastes

Injection of liquid wastes into the producing horizon consists of recycling the spent brine back into the same geothermal reservoir at a

TABLE IV-1 WASTE DISPOSAL PRACTICES
FOR GEOTHERMAL POWER GENERATION FACILITIES

NAME	ST/COUNTY	DIRECT RELEASE SURFACE WATER	INJECTION INTO PRODUCING HORIZON	TREATMENT AND INJECTION	CONSUMPTIVE SECONDARY USE
NILAND	CA IMPERIAL		X		
EAST MESA	CA IMPERIAL		X		
EAST MESA (B C MCCABE NO 1)	CA IMPERIAL		X		
HEBER	CA IMPERIAL		X	X	X
HEBER	CA IMPERIAL		X		
SALTON SEA	CA IMPERIAL		X	X	
SALTON SEA (VULCAN)	CA IMPERIAL		X	X	X
COSO	CA INYO		X		
WENDELL-AMEDEE (HONEY LAKE)	CA LASSEN		X		
WENDELL-AMEDEE (WENDELL HOT SPRINGS)	CA LASSEN	X			
MONO-LONG VALLEY (CAS DIABLO)	CA MONO		X		
PUNA NO 1	HI HAWAII		X		
LIGHTING DOCK	NM HIDALGO		X		
BRADY HAZEN	NV CHURCHILL		X		
FISH LAKE	NV ESMERALDA		X		
BEOWAWE	NV LANDER/EUREKA		X		
WABUSKA HOT SPRINGS	NV LYON				X
DESERT PEAK	NV RENO		X		
STEAMBOAT SPRINGS	NV WASHOE		X		
COVE FORT-SULFERDALE	UT BEAVER		X		
ROOSEVELT HOT SPRINGS - MILFORD	UT BEAVER		X		

Source. See Appendix A

different location. These injection wells are considered Class V under the Federal UIC program. Injection of spent fluids back into the producing horizon is not only an important waste disposal practice, but also is necessary for maintaining reservoir fluid volume. This process has to be carefully planned to ensure injection into a zone that is sufficiently permeable to handle large volumes of liquid. Brine chemistry must be controlled to prevent plugging of the injection well or reservoir. Also, the injection well should be far enough away from the production well to prevent cooling of the production brine. Even with such constraints, 22 power generators practice this method of disposal. This is the most frequently used liquid waste management practice for U.S. power generation facilities.

Injection into a Nonproducing Zone

Injection into a nonproducing horizon is identical to the management practice previously mentioned, except the injection well is drilled to a zone that is separated from the production well (USDOE 1980a). This is primarily done in regions where the production zone is fractured and can be easily contaminated by the cooler injection fluid. Injection into a nonproducing zone has been tested at only one location. Tests of injection into a nonproducing horizon at the Roosevelt Hot Springs flash facility in Utah proved successful in 1980 (USDOE 1980a).

Treatment and Injection

Treatment and injection is used either where the brine quality is so poor that the potential for plugging is high, or where a usable byproduct could be recovered from brine before injection. Several examples of pretreatment to prevent plugging are currently operational in the United States. The Salton Sea flash facilities in the Imperial Valley operate a

crystallizer/clarifier processing arrangement for silica removal prior to injection (Royce 1985). Unocal uses this same process and is investigating the conversion of the silica solids waste product into a commercial product (Morton 1986).

Consumptive Secondary Use

Consumptive secondary use of liquid wastes is an effective waste disposal method when the spent fluid can be reused as part of the power generation process or by some adjacent facility. Six of the facilities shown in Table IV-1 reuse condensate or clarified brine as makeup water to the cooling towers. The Wabuska Hot Spring facility in Nevada discharges warm water to a neighboring fish farm, where the water passes through a series of fish ponds and is then discharged to other surface waters (Lienau 1986).

The solid wastes can be managed by either onsite or offsite disposal. In some instances, a combination of both alternatives is used. Some facilities use brine holding ponds to accumulate solids. Once these ponds are full, the material is excavated and hauled to a landfill, in much the same way as desiccated drilling mud. Some facilities, such as Unocal, produce a solid material that is filtered and then hauled to a California Class I, II, or III landfill, depending on the results of the toxicity tests with regard to RCRA characteristics (Morton 1986). Small quantities of waste generated, such as scale, are collected in 35-gallon drums onsite and then hauled to the appropriate disposal facility (Morton 1986).

Waste Management Practices for Direct Users

The seven methods of liquid waste disposal for power generation facilities are applicable to, but not necessarily required by, the direct users. Table IV-2 presents the waste disposal status for 104 direct users in 12 States. Both the closed-cycle ponding and the treatment and injection waste management options have been excluded from the table because no facilities using these methods have been identified. For each of the five methods shown in the table, at least one example of the waste disposal practice has been found in the literature.

Direct release to surface waters is by far the most common method of liquid disposal for direct users; of the 104 direct users listed, 90 discharge their wastewater directly to surface waters. This practice is justified because of the low flow rates and the high quality of the geothermal fluid being discharged. Some States (e.g., Oregon) have begun to encourage direct users to switch to injection because aquifer levels have seriously dropped in some areas.

Injection into the producing horizon is the next most common method of disposal. Fourteen sites are currently listed as using this method, with an increase expected in the future.

Consumptive secondary use is practiced at two facilities (White Sulfur Springs, Montana, and Newcastle, Utah). Both facilities discharge into holding basins where the water is collected for irrigation.

ALTERNATIVE WASTE MANAGEMENT PRACTICES

Although several refinements to existing processes have been mentioned in the literature, very little information is available on new disposal methods. This relative lack of research studies on alternative

TABLE IV 2 WASTE DISPOSAL PRACTICES FOR DIRECT USERS

NAME	ST/COUNTY	BRINE FLOW RATE (MGY)	DISPOSAL METHOD: DIRECT RELEASE SURFACE WATER	TREATMENT RELEASE SURFACE WATER	INJECTION INTO PRODUCING HORIZON	INJECTION NONPRODUCING HORIZON	CONSUMPTIVE SECONDARY USE
SUSANVILLE	CA LASSEN	66	X				
SUSANVILLE	CA LASSEN	125	X				
SUSANVILLE - NURSEY	CA LASSEN	39	X				
WENDELL-AMEDEE	CA LASSEN	76	X				
CEDARVILLE HIGH SCHOOL ELEMENTARY SCHOOL	CA MODOC	16	X				
FORT BIDWELL	CA MODOC	31	X				
FORT BIDWELL - DISTRICT HEATING	CA MODOC	4	X				
FORT BIDWELL - FISH	CA MODOC	39	X				
MAMMOTH LAKES - DISTRICT HEATING	CA MONO	226			X		
MAMMOTH LAKES - FISH	CA MONO	9			X		
INDIAN VALLEY HOT SPRINGS (GREENVILLE)	CA PLUMAS	37	X				
COACHELLA	CA RIVERSIDE	262	X				
ELSINORE HOT SPRINGS	CA RIVERSIDE	8	X				
MECCA	CA RIVERSIDE	328	X				
SAN BERNADINO - DISTRICT HEATING	CA SAN BERNADINO	67	X				
SAN BERNADINO - INDUSTRIAL	CA SAN BERNADINO	73	X				
PASO ROBLES	CA SAN LUIS OBISPO	9			X		
BOULDER - GREENHOUSE	CO	41	X				
SALIDA	CO	10	X				
ALAMOSA	CO ALAMOSA	131	X				

TABLE IV-2 (continued)

NAME	ST/COUNTY	BRINE FLOW RATE (MGY)	DISPOSAL METHOD: DIRECT RELEASE SURFACE WATER	TREATMENT RELEASE SURFACE WATER	INJECTION INTO PRODUCING HORIZON	INJECTION NONPRODUCING HORIZON	CONSUMPTIVE SECONDARY USE
PAGOSA SPRINGS	CO ARCHULETA	157	X				
GLENWOOD SPRINGS	CO GARFIELD	157	X				
OURAY HOT SPRINGS	CO OURAY	6	X				
BOISE CITY	ID ADA	262				X	
BOISE WARM SPRINGS	ID ADA	188	X				
HUNT	ID ADA	32	X				
IDAHO STATE CAPITAL MALL	ID ADA	131			X		
THE EDWARD'S GREENHOUSE	ID ADA	93	X				
VETERAN'S ADMINISTRATION MEDICAL CENTER	ID ADA	39	X				
DONLAY RANCH HOT SPRINGS	ID BOISE	9	X				
GARDEN VALLEY	ID BOISE	39	X				
HOT SPRINGS	ID CAMAS	4	X				
CALDWELL	ID CANYON	184			X		
NAMPA	ID CANYON	95			X		
HOOPER SPRINGS	ID CARIBOU	32	X				
ALMO	ID CASSIA	26	X				
BURLEY	ID CASSIA	12	X				
SCROOP'S GREENHOUSE	ID CASSIA	1	X				
MALAD CITY	ID ONEIDA	499			X		
BANK'S	ID OWYHEE	17	X				
BRUNEAU	ID OWYHEE	38	X				
HOT SPRINGS	ID OWYHEE	49	X				
MARSING	ID OWYHEE	9	X				
BUHL	ID TWIN FALLS	3	X				
BUHL	ID TWIN FALLS	58	X				

TABLE IV-2 (continued)

NAME	ST/COUNTY	BRINE FLOW RATE (MGY)	DISPOSAL METHOD: DIRECT RELEASE SURFACE WATER	TREATMENT RELEASE SURFACE WATER	INJECTION INTO PRODUCING HORIZON	INJECTION NONPRODUCING HORIZON	CONSUMPTIVE SECONDARY USE
BUHL - CAL FLINT	ID TWIN FALLS	43	X				
BUHL - FLINT	ID TWIN FALLS	86	X				
BUHL M&L	ID TWIN FALLS	1 01	X				
BUHL - RAY	ID TWIN FALLS	11 50	X				
TWIN FALLS	ID TWIN FALLS	1 73	X				
WARM SPRINGS STATE HOSPITAL	MT DEER LODGE	9	X				
ENNIS	MT MADISON	4	X				
ENNIS	MT MADISON	3	X				
WHITE SULFUR SPRINGS	MT MEAGHER	9					X
WHITE SULFUR SPRINGS	MT MEAGHER	58	X				
AVON	MT MISSOULA	2	X				
LOLO	MT MISSOULA	12	X				
JAMES SPRINGS	NM	4	X				
LAS ALTURAS	NM DONA ANA	0	X				
LAS CRUCES SPACE HTG & GREENHOUSE	NM DONA ANA	60					X
APPACHE TEJO AND KENNECOTT WARM SPRINGS	NM GRANT	1 09	X				
GILA HOT SPRINGS - SPACE HTG & POOL	NM GRANT	20	X				
ANIMAS	NM HIDALGO	94	X				
ANIMAS	NM HIDALGO	10	X				
ANIMAS	NM HIDALGO	3	X				
TRUTH OR CONSEQUENCES	NM SIERRA	5	X				
RENO	NV	72	X				

TABLE IV-2 (continued)

NAME	ST/COUNTY	BRINE FLOW RATE (MGY)	DISPOSAL METHOD: DIRECT RELEASE SURFACE WATER	DISPOSAL METHOD: TREATMENT RELEASE SURFACE WATER	DISPOSAL METHOD: INJECTION INTO PRODUCING HORIZON	DISPOSAL METHOD: INJECTION NONPRODUCING HORIZON	DISPOSAL METHOD: CONSUMPTIVE SECONDARY USE
RENO - POOL	NV	16	X				
BRADY HOT SPRINGS	NV CHURCHILL	1 03	X				
CARLIN (H P)	NV ELKO	29	X				
ELKO HOT SPRING	NV ELKO	1 01	X				
ELKO JUNIOR HIGH SCHOOL	NV ELKO	43	X				
CALIENTE - SPACE HEATING	NV LINCOLN	7	X				
CALIENTE - SPACE HTG & POOL	NV LINCOLN	22	X				
WABUSKA	NV LYON	0	X				
FIRST CHURCH OF RELIGIOUS SCIENCE	NV RENO	9			X		
VETERANS ADMINISTRATION MEDICAL CENTER	NV RENO	43					
MOANA GEOTHERMAL AREA	NV WASHOE	43			X		
MOANA GEOTHERMAL AREA	NV WASHOE	22			X		
WELLS (H P)	NV WELLS	7	X				
AUBURN	NY CAYUGA	22	X				
MERRILL	OR	14	X				
KLAMATH FALLS - DISTRICT HEATING (INJECT)	OR KLAMATH	40			X		
KLAMATH FALLS - DISTRICT HEATING (SURF)	OR KLAMATH	1 04	X				
KLAMATH FALLS - POOL	OR KLAMATH	4	X				
KLAMATH FALLS - SPACE HEATING (INJECT)	OR KLAMATH	50			X		
KLAMATH FALLS - SPACE HEATING (SURF)	OR KLAMATH	2 08	X				

TABLE IV-2 (continued)

NAME	ST/COUNTY	BRINE FLOW RATE (MGY)	DISPOSAL METHOD: DIRECT RELEASE SURFACE WATER	TREATMENT RELEASE SURFACE WATER	INJECTION INTO PRODUCING HORIZON	INJECTION NONPRODUCING HORIZON	CONSUMPTIVE SECONDARY USE
HUNTERS HOT SPRINGS	OR LAKE	10	X				
LAKEVIEW - GREENHOUSE	OR LAKE	14	X				
LAKEVIEW - POOL HEATING	OR LAKE	3	X				
LAKEVIEW SPACE HEATING	OR LAKE	10	X				
SUMMER LAKE	OR LAKE	3	X				
VALE	OR MALHEUR	126	X				
VALE	OR MALHEUR	11	X				
COVE HOT SPRINGS	OR UNION	39	X				
HOT SPRINGS	SD	655	X				
PHILIP GREENHOUSE	SD HAAKON	35	X				
PHILIP DISTRICT HEATING SYSTEM	SD HAAKON	45	X				
ST MARY'S HOSPITAL	SD HUGHES	48	X				
NEWCASTLE	UT IRON	33					X
BLUFFDALE	UT SALT LAKE	53	X				
SANDY	UT SALT LAKE	157	X				
UTAH STATE PRISON	UT SALT LAKE	66	X		X		
SOL DUC HOT SPRINGS - SPACE HTG & POOL	WA CLALLAM	10	X				
EPHRATA	WA GRANT	0	X				
YAKIMA	WA YAKIMA	92	X				
LANDER	WY FREMONT	6	X				
THERMOPOLIS	WY HOT SPRINGS	131	X				
JACKSON	WY TETON	17	X				

disposal methods may be due to an absence of damage cases resulting from geothermal wastes and to the relatively small volume of RCRA-exempt waste that is not injected into a subsurface reservoir. If these conditions should change, requiring the development of alternative disposal methods, similar, but more stringent, methods would probably be used. For example, liquid wastes now injected into a Class V well would most likely be injected into a Class II well, and solids that are disposed of by onsite burial would probably be sent to an offsite, permitted facility or an upgraded onsite facility (see Table IV-3). California currently regulates these injection wells in a manner similar to Class II wells. The California Division of Oil and Gas prefers this alternative because geothermal operations and oil and gas operations are similar. Landfarming may be another alternative. If, at some future date, it appears necessary to restrict land disposal of solid wastes, then solidification might become an acceptable option.

As new geothermal resources are developed, the chemical constituents of the fluids may vary considerably. Such chemical variation could lead to the discovery of new constituent recovery operations.

A new liquid waste disposal practice, developed by Aquatech Services, Inc., consists of a proprietary evaporation process for disposal of spent brines. However, this practice is better suited to the oil and gas industry. The stated evaporation capacities of 16,800 gallons per day are much less than normal power plant flow rates; however, there are some small direct users for which this rate is applicable. Since the process is viewed as competitive with injection costs, it could be applied in some direct use operations.

Table IV-3 Waste Management Practices

Current Practices	Alternative Practices
Liquid Wastes:	
Injection into Class V injection well	Injection into Class II well, or surface impoundment with double liner
Solid nonhazardous wastes:	
Onsite burial	Offsite disposal in permitted Class II or III waste management unit
Solid designated wastes:	
Onsite burial in lined pit, or disposal in offsite permitted facility	Landfarm or offsite disposal in Class I permitted waste management unit or solidification
Solid hazardous wastes	
Onsite burial in clay cell, or disposal in permitted offsite Class I facility	Solidification

Key

Class V injection well -	Federal Underground Injection Control (UIC) Program classification for geothermal injection well
Class II injection well -	Injection well used to dispose of nonhazardous fluids, generally brines associated with oil and gas production
Class I waste management unit -	Most secure, double-lined landfill, surface impoundment, or waste pile, RCRA-approved facility
Class II waste management unit -	Landfill, or surface impoundment class designed for "designated wastes", commonly used for drilling muds, fluids, cuttings, sump solids.
Class III waste management unit -	Onsite or offsite landfill for nonhazardous, nondesignated wastes

In the event that the current exemption were lifted for one or more waste categories, such wastes, if hazardous, would become subject to RCRA Subtitle C procedures and requirements. Any facility handling any such newly-defined hazardous waste would be required to comply with all applicable minimum technological requirements, as well as permitting conditions for ground-water monitoring, closure and post-closure requirements, and, where necessary, corrective action. These newly defined wastes would also become subject to review under the land disposal restrictions program. This could lead to further restrictions on allowable waste management practices.

It is not possible, in advance of these formal reviews, to anticipate which "best demonstrated available technologies" (BDAT) would eventually be required under Subtitle C to manage any hazardous oil and gas wastes. Therefore, for the purposes of this report, the Agency has estimated the potential costs of increased control by assuming compliance with existing Subtitle C performance standards. It has also estimated the costs of stabilization of drilling wastes.

In addition to the ground-water monitoring requirements that are a mandatory part of standard Subtitle C permit conditions, the technologies selected to represent potential additional costs of waste management under Subtitle C include:

- For drilling fluids: disposal using a synthetic composite liner with leachate collection and site management processes consistent with Subtitle C, a landfarming facility employing Subtitle C site management practices, a hazardous waste incinerator, or stabilization of drilling wastes.
- For geothermal fluid waste: the use of Class I disposal wells as defined under the Underground Injection Control Program.

ECONOMIC ANALYSIS OF WASTE MANAGEMENT PRACTICES

The geothermal industry is not pursuing alternatives to current waste disposal practices, possibly because wastes from geothermal operations are relatively small in volume (see Table III-1) and have caused no documented environmental damage. Thus, a comparison of the costs and economic impacts of current and alternative practices would be problematic. Nevertheless, some available cost data are presented herein and the gross cost impacts of the most likely alternative practices are calculated. This brief analysis is limited to residual drilling wastes.

Cost Estimation Methodology

Published cost data in the literature were not only out of date (1975-1978), but were primarily rough estimates of waste disposal costs rather than actual costs. Also, most publications dealing with the cost of geothermal waste disposal used one article published in 1979 as the basis for their discussions.

For these reasons, cost estimates for alternative waste management methods for drilling wastes are adapted from Volume 1 of this report. In this report, surface impoundment costs for four different scenarios are developed. They are: a one-quarter acre, onsite, unlined pit; a one-quarter acre, onsite, single-lined pit; a 15-acre, offsite, single-lined pit; and a 15-acre, offsite, triple-lined pit. The annualized, per barrel costs for these options are presented in Table IV-4. These annualized costs include a seven cent per barrel cost for monitoring the single-lined, 15-acre facility and a two cent per barrel cost for monitoring the triple-lined, 15-acre facility.

These estimates are national averages, although the costs for EPA Region IX, which includes California, are the same or slightly less. These estimates do not include transportation costs, which would be site specific and would depend upon the distance traveled. Volume 1 of this report estimates the cost for transporting nonhazardous drilling muds at approximately two cents per barrel-mile.

As documented in the Oil and Gas Report to Congress, comparable costs to those in Table IV-4 for more advanced waste management methods for drilling wastes are as follows: The costs for solidification range from $3.00 to $10.00 per barrel, with the average estimated to be approximately $6.00 per barrel. The annualized cost for landfarming in California ranges from $16 per barrel for a pre-interim status facility to about $38 per barrel for a facility complying completely with RCRA requirements. These differences stem from the elaborate site management, monitoring, closure, and post-closure procedures required of a facility complying with Part 264 requirements. The solidification estimates do not include final disposal costs and neither estimate includes transportation costs. Even without these added costs, the cost for solidification is comparable to that of the triple-lined disposal facility, and the landfarming cost far exceeds that of the triple-lined facility.

The Estimated Impact of Alternative Waste Management Practices

Alternative treatment and disposal methods are not being pursued by the geothermal industry. Nevertheless, at some future time, alternative disposal practices may be required. Therefore, in order to provide some guidance on the potential cost impact of these alternatives, the costs

Table IV-4 Annualized Per Barrel Surface Impoundment Cost

Type of facility	Cost
Unlined, one-quarter acre	$2.04
Single-lined, one-quarter acre	4.46
Single-lined, 15-acre	1.04
Triple-lined, 15-acre	6.78

Source: Estimates contained in Volume 1 of this report.

for several waste management practices are presented in Table IV-5. The alternatives are those discussed above.

Forecast of Future Profitability for the Geothermal Industry

The recent declines in energy prices and demand for electrical power, as well as cutbacks in government support and incentives, have resulted in a consolidation phase for the geothermal industry. Development will continue at The Geysers in northern California, however, because of the area's favorable economics situation. Exploration for new resources has dropped significantly, with most new drilling occurring at currently operating fields (Wallace 1986).

Geothermal energy production increased during 1986, primarily because of increases in direct use projects and small-scale modular binary units for reduced-cost electrical power generation. Electrical power generation capacity for 1986 remained basically unchanged from 1985. Under the current energy market conditions, future developments will be restricted to expanding existing economic fields (Wallace, et al. 1987). As existing older plants reach their economic life and are phased out, geothermal electrical power generation capacity may actually decrease, resulting from the poor economics and the higher economic risk involved in establishing a new facility rather than in operating an existing one in the current energy market.

The future profitability of the geothermal industry is tied directly to the price of energy available from other sources, primarily hydrocarbon fuels. When the price of these fuels rises again, the level of new geothermal field development will increase as well. For most current producers, the profit margins have been reduced significantly in the past several years.

Table IV-5 Total Annual Cost of Alternative Waste Management Practices[a]
(In 1985 dollars, based on 1985 waste volumes)

	Location		
Waste management alternative	The Geysers	Imperial Valley	Other
One-quarter acre, unlined surface impoundment	$ 108,936	$ 112,404	$ 4,896
One-quarter acre, single-lined, surface impoundment	238,164	245,746	10,704
Fifteen acre, single-lined, surface impoundment	55,536	57,304	2,496
Fifteen acre, triple-lined, surface impoundment	363,120	374,680	16,320
Thirty-five acre, pre-interim status landfarm	853,866	881,049	38,376
Thirty-five acre, Part 264 compliance landfarm	1,942,692	2,004,538	87,312
Solidification[b,c]	320,400	330,600	14,400

[a]Transportation cost excluded from all alternatives

[b]Final disposal cost not included

[c]Based on average cost of $6 per barrel

CHAPTER V

DAMAGES CAUSED BY GEOTHERMAL OPERATIONS

A total of 42 State and local contacts were made in connection with geothermal energy damage cases. No significant cases of damages were found associated with the exploration, development, or production of geothermal energy. In fact, only two incidents relating to potential damage cases were identified. The two reports of pollution from geothermal waste in The Geysers area of California were obtained from the California Division of Oil and Gas.

One of The Geysers incidents occurred in Lake County, where a waste sump containing drilling fluids and bentonite muds was pumped and discharged into an adjacent gully during a period of high rainfall. This discharge caused a temporary increase in the turbidity of a nearby stream, resulting in a small fish kill. The incident was published in a local newspaper, but was not officially documented or studied. This incident was exceptional because there are established procedures for injecting waste drilling fluids during periods of unusual rainfall.

In Sonoma County, a sump-pumping truck loaded with drilling fluids and brine illegally dumped its contents along a roadside. This incident was documented by the local Regional Water Quality Control Board.

The lack of significant damage cases indicates that existing regulatory programs are probably effective.

CHAPTER VI

RISK ASSOCIATED WITH GEOTHERMAL OPERATIONS

INTRODUCTION

Section 8002(m) of the Solid Waste Disposal Act, as amended in 1980, requires EPA to conduct a detailed and comprehensive study of drilling fluids, produced fluids, and other wastes associated with the exploration, development, and production of geothermal energy. Furthermore, Section 8002(m)(1)(C) specifically directs EPA to analyze the potential danger to human health and the environment resulting from these activities.[1] A risk analysis undertaken to help fulfill the requirements of Section 8002(m)(1)(C) is presented in this chapter.

The objectives of this assessment were to:

- Characterize the major risk-influencing factors (i.e., waste types, waste quantities, waste management practices, and environmental settings) associated with geothermal energy activities;
- Attempt to identify the types of wastes, management practices, and environmental settings that occur most frequently across the spectrum of geothermal energy facilities/sites, within the limitations of available data;
- Develop model facilities based upon characterization of the geothermal energy industry; and
- Qualitatively assess the range of potential baseline health and environmental risks posed by the model facilities developed.

---

[1] References in this chapter to geothermal energy facilities, sites, or activities generally refer to exploration, development, and production operations.

For the geothermal energy industry, a qualitative analysis rather than a quantitative risk modeling analysis was conducted. The analysis was based on data and information gained from a literature review; these data have been summarized in the preceding chapters of this report. The industry data available from the literature are neither comprehensive nor fully reliable. For example, the reliability of the waste composition data is suspect because of the lack of reported quality assurance controls. EPA's literature review was supplemented by site visits and by an examination of environmental settings at geothermal energy sites. Overall, EPA has determined that the quantity and quality of data available do not warrant quantitative risk modeling at this time. In addition, because of the limited data available and the lack of comprehensive data on all but a few facilities, EPA has chosen to assess risks by analyzing a range of conditions at "model facilities" rather than by analyzing the conditions at individual existing facilities.

In conjunction with this report, EPA prepared a risk assessment report on the oil and gas industry (Volume 1, Chapter V). The oil and gas risk analysis is based primarily on a quantitative risk modeling approach. Because the waste types and waste management practices for the two industries are similar, EPA used the initial risk results for oil and gas activities as a reference for qualitative assessment of the potential risks posed by the geothermal energy model facilities. Throughout this chapter, analogous elements of the oil and gas risk analysis are discussed.

Scope and Limitations

This analysis addresses geothermal operations for the industry as a whole (rather than for a single facility or a limited geographical area), and considers a range of values for important risk-influencing variables to assess potential health and environmental effects under a variety of conditions.

In accordance with Section 8002(m) and as a practical matter, however, EPA concluded that it was necessary to limit the scope of this study. The important limitations in scope (i.e., areas EPA has not attempted to assess) include risks from wastes not covered by the RCRA, Section 3001 (b)(2)(A) exemption (i.e., wastes already covered by RCRA regulations); risks from releases regulated and permitted under Federal statutes other than RCRA (e.g., the Clean Air Act); and risks associated with various alternative waste management practices (i.e., this study only concerns current practices).

Probably the most important limitation to this analysis is the lack of reliable data on the composition of geothermal energy industry wastes. In many cases, therefore, EPA analyzed the risks at geothermal sites based on the constituents and concentrations estimated for oil and gas wastes. Waste streams generated by exploration activities for the geothermal industry are very similar to those generated by exploration for the oil and gas industry (drilling wastes). Both industries dispose of the majority of liquid production wastes through subsurface injection.

CHARACTERIZATION OF MAJOR RISK-INFLUENCING FACTORS

The potential health and environmental risks associated with waste management activities depend on the types and quantities of wastes being generated; the storage, treatment, and disposal technologies being used; and the environmental settings in which the waste management activities are conducted. These factors determine the degree to which receptors (human or environmental) may be exposed to harmful constituents of the waste through various exposure pathways. The following sections characterize the major waste streams, waste management practices, and environmental variables that influence risks at geothermal facilities.

Waste Streams

The characterization of waste streams generated from geothermal energy industry activities was based solely on a literature review.

General data gathering methods are discussed in Chapter I. As stated previously, this review provided no comprehensive or fully reliable data.

EPA focused characterization efforts on the two large-volume waste types associated with the two major geothermal energy industry operations included in this study: drilling (i.e., exploration and development) and production. As shown in Figure VI-1, these two waste types are drilling pit wastes (drilling mud and well cuttings) and production waste fluids. Most data available in the literature concern these wastes. Although other types of wastes are generated by geothermal energy activities, EPA had inadequate data on their chemical characteristics, sources and volumes, and management practices to assess the risks.

To perform the qualitative risk assessment for geothermal energy industry wastes, EPA compared model geothermal energy facilities to oil and gas models with similar waste type, waste management, and environmental setting characteristics. Consequently, in characterizing geothermal energy industry wastes, EPA emphasized constituents chosen for modeling risk in the oil and gas analysis. According to the limited geothermal waste characterization data available, the constituents analyzed in the oil and gas study also appear to present the greatest potential for risk from geothermal wastes.

Produced Fluid Wastes

For purposes of this risk assessment, EPA divided geothermally-produced fluid waste streams into two main categories: power plant fluids and direct user fluids. The power plant category was further divided into three subcategories based on the processes used to convert geothermal energy into electric power: the conventional steam cycle, the binary process, and the flash process. EPA differentiated between the

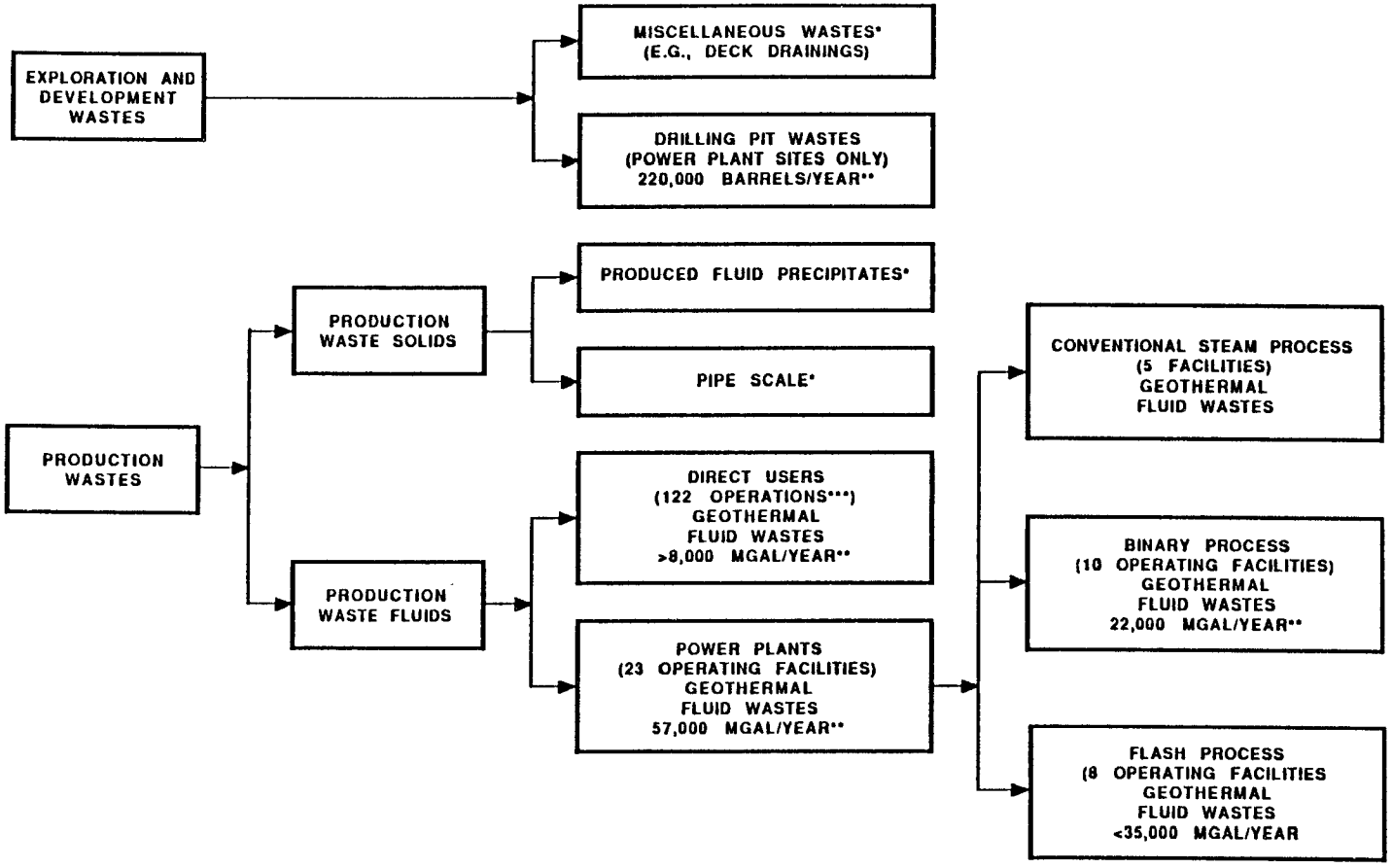

Figure VI-1 Exempt Wastes Generated from Geothermal Energy Industry Activities

* Wastes not included in the analysis.

** Total quantity from all facilities and sites.

*** While the actual number of direct user operations is unknown, 122 were identified in the literature. Produced waste fluid quantities were determined for only 112 of these 122 operations.

wastes from these processes because of differences in waste characteristics. These subcategories are discussed below.

Production Fluid Wastes--Conventional Steam Cycle

As discussed in Chapter II, two basic types of geothermal (hydrothermal) fluids exist: fluids from vapor-dominated hydrothermal systems and fluids from liquid-dominated hydrothermal systems. Fluid from vapor-dominated hydrothermal systems can be used directly to drive the power turbine in a conventional steam cycle process. In this process, the waste is generated downstream of the turbine when exhaust steam is condensed in direct contact condensers or surface condensers located beneath the turbine. It should be noted that The Geysers (the only vapor-dominated reservoir under commercial development in the United States) accounted for more than 89 percent of the capacity of U.S. electric power generation from geothermal energy in 1986.

EPA has determined that production fluid wastes generated downstream of the turbine in vapor-dominated systems are currently exempt wastes under RCRA. However, this report does not explicitly address the risks associated with these wastes because of inadequate data on their volumes, constituent concentrations, and management practices. In general, steam extracted from the ground in vapor-dominated systems is relatively pure because most of the dissolved minerals are left behind in the formation. Constituent concentrations in the condensed liquids, therefore, are probably comparable to (or possibly less than) the concentrations in produced fluid wastes from the binary and flash processes discussed below. Also, produced fluid wastes from vapor-dominated systems are generally injected underground in a manner similar to that practiced for binary and flash process fluids. For these reasons, the risks associated with production fluid wastes from vapor-dominated systems are probably within the range of those discussed for the binary and flash processes.

Production Fluid Wastes--Binary Process

In the binary process, hot geothermal fluids heat and vaporize a hydrocarbon heating medium. The hydrocarbon vapor then drives the power turbine. The fluid wastes produced are exempt wastes and are generated upstream of the turbine.

In Table III-4, produced fluid analyses were presented for five binary process power plants. Two model waste streams, shown in Table VI-1, were developed from these analyses. Several constituents in Table III-4 have been combined into a mobile salt constituent in these model waste streams. The first model waste stream contains the median concentration of each constituent in the five analyses and may be considered a "best estimate." The second stream may be considered a conservative waste stream because it is composed of the highest concentration of each constituent in the produced fluid analyses. The constituent concentrations for the oil and gas model waste streams, which were used as references in performing the qualitative risk assessment, are shown for comparison in Table VI-1.

As shown in Table VI-1, data are available for only four of the six constituents modeled in the oil and gas risk analysis. The geothermal fluid analyses include neither benzene nor arsenic. Benzene in oil and gas waste streams probably results from hydrocarbon contamination, oil-based drilling fluids, or diesel fuel additives in mud systems; its presence would not be expected in fluids from normally pressured geothermal reservoirs. Although evidence exists that arsenic is likely to be present in these waste streams as a trace constituent, concentrations are not provided in these "major-constituent-only" analyses. Trace analyses performed on samples from several test wells (i.e., exploration wells) and provided in Tables III-6 and III-7 show the presence of arsenic in concentrations ranging from 0.25 to 25 mg/L (Acurex 1980; Morris, et al. 1981).

Table VI-1 Model Production Fluid Waste Stream Analyses

Waste stream constituent	Model oil and gas waste stream concentrations (mg/L)		Model geothermal power plant waste stream concentrations (mg/L)			Geothermal direct user operation waste stream concentrations (mg/L)[c]	
	Median	Upper 90th %	Binary process best estimate[a]	Binary process conservative[a]	Flash process[b]	Range	Median
Arsenic	0 0	1 7	NA[d]	NA	NA	NA	NA
Benzene	0 5	2 9	NA	NA	NA	NA	NA
Boron	9 9	120 0	5 0	49	210	0.0 - 277	0.6
Chloride	7,300	35,000	865	9,000	93,650	0.0 - 11,000	58
Sodium	9,400	67,000	653	4,720	36,340	4.0 - 7,000	195
Mobile Salts[e]	23,000	110,000	1,694	14,842	153,198	8.6 - 20,568	474

[a]Based on produced fluid analyses of samples from five binary process power plants

[b]Based on the produced fluid sample analysis from a flash process power plant

[c]Based on produced fluid sample analyses from 43 direct user operations in 13 States identified in the literature.

[d]NA = Not available In the case of arsenic, however, trace analyses of samples from several test wells suggest that arsenic is present in produced geothermal fluids

[e]Mobile Salts = Na + Cl + K + Mg + Ca + SO_4

As described in Chapter III, produced fluid waste volumes were calculated for all ten operating binary process power plants. The total volume generated from these plants is approximately 22,000 Mgal/yr (million gallons per year). For individual facilities, produced fluid waste generation rates range from 240 to 7,700 Mgal/yr, with a median rate of 1,200 Mgal/yr.

Production Fluid Wastes--Flash Process

In the flash process, steam is produced by subjecting fluids produced from a liquid-dominated reservoir to a sudden pressure reduction. The steam generated directly drives a power turbine. The loss of some water to steam concentrates the dissolved solids in the remaining geothermal fluid. This remaining fluid is an exempt waste.

Only one waste stream analysis of fluid waste is available. This waste is generated upstream of the power turbine; its analysis is presented in Table VI-1. In the absence of additional data, EPA used these data to analyze risk associated with fluids produced from flash process power plants. Although arsenic levels are not reported in this "major-constituent-only" analysis, test well analyses indicate that arsenic is likely to be present in these wastes. The levels of arsenic may be higher in the waste stream than are shown in the test well analyses, because flashing concentrates the dissolved solids in the fluid.

For all eight operating facilities in the United States that generate power by the flash process, EPA estimated that approximately 35,000 Mgal of produced fluid wastes are generated annually. The waste generation rate at individual flash process facilities ranges from 59 to 12,000 Mgal/yr, with a median rate of 3,000 Mgal/yr.

Direct User Fluid Wastes

As described in Chapter II, geothermal fluids are also used as a direct source of heat. Based on chemical analysis data, the produced fluid wastes from direct user applications generally contain lower levels of chemical constituents than do fluids from power plants. Table VI-1 shows the range of concentrations and the median concentration of each major constituent found in analyses of produced fluids from 43 direct user operations in 13 States.

EPA identified a total of 122 direct user operations in the literature; the actual number of sites is unknown. Produced fluid generation rates were given for only 112 of the operations cited. These 112 facilities generate approximately 8,000 Mgal/yr of produced fluid wastes. The quantity of fluid waste generated at a given site ranges from 3.7 to 4,200 Mgal/yr; the median quantity is approximately 110 Mgal/yr.

Drilling Pit Solid Wastes

As discussed in Chapters II and III, drilling pit wastes consist primarily of used drilling muds and well cuttings. The drilling pit solid waste analyses from eight sites are presented in Table VI-2, with the corresponding constituent concentrations for the model oil and gas waste streams provided for comparison. From the data available, two model waste streams were characterized. The first waste stream is a "best estimate" composed of the median concentration of each constituent in the eight analyses; the second is a "conservative" model waste stream characterized by the maximum concentration of each constituent. Although arsenic concentrations are not given in the geothermal analyses in Table VI-2, extract analyses presented in Tables III-11 and III-12 for the same sites (see Chapter III) show the presence of arsenic in some

geothermal drilling pit wastes. EPA elected not to use extract analyses because they do not present explicit concentrations for many trace elements. Instead, concentrations are reported as being less than the detection limit of the analytical technique used.

In 1985, the geothermal energy industry generated 220,000 barrels of drilling pit wastes from the 68 wells drilled (Williams 1986). The mean quantity of waste generated per drilling pit is 3,200 barrels, based on one pit for each well. This mean quantity was used to characterize the model geothermal drilling pit waste stream.

Waste Management Practices

Waste management practices for the geothermal energy industry were characterized based on data compiled from a review of the literature and, in a few cases, data collected during site visits. With the limited data available, EPA attempted to define the factors that can affect risk, including:

- Principal treatment and disposal technologies;
- Basic design and operating information; and
- Unit size and waste throughput.

When data were not available on the basic design, operating parameters, and/or unit size/waste throughput, EPA characterized waste management practices with the values used for similar practices in the oil and gas risk analysis. In the following sections, waste management practices are described for each waste type analyzed.

Table VI-2 Drilling Pit Solid Wastes . Bulk Composition

Waste stream constituent	Model oil and gas waste wtream concentrations Pit solids - Direct (mg/kg) Median	Upper 90th %	Geothermal energy drilling sites (mg/kg)[a] A	B	C	D	E	F	G	H	Best estimate	Conservative
Arsenic	0	0 01	NA[b]	NA	NA	NA	NA	NA	NA	NA	NA	NA
Cadmium	2	5 4	NA	NA	NA	NA	NA	NA	NA	NA	NA	NA
Sodium	8,500	59,000	7,700	4,000	20,000	12,500	2,400	900	1,100	1,900	3,200	20,000
Chloride	17,000	88,000	9,800	1,000	53,000	20,000	1,000	100	100	400	1,000	53,000
Fluoride	[c]	[c]	240	340	290	420	230	180	240	150	235	420
Chromium VI	22	190	NA	NA	NA	NA	NA	NA	NA	NA	NA	NA
Mobile Salts[d]	100,000	250,000	32,600	36,700	111,600	77,000	27,800	33,200	26,300	31,600	32,900	111,600

[a]The constituent concentrations in waste streams A through H are based on analyses of drilling pit wastes at eight geothermal energy industry drilling sites. These drilling sites are associated with geothermal energy power plants The best-estimate waste stream comprises the median concentration of each constituent in waste streams A through H The conservative waste stream comprises the highest concentration of each constituent in waste streams A through H

[b]NA = Not available

[c]Fluoride was not a model constituent in the oil and gas study

[d]Mobile Salts = Na + Cl + K + Mg + Ca + SO_4

Production Fluid Wastes--Power Plants

As shown in Figure VI-2, produced fluids from geothermal energy power plants may be disposed of by a variety of methods. The methods currently practiced include:

- Direct release to surface waters;
- Injection (or treatment and injection) into underground strata; and
- Consumptive secondary use.

Several other methods described in the literature and discussed in Chapter III are not being employed at present.

Of the current waste management practices, injection is the most frequently used. In fact, injection is the primary geothermal fluid disposal method for 21 of the 23 operating power plants that generate exempt wastes (under Section 3001).

Because the overwhelming majority of power generation facilities dispose of produced fluid wastes by underground injection, EPA analyzed the risks associated with this waste management practice at power plants. The two key variables that influence the risk posed by injection of wastes are injection rate per well and injection pressure. Based on the limited data on injection rates and numbers of wells available for a few sites, EPA estimated the injection rate per well for a flash process facility and for a binary power plant. These estimates assume that all injection wells normally operate continuously. If some injection wells are non-operating spares, the estimated rates will be less than the actual rates. The estimated injection rates per well for binary process plants and flash process plants are 950 Mgal/yr and 610 Mgal/yr, respectively.

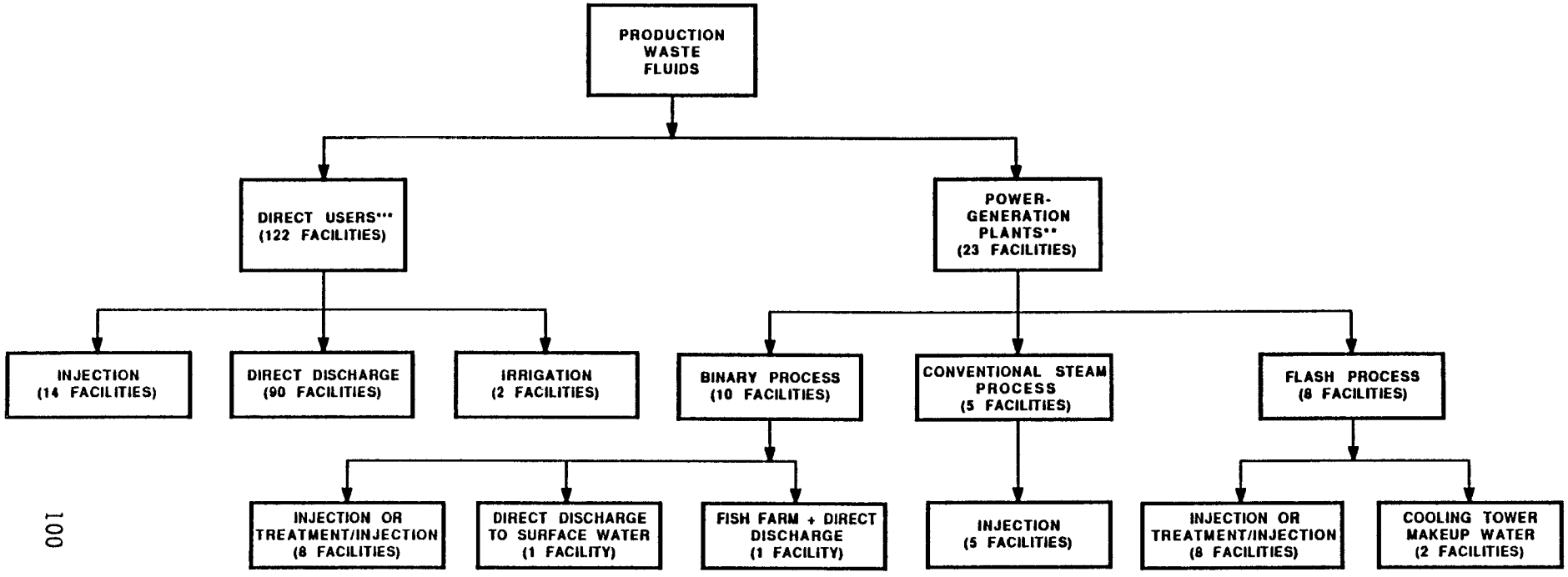

Figure VI-2 Waste Management Practices* for Produced Geothermal Fluid Wastes

* More than one type of waste management practice may be used at a facility.

** Only practices at facilities generating exempt waste are shown.

*** The literature identified 122 direct user operations; the actual number is unknown. Waste management practices were determined for only 106 of these operations.

The other key variable that influences risk is injection pressure. The injection pressure was varied from 400 to 2,000 psi for the modeled oil and gas scenarios that best represent the conditions at geothermal sites. EPA evaluated the potential risk posed by the reinjection of geothermal wastes for this range of injection pressures for all power plant model facilities, because no data were available in the literature on their field injection pressures.

Production Fluid Wastes--Direct Users

Based on a sample of 106 direct user operations in 12 States, the primary disposal method for produced fluid wastes from these operations is direct discharge to surface water. More than 85 percent of the direct users in this sample (90 operations) dispose of their fluid wastes in this manner. The vast majority, if not all, of these operations are covered under NPDES permits.

After direct discharge to surface water, the most frequently employed geothermal fluid waste management practice for direct users is injection. Approximately 13 percent of the direct users in the sample (14 operations) dispose of their wastes by injection. In addition, the produced fluid "wastes" from two other operations are used for irrigation.

The 14 operations that inject produced fluid wastes make up the largest segment of the direct user operations covered under the scope of this study. Therefore, EPA chose injection to evaluate the potential risks from direct user operations. For direct users injecting geothermal fluid wastes, the annual waste generation rate per facility ranges from 9 to 500 Mgal/year; the median rate is 55 Mgal/year. These fluid rates

could be handled by one injection well at each site. Assuming one injection well at each site, the median rate (i.e., 55 Mgal/year) was used to evaluate the potential risk from direct user injection. The injection pressure was assumed to vary between 400 and 2,000 psi for the same reasons noted for power plants.

Drilling Pit Wastes

In reviewing the literature, EPA identified four methods for handling drilling pit wastes:

- Dewatering and onsite burial;
- Removal for offsite disposal;
- Landfarming; and
- Solidification of pit wastes.

As stated in Chapter IV, however, EPA found only two references in the literature addressing the handling and disposal of geothermal drilling wastes at field sites. At one site, drilling pit wastes were discharged to a reserve pit and then removed for offsite disposal (USDOE 1980). At another site, drilling pit wastes were tested, then removed for offsite disposal if they were determined to be hazardous. On the other hand, if the test showed the wastes to be nonhazardous, the pit was dewatered by allowing the liquids to evaporate, and then backfilled (i.e., onsite burial) (Royce 1985). Both sites were located in California and the practices used reflect California regulatory policies. There is also evidence that some operators collect drilling wastes in tanks rather than in drilling pits (Morton 1987).

Data on the waste management practices for geothermal drilling wastes were not available to determine the one most frequently employed.

Consequently, EPA elected to characterize model geothermal sites by the same disposal methods as are used to characterize the oil and gas sites. These methods are onsite burial of dewatered drilling pit wastes in unlined and synthetically lined pits. Based on the limited waste management practice information available, geothermal drilling pit wastes appear to be handled, for the most part, more stringently than those in the oil and gas scenarios modeled. Therefore, characterizing model geothermal industry drilling sites by onsite burial may be a conservative assumption (i.e., one that could lead to overestimates of risks).

The two risk-influencing variables modeled for onsite reserve pits in the oil and gas analysis were pit size and the presence or absence of synthetic liners. The average volume of geothermal drilling waste per pit is 3,200 barrels, which falls between the medium-sized (5,900 barrels) and small-sized (1,650 barrels) oil and gas drilling pits modeled. Risks were evaluated for both the unlined and synthetic-lined pits modeled.

Environmental Settings

To obtain data on the environmental settings at geothermal energy facilities, EPA analyzed the environmental conditions at 20 geothermal field sites. The sites selected comprise most commercial power plants, plus a few large direct users.

Based on previous risk analyses, EPA identified the following environmental variables as having significant potential for influencing risks resulting from waste releases to ground and surface water:

- Hydrogeologic variables: ground-water velocity, aquifer configuration, recharge rate, depth to ground water, and unsaturated zone permeability;
- Surface water variables: distance to surface water and surface water flow rate; and

- Exposure point characteristics: downgradient distance to the nearest exposure well and downstream distance to the nearest surface water intake.

The distributions of values for each variable within the 20 sites analyzed were used to develop two environmental settings for this risk analysis: a best-estimate setting, representing the most common setting found at the 20 sites, and a conservative (but not necessarily worst-case) setting. These environmental settings are presented in Table VI-3. Single ground-water velocities were not designated for the conservative setting because, based on previous analyses, a slow velocity yields higher risk estimates for some waste constituents, while a fast velocity yields higher risk estimates for other constituents. No attempt was made to differentiate between the environmental settings for drilling and production activities, because drilling and production are either currently taking place, or can occur, at many of the same sites.

QUALITATIVE RISK ASSESSMENT RESULTS

This section provides a qualitative assessment of the risks associated with the underground injection of produced fluids and the disposal of drilling wastes in onsite reserve pits. As discussed in the preceding section, these are the most common waste streams and waste management practices of interest to this study; however, they are not the only ones that could pose human health or environmental risks. Risks associated with other geothermal waste streams and waste management practices may be analyzed in future studies.

This assessment is mostly based on the oil and gas risk modeling conducted in conjunction with the overall Section 8002(m) study, and is therefore subject to the same limitations. Furthermore, little reliable data are available on the occurrence and quantity of toxic constituents in geothermal wastes.

Table VI-3 Environmental Settings at Geothermal Energy Facilities

Environmental variable	Values for variables: Best estimate	Values for variables: Conservative
Ground-Water Velocity	100 m/yr	1 m/yr 100 m/yr 1,000 m/yr[a]
Aquifer Configuration	Unconfined	Unconfined
Recharge Rate	1 in/yr	20 in/yr
Depth to Ground water	20 m	5 m
Unsaturated Zone Permeability	10^{-2} cm/sec	10^{-2} cm/sec
Distance to Nearest Downgradient Drinking Water Well	> 2,000 m	200 m
Distance to Surface Water	> 2,000 m	60 m
Average Surface Water Flow Rate	0	40 cfs
Distance to Nearest Downstream Surface Water Intake	10 km[b]	1 km[b]

[a] A range of velocities was examined to analyze the range of risks caused by different chemical constituents in the conservative setting For some constituents, a slow velocity is conservative (i.e , yields higher risk results), while for other constituents, a fast velocity is conservative

[b] Because of lack of data, these assumed values were chosen to reflect a reasonable range of distances.

Underground Injection--Produced Fluids

There are at least four release pathways whereby underground injection of produced fluids can lead to contamination of near-surface aquifers: (1) release through failure of the well casing; (2) release through failure of grout seals separating injection zones from near-surface aquifers; (3) upward contaminant migration through abandoned wells; and (4) upward contaminant migration through fractures or faults. Because of technical constraints and data limitations, only the first two pathways were modeled in the oil and gas study (Volume 1, Chapter V); thus, they are the only two considered here. The Agency recognizes, however, that the remaining pathways may also be important sources of contamination.

Power Plants

At most of the existing geothermal power plants (roughly 70 percent), an injection well failure that releases produced fluids into near-surface aquifers would not be expected to pose significant human health risks. This assumption can be made because existing power plants are estimated to have few drinking water wells within 2,000 meters in a downgradient direction, making it unlikely that an individual would ingest ground water contaminated by such a release.

The potential for exposure is much greater, however, at the few facilities estimated to have private drinking water wells within 2,000 meters downgradient. For the oil and gas scenarios best representing the conditions assumed to exist at these facilities, it was estimated that injection well failures, if they occur, could result in cancer risks (caused by exposure to arsenic) ranging from zero to approximately 4×10^{-5}. These risk estimates would apply to geothermal power plants, if the geothermal produced fluids have the same arsenic

concentrations as are estimated for oil and gas industry produced fluids (0.02 to 2 mg/L). As discussed in the section characterizing geothermal waste streams, available data indicate that arsenic is present in at least some geothermal produced fluids, although the exact concentrations are not known. In addition, it is possible that the cancer risks from injection well failures at power plants could exceed 10^{-4}, because geothermal power plants generally inject produced fluids underground at much higher rates and in greater volumes than the oil and gas scenarios modeled. They thus have the potential to release larger masses of contaminants.

Injection well failures at a few power plants could also result in sodium concentrations in downgradient drinking water wells that are high enough to cause hypertension in sensitive individuals. Sodium concentrations were not estimated to be at levels of concern for any of the oil and gas scenarios that best represent releases of produced fluids from the binary process; however, the higher injection rates and volumes at geothermal power plants could result in higher concentrations of sodium at exposure points. Produced fluids from the flash process have significantly higher sodium concentrations than do fluids from the binary process, and therefore pose a greater risk for hypertension. Results for several relevant oil and gas scenarios indicate that releases of produced fluids from the flash process could result in sodium exposures that could cause hypertension in persons using drinking water wells located 200 meters or more downgradient.

The relatively high concentrations of chloride, boron, and mobile salts (including sodium, chloride, potassium, magnesium, and other ions) in geothermal produced fluids from power plants, and the relatively high rate at which these fluids are injected, create the potential for injection well failures (if they occur) to damage ground-water resources. For example, it appears that the concentrations of chloride

in produced fluids could cause corrosion in pipes, and that the concentrations of boron and mobile salts could injure sensitive crops. It is presently uncertain, however, how far these contaminants could migrate in ground water before dilution would cause the concentration to drop below levels of concern. Results from the oil and gas modeling study suggest that releases of produced fluids from the binary process could, in some cases, result in harmful concentrations up to 60 meters away, while releases of produced fluids from the flash process could result in harmful concentrations at an even greater distance.

Direct Users

Many direct users use downhole heat exchangers to extract heat from geothermal fluids without pumping them to the surface. In these cases, the need for fluid disposal is eliminated and the potential for adverse health or environmental impacts is very small.

At direct user facilities that use surface heat exchange systems, geothermal fluids are brought to the surface and subsequently disposed of, principally by injection underground. In general, the potential for these fluids to cause adverse health and environmental effects is considered small because contact with people or biota is unlikely. Although the magnitude of the impacts is expected to be smaller, an injection well failure at direct user operations could cause health and environmental impacts similar in nature to releases from power plants. The principal health threats probably would be the potential for cancer and hypertension caused by ingestion of ground water contaminated with arsenic and sodium, respectively. Concentrations of chloride, boron, and mobile salts could also render ground water in the vicinity of releases unsuitable for certain uses. Available data on the composition of produced fluid disposed of by direct users are presently insufficient to estimate the potential for adverse effects. In general, the risks

associated with produced fluid releases by direct users would be expected to be less than those at power plants because the volumetric flow is much lower in direct use operations and the water used is often of high quality (the water source is generally the same aquifer used as a drinking water source).

Onsite Reserve Pits--Drilling Wastes

As noted previously, it appears that most (roughly 70 percent) geothermal power plants do not have private drinking water wells within 2,000 meters. Therefore, seepage of reserve pit contaminants into surface aquifers at most plant sites would not be expected to pose significant health risks, because it is unlikely that anybody would ingest the contaminated water.

Even at those plants where drinking water wells are expected to be within range to be affected, seepage of reserve pit contaminants is expected to cause only minimal, if any, cancer risks. If leachates from geothermal reserve pits contain the conservative arsenic concentration estimated for leachates from oil and gas reserve pits (0.002 mg/L), results from the oil and gas modeling study indicate that cancer risk caused by the leachate should be zero in most cases, and probably never more than 10^{-7}. Reserve pit seepage appears to present a greater potential for noncarcinogenic risk. For a few of the oil and gas scenarios that reasonably represent conditions that also exist at geothermal power plants, sodium concentrations in downgradient drinking water wells were predicted to exceed a threshold that could cause hypertension in sensitive individuals.

The oil and gas modeling results indicate that reserve pits at geothermal power plants should not cause significant ground-water resource damage. Concentrations of drilling waste contaminants in ground

water were predicted to be below levels of concern 60 meters away from most oil and gas reserve pits. Because concentrations of the main constituents of concern (chloride, boron, and mobile salts) appear, based on limited data, to be lower in geothermal reserve pits than in oil and gas reserve pits, ground-water contamination resulting from geothermal reserve pits would probably be even less.

CONCLUSIONS

Only limited data are currently available on the major risk-influencing factors associated with geothermal energy wastes. In particular, EPA has little to no reliable data on the composition of geothermal energy waste streams. As a result, strong conclusions about the risk associated with these wastes cannot be drawn at this time. Large-volume geothermal waste streams of interest to this study (drilling waste and produced water) are basically similar in nature to those in the oil and gas industry. Also, these wastes generated by the two industries are managed and disposed of in generally similar ways. The following conclusions are provided, therefore, based on comparisons with the oil and gas risk analysis, and accounting, to the extent possible, for differences in waste stream composition and volumes, waste management practices, and environmental settings expected at geothermal sites.

- Of the 20 or so U.S. geothermal power plants, it was estimated that 13 currently have no drinking water wells within 2,000 meters downgradient. As a result, even if produced fluid or drilling waste contaminants were released to near-surface aquifers at the majority of power plants, the potential for adverse health effects is small, because it is unlikely that an individual would ingest ground water contaminated by such a release.

- If geothermal produced fluids have a similar arsenic concentration to that estimated for oil and gas produced fluids, releases from failed injection wells at geothermal power plants could cause cancer risk levels greater than 10^{-5} in a few cases (it is emphasized, however, that arsenic concentrations in geothermal produced fluids are unknown). Risk levels of concern

would be expected primarily at sites having nearby drinking water wells (e.g., within approximately 200 meters) and relatively high ground-water velocities (e.g., 100 to 1,000 meters/year).

- If an injection well failure released geothermal produced fluids into a near-surface aquifer, the resulting sodium concentrations in downgradient drinking water wells could exceed levels that may cause hypertension in sensitive individuals. This noncancer risk is greatest for releases of produced fluids from flash process power plants, which appear to have much higher sodium concentrations than geothermal produced fluids from plants using the binary process. Greater noncancer risks would be expected at sites having nearby drinking water wells (e.g., within approximately 200 meters) and relatively slow ground-water velocities (e.g., 1 to 10 meters/year).

- Adverse health and environmental impacts from injection well failures (if they occur) at direct user sites could be similar in nature to those expected from injection well failures at power plants; however, the magnitude of these impacts at direct user sites would likely be much smaller because water quality is generally better in direct use operations and because injection well failures at direct user sites would be expected to release smaller quantities of contaminants than would releases from power plants. Although releases from direct users would probably occur closer to drinking water wells, drinking water wells in the vicinity of direct use operations often tap the same aquifer; therefore, waters having similar qualities are used for domestic use and direct use applications.

- If injection well failure occurred at geothermal power plants or direct user sites, released produced fluids could sufficiently contaminate surrounding ground water to render it unsuitable for certain uses. In particular, resulting chloride concentrations could result in objectionable taste (making it unsuitable for drinking), and resulting concentrations of mobile salts could be harmful to sensitive crops (making it unsuitable for irrigation). In most cases, concentrations of concern are not expected to be exceeded 60 meters downgradient, although there could be instances in which potentially harmful concentrations exist farther away.

- Based on the limited information available on the composition of wastes from geothermal well drilling, seepage of drilling waste contaminants from geothermal reserve pits would be expected to cause only minor (if any) cancer risk, noncancer risk, and ground-water resource damage.

REFERENCES

Acurex. 1980. Identification of solid wastes in geothermal operations. Final draft report to the EPA Technical Project Monitor. Cincinnati, Ohio.

Morris, W.F., and Stephens, F.B. 1981. Characterization of geothermal solid waste. U.S. Department of Energy.

Morton, R.E. 1987. Salton Sea and The Geysers geothermal area trip report to Bob Hall. U.S. Environmental Protection Agency, Office of Solid Waste.

Royce, B.A. 1985. Impact of environmental regulations on the safe disposal of geothermal wastes. Upton, New York: Department of Applied Science, Brookhaven National Laboratory.

USDOE. 1980. U.S. Department of Energy. Environmental assessment, geothermal energy, Heber Geothermal Binary-Cycle Demonstration Project, Imperial County, California.

USEPA. 1987. U.S. Environmental Protection Agency, Office of Solid Waste. Onshore oil and gas and geothermal energy exploration, development, and production: Human health and environmental risk assessment. Washington, D.C.: U.S. Environmental Protection Agency.

Williams, T. 1986. Department of Energy comments on the technical report Waste from exploration, development and production of crude oil, natural gas and geothermal energy: An interim report on methodology for data collection and analysis.

CHAPTER VII

CURRENT REGULATORY PROGRAMS

FEDERAL REGULATIONS

Regulatory Agencies

The Geothermal Steam Act of 1970, as amended (U.S.C. 1001-1025), authorizes the U.S. Department of the Interior to issue leases for the development and use of geothermal resources. The implementing regulations (43 CFR, Part 3200) are now administered almost exclusively by the Bureau of Land Management (BLM). The BLM may issue leases on Federal lands under its jurisdiction and on lands administered by the U.S. Forest Service, with the consent of the latter. In addition, the BLM evaluates and classifies geothermal resources on Federal land and supervises all pre- and post-leasing operations, including exploration, development, and production.

Geothermal Resources Operational Orders

Geothermal Resources Operational (GRO) Orders are formal, enforceable orders, originally issued by the U.S. Geological Survey, to supplement the general regulations found in 43 CFR, Part 3200. They detail the procedures that lessees must follow in a given area or region.

GRO Order No. 1 outlines the BLM requirements for conducting exploratory operations on Federal lands. Before any exploration can begin, a Notice of Intent (NOI) to Conduct Geothermal Resources Exploratory Operations must be submitted by the lessee to the Authorized Officer.

Three categories of actions are considered exploratory operations: casual use (geological reconnaissance, sampling, or surveying) geophysical exploration, and drilling of shallow holes for measuring temperature gradients.

Upon cessation of exploratory operations, the lessee must file a Notice of Completion. The Notice of Completion must include any information on drilling difficulties or unusual circumstances that would be useful in ensuring future safe operations or protection of the environment. Three other protective measures set forth in GRO Order No. 1 regarding exploratory operations are: (1) drilling fluids and cuttings cannot be discharged onto the surface where they could contaminate lakes and streams; (2) excavated pits and sumps used in drilling must be backfilled as soon as drilling is completed and the original topography must be restored; and (3) unattended sumps must be fenced.

Geothermal Resources Order No. 2 sets forth standards for drilling, completion, and spacing of wells. All exploratory and initial development wells must be drilled according to the provisions of this Order. Lessees must submit an Application for Permit to Drill; under the terms of the Permit to Drill, the lessee must comply with requirements for casing, blowout prevention, drilling fluids, well logging, wellhead equipment, well spacing, and contingency plans.

Plugging and abandonment procedures are regulated under GRO Order No. 3. The lessee must promptly plug and abandon any well that is not in use or potentially useful. The well must be plugged and abandoned in a manner specifically approved by the Authorized Officer.

GRO Order No. 4 requires the lessee to comply with all applicable Federal and State standards with respect to the control of air, land, water, and noise pollution, including the control of erosion and the

disposal of liquid, solid, and gaseous wastes. According to Order No. 4, "Liquid well effluent or the liquid residue thereof containing substances, including heat... shall be injected into the geothermal resources zone or such other formation as is approved by BLM." The lessee must submit a Plan of Injection to the BLM for approval. The plan must include the quantity, quality, and source of the proposed injection fluid, how the fluid is to be injected, and the proposed well location and injection zone. The plan also must take into account effects on surface and subsurface waters, fish, wildlife, and natural habitat. Monthly Water Injection Reports must be filed with the BLM. Solid wastes, such as drill cuttings, precipitates, and sand, must be disposed of as directed by the BLM, either on location or at approved disposal sites.

According to GRO Order No. 4, the lessee must provide and use pits and sumps to retain all wastes generated during drilling, production, and any other operation, unless other specifications are made by the Authorized Officer.

Underground Injection Control Program

The Safe Drinking Water Act of 1974, as amended, requires EPA to establish a national program to ensure that underground injection of wastes will not endanger underground sources of drinking water. EPA implemented this mandate by enacting the Underground Injection Control (UIC) Program for Federal, Indian, State, and private lands.

EPA has primary enforcement authority and responsibility for the UIC Program for all States, except for those having their own approved UIC programs. In some cases, EPA gives primacy to the States regarding the UIC program. Under the UIC rules, EPA has jurisdiction over the five categories of injection wells. Geothermal injection wells are considered Class V under the UIC classification system; this class includes electric power industry injection wells, direct heat user injection wells, heat

pump and air conditioning return flow wells, and ground-water aquaculture return flow wells.

The Bureau of Land Management defers to EPA or the primacy State when it is necessary to determine whether underground freshwater sources are safe from the effects of these operations. However, it retains involvement in approval of wells drilled or converted for injection on Federal and Indian lands, principally in order to carry out other mandated responsibilities. The BLM permits wells for production rather than injection; in this case, the BLM is responsible for protecting subsurface water sources near the well.

SUMMARY OF STATE REQUIREMENTS

Regulatory Requirements

State rules and regulations obtained from 35 States have been examined for their applicability to geothermal energy exploration and development. Thirteen State legislatures have passed laws mandating the implementation of geothermal rules and regulations. Typically, these regulations are very comprehensive and, in general, address permitting, solid and liquid waste disposal, well design, well plugging, and restoration of surface.

Of the States surveyed that do not have specific geothermal regulations, at least nine have rules and regulations that pertain to some aspect of geothermal exploration and development. Most of these regulations are located in water quality control standards or oil and gas regulations that address some areas of geothermal development, especially drilling and injection well requirements.

The requirements of the 13 States that have specific geothermal regulations are summarized in Table VII-1. The geothermal regulations

of California, which follow, are presented in greater detail because they are considered "model regulations" for geothermal operations and because of the extensive use of geothermal resources in California.

Summary of California's Geothermal Regulations

State Regulatory Agencies

The following agencies regulate the geothermal industry in California:

- The Geothermal Section of the California Department of Conservation, Division of Oil and Gas;
- The California Energy Commission;
- The California Public Utilities Commission;
- The California Water Resources Control Board, and the nine Regional Water Quality Control Boards;
- The California Department of Health Services; and
- County government agencies.

Geothermal Regulations

The following California statutes are either applicable or specific to geothermal energy operations:

1. The California Environmental Quality Act (CEQA). The requirements of CEQA must be fulfilled before drilling and use permits can be issued. Under CEQA, government agencies must consider environmental impacts that may result from the implementation of certain geothermal projects. Since many projects require permits from different agencies, overlapping agency studies could result; to minimize duplication of agency effort and unnecessary time delays, a CEQA procedure has been established. This procedure calls for a lead agency to prepare the environmental documentation, and the remaining permitting agencies to function as responsible agencies.

TABLE VII-1 SUMMARY OF STATE GEOTHERMAL REGULATIONS

	Alaska	California	Hawaii
GEOTHERMAL STATUTES	Geothermal Regulations and Statutes of 1983 Alaska Statute 38 05 181 and Ch 87, Alaska Admin Code	See detailed summary following this table	Board of Land and Natural Resources, Ch 2, Title 13 and Ch. 183, Title 13
STATE REGULATORY AGENCIES	Dept of Natural Resources Dept of Fish and Game Alaska Oil and Gas Conservation		Board of Land and Natural Resources Dept of Health
PERMITS ARE REQUIRED FOR	Exploration Drilling Redrilling or Deepening Injection		Exploration Drilling Modification Abandonment Change of use Injection (UIC) Surface Discharge (NPDES)
LIQUID WASTE DISPOSAL REQUIREMENTS	Approval must be given for injection only for Class V wells that are allowed underground fluid disposal Direct implementation - UIC Program		High-quality, low-temperature geothermal waters may be discharged to surface waters.
SOLID WASTE DISPOSAL REQUIREMENTS	Disposal or solidification in-place of all pumpable fluids Drilling muds may be left in reserve pit (if nonhazardous) or removed to permitted waste disposal facility		Solid wastes must be removed to off-site permitted waste disposal facility.
WELL PLUGGING AND ABANDONMENT.	As specified in the regulations		All equipment must be removed and well plugged according to regulations
SURFACE RESTORATION	Not addressed in regulations reviewed		Surface must be restored to as near its previous state as possible.

Table VII-1 (continued)

	Idaho	Louisiana	Maryland
GEOTHERMAL STATUTES.	(1) The Geothermal Resources Act of 1971 (Idaho Code, Chapter 40) (2) Rules and Regulations: Drilling for Geothermal Resources (3) Rules and Regulations Governing the Issuance of Geothermal Resources Leases	Louisiana Statewide Order 29-P, Geothermal Rules and Regulations	Maryland Geothermal Resources Act, Annotated Code of Maryland, Subtitle 8A.
STATE REGULATORY AGENCIES.	Dept. of Water Resources Dept. of Lands	Dept. of Natural Resources	Dept. of Natural Resources Dept. of the Environment
PERMITS ARE REQUIRED FOR:	Exploration Production Injection Modification or Deepening	Drilling Conversion Injection	Drilling Surface Discharge Injection
LIQUID WASTE DISPOSAL REQUIREMENTS:	Idaho has primacy for its UIC program. Surface discharge allowed under specified conditions.	Liquid waste may be stored in pits. Reinjection and surface discharge are permitted. Louisiana has UIC primacy.	Surface discharge requires approval of DHMH. State discharge permit or NPDES required for leachate from pit or sump to surface or ground water. Maryland has UIC primacy.
SOLID WASTE DISPOSAL REQUIREMENTS:	Specific methods for disposal of solid wastes must be included in the lease agreement.	Not addressed in the regulations reviewed.	Drilling wastes must be removed from pits and disposed of at permitted waste disposal facility.
WELL PLUGGING AND ABANDONMENT:	As specified in the regulations.	Injection and production wells must be plugged according to regulations when operations cease.	Fill well with sand, clay, silt, and/or gravel, and seal with concrete or sodium-base bentonite clay.
SURFACE RESTORATION:	Procedures must be followed for well plugging and abandonment and surface reclamation.	Restore to as near a natural state as possible.	Restore to as near the original condition as possible.

Table VII-1 (continued)

	Nevada	New Mexico	Oregon
GEOTHERMAL STATUTES	Geothermal regulations passed August 10, 1985, can be found in Nevada revised statutes	Geothermal Resources Conservation Act of 1978	Oregon revised statutes ch. 522: (Laws and administrative rules relating to geothermal exploration and development in Oregon, Oregon revised statutes ch 537: Low Temperature Geothermal Resource Management
STATE REGULATORY AGENCIES:	Dept of Minerals Dept of Conservation and Natural Resources	Dept of Energy and Minerals, Oil Conservation Division Oil Conservation Commission	Dept of Water Resources Dept of Geology and Mineral Industries Dept of Environmental Quality Dept of Land Conservation and Development Division of State Lands The County Affected
PERMITS ARE REQUIRED FOR.	The following well types. Domestic Commercial Industrial Observational Plugging and Abandonment Injection	Exploration Production Observation or Thermal Gradient Well Injection	Drilling NPDES Water Pollution Control Reinjection Disposal
LIQUID WASTE DISPOSAL REQUIREMENTS	Unless an alternative is approved, all fluid must be reinjected Nevada is a direct implementation State for the UIC program	New Mexico has privacy for its UIC program All highly mineralized waters are reinjected according to regulations	Liquid wastes may be reinjected, or if of high enough quality, discharged to surface waters.
SOLID WASTE DISPOSAL REQUIREMENTS	Nonhazardous solid waste may be burned onsite	Not stated in regulations, but common practice is to bury drill cuttings in reserve pits	Local government is responsible for solid waste management.
WELL PLUGGING AND ABANDONMENT	As specified in the regulations	As specified in the regulations.	As specified in the regulation, and subject to State Geologist approval
SURFACE RESTORATION	Restore to as near the original condition as possible	Not addressed in the regulations reviewed	Restore to as near the original condition as possible.

Table VII-1 (continued)

	Texas	Utah	Virginia
GEOTHERMAL STATUTES	Texas Annotated Code, Chapter 16, regulates oil, gas, and geothermal activities	Geothermal Resource Conservation Act of 1981	Geothermal Energy Regulations of the Dept of Mines, Minerals, and Energy
STATE REGULATORY AGENCIES	Texas Railroad Commission	Department of Natural Resources	Dept of Mines, Minerals, and Energy
PERMITS ARE REQUIRED FOR:	Drilling Deepening Plugging Injection Waste Discharge (NPDES) Drilling Fluid Storage and Disposal	Exploration Production Abandonment Injection	Exploration Production Injection
LIQUID WASTE DISPOSAL REQUIREMENTS	Liquid wastes can be disposed of in drilling fluid disposal pits, completion pits, and saltwater disposal pits Geothermal resource fluids, mineralized waters, and brines may be injected into the reservoir of origin, nonproducing zones, or aquifers unfit for use. Texas has primacy for its UIC program	Liquid wastes are reinjected Utah has primacy for its UIC program.	Geothermal fluids must be reinjected into the formation from which they were drawn. Virginia is a direct implementation State for its UIC program.
SOLID WASTE DISPOSAL REQUIREMENTS	Drill cuttings, sand, silt, and inert waste may be landfilled onsite without a permit	All solid waste must be taken to a permitted facility	Drilling muds must be removed from the drill site and disposed of as specified in the operations plan
WELL PLUGGING AND ABANDONMENT	Must proceed according to API standards	As specified in regulations.	As specified in the regulations.
SURFACE RESTORATION	Provisions are usually part of the lease agreement	Owner/operator is required to rehabilitate land	The operations plan must present the intended plan for reclamation of land at production and injection sites. Drilling sites and pits must be reclaimed within one year after drilling ceases

Table VII-1 (continued)

	Washington
GEOTHERMAL STATUTES	Geothermal Resources Act of 1974
STATE REGULATORY AGENCIES	Department of Natural Resources Department of Ecology
PERMITS ARE REQUIRED FOR	Drilling Redrilling and Deepening Injection Wastes Discharge
LIQUID WASTE DISPOSAL REQUIREMENTS	Geothermal fluids are either reinjected or discharged to surface waters Washington has primacy for the UIC program
SOLID WASTE DISPOSAL REQUIREMENTS	Wastes must be tested for hazardous characteristics Wastes that are non-hazardous may be backfilled in a pit or landspread and incorporated into surface soils
WELL PLUGGING AND ABANDONMENT	As specified in the regulations
SURFACE RESTORATION:	Equipment and structures must be removed Surface must be restored to as near its natural condition as possible Surface grading and revegetation are required

2. California Administrative Code, Title 14, Chapter 2: Implementation of CEQA. This chapter of the Code defines the scope of the CEQA regulations, designates the lead agency, and sets guidelines for the CEQA process with regard to geothermal exploratory projects.

3. California Administrative Code, Title 14, Chapter 4, Subchapter 4: Division of Oil and Gas Statewide Regulations. This subchapter provides detailed guidelines for drilling, blowout prevention, production, injection, subsidence, and abandonment.

4. California Administrative Code, Title 23, Chapter 3, Subchapter 15. This subchapter covers discharges of wastes to land from sumps, ponds, landfills, and other waste management units.

5. California Administrative Code, Title 22, Chapter 30. This chapter establishes criteria for determining if a waste is hazardous, designated, or nonhazardous.

6. The Porter-Cologne Water Quality Control Act, California Water Code. This law covers discharges into the waters of the State from many waste sources.

7. California Public Resources Code, Chapter 4, Division 3 (Publication No. PRC02, Jan. 1985): California Laws for the Conservation of Geothermal Resources.

8. California Administrative Code, Title 20, Chapter 2, Subchapters 1, 2, and 5: California Energy Commission, Regulations Pertaining to Rules of Practice and Procedure and Power Plant Site Certification.

9. California Assembly Bill No. 2948, The Tanner Bill. This law requires local jurisdictions to prepare hazardous waste management plans describing types of waste streams, waste management practices, and treatment.

Permits

A Notice of Intention must be submitted for approval by the appropriate district office for drilling an exploration, development, injection, or temperature observation well, and for reworking, converting to injection, or abandoning an existing well. Well type determines the permitting procedure required for drilling, producing, injecting, and abandoning geothermal wells.

The California Department of Conservation, Division of Oil and Gas, issues Underground Injection Control (UIC) Permits for geothermal injection wells. California is a direct implementation State for its underground injection program.

The California Water Resources Control Board issues NPDES permits, and the nine Regional Water Quality Control Boards issue Waste Discharge Permits within their respective regions for discharges of produced waters and drilling wastes.

The local, city, or county governments issue Land Use Permits for geothermal operations and for disposal facilities.

Well Design

Extensive design specifications are required for all types of geothermal wells.

Solid and Liquid Waste Disposal

Disposal of nonhazardous solid and liquid wastes from geothermal operations falls primarily under the jurisdiction of the Department of Conservation, in the Division of Oil and Gas, and the California Regional Water Quality Control Board; hazardous geothermal wastes are regulated by the Department of Health Services.

Liquid Waste Subsurface Injection

The Division of Oil and Gas is in charge of all geothermal injection projects, whether for disposal of spent nonhazardous geothermal fluids from power production or for reservoir pressure maintenance. Geothermal injection wells are Class V under the Federal UIC Program. The Division

is mandated by law to ensure that no damage to the surface or subsurface occurs as a result of injection projects. The Division decides whether to approve or reject an application for a project based on extensive data from the operator. Operators of proposed projects must give proof to the Division that a reservoir will not suffer damage and freshwater aquifers will not be infiltrated. The Division shares the submitted data and a draft of the proposed permit conditions with the Regional Water Quality Board. The Board then determines whether or not the draft conditions, prepared by the Division, provide protection to the ground and surface waters having present or anticipated beneficial uses. Upon agreement of the conditions, the Division issues the final project permit.

Project approval cannot be given until an aquifer exemption is granted by the Federal EPA, or until it is known that the total dissolved solids content (TDS) of the injection zone is greater than 10,000 ppm. Exemptions are not required to inject into a formation with water that has a TDS content greater than 10,000 ppm, and/or is proven to be unfit as a source of drinking water. If the EPA grants the aquifer exemption and the appropriate agencies give the project a favorable review, the District Engineer will approve the application for the injection project. The Regional Water Quality Control Board is the primary reviewing agency for proposed injection wells. Injection wells must be inspected by the District Engineer every 6 months to ensure that the well is in good condition and there is no leakage. A Monthly Injection Report must be submitted by the operator to the appropriate district office, providing injection data and information on any changes or remedial work.

Surface Disposal--Water

The Porter-Cologne Water Quality Control Act prescribes waste discharge requirements as established by the Water Resources Control Board. Operators must file a report with their Regional Water Quality

Control Board on the proposed discharge, providing all information that the regional board may require. The Division of Oil and Gas receives copies of, reviews, and may reply to the draft Waste Discharge Requirements proposed by the regional board, for all proposed discharges within a geothermal field boundary. If protection of water quality and precautions against pollution and contamination appear adequate, the board will issue a Waste Discharge Permit (California's NPDES permit) to discharge wastes to the surface waters of the State. The regional boards must implement requirements at least as stringent as those of the State board; some regions have established requirements more stringent than those of the State board. Surface discharge for beneficial uses, such as agricultural uses, is allowed if water quality meets the regional board's standards. Discharge permits will specify the maximum chemical constituent values allowed for beneficial uses.

Surface Disposal--Land

Land disposal of nonhazardous drilling wastes from geothermal operations is under the jurisdiction of the Regional Water Quality Control Board and the county in which the project is being implemented. Land disposal of nonhazardous solid wastes from power production and hazardous wastes from either drilling or power production is under the jurisdiction of the Department of Health Services.

During drilling operations, all drilling wastes are contained in sumps. The counties, lead agencies for geothermal resource development, issue Use Permits for each site, which incorporate county waste disposal requirements. Waste Discharge Requirements, issued by the Regional Water Quality Control Board on a site-by-site basis, serve as the primary discharge permit.

At the end of drilling operations, State regulations require that the materials in the sump be analyzed for listed chemical constituents, using the California Department of Health Service's Waste Extraction Test. Total threshold level concentrations (TTLC) and soluble threshold level concentrations (STLC), established under California Administrative Code 23.3.15, are the bases for determining whether a waste is hazardous.

Sump contents are generally considered hazardous if any of the following chemical constituent levels are exceeded:

Constituent	mg/L of Extract
Arsenic	5.0
Boron	100.0
Cadmium	1.0
Chromium III	25.0
Chromium VI	5.0
Mercury	0.2
Nickel	20.0
Zinc	250.0.

California Administrative Code 23.3.15, Appendix III, lists other chemical constituents, the presence of which in the waste would result in hazardous classification. All hazardous waste must be disposed of in a Class I waste management unit, which has the highest containment level of any class. Sump contents that may contain any of the listed constituents but in lower concentration than the hazardous concentration, are called designated wastes. Most drilling wastes are classified as designated wastes. California Administrative Code Title 22, Division 4, Chapter 30, establishes the waste extract concentration differences between hazardous and designated waste categories. Designated wastes can be disposed of in either Class II or Class I waste management units.

Table VII-2 Summary of Waste Management Strategies
for Discharges to Land
(excluding injection to subsurface formations)

Waste category	Waste management unit		Primary containment		Siting and geologic criteria
	Class	Type			
Liquid Hazardous	I	Surface Impoundment	Double Liners	(a)	Natural features capable of containing waste and leachate as backup to primary containment.
Underwatered Solid Hazardous	I	Landfill	Double Liners		
Dry Solid Hazardous	I	Waste Pile	Double Liners	(b)	Not located in areas of unacceptable risk from geologic or environmental hazards.
Liquid Designated (including underwatered sludge)	II	Surface Impoundment	Double Liners	(a)	Natural features capable of containing waste and leachate may satisfy primary containment requirements.
Underwatered Solid Designated	II	Landfill	Single Liner		
Dry Solid Designated	II	Waste Pile	Single Liner	(b)	May be located in most areas except high-risk areas.
Nonhazardous Solid Waste (including dewatered sludge and acceptable incinerator ash)	III	Landfill	None	(a)	Consideration of factors listed in Subsection 2333(b).
				(b)	May be located in most areas except high-risk areas.

Source: California Administrative Code, Title 23, Subchapter 15.

Solid wastes containing none of the listed chemical constituents are classified as nonhazardous and may be discarded at a Class III, II, or I waste management unit. Drilling wastes that fit the designated or the nonhazardous classification are often dewatered and disposed of onsite. Table VII-2 describes the various types of waste management units used in California.

Disposal of solid wastes from power production, such as sludges and filter cakes, is regulated by the Department of Health Services. The Department requires plant operators to test production wastes periodically at licensed laboratories for the listed chemical constituents in California Administrative Code 23.3.15 (the same list as for drilling wastes). TTLC and STLC are again the criteria for hazardous waste designation; Class I, II, and III designations apply, and each class of waste must be disposed of in the corresponding class of landfill. Some production wastes in California fall into the Class I designation; for example, solid wastes from The Geysers Power Plant are generally treated as Class I wastes because of the presence and concentrations of listed trace constituents.

Well Plugging and Abandonment

Requirements for injection well abandonment are determined by the District Engineer, based on subsurface conditions and the well casing and cementing record.

Surface Restoration

Concrete cellars must be removed from the well site or filled with earth. Well locations must be graded and cleaned of equipment, trash, and other wastes, and returned to as near a natural state as possible.

Sumps must be filled with earth after removal of harmful materials, and the surface should be graded and revegetated. Unstable slope conditions created as a result of project operations must be corrected.

CHAPTER VIII

CONCLUSIONS

- There is no record of significant damages, danger, or risks to human health and the environment resulting from the exploration, development, and production of geothermal energy.
- Geothermal operations are regional by nature; however, the bulk of the activities are confined to California.
- Existing regulations appear to be effective in protecting human health and the environment.
- There is no indication that additional Federal regulations are necessary.

CHAPTER IX

RECOMMENDATIONS

EPA recommends that Subtitle C regulations not be applied to geothermal wastes. Further, at present, the Agency sees no need for additional regulations under Subtitle D.

APPENDIX A

DATA MANAGEMENT

An extensive literature search was conducted to obtain data for this study. Raw data from this literature search were loaded into a computerized data management program that automatically flagged areas where information was lacking or deficient. State and Federal agencies, universities, and selected authors were then contacted to obtain the required information. The result of these efforts produced a pool of information that provided the necessary bases for estimating geothermal waste volumes. Since waste volumes could not be extracted directly from the literature, the information in the data base was critical to calculations leading to estimation of waste volumes.

The data sources that provided input to the data base are listed below.

DATA SOURCES

Acurex. 1983. Analysis of geothermal wastes for hazardous components. Cincinnati, Ohio: U.S. Environmental Protection Agency Industrial Environmental Research Lab.

Bloomquist, R.G. 1985. Evaluation and ranking of geothermal resources for electrical generation or electrical offset in Idaho, Montana, Oregon and Washington, Vols. I-III. Portland, Oregon: Bonneville Power Administration, U.S. Department of Energy.

California Division of Oil and Gas. 1983a. Geothermal hotline Vol. 13, No. 1.

_____. 1983b. Geothermal hotline, Vol. 13, No. 2.

_____. 1984. Geothermal hotline, Vol. 14, No. 2.

_____. 1985a. Geothermal hotline, Vol. 15, No. 1.

_____. 1985b. Geothermal hotline, Vol. 15, No. 2.

_____. 1986. Geothermal hotline, Vol. 16, Nos. 1 and 2.

_____. 1987. Geohot computer printout: Total State production and injection, 1982-1986. Retrieved January 27, 1987.

Cosner, S.R., and Apps, J.A. 1978. A compilation of data on fluids from geothermal resources in the United States. U.S. Department of Energy.

DiPippo, R. 1985. Worldwide geothermal power development. EPRI Annual Geothermal Meeting in San Diego, California, June 1985.

Ellis, P., and Conver, M. 1981. Material selection guidelines for geothermal energy utilization systems. DOE/RA/27026-1.

Geological Survey Circular 790. 1978. Assessment of geothermal resources of the United States--1978. In cooperation with U.S. Department of Energy.

Geological Survey Circular 892. 1982. Assessment of geothermal resources of the United States--1982. In cooperation with U.S. Department of Energy.

Geonomic. 1978. Geothermal environmental impact assessment: subsurface environmental assessment for four geothermal systems. NTIS PB-300 851. Cincinnati, Ohio: U.S. Environmental Protection Agency, Environmental Monitoring and Support Laboratory.

Goering, S.W., et al. 1984. Direct utilization of geothermal energy for Pagosa Springs, Colorado. U.S. Department of Energy, Division of Geothermal and Hydropower Technologies.

Greene, R. (Undated). Geothermal well drilling and completion. Handbook of geothermal energy.

Harding-Lawson Associates. 1979. Geothermal impact assessment: ground water monitoring guideline for geothermal development. Las Vegas, Nevada: U.S. Environmental Protection Agency, Environmental Monitoring and Support Lab.

Hooper, G. 1987. Geothermal electric power plants operational in the United States. U.S. Department of Energy.

Kroopnick, R.W. 1978. Hydrology and geochemistry of an Hawaiian geothermal system: HGP-A. National Science Foundation/Energy Research and Development Agency.

Lawrence Berkeley Laboratory. 1986. Case studies of low to moderate temperature hydrothermal energy development. U.S. Department of Energy, Idaho Operations Office.

Lienau, L.J. 1986. Status of direct heat projects in western States. GHC Bulletin, Fall 1986, pp. 3-7.

Meridian. 1985. Directory of direct heat geothermal projects in the United States. U.S. Department of Energy, Division of Geothermal and Hydropower Technologies.

Morton, R.E. 1986. Imperial Valley and The Geysers geothermal area trip report to Bob Hall, U.S. Environmental Protection Agency, Office of Solid Waste, December 16, 1986.

O'Banion, K., and Layton, D. 1981. Direct use of hydrothermal energy: review of environmental aspects. U.S. Department of Energy Office of the Assistant Secretary for Environmental Safety and Emergency Preparedness.

Reed, M.J. (Undated). Selected low temperatures (less than 90°C) geothermal systems in the United States. Reference data for U.S. Geological Survey Circular 892. Open-file report 83-250.

Royce, B.A. 1985. Impact of environmental regulations on the safe disposal of geothermal wastes. Upton, New York: Department of Applied Science, Brookhaven National Laboratory.

Schultz, L.E. 1985. Recovering zinc-lead sulfide from a geothermal brine. U.S. Department of Interior, Bureau of Mines RI8922. Washington, D.C.: U.S. Government Printing Office.

U.S. Department of Energy. 1980a. Environmental assessment, geothermal energy, Heber geothermal binary-cycle demonstration project, Imperial County, California.

_____. 1980b. State of the art of liquid waste disposal for geothermal energy systems, DOE/EV-0083.

Varnado, S.G., et al. 1981. Geothermal energy. Geotimes, February 1986, pp. 25-27.

Varnado, S.G., and Maish, A.B. 1948. Geothermal drilling research in the United States: alternative energy sources II.

Williams, T. 1986. U.S. Department of Energy comments on the Technical Report, Wastes from exploration, development and production of crude oil, natural gas and geothermal energy: an interim report on methodology for data collection and analysis.

Zimmerman, R.E. 1984. Environmental technology for geothermal energy. Idaho Falls, Idaho: U.S. Department of Energy.

APPENDIX B

ABBREVIATION OF UNITS AND SCIENTIFIC TERMS USED IN THE FIGURES AND TABLES

BGY	Billions of gallons per year	mg/L	Milligrams per liter
g/cm^3	Grams per cubic centimeter	MW	Megawatts
kg	Kilogram	ug/L	Micrograms per liter
km	Kilometer	pCi/g	PicoCuries per gram
MGD	Millions of gallons per day	pCi/s	PicoCuries per second
Al	Aluminum	Li	Lithium
Alk	Alkalinity	Mg	Magnesium
As	Arsenic	Mn	Manganese
B	Boron	Mo	Molybdenum
Ba	Barium	Na	Sodium
$BaSO_4$	Barium sulfate	Ni	Nickel
Be	Beryllium	Pb	Lead
Ca	Calcium	Rb	Rubidium
Cd	Cadmium	S	Sulfur
Cl	Chlorine	Sb	Antimony
Cr	Chromium	Se	Selenium
Co	Cobalt	Si	Silicon
Cu	Copper	SiO_2	Silicon dioxide
CuS	Copper sulfide	Sn	Tin
F	Fluorine	SO_4	Sulfate
Fe	Iron	Sr	Strontium
H_2S	Hydrogen sulfide	Ti	Titanium
Hg	Mercury	V	Vanadium
Zn	Zinc		

TDS - Total Dissolved Solids

TSS - Total Suspended Solids

APPENDIX C

GLOSSARY

Annulus: The space between the well casing and borehole wall or between different well casing strings.

Barrel: A measure of volume. One barrel is the equivalent of 42 U.S. gallons or 0.15899 cubic meters. One cubic meter equals 6.2897 barrels.

Binary Process: A geothermal conversion process that uses a secondary working fluid with a boiling point less than that of water. In this process, heat from the geothermal brine is transferred to the working fluid by a heat exchanger; the working fluid is vaporized, then used to power the turbine generator. The brine and working fluid are in separate closed loops. The geothermal fluid is maintained in the liquid state by high pressure, and is injected into the reservoir after use.

Brine: An aqueous solution containing a higher concentration of dissolved solids than ordinary seawater (i.e., greater than 35,000 mg/L, or 3.5 percent).

Casing: Steel pipe placed in oil, gas, and geothermal wells as drilling progresses, to prevent caving in of the borehole wall. Casing also provides a means of fluid extraction if the well is productive.

Condensation: The process by which a gas is transformed to a liquid (the liquid is called the condensate) by cooling or an increase in pressure or both, simultaneously.

Condensable Gas: Gas that can be reduced to a denser form, as from steam to water.

Conductor Pipe: Surface pipe used in wells to seal off near-surface water, prevent caving in of borehole walls, and serve as a conductor of drilling mud through shallow, unconsolidated layers of sand, silt, and clay.

Cooling Tower Blowdown: The removal of liquids or solids from a cooling tower process vessel or line by the use of pressure.

Cooling Tower Drift: A fine mist of water droplets that escape from the top or sides of the tower during normal operation. Any compound normally present in the circulating water will be carried out with the drift.

Derrick: A wooden or steel structure built over a well site to support drilling equipment, and a tall mast for raising and lowering drill pipe and casing.

Direct Use Geothermal System: The use of geothermal energy as heat without converting it to another form of energy.

Drill Bit: The tool attached to the lower end of drill pipe for gouging, tearing, grinding, and cutting rock formations in drilling oil, gas, and geothermal wells. Drilling mud is pumped through the tool for cooling and circulation.

Drill Cuttings: Fragments of rocks dislodged by the action of the drill bit and brought to the surface by the circulation of drilling mud.

Drill Stem: All members in the assembly used for drilling by the rotary method from the swivel to the bit, including the kelly, drill pipe and tool joints, drill collars, stabilizers, and various subsequent items.

Drill String: The column, or string, of drill pipe with attached tool joints that transmits drilling fluid and rotational power from the kelly to the drill collars and bit.

Drilling Mud: A special mixture of clay, water, and chemical additives pumped down the wellbore during rotary drilling and workover operations. The mud brings drill cuttings to the surface, cools and lubricates the bit and drill system, protects against blowouts by controlling subsurface pressures, and deposits a coating on the borehole wall to prevent the loss of fluids to the formations penetrated.

Effluent: An outflow of treated or untreated liquid waste from an industrial facility or from a holding structure, such as a pit or pond.

Extraction Procedure: A solid waste exhibits EP toxicity (EP) if, using the test methods described in 40 CFR or equivalent methods approved by the Administrator, the extract from a representative sample contains any of the contaminants listed in 40 CFR 261.24, Table I, at a concentration equal to or greater than the value given for that waste in the table. If the waste contains less than 0.5 percent filterable solids, the waste, after filtering, is considered to be the extract.

If a solid waste exhibits EP toxicity but is not listed as a hazardous waste in 40 CFR, Subpart D, an EPA hazardous waste number that corresponds to the toxic contaminant causing it to be hazardous will be assigned.

Filter Cake: The compacted solid or semisolid material separated from a liquid and remaining on a filter after pressure filtration; the plastic-like coating of solids from the drilling fluid that adhere to and build upon the borehole walls and are left behind.

Flash Process: Partial evaporation of hot condensed liquid by a stepwise reduction in system pressure; vaporization of volatile liquids by either heat or vacuum.

Flocculation: Aggregation or coalescence of fine particles to form a settled, filterable mass.

Fly Ash: Fine solid particulate, essentially on combustible refuse. Fly ash is carried by draft out of a bed of solid fuel and deposited in isolated spots within a furnace or flue, or carried out through a chimney.

Forced Air System: A space heating system where hot air is blown from a heat source, then distributed by ducts to outlets.

Freon: A trade name used for any of various nonflammable gaseous and liquid fluorinated hydrocarbons used as refrigerants and as aerosol propellants.

Fumarole: A hole or vent from which fumes or vapors are emitted; a spring or geyser that emits steam or gaseous vapor; usually found in volcanic areas.

Geophysical Survey: The exploration of an area in which geophysical properties and relationships unique to the area are mapped by one or more geophysical methods may include: electrical resistivity, infrared, and magnetotelluric surveys, as well as heat flow and seismic monitoring.

Geopressured Geothermal System: Hot, high-pressure brines containing dissolved natural gases. A potential hybrid energy resource of mechanical, geothermal, and chemical energy.

Geothermal Gradient: The change of the earth's temperature with increasing depth, expressed in degrees per unit depth, or in units of depth per degree. The average gradient is approximately 1°C/30 m (2°F/100 ft).

Geyser: A type of hot spring from which columns of hot water and steam gush into the air at more or less regular intervals.

Hot Dry Rock: Nonmolten, essentially nonporous, impermeable, hot rocks with above normal geothermal gradients. Water injected into manmade fractures is expected to return steam and/or hot water through a second well for economic recovery of geothermal energy.

Hot Spring: A spring with a temperature above that of the human body (98°F).

Hydrocyclone: A device that separates granular solids from a stream of water. The stream takes a circular path in a conical vortex where centrifugal forces act to separate the stream into a coarse fraction, which is discharged at the apex, and a fine fraction, which is removed by the vortex finder.

Hydrogen Sulfide (H_2S): A flammable, toxic, colorless gas with an offensive odor, commonly produced from "sour" gas wells and some geothermal wells, and emitted from volcanic vents.

Hydronic System: A space heating system that uses hot water directly in radiant panels, convectors, or radiators, either singly or in combination with one another.

Igneous Rock: Rock solidified from hot, mobile material called magma. Examples are granite, andesite, and basalt.

Kelly: The heavy square or hexagonal steel pipe suspended from the swivel through the rotary table, and connected to the topmost joint of drill pipe to turn the drill stem and ultimately the drill bit, as the rotary table turns. It has a bored passageway that permits fluid to be circulated into the drill stem and up the annulus, or vice versa.

Kelly Bushing: A special device that, when fitted into the master bushing, transmits torque to the kelly and simultaneously permits vertical movement of the kelly to make a hole. It may be shaped to fit the rotary opening or have pins for transmitting torque, and is rotated by power from the drawworks and drilling engines.

Kiln: A large furnace for baking, drying, or burning firebrick or refractories, or for calcining ores or other substances.

Lava: The fluid rock that issues from a volcano or a fissure in the earth's surface; such rock when solidified upon cooling.

Leachate: A liquid that percolates through soil, sand, or other media, usually migrating from a pit or landfill.

Liquid-Dominated Geothermal System: A subsurface reservoir of hot water or a mixture of liquid and vapor.

Magma: A naturally occurring mobile rock material generated within the earth and capable of intrusion and extrusion. Igneous rocks are thought to have been derived from magma through solidification.

Mud Pot: Type of hot spring consisting of a shallow pit or cavity, containing hot, generally boiling mud, carrying very little water and a large amount of fine-grained mineral matter. Commonly associated with geysers and other hot springs in volcanic areas. These features vary in size (some attain 30 feet in diameter) and depth to mud level (some attain 15 feet).

Mud Volcano: A cone-shaped mound of mud, built around a spring, brought to the surface by slowly escaping natural gas of volcanic, petroliferous, or other origin. These features may attain a height of 250 feet.

Nitrogen Drilling: A drilling technique using nitrogen as the drilling fluid. It is used in drilling vapor-dominated geothermal systems to avoid damaging the production zone with hydrostatic columns of mud or water. Nitrogen is preferred to air, because the oxygen in air can promote corrosion.

Permeability: The capacity of a porous rock, sediment, or soil to transmit fluid; a measure of the rate at which, under unequal pressures, a fluid of standard viscosity can move a given distance over a given time interval.

pH: The negative logarithm of the hydrogen ion activity; the degree of acidity or basicity of an aqueous solution. At 25°C, 7 is the neutral value; acidity increases with the decreasing value below 7 and basicity increases with increasing value above 7.

Polymerization: The joining together of two or more molecules to form a single, heavier molecule.

Precipitation (Chemical): The chemical process of bringing dissolved and suspended particles out of solution; producing a separable solid phase in a liquid medium.

Producing Horizon: The subsurface zone or stratum that will produce fluid (aqueous, petroleum, or geothermal) when penetrated by a well.

Quad: Unit of heat energy, equal to one thousand trillion British Thermal Units.

Remote Sensing: The gathering and recording of information about some property of an object or area by a recording device that is not in actual physical contact with the object or area being studied.

Reserve Pit: An excavation connected to the working mudpits of a drilling well in which excess muds and other drilling fluids are stored; a standby pit containing already-mixed drilling mud for use in an emergency when extra mud is needed; or an excavated earthen-walled pit used for wastes.

Rotary Drilling: A drilling method in which a hole is drilled by a rotating bit to which a downward force is applied. The bit is fastened to the drill stem, and rotated by power transmitted to the rotary table on the derrick floor.

Rotary Table: The geared rotating table to which power is transmitted, which turns the kelly, drill stem, and bit assembly.

Salinity: A measure of the quantity of total dissolved solids in water, usually expressed by weight in parts per thousand or parts per million (ppm).

Sand Trap: A device for separating heavy, coarse particles from the cuttings-laden fluid overflowing a drill collar; a trap separating sand and other particles from flowing water and generally including a means of ejecting them.

Scale: A hard encrustation on the surface of downhole, wellhead, and surface equipment formed by precipitation of dissolved and suspended solids.

Scrubbing: The process of using extracting liquids to separate soluble gases.

Sedimentary Rock: Rock formed by the accumulation of sediments in water or from air. Layered structure is characteristic. Examples are shale, sandstone, and limestone.

Shale Shaker: A series of vibrating trays with sieves that remove rock cuttings from the circulating drilling fluid in a rotary drilling operation.

Sludge: A residue from air, wastewater, or other residues from pollution control.

Sulfur Dioxide: A toxic, irritating, colorless gas or liquid compound formed by the oxidation of sulfur. It dissolves in water to form sulfurous acid.

Supercritical: Property of a gas that is above its critical pressure and temperature, and which makes it impossible to liquify, regardless of the amount of pressure applied.

Surface Runoff: Water that travels over the soil surface to the nearest surface stream; the runoff of a drainage basin that has not passed beneath the surface since precipitation.

Swivel Head: An assembly at the top of the kelly that allows free rotation of the kelly while not transferring rotation to the mud hose and hoist cables.

Total Dissolved Solids (TDS): The total content of suspended and dissolved solids in a solution.

Vapor-Dominated Geothermal System: A subsurface reservoir containing predominantly high-temperature steam and gases.

Viscosity: The resistance of liquids, semisolids, and gases to movement or flow.

Volcano: A vent in the earth's crust through which molten rock (lava), rock fragments, gases, and ashes, are ejected from the earth's interior. A mountain formed by the materials ejected.

APPENDIX D

REPORT BIBLIOGRAPHY

Acurex. 1980. Identification of solid wastes in geothermal operations. Final draft report to the EPA Technical Project Monitor. Cincinnati, Ohio.

Acurex. 1983. Analysis of geothermal wastes for hazardous components. Cincinnati, Ohio: Industrial Environmental Research Lab.

Armistead, C.H. 1983. Geothermal energy: its past, present and future contribution to the energy needs of man. 2d ed. London: E&FN Span.

Bufe, C.G. 1982. Geothermal energy. Geotimes, February 1982, p. 37-39.

California Division of Gas and Oil 1983. Geothermal hotline Vol. 13, No. 1.

_____. 1984. Geothermal hotline Vol. 14, No. 1.

_____. 1985a. Geothermal hotline Vol. 15, No. 1.

_____. 1985b. Geothermal hotline Vol. 15, No. 2.

_____. 1986. Geothermal hotline Vol. 16, Nos. 1 and 2.

_____. 1987. Geohot computer printout: total state production and injection, 1982-1986. Retrieved January 17, 1987.

Chilinger, G.V., et al. 1982. The handbook of geothermal energy. Houston: Gulf Publishing Co.

DiPippo, R. 1986. Geothermal power plants: Worldwide status.

_____. 1986. Geothermal Resources Council Bulletin, 15(11):9-18.

_____. 1985. Worldwide geothermal power development. EPRI Annual Geothermal Meeting. San Diego, California.

Fairchild, D.M. 1985. National conference on disposal of drilling wastes, D.M. Fairchild, ed. Norman: University of Oklahoma.

Fairchild, D.M., and Knox, R. 1985. A case study of off-site disposal pits in McCloud, Oklahoma. National Conference on Disposal of Drilling Wastes, D.M. Fairchild, ed. pp. 47-67. Norman: University of Oklahoma.

Geonomic. 1978. Geothermal environmental impact assessment: subsurface environmental assessment for four geothermal systems. NTIS PB-300 851. Cincinnati, Ohio: U.S. Environmental Protection Agency, Environmental Monitoring and Support Lab.

Goering, S.W., et al. 1984. Direct utilization of geothermal energy for Pagosa Springs, Colorado. U.S. Department of Energy, Division of Geothermal and Hydropower Technologies.

Hansen, P.N., and Jones, F.V. (undated). Mud disposal, an industry perspective (received from IMCO Services by RCRA docket, December 15, 1986).

Hochstein, H.P. 1982. Introduction to geothermal prospecting. Auckland, New Zealand: Geothermal Institute, University of Auckland.

Lienau, L.J. 1986. Status of direct heat projects in western states." GMC bulletin, Fall 1986, pp. 3-7.

McDonald, W.J., et al. 1978. Improved geothermal drilling fluids. Geothermal Resources Council Transaction, Vol. 2.

Morris, W.F., and Stephens, F.B. 1981. Characterization of geothermal solid wastes. U.S. Department of Energy.

Morton, R.E. 1986. Imperial Valley and The Geysers: geothermal area trip report to Bob Hall, U.S. Environmental Protection Agency, Office of Solid Waste.

Morton, R.E. 1987. Salton Sea and The Geysers geothermal area trip report to Bob Hall. U.S. Environmental Protection Agency, Office of Solid Waste.

O'Banion, K., and Layton, D. 1981. Direct use of hydrothermal energy: review of environmental aspects. U.S. Department of Energy, Office of the Assistant Secretary for Environmental Safety and Emergency Preparedness.

Rafferty, J. 1985. Recommended practices for the reduction of drill site wastes. National Conference on Disposal of Drilling Wastes, B.M. Fairchild, ed. pp. 35-46. Norman: University of Oklahoma.

Reed, M.J. 1981. Geothermal energy. Geotimes, February 1981, pp . 35-36.

_____. (Unpublished). Selected low-temperature (less than 90°C) geothermal systems in the United States. Reference data for U.S. Geological Survey Circular 892, open-file report 83-250.

Robinson, J. 1987. Unocal docket No. F-86-OGRN-FFFFF.

Royce, B.A. 1985. Impact of environmental regulations on the safe disposal of geothermal wastes. Upton, New York: Department of Applied Science, Brookhaven National Laboratory.

Tucker, B. 1985. Soil applications of drilling wastes. National Conference on Waste Disposal of Drilling Wastes, B.M. Fairchild, ed. pp. 102-112. Norman: University of Oklahoma.

U.S. Department of Energy. 1980a. Environmental data - Energy technology characterization. Washington, D.C.: U.S. Department of Energy Report DOE/EV-0077.

_____. 1980b. Environmental assessment, geothermal energy, Heber Geothermal Binary-Cycle Demonstration Project, Imperial County, California.

USEPA. 1987. U.S. Environmental Protection Agency, Office of Solid Waste. Onshore oil and gas and geothermal energy exploration, development, and production: Human health and environmental risk assessment. Washington, D.C.: U.S. Environmental Protection Agency.

U.S. Geological Survey Circular 790. 1978. Assessment of geothermal resources of the United States. In cooperation with the U.S. Department of Energy. Washington, D.C.: U.S. Government Printing Office.

Varnado, S.G., et al. 1981. Geothermal drilling and completion technology development program plan.

Wallace, R.H., Jr. 1986. Geothermal energy. Geotimes 31(2):25-27.

Wallace, R.H., Jr., and Schwartz, K.L. 1987. Geothermal energy. Geotimes 32(2):28-29.

Williams, T. 1986. Department of Energy comments on the technical report "Wastes from exploration, development and production of crude oil, natural gas and geothermal energy: An interim report on methodology for data collection and analysis."

Zimmerman, R.E. 1984. Environmental technology for geothermal energy. Idaho Falls, Idaho: U.S. Department of Energy.