US EPA ARCHIVE DOCUMENT

LG&E KU

PPL companies

John N. Voyles
Vice President, Transmission
and Generation Services

LG&E and KU Energy LLC
220 West Main Street
P.O. Box 32010
Louisville, KY 40232
T 502-627-4762
F 502-627-4165
john.voyles@lge-ku.com

VIA CERTIFIED MAIL/RETURN RECEIPT REQUESTED

July 27, 2011

Mr. Stephen Hoffman
US Environmental Protection Agency
Two Potomac Yard
2733 S. Crystal Drive
5th Floor, N-237
Arlington, VA 22202-2733

RE: Plan for Addressing Recommendations in Site Assessment Report
Kentucky Utilities Company
Green River Station CCR Impoundments

Dear Mr. Hoffman:

This is a response on behalf of Kentucky Utilities Company (KU) to EPA's June 27, 2011 letter requesting KU to inform you of our plans to address the recommendations in EPA's site assessment report for the Green River Station CCR Impoundments. Specifically, this response covers how KU intends to address the recommendations made by EPA's engineering contractor, AMEC, as a result of a site assessment conducted at the Green River facility on August 16, 2010. The attached (Table 1) restates AMEC's recommendations (in italics) and KU's specific plans and schedules for implementing each of the recommendations.

In conducting their assessment, AMEC utilized guidelines issued by the Mine Safety and Health Administration (MSHA). However, the MSHA guidelines are aimed at coal slurry ponds found at mine sites rather than the CCR impoundments found at a power plant. The MSHA guidelines are not legally applicable to our impoundments and differ substantially from the regulations that are applicable to our facilities. As you know, over the past two years EPA has assessed impoundments at several other facilities owned by KU or its affiliates. None of the EPA contractors conducting the assessments of our facilities used MSHA guidelines. In fact, of the dozens of assessments of power plant impoundments that EPA has conducted across the nation, we are unaware of any EPA contractor, other than AMEC, using MSHA guidelines. Consequently, we object to the use of MSHA guidelines

for the assessments of our facilities because they are inappropriate from a technical standpoint, legally inapplicable and inconsistent with past EPA practice. In the present situation where EPA is conducting nation-wide assessments to determine whether CCR impoundments pose any significant risk to the public, it is particularly inappropriate for EPA to apply differing standards depending on the EPA contractor that conducts the assessment.

KU will continue to comply with applicable regulations and take necessary actions to ensure the structural integrity of our CCR impoundments. KU has conducted additional evaluations and implemented improvements to the impoundments and has included written documentation for these actions with this letter. We believe these evaluations and additional improvements clearly show the impoundments are in satisfactory condition and in compliance with all applicable Kentucky dam safety regulations.

Please contact the following individuals if you have any questions regarding this response.

Primary: David Millay at (502) 627-2468 or David.Millay@lge-ku.com
Secondary: Michael Winkler at (502) 627-2338 or Michael.Winkler@lge-ku.com

Sincerely,

Attachments (3):

Table 1 - KU Response to EPA Contractor Recommendations for Green River Station Impoundments

KU Green River Station Ponds: Hydrologic and Hydraulic Assessment, July 2011, LG&E and KU Services Company

Addendum B, Report of Geotechnical Exploration and Slope Stability Analyses KU Green River Power Station, No. 2 Pond/Coal Runoff Pond and Scrubber Pond, July 2011, MACTEC Engineering and Consulting, Inc.

Cc: David Millay, LG&E and KU Services
Michael Winkler, LG&E and KU Services
Gary Wells, Kentucky Division of Water

Table 1– KU Response to EPA Contractor Recommendations for Green River Station CCR Impoundments

	Impoundment	EPA Contractor Recommendation	KU Plan	KU Schedule
1	Main Pond	*AMEC recommends that an appropriately conservative design storm rainfall and freeboard depth in accordance with MSHA guidelines be applied to the impoundment's watershed to assure the dam and decant system can safely store, control and discharge the design flow. Based on the large size and significant rating for Ash Treatment Basin #1, the MSHA design storm would be the PMF. Hydraulic calculations should also be completed to determine the rate necessary, or draw down elevated water surfaces following such an event.*	KU utilizes Kentucky dam safety regulations rather than MSHA guidelines to evaluate the performance of Coal Combustion Residual (CCR) impoundments. In KU's opinion, Kentucky regulations provide an appropriately conservative design storm rainfall. KU completed a comprehensive Hydrologic and Hydraulic (H&H) analysis and concluded that the Main Pond performs in accordance with Kentucky dam safety regulations. KU will continue to operate and maintain the Main Pond to meet applicable state regulations. KU has completed actions to implement this recommendation.	H&H analysis report completed in July, 2011. No further action scheduled.
2	Main Pond	*The study should consider all critical stages over the life of the pond including pond full conditions.*	Kentucky dam safety regulations do not address pond full conditions. KU completed a comprehensive Hydrologic and Hydraulic (H&H) analysis which considered all critical stages over the life of the pond including pond full conditions. The analysis concluded that the Main Pond performs satisfactorily under pond full conditions and in accordance with Kentucky dam safety regulations. KU has completed actions to implement this recommendation.	H&H analysis report completed in July, 2011. No further action scheduled.

Table 1 (continued) – KU Response to EPA Contractor Recommendations for Green River Station CCR Impoundments

	Impoundment	EPA Contractor Recommendation	KU Plan	KU Schedule
3	Main Pond	*MSHA guidelines recommend a minimum freeboard of 3 feet. Since Ash Treatment Basin #1 discharges into Ash Treatment Basin #2, MSHA's guidelines for impoundments in series should be utilized.*	KU utilizes Kentucky dam safety regulations rather than MSHA guidelines to evaluate the performance of Coal Combustion Residual (CCR) impoundments. Kentucky dam safety regulations address impoundments in series. KU completed a comprehensive Hydrologic and Hydraulic (H&H) analysis which utilized Kentucky regulations for impoundments in series and concluded that the Main Pond performs in accordance with Kentucky dam safety regulations. KU will continue to operate and maintain the Main Pond to meet applicable state regulations. According to Kentucky Division of Water (KDOW)'s Memorandum No. 5 the freeboard hydrograph "is the hydrograph used to establish the minimum elevation of the top of dam." Therefore, according to Kentucky regulations, a freeboard of 0.0 or more meets the minimum requirements. KU typically maintains an available freeboard of approximately 4.0 feet for the Main Pond. KU has completed actions to implement this recommendation.	H&H analysis report completed in July, 2011. No further action scheduled.
4	Main Pond	*AMEC recommends Kentucky Utilities evaluate the need to (1) temporarily lower the normal operating level of Ash Treatment Basin #1 until the recent slope repair and wet area below the repair have been assessed and (2) permanently increase the available freeboard to provide adequate safety based on sound engineering judgment for the operation of all the impoundments particularly in light of the "structures in series" configuration of the impoundments.*	(1) In December 2009, KU retained Associated Engineers, Inc. (AEI) to assess and monitor the damaged slope, design repairs, conduct material and construction quality testing, and assess the stability of the repaired slope. AEI concluded that the slope was repaired in accordance with design plans. In July 2010, AEI provided a report, *Final Geotechnical Report Main Ash Pond Slope Stability Analysis and Repair, Green River Station.* (2) KU completed a comprehensive Hydrologic and Hydraulic (H&H) analysis and concluded that the Main Pond performs in accordance with applicable Kentucky dam safety regulations. The typical available freeboard for the Main Pond is approximately 4 feet. KU will continue to operate and maintain the Main Pond to meet applicable state regulations. KU has completed actions to implement this recommendation.	Repairs completed in June 2010. AEI report completed in July 2010. H&H analysis report completed in July, 2011. No further action scheduled.

Table 1 (continued) – KU Response to EPA Contractor Recommendations for Green River Station CCR Impoundments

	Impoundment	EPA Contractor Recommendation	KU Plan	KU Schedule
5	Main Pond	*In the opinion of the assessing professional engineer, the criteria for minimum safety factors should be in accordance with USACE EM 1110-2-1902 with a minimum seismic safety factor of1.2 as recommended by 2007 MSHA Coal Mine Impoundment Inspection and Plan Review Handbook, page 88. Likewise, if the dam does not meet the above seismic factor of safety, then the stability of the embankment should be analyzed and the amount of embankment deformation or settlement that may occur should be evaluated to assure that sufficient section of the crest will remain intact to prevent a release from the impoundment.*	Per Associated Engineers, Inc. (AEI)'s January 2011 *Addendum A, Final Geotechnical Report Main Ash Pond Slope Stability Analysis and Repair, Green River Station: "The Main Ash Pond is under the jurisdiction of the Kentucky Department for Environmental Protection (KYDEP) which specifies a minimum seismic safety factor of 1.0 with the reservoir at the normal pool. However, the attached stability analyses confirm seismic factors exceeding 1.2."* KU has completed actions to implement this recommendation.	Final Geotechnical report and Addendum A completed January 2011. No further action scheduled.
6	Main Pond	*A July 2010 report by Associated Engineers, Inc. titled Final Geotechnical Report Main Ash Pond Slope Stability Analysis and Repair, for the Green River Station presents two stability analyses for Ash Treatment Basin #1 including a slope failure located on the downstream slope of the south embankment north of the outlet structure, and a global stability (also referred to as critical slope). Based on the results and recommendations in this report, the slope failure was repaired during May and June of 2010. This area should be regularly and closely monitored for any changes in piezometers readings or surficial movement.*	Qualified KU personnel routinely inspect the Main Pond on a weekly basis and monitor areas of concern noted from previous inspections.	Routine weekly monitoring ongoing.
7	Main Pond	*The global stability was reviewed for the maximum section at B-B. A survey should be performed at the cross-section to determine the actual configuration of the existing slope.*	KU retained AEI to conduct a survey for section B-B to determine the actual configuration of the existing slope. The survey data was used to model the global stability. KU has completed actions to implement this recommendation.	Survey completed January 2011. No further action scheduled.
8	Main Pond	*In addition, the minimum depth of slice used in the program was 10 feet. The analysis should be performed with a 5 feet minimum depth of slice to identify shallow failure surfaces.*	Per July 2010, *Final Geotechnical Report Main Ash Pond Slope Stability Analysis and Repair, Green River Station* and January 2011 *Addendum A*, AEI used at least a 5 foot minimum depth of slice for stability modeling at all locations other than the actual failed surface. A site investigation determined that the actual failed surface was greater than 10 feet; therefore a minimum depth of slice of 10 feet was used for a "back-in" analysis. KU has completed actions to implement this recommendation.	Final Geotechnical report and Addendum A completed January 2011. No further action scheduled.

Table 1 (continued) – KU Response to EPA Contractor Recommendations for Green River Station CCR Impoundments

	Impoundment	EPA Contractor Recommendation	KU Plan	KU Schedule
9	Main Pond	*The analysis should consider all critical stages over the life of the pond including pond full conditions. These conditions would need to be determined in conjunction with the hydraulic recommendations above.*	Kentucky dam safety regulations do not specify a minimum safety factor for the pond full condition. Per January 2011 *Addendum A, Final Geotechnical Report Main Ash Pond Slope Stability Analysis and Repair, Green River Station,* AEI provided analyses for *" a "worst case" condition assuming a water surface elevation of 449.5 feet and an elevated phreatic surface within the dam significantly higher than indicted from piezometer data. The lowest modeled safety factor was 1.416 which exceeds the minimum 1.4 safety factor recommended in the U.S. Army Corps of Engineers Engineering Manual (EM) 1110-2-1902."* KU completed a comprehensive Hydrologic and Hydraulic (H&H) analysis and concluded that the Main Pond "pond full" condition is elevation 447.6. KU has completed actions to implement this recommendation.	Final Geotechnical report and Addendum A completed January 2011. H&H report completed July 2011. No further action scheduled.
10	Main Pond	*The hydraulic analysis should provide a phreatic surface through the embankment.*	KU concluded that the Main Pond "pond full" condition is elevation 447.6. Because this elevation is lower than the more conservative "pond full" elevation 449.5 used by AEI for modeling the phreatic surface, additional modeling is not necessary. KU has completed actions to implement this recommendation.	H&H report completed July 2011. No further action scheduled.
11	Main Pond	*A rapid-drawdown should be performed for the A-A section in case the pond would need to be lowered in response to a problem.*	Per AEI's January 2011 *Addendum A, Final Geotechnical Report Main Ash Pond Slope Stability Analysis and Repair, Green River Station," Rapid-drawdown analysis for A-A' is attached. The resulting safety factor of 1.375 exceeds the minimum value of 1.2 required by KYDEP. For the analysis, the inboard part of the section was revised from the original to more completely delineate the ground surface and extend a greater distance away from the dam crest. As a "worst case" condition, the highest elevation of the phreatic surface was assumed to be at 449.5 and the level within the dam modeled significantly higher than indicated from piezometer data."* KU has completed actions to implement this recommendation.	Addendum A completed in January 2011. No further action scheduled.

Table 1 (continued) – KU Response to EPA Contractor Recommendations for Green River Station CCR Impoundments

	Impoundment	EPA Contractor Recommendation	KU Plan	KU Schedule
12	Main Pond	*The friction angle value used for the CCW in the analysis appears high for ash material. Typical ash friction values are 28 degrees for compacted, 24 degrees for loosely compacted, and 11 degrees for uncompacted material. Consideration should be given for lowering strength values to account for inconsistencies within the fill or foundation materials.*	Per AEI's January 2011 *Addendum A, Final Geotechnical Report Main Ash Pond Slope Stability Analysis and Repair, Green River Station, "Our research has found values for sluiced ash to range from 24 degrees to over 37 degrees with most reported between 30 and 32 degrees. In our opinion, the value of 26 degrees used for analysis is conservative and appropriate based on the conditions disclosed by our investigation."* KU agrees with AEI and believes it is unnecessary to lower strength values. KU has completed actions to implement this recommendation.	Addendum A completed in January 2011. No further action scheduled.
13	Main Pond	*Consideration should also be given to allow water levels in the piezometers to develop and stabilize.*	Per AEI's January 2011 *Addendum A, Final Geotechnical Report Main Ash Pond Slope Stability Analysis and Repair, Green River Station, "Stabilization time for piezometer levels was considered in modeling the phreatic surface. Based on piezometer data available since our report was submitted, we have revised the long term steady seepage analyses to slightly raise the phreatic surface to represent what is, in our opinion, a "worst case" condition. The resulting safety factors exceed the KYDEP long term steady seepage requirement of 1.5 and USACE seismic requirement of 1.2. As discussed above, the pond full condition has also been modeled as a "worst case" assuming a water surface elevation of 449.5 and an elevated phreatic surface within the dam significantly higher than indicated from piezometer data."* Qualified KU personnel monitor instrumentation at least twice a year and more frequently as needed.	Addendum A completed in January 2011. Routine monitoring ongoing.
14	Main Pond	*The analyses presented appear limited to a circular surface; different types of failure surfaces should be analyzed and optimized.*	Per AEI's January 2011 *Addendum A, Final Geotechnical Report Main Ash Pond Slope Stability Analysis and Repair, Green River Station, "In our opinion, circular surface failure is the accepted industry standard and appropriate for the conditions present at this site."* KU agrees with AEI and believes it is unnecessary to analyze different types of failure surfaces. KU has completed actions to implement this recommendation.	Addendum A completed in January 2011. No further action scheduled.

Table 1 (continued) – KU Response to EPA Contractor Recommendations for Green River Station CCR Impoundments

	Impoundment	EPA Contractor Recommendation	KU Plan	KU Schedule
15	Main Pond	*Twelve piezometers, of which 10 are remaining, were installed in 2010 (July and August) to support the recent stability analyses. It would be prudent for the Green River Power Station to maintain and protect these instruments, and document monitoring frequently until base line phreatic readings are apparent. After that time, a regular frequency should be maintained and the results evaluated by an engineer. Monitoring should include pond and river levels and should include additional readings and evaluation in response to elevated pond levels or specific rainfall events.*	KU plans to continue to maintain and protect piezometers on the Main Pond. Qualified KU personnel monitor instrumentation at least twice a year and more frequently as needed. KU plans to continue having instrumentation readings periodically evaluated by engineers. KU monitors rainfall, pond and river levels daily.	Instrument maintenance, monitoring, and evaluation ongoing.
16	Main Pond	*AMEC recommends additional instrumentation, especially at the crest and toe of critical slopes, be installed as budgets or development of any future problems allow.*	In July 2011, KU installed additional instrumentation at the crest and toe of critical slopes. KU has completed actions to implement this recommendation.	Additional instrumentation installed in July 2011. No further action scheduled.
17	Main Pond	*Elevated water levels in P-5 and the wet area in this same area should be continuously monitored and evaluated.*	KU is developing plans to continuously monitor and evaluate the elevated water levels in the area near P-5.	Continuous monitoring and evaluation implementation planned to be complete by Summer 2012.
18	Main Pond	*AMEC recommends that the current inspection program by the plant be expanded to include at least monthly instrumentation monitoring and pond and river levels.*	Qualified KU personnel monitor instrumentation at least twice a year and more frequently as needed. KU monitors pond and river levels daily.	Monitoring ongoing.
19	Main Pond	*In addition to the inspections by facility personnel, we recommend this type of annual inspection program and report by a Professional Engineer be continued at least yearly basis.*	KU plans to conduct inspections for the Main Pond using professional engineers on a yearly basis.	Yearly inspections scheduled.
20	Main Pond	*Due to the recent slide repair on the south dike of Ash Treatment Basin #1 and the Coal Runoff Pond, the recent surficial slide repair at the southwest corner of the Scrubber Pond and recent repair of the east dike of Ash Treatment Basin #2, AMEC recommends additional inspections be performed by Professional Engineer should any problems, such as seepage, scarps, etc., be encountered with the repairs or if new similar problems develop.*	Qualified KU personnel routinely inspect the Main Pond on a weekly basis and monitor areas of concern noted from previous inspections. If needed, KU plans additional inspections by a professional engineer should any problems develop.	Routine weekly monitoring ongoing.

Table 1 (continued) – KU Response to EPA Contractor Recommendations for Green River Station CCR Impoundments

	Impoundment	EPA Contractor Recommendation	KU Plan	KU Schedule
21	Main Pond	*AMEC recommends KU personnel perform frequent inspections of the embankments with special attention to the wet area identified at piezometer P5.*	Qualified KU personnel routinely inspect the Main Pond on a weekly basis and monitor areas of concern noted from previous inspections.	Routine weekly monitoring ongoing.
22	Number 2 Pond	*AMEC recommends that an appropriately conservative design storm rainfall and freeboard depth in accordance with MSHA guidelines be applied to the impoundment's watershed to assure that the dam and decant system can safely store, control, and discharge the design flow. Based on the small size and significant rating for Ash Treatment Basin #2, the MSHA design storm would be the ½ PMF.*	KU utilizes Kentucky dam safety regulations rather than MSHA guidelines to evaluate the performance of Coal Combustion Residual (CCR) impoundments. In KU's opinion, Kentucky regulations provide an appropriately conservative design storm rainfall. KU completed a comprehensive Hydrologic and Hydraulic (H&H) analysis and concluded that the Number 2 Pond performs in accordance with Kentucky dam safety regulations. KU will continue to operate and maintain the Number 2 Pond to meet applicable state regulations. KU has completed actions to implement this recommendation.	H&H analysis report completed in July, 2011. No further action scheduled.
23	Number 2 Pond	*Hydraulic calculations should also be completed to determine the rate at which the discharge structure and associated piping could pass the design storm, if necessary, or draw down elevated water surfaces following such an event.*	KU completed hydraulic calculations as part of a comprehensive Hydrologic and Hydraulic (H&H) analysis and concluded that the Number 2 Pond performs in accordance with Kentucky dam safety regulations. KU has completed actions to implement this recommendation.	H&H analysis report completed in July, 2011. No further action scheduled.
24	Number 2 Pond	*The study should consider all critical stages over the life of the pond including pond full conditions.*	Kentucky dam safety regulations do not address pond full conditions. KU completed a comprehensive Hydrologic and Hydraulic (H&H) analysis which considered all critical stages over the life of the pond including pond full conditions. The analysis concluded that the Number 2 Pond performs satisfactorily under pond full conditions and in accordance with Kentucky dam safety regulations. KU has completed actions to implement this recommendation.	H&H analysis report completed in July, 2011. No further action scheduled.

Table 1 (continued) – KU Response to EPA Contractor Recommendations for Green River Station CCR Impoundments

	Impoundment	EPA Contractor Recommendation	KU Plan	KU Schedule
25	Number 2 Pond	*MSHA guidelines recommend a minimum freeboard of 3 feet. In addition, Ash Treatment Basin #2 will be required to utilize MSHA "s guidelines for impoundments in series.*	KU utilizes Kentucky dam safety regulations rather than MSHA guidelines to evaluate the performance of Coal Combustion Residual (CCR) impoundments. Kentucky dam safety regulations address impoundments in series. KU completed a comprehensive Hydrologic and Hydraulic (H&H) analysis and concluded that the Number 2 Pond performs in accordance with Kentucky dam safety regulations. KU will continue to operate and maintain the Main Pond to meet applicable state regulations. KU typically maintains an available freeboard of approximately 4.5 feet for the Number 2 Pond. KU has completed actions to implement this recommendation.	H&H analysis report completed in July, 2011. No further action scheduled.
26	Number 2 Pond	*At 345 acre-feet, the impoundment far exceeds the KDOW minimum size criteria for dams. Additionally, this impoundment is located downstream of (series configuration), and receives flow from the larger Ash Treatment Basin #1. The location and series operating conditions should be taken into account by KDOW in any rating assigned to Ash Treatment Basin #2.*	A dam is defined by KRS 151 as any structure that is 25 feet in height, measured from the downstream toe to the crest of the dam, or has a maximum impounding capacity of 50 acre-feet or more at the top of the structure. The Number 2 Pond is a maximum of 17 feet high, and the impounding capacity was increased from 48 acre-feet to approximately 59 acre-feet as a result of July 2011 crest regrading work. KU is in discussions with KDOW about the status of the Number 2 Pond.	KU plans to continue discussions with the KDOW.

Table 1 (continued) – KU Response to EPA Contractor Recommendations for Green River Station CCR Impoundments

	Impoundment	EPA Contractor Recommendation	KU Plan	KU Schedule
27	Number 2 Pond	*AMEC recommends modeling, at minimum, the 100-year 24-hour design storm in the KDOW Freeboard Design Hydrograph to obtain a resulting water surface elevation. Once the resulting water surface elevation is determined from the routed Freeboard Design Hydrograph, a minimum of at least two feet should separate that design storm water surface elevation and the crest of the impoundment.*	According to Kentucky Division of Water (KDOW)'s Memorandum No. 5 the freeboard hydrograph "is the hydrograph used to establish the minimum elevation of the top of dam." Therefore a freeboard of 0.0 or more meets the minimum criteria set forth by Kentucky regulations. In addition, KU completed a comprehensive Hydrologic and Hydraulic (H&H) analysis which included modeling the 100-year 24-hour design storm and concluded that the Number 2 Pond performs in accordance with Kentucky dam safety regulations. KU typically maintains an available freeboard of approximately 4.5 feet for the Number 2 Pond. KU has completed actions to implement this recommendation.	H&H analysis report completed in July, 2011. No further action scheduled.
28	Number 2 Pond	*A hydrologic and hydraulic report should be produced for Ash Treatment Basin No. 2 that clearly identifies all factors, flows, calculations, and results, including available freeboard, for the impoundment.*	KU completed hydraulic calculations as part of a comprehensive Hydrologic and Hydraulic (H&H) analysis and concluded that the Number 2 Pond performs in accordance with Kentucky dam safety regulations. KU has completed actions to implement this recommendation.	H&H analysis report completed in July, 2011. No further action scheduled.
29	Number 2 Pond	*In the opinion of the assessing professional engineer, the criteria for minimum safety factors should be in accordance with USACE EM 1110-2-1902 with a minimum seismic safety factor of 1.2 as recommended by 2007 MSHA Coal Mine Impoundment Inspection and Plan Review Handbook, page 88. Likewise, if the dam does not meet the above seismic factor of safety, then the stability of the embankment should be analyzed and the amount of embankment deformation or settlement that may occur should be evaluated to assure that sufficient section of the crest will remain intact to prevent a release from the impoundment.*	The Number 2 Pond is under the jurisdiction of the Kentucky Department for Environmental Protection (KYDEP) which specifies a minimum seismic safety factor of 1.0 with the reservoir at the normal pool. KU retained MACTEC Engineering and Consulting, Inc. (MACTEC) to conduct a slope stability analysis for the Number 2 Pond embankments. MACTEC concluded that the analyzed embankment sections are structurally stable under steady state conditions. One slope modeled under seismic conditions does not meet the target factor of safety. MACTEC concluded that the predicted failure would have an insignificant impact on the embankment at this location and improvements are not warranted. KU has completed actions to implement this recommendation.	Stability analysis report completed in December, 2010. No further action scheduled.

Table 1 (continued) – KU Response to EPA Contractor Recommendations for Green River Station CCR Impoundments

	Impoundment	EPA Contractor Recommendation	KU Plan	KU Schedule
30	Number 2 Pond	*Section 4 is located on the east embankment of Ash Treatment Basin #2. AMEC is concerned with the configuration and soil strength parameters used in the analyses. AMEC recommends this section be reviewed for existing conditions and parameters adjusted to reflect softer conditions at the toe. The wet areas may also reflect seepage from the pond; and therefore, higher water levels would need to be utilized in the pond and embankment analyses.*	KU requested MACTEC review Section 4 on the east embankment, and MACTEC did not recommend adjustments to model parameters. Per MACTEC's July 2011 *Addendum B, Report of Geotechnical Exploration and Slope Stability Analyses KU Green River Power Station, No. 2 Pond/Coal Runoff Pond and Scrubber Pond: "Our rationale for selection of soil strength parameters was provided in Section 5.3 of our Report of Geotechnical Exploration and Slope Stability Analyses. Laboratory testing (triaxial shear tests) of the material encountered in Section 4 was conducted to identify the appropriate cohesion and phi angle values. The selected parameters used in our analysis provide, in our opinion, the appropriate level of conservatism and we do not recommend further adjustments. MACTEC does not suggest manipulating the phreatic surface in Section 4 from the calculated levels; the phreatic surface generated in the analyses under steady state conditions reflects actual conditions in the field."* KU has completed actions to implement this recommendation.	Addendum B-Stability analysis report completed in July, 2011. No further action scheduled.

Table 1 (continued) – KU Response to EPA Contractor Recommendations for Green River Station CCR Impoundments

	Impoundment	EPA Contractor Recommendation	KU Plan	KU Schedule
31	Number 2 Pond	*Consideration should also be given to the extension of the south embankment and construction of the east embankment (estimated to be performed in the early 1970s). Construction documents and construction details are very limited from this era. As evidenced by the ash encountered in the Section 2 borings, it is suspected that portions of the extension and formation of Ash Treatment Basin #2 were constructed over and possibly with the CCW material. Consequently, embankments constructed over ash would be susceptible to piping and slope failures.*	Per MACTEC's January 2011 *Addendum A, Final Geotechnical Report Main Ash Pond Slope Stability Analysis and Repair, Green River Station, Addendum A, Report of Geotechnical Exploration and Slope Stability Analyses KU Green River Power Station, No. 2 Pond/Coal Runoff Pond and Scrubber Pond: "Our borings encountered both bottom ash and fly ash beneath the embankment fill at Section 2. These materials were included in the cross section and assigned appropriate strength parameters for the slope stability evaluations. Our slope stability analyses, which were provided in our final report, indicate the minimum factors of safety computed for the loading conditions evaluated exceed the target factors of safety at Section 2. Although our borings encountered ash beneath the embankment fill, we did not observe ash to be exposed at the ground surface south of the downstream slope in the vicinity of Section 2. Our observations and boring data suggest the ash beneath the embankment at Section 2 is encapsulated or capped by cohesive soils. Further, free water does not presently exist behind this embankment. Therefore, in our opinion, the ash in its present configuration does not represent a significant potential piping condition. This situation should be reevaluated should unfavorable conditions not previously observed come to the attention of plant personnel or others, or if ash becomes exposed downstream of the embankment through erosion, excavation, or penetration (such as with borings) of the overlying cohesive soils (note: borings performed in conjunction with this exploration were backfilled with a cement bentonite grout)."* KU has completed actions to implement this recommendation.	Addendum A-Stability analysis report completed in January, 2011. No further action scheduled.

Table 1 (continued) – KU Response to EPA Contractor Recommendations for Green River Station CCR Impoundments

	Impoundment	EPA Contractor Recommendation	KU Plan	KU Schedule
32	Number 2 Pond	*The analysis should consider all critical stages over the life of the pond including pond full conditions.*	Per MACTEC's January 2011 *Addendum A, Report of Geotechnical Exploration and Slope Stability Analyses KU Green River Power Station, No. 2 Pond/Coal Runoff Pond and Scrubber Pond: "The stability of the selected cross sections at the noted Green River ponds was originally evaluated under three conditions: steady-state/maximum flood, rapid drawdown, and dynamic (seismic) loading. The results of these analyses were provided in our final report. The ash profile at each cross section was modeled based on our review of the bathymetric surveys provided to us at the time of our analyses (Associated Engineers, Inc., July 2010). At the locations of Sections 2 and 3, the No. 2 Pond survey indicated the presence of ash to near the level of the upstream embankment elevation. At the remaining stability sections, the mapped solids level reflected a partial load in the pond. Information provided recently by LG&E-KU suggests it may be possible during normal operation of the ponds that solids in the ponds reach a maximum level near the upstream embankment crest elevation. Therefore, we have performed additional stability analyses for the downstream embankment slopes for Section 1 and Sections 4 through 10 that reflect the "pond full" condition. The results of these additional analyses have been included on the attached Results of Slope Stability Analyses – Green River Power Station, No. 2 Pond/Coal Runoff Pond & Scrubber Pond table. In addition, the cross section geometry, input parameters, and stability analysis results are provided on the attached STABL6H output plots."* KU has completed actions to implement this recommendation.	Addendum A-Stability analysis report completed in January, 2011. No further action scheduled.

Table 1 (continued) – KU Response to EPA Contractor Recommendations for Green River Station CCR Impoundments

	Impoundment	EPA Contractor Recommendation	KU Plan	KU Schedule
33	Number 2 Pond	*A rapid-drawdown should be performed for upstream embankment in case the pond would need to be lowered in response to a problem, and the downstream embankment in relation to flooding of Green River.*	KU requested that MACTEC conduct a rapid-drawdown analysis on upstream sections of the Number 2 Pond embankments. Per MACTEC's December, 2010 *Report of Geotechnical Exploration and Slope Stability Analyses KU Green River Power Station, No. 2 Pond/Coal Runoff Pond and Scrubber Pond,* all analyzed sections met target safety factors established by Kentucky dam safety regulations.	Stability analysis report completed in December, 2010.
			KU requested that MACTEC conduct additional rapid drawdown analysis for the downstream sections of the Number 2 Pond. Per MACTEC's July 2011 *Addendum B, Report of Geotechnical Exploration and Slope Stability Analyses KU Green River Power Station, No. 2 Pond/Coal Runoff Pond and Scrubber Pond: "As outlined in Section 5 of our Report of Geotechnical Exploration and Slope Stability Analyses, dated December 3, 20 I 0, the target factor of safety for a rapid drawdown analysis is a minimum of 1.1 according to USACE EM 11 10-2-1902: Slope Stability, and 1.2 according to KEEC Design Criteria for Dams & Associated Structures (40 1 KAR 4:030, KAR 4:040). The lowest factors of safety, as shown in Table 2, exceed the minimum values."*	Addendum B-Stability analysis report completed in July, 2011.
			KU has reviewed the additional rapid-drawdown analysis provided by MACTEC and considers implementation of this recommendation complete.	
			KU has completed actions to implement this recommendation.	No further action scheduled.

Table 1 (continued) – KU Response to EPA Contractor Recommendations for Green River Station CCR Impoundments

	Impoundment	EPA Contractor Recommendation	KU Plan	KU Schedule
34	Number 2 Pond	*The friction angle value used for the CCW in the analysis appears high for ash material. Typical ash friction values are 28 degrees for compacted, 24 degrees for loosely compacted, and 11 degrees for uncompacted material. Consideration should be given for lowering strength values to account for inconsistencies within the fill or foundation materials.*	Per MACTEC's January 2011 *Addendum A, Final Geotechnical Report Main Ash Pond Slope Stability Analysis and Repair, Green River Station, Addendum A, Report of Geotechnical Exploration and Slope Stability Analyses KU Green River Power Station, No. 2 Pond/Coal Runoff Pond and Scrubber Pond: "MACTEC has extensive experience with CCW at LG&E-KU facilities in Kentucky and with other similar facilities in the southeastern United States. Laboratory testing (both triaxial and direct shear tests) of CCW from other facilities indicated friction angles ranging from 28 degrees to over 42 degrees. Based on the results of the sensitivity analysis, our experience, and published data, we selected friction angles of 20 degrees for fly ash and 28 degrees for bottom ash to provide, in our opinion, the appropriate level of conservatism."* KU agrees with MACTEC and believes it is unnecessary to lower strength values. KU has completed actions to implement this recommendation.	Addendum A-Stability analysis report completed in January, 2011. No further action scheduled.
35	Number 2 Pond	*Consideration should also be given to allowing some time for water levels in the piezometers to develop and stabilize.*	Per MACTEC's January 2011 *Addendum A, Final Geotechnical Report Main Ash Pond Slope Stability Analysis and Repair, Green River Station, Addendum A, Report of Geotechnical Exploration and Slope Stability Analyses KU Green River Power Station, No. 2 Pond/Coal Runoff Pond and Scrubber Pond: "Piezometers were installed in a total of six crest borings, including three at No. 2 Pond/Coal Runoff Pond (B-2C, B-3C, and B-4C) and three at Scrubber Pond (B-6C, B-8C, and B-10C), on August 13 and 14, 2010. Groundwater levels in the piezometers were initially measured on August 24, 2010, 1-1/2 weeks following installation, allowing measurement of stabilized groundwater levels. The second set of readings was taken on October 14, 2010. These readings were originally provided in our final report. Additional readings were taken in December 2010 and January 2011, subsequent to our final report. The piezometer readings to-date for this project are presented on the attached Table 2. Summary of Piezometer Readings."*	Addendum A-Stability analysis report completed in January, 2011.

Table 1 (continued) – KU Response to EPA Contractor Recommendations for Green River Station CCR Impoundments

	Impoundment	EPA Contractor Recommendation	KU Plan	KU Schedule
36	Number 2 Pond	*The analyses presented appear limited to a circular surface; different types of failure surfaces should be analyzed and optimized.*	"Per MACTEC's January 2011 *Addendum A, Final Geotechnical Report Main Ash Pond Slope Stability Analysis and Repair, Green River Station, Addendum A, Report of Geotechnical Exploration and Slope Stability Analyses KU Green River Power Station, No. 2 Pond/Coal Runoff Pond and Scrubber Pond: "A circular failure surface is the accepted industry standard and appropriate for these analyses."* KU agrees with MACTEC and believes it is unnecessary to analyze different types of failure surfaces. KU has completed actions to implement this recommendation.	Addendum A-Stability analysis report completed in January, 2011. No further action scheduled.

Table 1 (continued) – KU Response to EPA Contractor Recommendations for Green River Station CCR Impoundments

	Impoundment	EPA Contractor Recommendation	KU Plan	KU Schedule
37	Number 2 Pond	*The analysis should consider all critical stages over the life of the pond including pond full conditions. These conditions would need to be determined in conjunction with the hydrologic and hydraulic recommendations above. The hydrologic and hydraulic analysis will provide maximum water levels in the pond and a phreatic surface through the embankment.*	Per MACTEC's January 2011 *Addendum A, Final Geotechnical Report Main Ash Pond Slope Stability Analysis and Repair, Green River Station, Addendum A, Report of Geotechnical Exploration and Slope Stability Analyses KU Green River Power Station, No. 2 Pond/Coal Runoff Pond and Scrubber Pond: "The stability of the selected cross sections at the noted Green River ponds was originally evaluated under three conditions: steady-state/maximum flood, rapid drawdown, and dynamic (seismic) loading. The results of these analyses were provided in our final report. The ash profile at each cross section was modeled based on our review of the bathymetric surveys provided to us at the time of our analyses (Associated Engineers, Inc., July 2010). At the locations of Sections 2 and 3, the No. 2 Pond survey indicated the presence of ash to near the level of the upstream embankment elevation. At the remaining stability sections, the mapped solids level reflected a partial load in the pond. Information provided recently by LG&E-KU suggests it may be possible during normal operation of the ponds that solids in the ponds reach a maximum level near the upstream embankment crest elevation. Therefore, we have performed additional stability analyses for the downstream embankment slopes for Section 1 and Sections 4 through 10 that reflect the "pond full" condition. The results of these additional analyses have been included on the attached Results of Slope Stability Analyses – Green River Power Station, No. 2 Pond/Coal Runoff Pond & Scrubber Pond table. In addition, the cross section geometry, input parameters, and stability analysis results are provided on the attached STABL6H output plots."* KU completed a comprehensive Hydrologic and Hydraulic (H&H) analysis and concluded that the Number 2 Pond "pond full" condition is elevation 398.0. Because this elevation is lower than the more conservative pond full elevation 399.25 used by MACTEC for modeling the phreatic surface for the Steady State-Maximum Surcharge Pool, additional modeling is not necessary. KU has completed actions to implement this recommendation.	Addendum A-Stability analysis report completed in January, 2011. H&H analysis report completed in July, 2011 No further action scheduled.
38	Number 2 Pond	*AMEC recommends the seep identified at boring B-1.75T be monitored frequently until the time of, and, following repairs.*	Qualified KU personnel routinely inspect the Number 2 Pond on a weekly basis and monitor areas of concern noted from previous inspections.	Routine weekly monitoring ongoing.

Table 1 (continued) – KU Response to EPA Contractor Recommendations for Green River Station CCR Impoundments

	Impoundment	EPA Contractor Recommendation	KU Plan	KU Schedule
39	Number 2 Pond	*AMEC recommends Kentucky Utilities evaluate the need to revise the stability analyses for Ash Treatment Basin #2 resulting from any changes made to improve the hydraulics of the facility as described in the previous section.*	KU completed a comprehensive Hydrologic and Hydraulic (H&H) analysis and implemented the hydraulic improvement of raising the embankment crest elevation to 400.5. KU requested MACTEC to review the crest regarding work and MACTEC concluded that the changed conditions would not have a significant change in factors of safety." See attached July 2011 *Addendum B, Final Geotechnical Report Main Ash Pond Slope Stability Analysis and Repair, Green River Station.* KU has completed actions to implement this recommendation.	H&H analysis report completed in July, 2011 Addendum B-Stability analysis report completed in July, 2011. No further action scheduled.
40	Number 2 Pond	*Twelve piezometers, of which 10 are remaining, were installed in 2010 (July and August) to support the recent stability analyses. It would be prudent for the Green River Power Station to maintain and protect these instruments, and document monitoring frequently until base line phreatic readings are apparent. After that time, a regular frequency should be maintained and the results evaluated by an engineer. Monitoring should include pond and river levels and should include additional readings and evaluation in response to elevated pond levels or specific rainfall events.*	KU plans to continue to maintain and protect piezometers on the Number 2 Pond. Qualified KU personnel monitor instrumentation at least twice a year and more frequently as needed. KU plans to continue having documentation periodically evaluated by engineers. KU monitors rainfall, pond and river levels daily.	Instrument maintenance, monitoring, and evaluation ongoing.
41	Number 2 Pond	*AMEC recommends additional instrumentation, especially at the crest and toe of critical slopes, be installed as budgets or development of any future problems allow.*	In July 2011, KU installed additional instrumentation at the crest and toe of critical slopes. KU has completed actions to implement this recommendation.	Additional instrumentation installed in July 2011. No further action scheduled.
42	Number 2 Pond	*AMEC recommends that the current inspection program by the plant be expanded to include at least monthly instrumentation monitoring and pond and river levels.*	Qualified KU personnel monitor instrumentation at least twice a year and more frequently as needed. KU monitors pond and river levels daily.	Monitoring ongoing.

Table 1 (continued) – KU Response to EPA Contractor Recommendations for Green River Station CCR Impoundments

	Impoundment	EPA Contractor Recommendation	KU Plan	KU Schedule
43	Number 2 Pond	*AMEC has reviewed the 2009 inspection reports and determined Kentucky Utilities has adequate annual inspections by a Profession Engineer. We recommend this type of annual inspection program and report by a Professional Engineer be continued at least yearly, in addition to the inspections by facility personnel.*	KU plans to conduct inspections for the Number 2 Pond using professional engineers on a yearly basis.	Yearly inspections scheduled.
44	Number 2 Pond	*Due to the recent slide repair on the south dike of Ash Treatment Basin #1 and the Coal Runoff Pond, the recent surficial slide repair at the southwest corner of the Scrubber Pond and recent repair of the east dike of Ash Treatment Basin #2, AMEC recommends additional inspections be performed by Professional Engineer should any problems, such as seepage, scarps, etc., be encountered with the repairs or if new similar problems develop.*	Qualified KU personnel routinely inspect the Number 2 Pond and monitor areas of concern noted from previous inspections. If needed, KU plans additional inspections by a professional engineer should any problems develop.	Routine monitoring ongoing.
45	Number 2 Pond	*AMEC recommends KU perform frequent inspections of the south embankment with special attention to the seep area identified at B-1.75T.*	Qualified KU personnel routinely inspect the Number 2 Pond on a weekly basis and monitor areas of concern noted from previous inspections.	Routine weekly monitoring ongoing.
46	Scrubber Pond	*AMEC recommends that an appropriately conservative design storm rainfall and freeboard depth in accordance with MSHA guidelines be Applied to the impoundment's watershed to assure that the dam and decant system can safely store, control, and discharge the design flow. Based on the small size and significant rating for the Scrubber Pond, the MSHA design storm would be the ½ PMF. Hydraulic calculations should also be completed to determine the rate at which the discharge structure and associated piping could pass the design storm, if necessary, or draw down elevated water surfaces following such an event.*	KU utilizes Kentucky dam safety regulations rather than MSHA guidelines to evaluate the performance of Coal Combustion Residual (CCR) impoundments. In KU's opinion, Kentucky regulations provide an appropriately conservative design storm rainfall. KU completed a comprehensive Hydrologic and Hydraulic (H&H) analysis and concluded that the Scrubber Pond performs in accordance with Kentucky dam safety regulations. KU will continue to operate and maintain the Scrubber Pond to meet applicable state regulations. KU has completed actions to implement this recommendation.	H&H analysis report completed in July, 2011. No further action scheduled.

Table 1 (continued) – KU Response to EPA Contractor Recommendations for Green River Station CCR Impoundments

	Impoundment	EPA Contractor Recommendation	KU Plan	KU Schedule
47	Scrubber Pond	*The study should consider all critical stages over the life of the pond including pond full conditions.*	Kentucky dam safety regulations do not address pond full conditions. KU completed a comprehensive Hydrologic and Hydraulic (H&H) analysis which considered all critical stages over the life of the pond including pond full conditions. The analysis concluded that the Scrubber Pond performs satisfactorily under pond full conditions and in accordance with Kentucky dam safety regulations. KU has completed actions to implement this recommendation.	H&H analysis report completed in July, 2011. No further action scheduled.
48	Scrubber Pond	*MSHA guidelines recommend a minimum freeboard of 3 feet.*	KU utilizes Kentucky dam safety regulations rather than MSHA guidelines to evaluate the performance of Coal Combustion Residual (CCR) impoundments. KU completed a comprehensive Hydrologic and Hydraulic (H&H) analysis which utilized Kentucky regulations for minimum freeboard and concluded that the Scrubber Pond performs in accordance with Kentucky dam safety regulations. KU will continue to operate and maintain the Scrubber Pond to meet applicable regulations. According to KDOW's Memorandum No. 5 the freeboard hydrograph "is the hydrograph used to establish the minimum elevation of the top of dam." Therefore a freeboard of 0.0 or more meets the minimum criteria set forth by Kentucky regulations. KU typically maintains an available freeboard of approximately 6 feet. KU has completed actions to implement this recommendation.	H&H analysis report completed in July, 2011. No further action scheduled.
49	Scrubber Pond	*In the opinion of the assessing professional engineer, the criteria for minimum safety factors should be in accordance with USACE EM 1110-2-1902 with a minimum seismic safety factor of 1.2 as recommended by 2007 MSHA Coal Mine Impoundment Inspection and Plan Review Handbook, page 88. Likewise, if the dam does not meet the above seismic factor of safety, then the stability of the embankment should be analyzed and the amount of embankment deformation or settlement that may occur should be evaluated to assure that sufficient section of the crest will remain intact to prevent a release from the impoundment.*	The Scrubber Pond is under the jurisdiction of the Kentucky Department for Environmental Protection (KYDEP) which specifies a minimum seismic safety factor of 1.0 with the reservoir at the normal pool. KU retained MACTEC Engineering and Consulting, Inc. (MACTEC) to conduct a slope stability analysis for the Scrubber Pond embankments. MACTEC's slope stability analyses confirm seismic factors exceeding 1.2. KU has completed actions to implement this recommendation.	MACTEC slope stability analysis report completed in December, 2010. No further action scheduled.

Table 1 (continued) – KU Response to EPA Contractor Recommendations for Green River Station CCR Impoundments

	Impoundment	EPA Contractor Recommendation	KU Plan	KU Schedule
50	Scrubber Pond	*Recommendations mentioned in the previous sections such as the configuration of the slope and adjustment of soil strength parameters and a detailed discussion of the methods and parameters should be included in the final report.*	KU retained MACTEC Engineering and Consulting, Inc. (MACTEC) to conduct a slope stability analysis for the Scrubber Pond embankments. MACTEC completed a report that includes a detailed discussion of the methods and parameters used for the slope stability analysis. KU has completed actions to implement this recommendation.	MACTEC slope stability analysis report completed in December, 2010. No further action scheduled.

Table 1 (continued) – KU Response to EPA Contractor Recommendations for Green River Station CCR Impoundments

	Impoundment	EPA Contractor Recommendation	KU Plan	KU Schedule
51	Scrubber Pond	*The analysis should consider all critical stages over the life of the pond including pond full conditions. These conditions would need to be determined in conjunction with the hydraulic recommendations above. The hydraulic analysis should provide a phreatic surface through the embankment.*	Per MACTEC's January 2011 *Addendum A, Report of Geotechnical Exploration and Slope Stability Analyses KU Green River Power Station, No. 2 Pond/Coal Runoff Pond and Scrubber Pond: "The stability of the selected cross sections at the noted Green River ponds was originally evaluated under three conditions: steady-state/maximum flood, rapid drawdown, and dynamic (seismic) loading. The results of these analyses were provided in our final report. The ash profile at each cross section was modeled based on our review of the bathymetric surveys provided to us at the time of our analyses (Associated Engineers, Inc., July 2010). At the locations of Sections 2 and 3, the No. 2 Pond survey indicated the presence of ash to near the level of the upstream embankment elevation. At the remaining stability sections, the mapped solids level reflected a partial load in the pond. Information provided recently by LG&E-KU suggests it may be possible during normal operation of the ponds that solids in the ponds reach a maximum level near the upstream embankment crest elevation. Therefore, we have performed additional stability analyses for the downstream embankment slopes for Section 1 and Sections 4 through 10 that reflect the "pond full" condition. The results of these additional analyses have been included on the attached Results of Slope Stability Analyses – Green River Power Station, No. 2 Pond/Coal Runoff Pond & Scrubber Pond table. In addition, the cross section geometry, input parameters, and stability analysis results are provided on the attached STABL6H output plots."* Sections 6, 7, 8, 9, and 10 are through the Scrubber Pond. KU completed a comprehensive Hydrologic and Hydraulic (H&H) analysis and concluded that the Scrubber Pond "pond full" condition is elevation 402.5. Because this elevation is lower than the more conservative assumed water elevation of approximately 405 used by MACTEC for modeling the phreatic surface for the Steady State-Maximum Surcharge Pool, additional modeling is not necessary. KU has completed actions to implement this recommendation.	Addendum A-Stability analysis report completed in January, 2011. H&H analysis report completed in July, 2011. No further action scheduled.

Table 1 (continued) – KU Response to EPA Contractor Recommendations for Green River Station CCR Impoundments

	Impoundment	EPA Contractor Recommendation	KU Plan	KU Schedule
52	Scrubber Pond	*A rapid-drawdown should be performed for upstream embankment in case the pond would need to be lowered in response to a problem, and the downstream embankment in relation to flooding of Green River.*	KU requested that MACTEC conduct a rapid-drawdown analysis on upstream sections of the Scrubber Pond embankments. Per MACTEC's December, 2010 *Report of Geotechnical Exploration and Slope Stability Analyses KU Green River Power Station, No. 2 Pond/Coal Runoff Pond and Scrubber Pond,* all analyzed sections met target safety factors established by Kentucky dam safety regulations. KU requested that MACTEC conduct additional rapid drawdown analysis for the downstream sections of the Scrubber Pond. KU expects the results of this analysis to show all sections meet the minimum target safety factors established by Kentucky dam safety regulations.	MACTEC slope stability analysis report completed in December, 2010. Analysis planned to be completed in 2011.
53	Scrubber Pond	*The friction angle value used for the CCW in the analysis appears high for ash material. Typical ash friction values are 28 degrees for compacted, 24 degrees for loosely compacted, and 11 degrees for uncompacted material. Consideration should be given for lowering strength values to account for inconsistencies within the fill or foundation materials.*	Per MACTEC's January 2011 *Addendum A, Final Geotechnical Report Main Ash Pond Slope Stability Analysis and Repair, Green River Station, Addendum A, Report of Geotechnical Exploration and Slope Stability Analyses KU Green River Power Station, No. 2 Pond/Coal Runoff Pond and Scrubber Pond: "MACTEC has extensive experience with CCW at LG&E-KU facilities in Kentucky and with other similar facilities in the southeastern United States. Laboratory testing (both triaxial and direct shear tests) of CCW from other facilities indicated friction angles ranging from 28 degrees to over 42 degrees. Based on the results of the sensitivity analysis, our experience, and published data, we selected friction angles of 20 degrees for fly ash and 28 degrees for bottom ash to provide, in our opinion, the appropriate level of conservatism."* KU agrees with MACTEC and believes it is unnecessary to lower strength values. KU has completed actions to implement this recommendation.	Addendum A-Stability analysis report completed in January, 2011. No further action scheduled.

Table 1 (continued) – KU Response to EPA Contractor Recommendations for Green River Station CCR Impoundments

	Impoundment	EPA Contractor Recommendation	KU Plan	KU Schedule
54	Scrubber Pond	*Consideration should also be given to allowing some time for water levels in the piezometers to develop and stabilize.*	Per MACTEC's January 2011 *Addendum A, Final Geotechnical Report Main Ash Pond Slope Stability Analysis and Repair, Green River Station, Addendum A, Report of Geotechnical Exploration and Slope Stability Analyses KU Green River Power Station, No. 2 Pond/Coal Runoff Pond and Scrubber Pond: "Piezometers were installed in a total of six crest borings, including three at No. 2 Pond/Coal Runoff Pond (B-2C, B-3C, and B-4C) and three at Scrubber Pond (B-6C, B-8C, and B-10C), on August 13 and 14, 2010. Groundwater levels in the piezometers were initially measured on August 24, 2010, 1-1/2 weeks following installation, allowing measurement of stabilized groundwater levels. The second set of readings was taken on October 14, 2010. These readings were originally provided in our final report. Additional readings were taken in December 2010 and January 2011, subsequent to our final report. The piezometer readings to-date for this project are presented on the attached Table 2. Summary of Piezometer Readings."* KU has completed actions to implement this recommendation.	Addendum A-Stability analysis report completed in January, 2011. No further action scheduled.
55	Scrubber Pond	*The analyses presented appear limited to a circular surface; different types of failure surfaces should be analyzed and optimized.*	"Per MACTEC's January 2011 *Addendum A, Report of Geotechnical Exploration and Slope Stability Analyses KU Green River Power Station, No. 2 Pond/Coal Runoff Pond and Scrubber Pond: "A circular failure surface is the accepted industry standard and appropriate for these analyses."* KU agrees with MACTEC and believes it is unnecessary to analyze different types of failure surfaces. KU has completed actions to implement this recommendation.	Addendum A-Stability analysis report completed in January, 2011. No further action scheduled.
56	Scrubber Pond	*The analysis should consider all critical stages over the life of the pond including pond full conditions. These conditions would need to be determined in conjunction with the hydraulic recommendations above. The hydraulic analysis should provide a phreatic surface through the embankment.*	KU completed a comprehensive Hydrologic and Hydraulic (H&H) analysis and concluded that the Scrubber Pond "pond full" condition is elevation 402.5. Because this elevation is lower than the more conservative water surface elevation of approximately 405 used by MACTEC for modeling the phreatic surface for the Steady State-Maximum Surcharge Pool, additional modeling is unnecessary. KU has completed actions to implement this recommendation.	H&H analysis report completed in July, 2011. No further action scheduled.

Table 1 (continued) – KU Response to EPA Contractor Recommendations for Green River Station CCR Impoundments

	Impoundment	EPA Contractor Recommendation	KU Plan	KU Schedule
57	Scrubber Pond	*AMEC recommends restoration of the interior slopes and crest, and frequent monitoring of the relatively steep downstream slopes and wet area below the south embankment for any signs of distress.*	KU plans to restore the interior slopes and crest to the design geometry as part of ongoing routine maintenance operations. Qualified KU personnel routinely inspect the Scrubber Pond on a weekly basis and monitor areas of concern noted from previous inspections.	Work scheduled to begin by the summer 2012 and be completed by fall 2013. Routine weekly monitoring ongoing.
58	Scrubber Pond	*Twelve piezometers, of which 10 are remaining, were installed in 2010 (July and August) to support the recent stability analyses. It would be prudent for the Green River Power Station to maintain and protect these instruments, and document monitoring frequently until base line phreatic readings are apparent. After that time, a regular frequency should be maintained and the results evaluated by an engineer. Monitoring should include pond and river levels and should include additional readings and evaluation in response to elevated pond levels or specific rainfall events.*	KU plans to continue to maintain and protect the three piezometers on the Scrubber Pond. Qualified KU personnel monitor and document instrumentation at least twice a year and more frequently as needed. KU plans to continue having documentation periodically evaluated by engineers. KU monitors rainfall, pond and river levels daily.	Instrument maintenance, monitoring and evaluation ongoing.
59	Scrubber Pond	*AMEC recommends additional instrumentation, especially at the crest and toe of critical slopes, be installed as budgets or development of any future problems allow.*	KU is planning to evaluate the need to install additional instrumentation at the crest and toe of critical slopes. KU plans to install any necessary instrumentation as appropriate if future problems develop.	If needed, instrumentation will be installed by the summer 2012. As necessary if future problems develop.
60	Scrubber Pond	*AMEC recommends KU evaluate the need to install piezometer(s) below the south embankment.*	KU is planning to evaluate the need to install additional instrumentation below the south embankment.	If needed, instrumentation will be installed by third quarter 2012.
61	Scrubber Pond	*AMEC recommends that the current inspection program by the plant be expanded to include at least monthly instrumentation monitoring and pond and river levels.*	Qualified KU personnel monitor instrumentation at least twice a year and more frequently as needed. KU monitors pond and river levels daily.	Monitoring ongoing.

Table 1 (continued) – KU Response to EPA Contractor Recommendations for Green River Station CCR Impoundments

	Impoundment	EPA Contractor Recommendation	KU Plan	KU Schedule
62	Scrubber Pond	*AMEC has reviewed the 2009 inspection reports and determined KENTUCKY UTILITIES has adequate annual inspections by a Profession Engineer. We recommend this type of annual inspection program and report by a Professional Engineer be continued at least yearly, in addition to the inspections by facility personnel.*	KU plans to conduct inspections for the Scrubber Pond using professional engineers on a yearly basis.	Yearly inspections scheduled.
63	Scrubber Pond	*Due to the recent slide repair on the south dike of Ash Treatment Basin #1 and the Coal Runoff Pond, the recent surficial slide repair at the southwest corner of the Scrubber Pond and recent repair of the east dike of Ash Treatment Basin #2, AMEC recommends additional inspections be performed by Professional Engineer should any problems, such as seepage, scarps, etc., be encountered with the repairs or if new similar problems develop.*	Qualified KU personnel routinely inspect the Scrubber Pond on a weekly basis and monitor areas of concern noted from previous inspections. If needed, KU plans additional inspections by a professional engineer should any problems develop.	Routine weekly monitoring ongoing.
64	Scrubber Pond	*AMEC recommend KU perform frequent inspections of the embankments and wet area below the south embankment.*	Qualified KU personnel routinely inspect the Scrubber Pond on a weekly basis and monitor areas of concern noted from previous inspections.	Routine weekly monitoring ongoing.
65	Coal Runoff Pond	*AMEC recommends that an appropriately conservative design storm rainfall and freeboard depth in accordance with MSHA guidelines be applied to the impoundment's watershed to assure that the dam and decant system can safely store, control, and discharge the design flow. Based on the small size and significant rating for the Scrubber Pond, the MSHA design storm would be the ½ PMF.*	KU utilizes Kentucky dam safety regulations rather than MSHA guidelines to evaluate the performance of Coal Combustion Residual (CCR) impoundments. In KU's opinion, Kentucky regulations provide an appropriately conservative design storm rainfall. KU completed a comprehensive Hydrologic and Hydraulic (H&H) analysis and concluded that the Coal Runoff Pond performs in accordance with Kentucky dam safety regulations. KU will continue to operate and maintain the Coal Runoff Pond to meet applicable state regulations. KU has completed actions to implement this recommendation.	H&H analysis report completed in July, 2011. No further action scheduled.
66	Coal Runoff Pond	*Hydraulic calculations should also be completed to determine the rate at which the discharge structure and associated piping could pass the design storm, if necessary, or draw down elevated water surfaces following such an event.*	KU completed hydraulic calculations as part of a comprehensive Hydrologic and Hydraulic (H&H) analysis and concluded that the Coal Runoff Pond performs in accordance with Kentucky dam safety regulations. KU has completed actions to implement this recommendation.	H&H analysis report completed in July, 2011. No further action scheduled.

Table 1 (continued) – KU Response to EPA Contractor Recommendations for Green River Station CCR Impoundments

	Impoundment	EPA Contractor Recommendation	KU Plan	KU Schedule
67	Coal Runoff Pond	*The study should consider all critical stages over the life of the pond including pond full conditions. MSHA guidelines recommend a minimum freeboard of 3 feet.*	Kentucky dam safety regulations do not address pond full conditions. KU completed a comprehensive Hydrologic and Hydraulic (H&H) analysis which considered all critical stages over the life of the pond including pond full conditions. The analysis concluded that the Coal Runoff Pond performs satisfactorily under pond full conditions and in accordance with Kentucky dam safety regulations. KU utilizes Kentucky regulations rather than MSHA guidelines to determine minimum freeboard. According to KDOW's Memorandum No. 5 the freeboard hydrograph "is the hydrograph used to establish the minimum elevation of the top of dam." Therefore a freeboard of 0.0 or more meets the minimum criteria set forth by Kentucky regulations. KU typically maintains an available freeboard of approximately 3.5 feet for the Coal Runoff Pond. KU has completed actions to implement this recommendation.	H&H analysis report completed in July, 2011. No further action scheduled.
68	Coal Runoff Pond	*In the opinion of the assessing professional engineer, the criteria for minimum safety factors should be in accordance with USACE EM 1110-2-1902 with a minimum seismic safety factor of 1.2 as recommended by 2007 MSHA Coal Mine Impoundment Inspection and Plan Review Handbook, page 88. Likewise, if the dam does not meet the above seismic factor of safety, then the stability of the embankment should be analyzed and the amount of embankment deformation or settlement that may occur should be evaluated to assure that sufficient section of the crest will remain intact to prevent a release from the impoundment.*	The Coal Runoff Pond is under the jurisdiction of the Kentucky Department for Environmental Protection (KYDEP) which specifies a minimum seismic safety factor of 1.0 with the reservoir at the normal pool. KU retained MACTEC Engineering and Consulting, Inc. (MACTEC) to conduct a slope stability analysis for the Coal Runoff Pond embankments. MACTEC's slope stability analyses confirm seismic factor of 1.0. See MACTEC's, *Report of Geotechnical Exploration and Slope Stability Analyses KU Green River Power Station, No. 2 Pond/Coal Runoff Pond and Scrubber Pond.* Additionally, the distance from the embankment crest to free surface water is greater than 200 feet so KU does not believe an embankment failure would cause a release of material from the impoundment. KU has completed actions to implement this recommendation.	MACTEC slope stability analysis report completed in December, 2010. No further action scheduled.

Table 1 (continued) – KU Response to EPA Contractor Recommendations for Green River Station CCR Impoundments

	Impoundment	EPA Contractor Recommendation	KU Plan	KU Schedule
69	Coal Runoff Pond	*Section 1 is located on the south embankment of the Coal Runoff Pond. The results of the analyses should be reviewed when the final report is completed The analysis should consider all critical stages over the life of the pond including pond full conditions. These conditions would need to be determined in conjunction with the hydraulic recommendations above. The hydraulic analysis should provide a phreatic surface through the embankment.*	KU completed a comprehensive Hydrologic and Hydraulic (H&H) analysis and concluded that the Coal Runoff Pond "pond full" condition is elevation 404.0. Because this elevation is lower than the more conservative water surface elevation of 405 used by MACTEC for modeling the phreatic surface for the Steady State-Maximum Surcharge Pool, additional modeling is unnecessary. KU has completed actions to implement this recommendation.	H&H analysis report completed in July, 2011. No further action scheduled.
70	Coal Runoff Pond	*A rapid-drawdown should be performed for upstream embankment in case the pond would need to be lowered in response to a problem, and the downstream embankment in relation to flooding of Green River.*	KU requested that MACTEC conduct a rapid-drawdown analysis on sections of the Coal Runoff Pond embankments. Per MACTEC's December, 2010 *Report of Geotechnical Exploration and Slope Stability Analyses KU Green River Power Station, No. 2 Pond/Coal Runoff Pond and Scrubber Pond,* the analyzed sections exceed target safety factors for rapid-drawdown established by Kentucky dam safety regulations. KU requested that MACTEC conduct additional rapid drawdown analysis for the downstream sections of the Coakl Runnoff Pond. Per MACTEC's July 2011 *Addendum B, Report of Geotechnical Exploration and Slope Stability Analyses KU Green River Power Station, No. 2 Pond/Coal Runoff Pond and Scrubber Pond: "As outlined in Section 5 of our Report of Geotechnical Exploration and Slope Stability Analyses, dated December 3, 20 I 0, the target factor of safety for a rapid drawdown analysis is a minimum of 1.1 according to USACE EM 11 10-2-1902: Slope Stability, and 1.2 according to KEEC Design Criteria for Dams & Associated Structures (40 1 KAR 4:030, KAR 4:040). The lowest factors of safety, as shown in Table 2, exceed the minimum values."* KU has reviewed the additional rapid-drawdown analysis provided by MACTEC and considers implementation of this recommendation complete.	MACTEC slope stability analysis report completed in December, 2010. Addendum B-Stability analysis report completed in July, 2011. No further action scheduled.

Table 1 (continued) – KU Response to EPA Contractor Recommendations for Green River Station CCR Impoundments

	Impoundment	EPA Contractor Recommendation	KU Plan	KU Schedule
71	Coal Runoff Pond	*The friction angle value used for the CCW in the analysis appears high for ash material. Typical ash friction values are 28 degrees for compacted, 24 degrees for loosely compacted, and 11 degrees for uncompacted material. Consideration should be given for lowering strength values to account for inconsistencies within the fill or foundation materials.*	Per MACTEC's January 2011 *Addendum A, Final Geotechnical Report Main Ash Pond Slope Stability Analysis and Repair, Green River Station, Addendum A, Report of Geotechnical Exploration and Slope Stability Analyses KU Green River Power Station, No. 2 Pond/Coal Runoff Pond and Scrubber Pond: "MACTEC has extensive experience with CCW at LG&E-KU facilities in Kentucky and with other similar facilities in the southeastern United States. Laboratory testing (both triaxial and direct shear tests) of CCW from other facilities indicated friction angles ranging from 28 degrees to over 42 degrees. Based on the results of the sensitivity analysis, our experience, and published data, we selected friction angles of 20 degrees for fly ash and 28 degrees for bottom ash to provide, in our opinion, the appropriate level of conservatism."* KU agrees with MACTEC and believes it is unnecessary to lower strength values. KU has completed actions to implement this recommendation.	Addendum A-Stability analysis report completed in January, 2011. No further action scheduled.
72	Coal Runoff Pond	*Consideration should also be given to allowing some time for water levels in the piezometers to develop and stabilize.*	KU retained MACTEC to install two additional piezometers at the Coal Runoff Pond in July 2011. Qualified KU staff will continue to routinely monitor instrumentation on a monthly interval for the remainder of 2011 and at least twice a year thereafter.	Routine monitoring ongoing.
73	Coal Runoff Pond	*The analyses presented appear limited to a circular surface; different types of failure surfaces should be analyzed and optimized.*	"Per MACTEC's January 2011 *Addendum A, Final Geotechnical Report Main Ash Pond Slope Stability Analysis and Repair, Green River Station, Addendum A, Report of Geotechnical Exploration and Slope Stability Analyses KU Green River Power Station, No. 2 Pond/Coal Runoff Pond and Scrubber Pond: "A circular failure surface is the accepted industry standard and appropriate for these analyses."* KU agrees with MACTEC and believes it is unnecessary to analyze different types of failure surfaces. KU has completed actions to implement this recommendation.	Addendum A-Stability analysis report completed in January, 2011. No further action scheduled.

Table 1 (continued) – KU Response to EPA Contractor Recommendations for Green River Station CCR Impoundments

	Impoundment	EPA Contractor Recommendation	KU Plan	KU Schedule
74	Coal Runoff Pond	*In the opinion of the assessing professional engineer, the analyses should be performed in accordance with these recommendations. The analysis should consider all critical stages over the life of the pond including pond full conditions. These conditions would need to be determined in conjunction with the hydrologic and hydraulic recommendations above. The hydrologic and hydraulic analysis will provide maximum water levels in the pond and a phreatic surface through the embankment.*	KU completed a comprehensive Hydrologic and Hydraulic (H&H) analysis and concluded that the Coal Runoff Pond "pond full" condition is elevation 404.0. Because this elevation is lower than the more conservative water surface elevation 405 used by MACTEC for modeling the phreatic surface for the Steady State-Maximum Surcharge Pool, additional modeling is not necessary. KU has completed actions to implement this recommendation.	Slope stability report completed in December, 2011. H&H analysis report completed in July, 2011. No further action scheduled.
75	Coal Runoff Pond	*Final Stability Report and Addendum A to this report note "methods are available for improving the minimum factor of safety such as installation of a rock buttress on the downstream slope to provide more sliding resistance along the predicted slip circle". In their comments to the draft report KU states they are "currently evaluating the results and plan to study options to improve the section if necessary to increase the factor of safety above KY DEP recommended values". AMEC recommends KU continue their ongoing evaluation and develop plans to improve the stability of the south embankment to meet applicable minimum safety requirements.*	KU is continuing to evaluate options to improve the section if necessary.	KU plans to complete the evaluation of improvement options by December 2011 and if necessary implement physical improvements by December 2012.
76	Coal Runoff Pond	*Twelve piezometers, of which 10 are remaining, were installed in 2010 (July and August) to support the recent stability analyses. It would be prudent for the Green River Power Station to maintain and protect these instruments, and document monitoring frequently until base line phreatic readings are apparent. After that time, a regular frequency should be maintained and the results evaluated by an engineer. Monitoring should include pond and river levels and should include additional readings and evaluation in response to elevated pond levels or specific rainfall events.*	In July 2011, KU installed additional instrumentation at the crest and toe of the south embankment of the Coal Runoff Pond. KU plans to continue to maintain and protect the two piezometers on the Coal Runoff Pond. Qualified KU personnel monitor and document instrumentation at least twice a year and more frequently as needed. KU plans to continue having documentation periodically evaluated by engineers. KU monitors rainfall, pond and river levels daily.	Instrument maintenance, monitoring, and evaluation ongoing.

Table 1 (continued) – KU Response to EPA Contractor Recommendations for Green River Station CCR Impoundments

	Impoundment	EPA Contractor Recommendation	KU Plan	KU Schedule
77	Coal Runoff Pond	*AMEC recommends additional instrumentation, especially at the crest and toe of critical slopes, be installed as budgets or development of any future problems allow.*	In July 2011, KU installed additional instrumentation at the crest and toe of the south embankment of the Coal Runoff Pond.	Additional instrumentation installed in July 2011. Instrument maintenance, monitoring, and evaluation ongoing.
78	Coal Runoff Pond	*AMEC recommends KU evaluate the need to install peizometer(s) at the crest and below the south embankment of the Coal Runoff Pond.*	In July 2011, KU installed two piezometers at the crest and toe of the south embankment of the Coal Runoff Pond. KU has completed actions to implement this recommendation.	Piezometers installed in July 2011.
79	Coal Runoff Pond	*AMEC recommends that the current inspection program by the plant be expanded to include at least monthly instrumentation monitoring and pond and river levels.*	Qualified KU personnel monitor instrumentation at least twice a year and more frequently as needed. KU has completed actions to implement this recommendation.	Monitoring ongoing.
80	Coal Runoff Pond	*AMEC has reviewed the 2009 inspection reports and determined KU has adequate annual inspections by a Profession Engineer. We recommend this type of annual inspection program and report by a Professional Engineer be continued at least yearly, in addition to the inspections by facility personnel.*	KU plans to conduct inspections for the Coal Runoff Pond using professional engineers on a yearly basis.	Yearly inspection scheduled.
81	Coal Runoff Pond	*Due to the recent slide repair on the south dike of Ash Treatment Basin #1 and the Coal Runoff Pond, the recent surficial slide repair at the southwest corner of the Scrubber Pond and recent repair of the east dike of Ash Treatment Basin #2, AMEC recommends additional inspections be performed by Professional Engineer should any problems, such as seepage, scarps, etc., be encountered with the repairs or if new similar problems develop.*	Qualified KU personnel routinely inspect the Coal Runoff Pond on a weekly basis and monitor areas of concern noted from previous inspections. If needed, KU plans additional inspections by a professional engineer should any problems develop.	Routine weekly monitoring ongoing.
82	Coal Runoff Pond	*The January 2011 inspection by ATC for the Coal Runoff Pond generally identified normal maintenance type items. KU "s response to the draft report stated they are developing plans to address the priority maintenance items in 2011. AMEC recommends KU perform frequent inspections of the south embankment.*	Qualified KU personnel routinely inspect the Coal Runoff Pond on a weekly basis and monitor the south embankment areas of concern noted from previous inspections.	Routine weekly monitoring ongoing.

PPL companies

Generation Services

KU Green River Station Ponds: Hydrologic and Hydraulic Assessment

July 25, 2011

Submitted by:

Reta White
Civil Engineer
LG&E and KU Services Company

US EPA ARCHIVE DOCUMENT

PPL companies
Generation Services

Table of Contents

KU Green River Station Ponds: Hydrologic and Hydraulic Assessment 1

Executive Summary 1

1.0 Introduction and Site Description 2
1.1 Introduction 2
1.2 Site Description 2
1.2.1 Ash Treatment Basin #1 2
1.2.2 Coal Pile Runoff Pond 2
1.2.3 Scrubber Pond 3
1.2.4 Ash Treatment Basin #2 3

2.0 Methodology and Results 5
2.1 Methodology 5
2.2 Results 8

3.0 Recommendations 9

Appendices 10
Appendix A: Project Location & Drainage Area Map 11
Appendix B: Design Drawings 13
Appendix C: Storage & Spillway Rating Curves 28
Appendix D: SITES Software Analysis 34
Appendix E: Hydraulic Operation Guidelines 36
Appendix F: Continuous Monitoring Instrumentation 38
Appendix G: HEC-HMS Output 41
Appendix H: SITES Output 110
Appendix I: Continuous Monitoring Equipment Technical Information 132

US EPA ARCHIVE DOCUMENT

US EPA ARCHIVE DOCUMENT

LG&E KU
PPL companies
Generation Services

KU Green River Station Ponds: Hydrologic and Hydraulic Assessment

Executive Summary

LG&E and KU Services conducted a hydrologic and hydraulic study of the KU Green River Station Ponds to evaluate the performance and safety of the ponds and their discharge structures during various rainstorm events. Minimum criteria set forth by the Kentucky Division of Water's (KDOW) Engineering Memorandum No. 5 were used to evaluate the study results.

On the basis of this evaluation, it was determined that KU Green River Station Ponds meet all capacity requirements set forth by KDOW. Prior analysis conducted by MACTEC Engineering revealed that the possibility of overtopping existed for Ash Treatment Basin #2 during a significant rain event. In order to ensure hydrologic and hydraulic capacity targets were met, KU completed raising Ash Treatment Basin #2's embankments to a uniform crest height of 400.50 ft in July of 2011. This evaluation reflects the hydrologic and hydraulic improvements to Ash Treatment Basin #2.

It is recommended that the following pool levels and/or weir elevations (as indicated by an asterisk) not be exceeded in each pond in order to maintain KDOW's hydrologic and hydraulic capacity criteria:

Ash Treatment Basin #1:	447.60*
Coal Pile Runoff Pond:	404.00
Scrubber Pond:	402.50
Ash Treatment Basin #2:	398.00*

US EPA ARCHIVE DOCUMENT

1.0 Introduction and Site Description

1.1 Introduction

The following hydrologic and hydraulic analysis was developed to assess the performance of the principal spillway structures for the Kentucky Utilities (KU) Green River Generating Station Ponds. The site is located in Muhlenberg County, Kentucky, approximately six miles north of Central City, Kentucky. A project location map is located in Appendix A.

1.2 Site Description

1.2.1 Ash Treatment Basin #1

The Green River Ash Treatment Basin #1 (ATB1) was constructed in 1977 to manage coal combustion residuals (CCRs), including fly ash and bottom ash produced through the coal combustion process at the power generating station. The station CCR inflows discharge through a pipeline near the southern corner of the ash pond.

Ash Treatment Basin #1 has a side-hill configuration with earth embankments at the northeast, southeast and southwest limits. The embankments have a minimum crest elevation of approximately 449.00 North American Vertical Datum of 1988 (NAVD88). The drainage area map in Appendix A delineates the ash pond's drainage basin (area A1) and shows the topography of the site.

The principal spillway of Ash Treatment Basin #1 consists of a concrete riser box structure connected to a 36-inch reinforced concrete pipe (RCP) set at a 2 percent slope (Appendix B). The riser supports an adjustable skimmer and stop log unit which enables operators to adjust the water level and discharge rate of the structure. The stop log unit allows adjustable weir elevations ranging from 427.60 NAVD88 to 447.60 NAVD88. The 36-inch RCP discharges at the downstream toe of the southeast embankment into Ash Treatment Basin #2.

1.2.2 Coal Pile Runoff Pond

The Green River Coal Pile Runoff Pond was constructed in 1949 to manage runoff from the adjacent coal pile during rain events. The runoff pond also receives treated wastewater flows from oil/water separators and an onsite wastewater treatment plant which discharge into the pond at its south corner. Additional runoff is received by the pond from two small watersheds directly to the southwest of Ash Treatment Basin #1. These additional watersheds are delineated on the location map as area A5 and area A6 (Appendix A).

The Coal Pile Runoff Pond has a side-hill configuration with earth embankments at the northeast and southeast limits. The embankments have a minimum crest elevation of approximately

405.00 NAVD88. The drainage area map in Appendix A delineates the runoff pond's drainage basin (area A2) and shows the topography of the site.

The principal spillway of the Coal Pile Runoff Pond consists of an 18-inch corrugated metal pipe (CMP) set at a 1.5 percent slope (Appendix B). The 18-inch CMP discharges at the downstream toe of the northeast embankment into Ash Treatment Basin #2.

1.2.3 Scrubber Pond

The Green River Scrubber Pond was constructed in 1975 to manage scrubber residuals produced through the flue-gas desulfurization (FGD) process at the power generating station. However, the station's FGD units were retired in 2003, and the pond no longer receives scrubber residuals.

The Scrubber Pond has a side-hill configuration with earth embankments at the northeast, southeast and southwest limits. The embankments have a minimum crest elevation of approximately 403.50 NAVD88. The drainage area map in Appendix A delineates the ash pond's drainage basin (area A3) and shows the topography of the site.

The Scrubber Pond does not have a principal spillway. However, two high-head submersible dewatering pumps with a combined maximum pumping capacity of 500 gallons per minute (gpm) are installed in the south corner of the pond (Appendix B). The pumps are configured to automatically engage when the pool elevation reaches 399.00 NAVD88 and disengage when the pool elevation is at or below 397.00 NAVD88. When engaged, the pumps push excess water to Ash Treatment Basin #2.

1.2.4 Ash Treatment Basin #2

The Green River Ash Treatment Basin #2 (ATB2) was constructed in 1949 to manage coal combustion residuals (CCRs), including fly ash and bottom ash produced through the coal combustion process at the power generating station. Presently, the ash pond does not receive direct CCR flows from the generating station, but functions instead as a secondary settling basin to Ash Treatment Basin #1, the Coal Pile Runoff Pond and the Scrubber Pond.

Ash Treatment Basin #2 has a side-hill configuration with earth embankments at the northeast, southeast and southwest limits. In July 2011, KU raised Ash Treatment Basin #2's embankments to a minimum crest elevation of 400.50 NAVD88 to allow greater variability in pool elevations for operational needs (Appendix B). The drainage area map in Appendix A delineates the ash pond's drainage basin (area A4) and shows the topography of the site.

US EPA ARCHIVE DOCUMENT

The principal spillway of Ash Treatment Basin #2 consists of a concrete riser box structure connected to a 30-inch corrugated metal pipe (CMP) set at a 2.67 percent slope (Appendix B). The riser supports an adjustable skimmer and stop log unit which enables operators to adjust the water level and discharge rate of the structure. The stop log unit allows adjustable weir elevations ranging from 393.00 NAVD88 to 398.00 NAVD88. The 30-inch CMP discharges at the downstream toe of the embankment through a permitted discharge point (NPDES # KY0002011) to a rip-rap lined channel which conveys flows to the Green River.

US EPA ARCHIVE DOCUMENT

US EPA ARCHIVE DOCUMENT

2.0 Methodology and Results

2.1 Methodology

Site topographic data developed by L.R. Kimball and Associates in February, 2010 and bathymetric data developed by Associated Engineers, Inc in July, 2010 were used to delineate individual watersheds and create a stage-storage curve for each pond (Appendix C). Characteristics of each pond's watershed basin are summarized in Table 1. CCR process flows from the generating station to Ash Treatment Basin #1 and wastewater treatment flows to the Coal Pile Runoff Pond were modeled as baseflow for each pond.

Table 1. Green River Pond Basin Characteristics

Basin Name	Total Drainage Area (Acres)	Composite Curve Number	Time of Concentration (Minutes)	Baseflow (cfs)
Ash Treatment Basin #1	64	81	33	4
Coal Pile Runoff	12	84	9	1
Scrubber	11	88	24	0
Ash Treatment Basin #2	40	76	40	0

Stage-discharge curves of the principal spillway structures for Ash Treatment Basin #1 and Ash Treatment Basin #2 were developed from original design drawings and field measurements. The design drawings are located in Appendix B. All elevations noted in the design drawings reference the National Geodetic Vertical Datum of 1929 (NGVD29) and required a conversion to NAVD88 to be used in the analysis. The stage-discharge curves were calculated based on weir flow, orifice flow or pipe flow. See Appendix C for individual stage-storage curves and stage-discharge curves for each pond.

The principal spillway pipe geometry for the Coal Pile Runoff Pond was field measured and inputted directly into the hydrologic modeling software. Similarly, the dual pump parameters for the Scrubber Pond were obtained through field reconnaissance and the pump manufacturer's documents and entered directly into the modeling software (Appendix B).

Green River Station's Ash Treatment Basin #1 and Scrubber Pond are classified as Class (A) Low Hazard Dams according to regulations published by the Kentucky Department for Natural Resources and Environmental Protection's (KDEP) Division of Water (KDOW). The Green River Coal Pile Runoff Pond and Ash Treatment Basin #2 are not currently classified as dams in Kentucky. Although Ash Treatment Basin #2 previously did not meet height or capacity requirements to be classified as a dam in Kentucky, the recent increase in crest height to elevation 400.50 ft NAVD88 and subsequent storage calculations indicate that the pond may currently meet the capacity requirements for classification. In light of this information and the need to study the dams in series, hydrologic modeling for all of the ponds was based on minimum hydrologic and hydraulic design criteria for a Class (A) Low Hazard Dam as set forth

in KDOW's Engineering Memorandum No. 5. Table 2 summarized the current dam heights and empty storage volumes of KU Green River Station Ponds.

Table 2. Size and Classification of Green River Impoundment Structures

Basin Name	Effective Dam Height (feet)	Storage Volume (acre-feet)	Current Kentucky Hazard Classification
Ash Treatment Basin #1	54	150	Low Hazard (A)
Coal Pile Runoff	15	17	None
Scrubber	20	57	Low Hazard (A)
Ash Treatment Basin #2	17	59	None

Precipitation values were obtained from KDOW Engineering Memorandum No. 2, "Rainfall Frequency Values for Kentucky" (EM No. 2). Storm criteria used for this analysis are outlined in Table 3.

Table 3. Summary of Hydrologic Criteria

Hydrograph	Frequency	Duration	Precipitation (inches)
Emergency Spillway	100-Year	6-Hour	4.80
Freeboard	6,000-Year	6-Hour	7.66*
Principal Spillway	100-Year	24-Hour	6.70
Operational	6,000-Year	6-Hour	7.66*

*Calculated according to KDOW Memo No.5 Class (A) dam criteria.

Precipitation values listed in EM No. 2 are taken from isopluvial maps published in the National Weather Service's Technical Paper No. 40 and Technical Paper No. 49. Technical Paper No. 40 provides guidance on how to estimate values for return periods greater than 100 years. Using the precipitation values listed in EM No. 2 and the guidance provided in Technical Paper No. 40, the calculated 6-hour freeboard and operational rainfall of 7.66 inches was estimated to be equivalent to a 6,000-year rainfall event or a 0.02% annual exceedance probability rainfall event (Table 3).

Although the operational hydrograph was modeled using the same precipitation value as the freeboard hydrograph, the operational hydrograph used normal pools as the starting elevation in each pond (Table 4). All other hydrographs were modeled using pond full conditions.

Although an emergency spillway does not exist on any of the Green River Station Ponds, an emergency spillway hydrograph (EM) was developed for each pond in order to evaluate the performance of each pond's principal spillway structure. It is understood that KDOW has historically permitted structures with relatively small watersheds to operate without an emergency spillway if the principal spillway can adequately pass the emergency spillway hydrograph without overtopping the pond.

US EPA ARCHIVE DOCUMENT

The freeboard hydrograph precipitation was calculated according to the following equation provided for a Class (A) dam in KDOW's Memorandum No. 5:

$$\boldsymbol{P_A = P_{100} + 0.12 \times (PMP - P_{100})}$$

P_A: Freeboard Hydrograph Precipitation
P_{100}: 6-hour, 100-year precipitation
PMP: Probable Maximum Precipitation

All design parameter calculations were based on hydrologic design procedures contained in the NRCS National Engineering Handbook, Section 4 "Hydrology" (NEH-4).

US EPA ARCHIVE DOCUMENT

2.2 Results

The HEC-HMS 3.5 program developed by the United States Army Corps of Engineers (USACE) was used to analyze Green River Station Ponds. Table 4 shows a summary of the modeling results. See Appendix G for complete HEC-HMS analyses output. For comparative purposes, a hydrologic and hydraulic analysis was also performed in SITES modeling software and is discussed in Appendix D.

Table 4. Summary of HEC-HMS 3.5 Analysis

Emergency Spillway Hydrograph				
	ATB1	Coal Pile Runoff	Scrubber	ATB2
Starting Pool (feet)*	447.6	404.0	402.5	398.0
Peak Inflow (cfs)	116.3	40.0	24.7	66.4
Peak Outflow (cfs)	6.0	12.0	1.0	15.5
Peak Elevation (feet)*	448.1	404.0	402.8	399.5
Freeboard (feet)	0.9	1.0	0.7	1.0
Freeboard Hydrograph				
	ATB1	Coal Pile Runoff	Scrubber	ATB2
Starting Pool (feet)*	447.6	404.0	402.5	398.0
Peak Inflow (cfs)	224.3	68.2	43.7	129.2
Peak Outflow (cfs)	13.3	13.5	1.1	25.7
Peak Elevation (feet)*	448.5	404.7	403.1	400.2
Freeboard (feet)	0.5	0.3	0.4	0.3
Principal Spillway Hydrograph				
	ATB1	Coal Pile Runoff	Scrubber	ATB2
Starting Pool (feet)*	447.6	404.0	402.5	398.0
Peak Inflow (cfs)	254.6	99.6	55.0	135.8
Peak Outflow (cfs)	10.0	12.0	1.0	21.6
Peak Elevation (feet)*	448.3	404.0	402.8	399.9
Freeboard (feet)	0.7	1.0	0.7	0.6
Operational Hydrograph				
	ATB1	Coal Pile Runoff	Scrubber	ATB2
Starting Pool (feet)*	445.1	402.0	398.0	396.0
Peak Inflow (cfs)	224.3	68.2	43.7	130.8
Peak Outflow (cfs)	23.3	11.3	1.0	34.6
Peak Elevation (feet)*	446.4	403.7	399.0	398.7
Freeboard (feet)	2.6	1.3	4.5	1.8

*Elevations listed reference NAVD88.

US EPA ARCHIVE DOCUMENT

3.0 Recommendations

The principal spillways within Green River Station's Ponds meet all capacity requirements set forth by KDOW. Prior analysis conducted by MACTEC Engineering revealed that the possibility of overtopping existed for Ash Treatment Basin #2 during a significant rain event. In order to ensure hydrologic and hydraulic capacity targets were met, KU completed raising Ash Treatment Basin #2's embankments to a minimum crest height of 400.50 ft in July of 2011 from a previous minimum crest elevation of 399.30 ft. Resulting approximate freeboards are listed in Table 5. Note that according to KDOW's Memorandum No. 5 the freeboard hydrograph "is the hydrograph used to establish the minimum elevation of the top of dam." Therefore, a freeboard of 0.0 or more from the freeboard hydrograph meets the minimum criteria set forth by Kentucky regulations.

Table 5. Ash Treatment Basin #2 Previous and Current Freeboard Calculations

Hydrograph	Peak Elevation	Previous Freeboard	Current Freeboard
Emergency Spillway	399.5	-0.2	1.0
Freeboard	400.2	-0.9	0.3
Principal Spillway	399.9	-0.6	0.6
Operational	398.7	0.6	1.8

For operational purposes the following maximum operating pool elevations and/or weir elevations (as indicated by an asterisk) listed are recommended to ensure hydrologic and hydraulic capacity requirements are maintained. All elevations listed reference NAVD88.

Ash Treatment Basin #1:	447.60*
Coal Pile Runoff Pond:	404.00
Scrubber Pond:	402.50
Ash Treatment Basin #2:	398.00*

Further, recommended operational guidelines are outlined in Appendix E of this report.

US EPA ARCHIVE DOCUMENT

US EPA ARCHIVE DOCUMENT

Appendices

US EPA ARCHIVE DOCUMENT

Appendix A: Project Location & Drainage Area Map

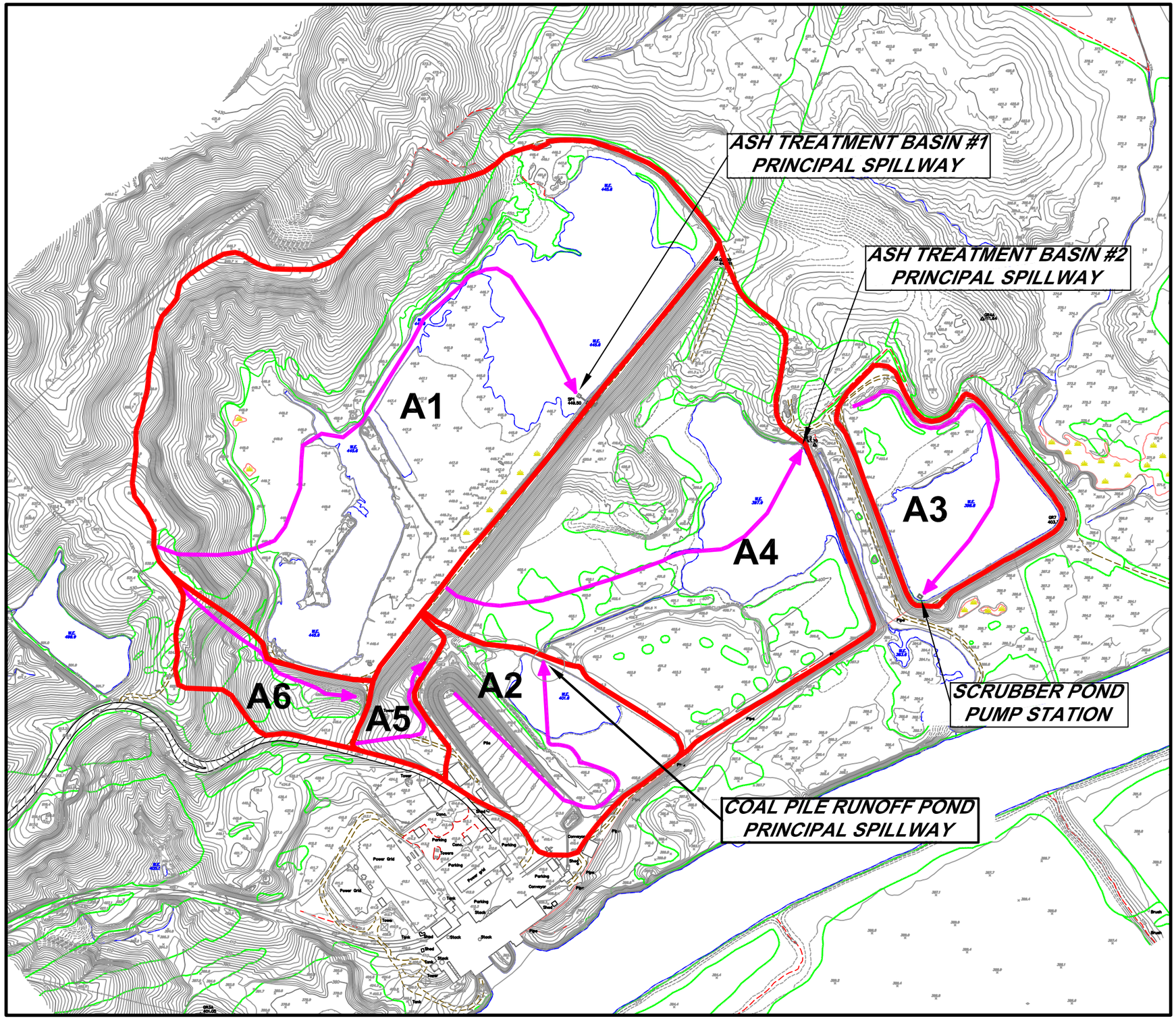

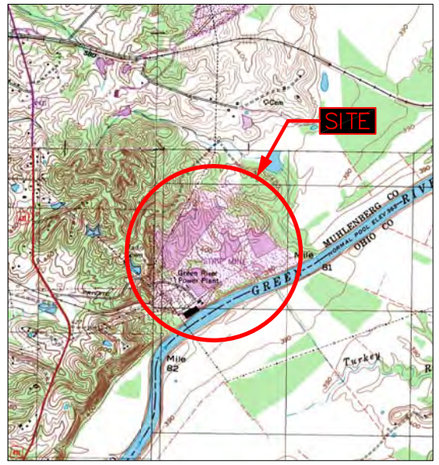

LOCATION MAP

LEGEND

- Drainage Flow Path
- Obscured Contour
- Depression Contour
- Tree Line
- Brush Line
- Unpaved Road
- Edge of Water
- Stream
- Fence Line
- Utility Pole
- W.E. Water Elevation
- Photo Control Point
- Swamp

NOTES:

1. Source of Topographic Information: From ground control surveys dated December 22, 2009 by L.R. Kimball Assoc., INC. and from aerial photography dated December 29, 2009.
2. Horizontal control is based on NAD83 Coordinates provided by L.R. Kimball Assoc., INC.
3. Vertical control is based on NAVD88 datum provided by L.R. Kimball Assoc., INC.
4. Mapping scale of 1"=100' with 2' Contour Interval.

DRAINAGE AREAS (ACRES)	
A1	64
A2	12.0
A3	11.0
A4	40.0
A5	3.0
A6	5.0

Title:
ASH POND
DRAINAGE AREA MAP

Location and Unit:
SCHEMATIC DIAGRAM
GREEN RIVER GENERATING STATION
CENTRAL CITY, KENTUCKY

Scale: 1"=400'
Drawn: JWH
Drawn Date: 07/12/2011
Checked: R.W.
Checked Date: –
Approved: RETA_WHITE

Kentucky Utilities Company

JOB NO.			DRAWING_NO	Rev.
–			1	0

DMS_VERSION

W:\Document Management\Drafting - Plants\KU Plants\Green River\STORMWATER RUNOFF\GR-STORMWATER RUNOFF.dwg, 7/12/2011 1:09:54 PM, e026215

US EPA ARCHIVE DOCUMENT

Appendix B: Design Drawings

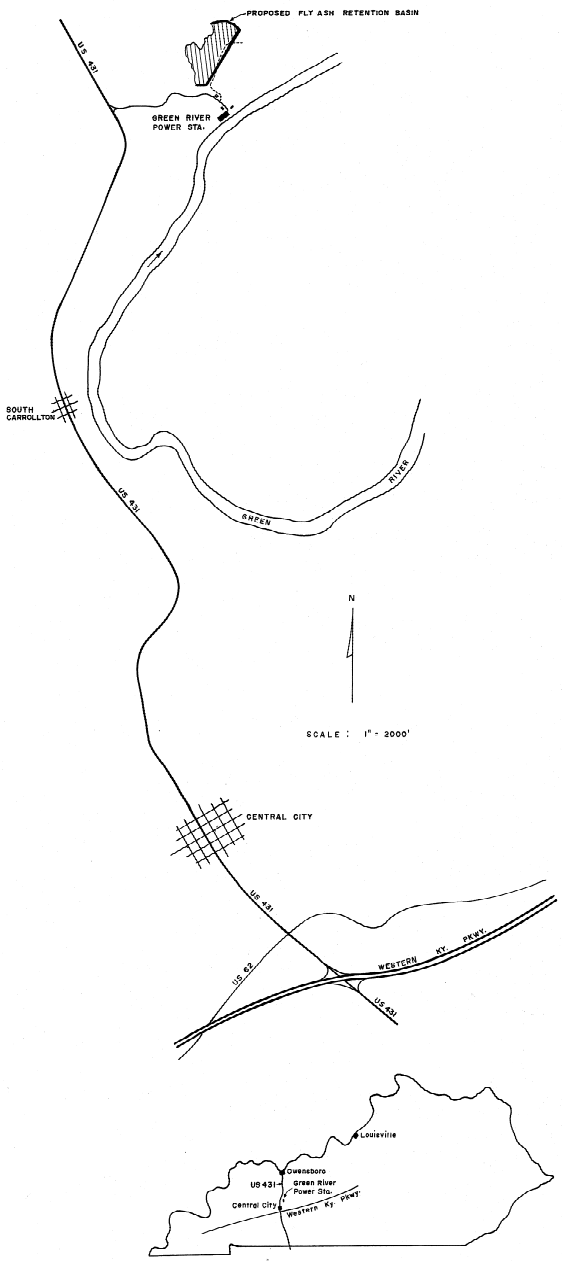

KENTUCKY UTILITIES COMPANY

FLY ASH RETENTION BASIN

GREEN RIVER POWER STATION
CENTRAL CITY, MUHLENBERG COUNTY, KENTUCKY

STRUCTURE CLASSIFICATION: CLASS (A) — LOW HAZARD

INDEX

SHEET NO.	DESIGNATION
1	TITLE SHEET AND LOCATION MAP
2	TYPICAL DIKE SECTIONS
3	PLAN-SITE AND TEST BORING LOCATIONS
4	PLAN-PROPOSED FLY ASH RETENTION BASIN
5	OUT FLOW STRUCTURE
6	DIKE CROSS SECTIONS – BASE LINE 'D'
7-19	DIKE CROSS SECTIONS – BASE LINE 'A'
20-22	DIKE CROSS SECTIONS – BASE LINE 'C'
23-29	RETENTION BASIN CROSS SECTIONS

STATE OF KENTUCKY
JAMES J. FLAIG
6337
REGISTERED
PROFESSIONAL ENGINEER

KENTUCKY UTILITIES COMPANY
FLY ASH RETENTION BASIN
GREEN RIVER POWER STATION
CENTRAL CITY, MUHLENBERG COUNTY, KENTUCKY

TITLE SHEET AND LOCATION MAP

THE H.C. NUTTING COMPANY
GEOTECHNICAL ENGINEERS
AIRPORT ROAD
CINCINNATI, OHIO

APPROVED FOR THE H. C. NUTTING COMPANY
BY
REGISTERED ENGINEER NO. 6337 STATE OF KENTUCKY

DATE: MARCH 1976
REVISED: MAY 1976
JOB NO. 6614.14
DRAWN: H.C.N.
SCALE: 1" = 2000'
CHECKED: CRL

SHEET 1 OF 29

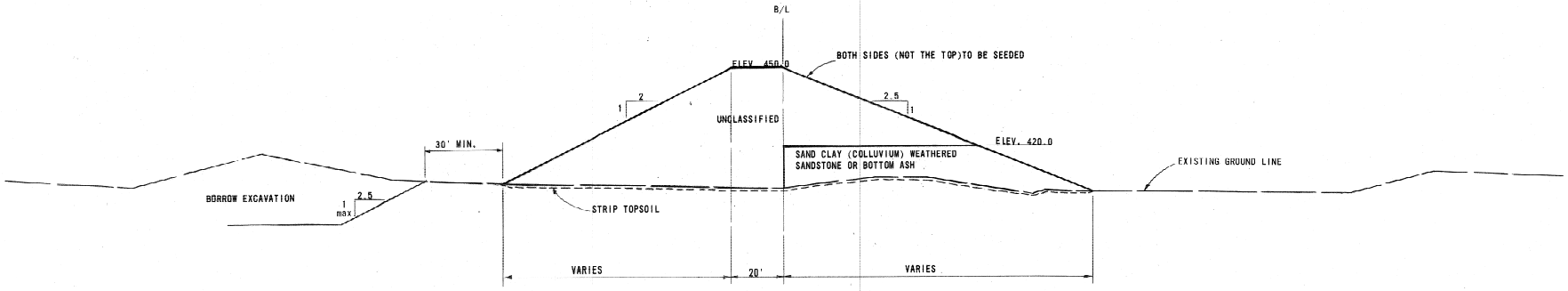

TYPICAL SECTION - NO UNDERCUTTING REQUIRED
BASELINE 'A', 'C', AND 'D'

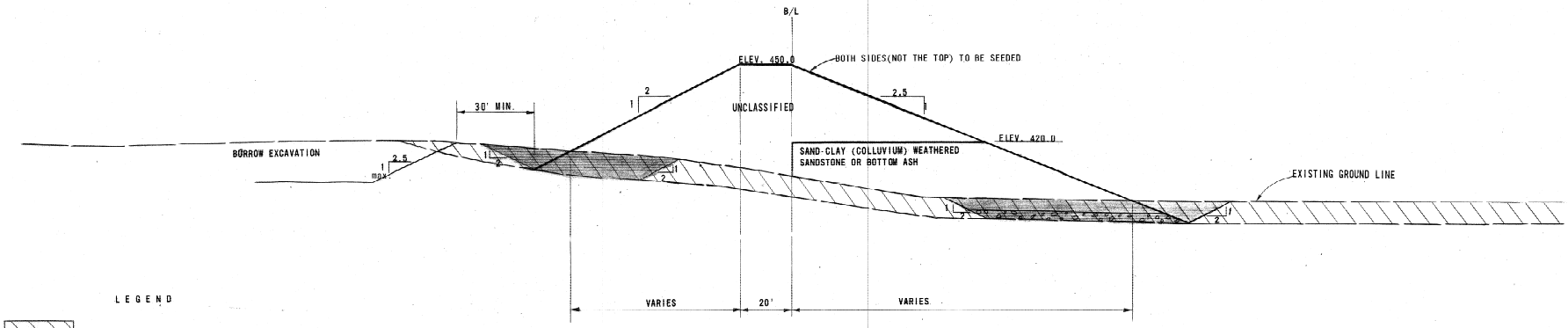

TYPICAL SECTION - UNDERCUTTING REQUIRED
BASELINE 'A'

LEGEND

- EXISTING FLY-ASH TO REMAIN IN PLACE
- EXISTING FLY-ASH TO BE REMOVED AND REPLACED WITH SELECTED FILL
- RANDOM FILL TO REMAIN IN PLACE
- RANDOM FILL TO BE REMOVED AND REPLACED WITH SELECTED FILL
- 3' GRANULAR DRAINAGE LAYER

KENTUCKY UTILITIES COMPANY
FLY ASH RETENTION BASIN
GREEN RIVER POWER STATION
CENTRAL CITY, MUHLENBERG COUNTY, KENTUCKY

TYPICAL DIKE SECTIONS

THE H. C. NUTTING COMPANY
GEOTECHNICAL ENGINEERS
AIRPORT ROAD
CINCINNATI, OHIO

APPROVED FOR THE H. C. NUTTING COMPANY
BY
REGISTERED ENGINEER NO. 6337 STATE OF KENTUCKY

STATE OF KENTUCKY
JAMES J. FLAIG
6337
REGISTERED
PROFESSIONAL ENGINEER

DATE: MARCH 1976	JOB NO. 6814.14	SHEET 2 OF 29
DRAWN: H.C.N.	SCALE: NONE	
CHECKED: GRL		

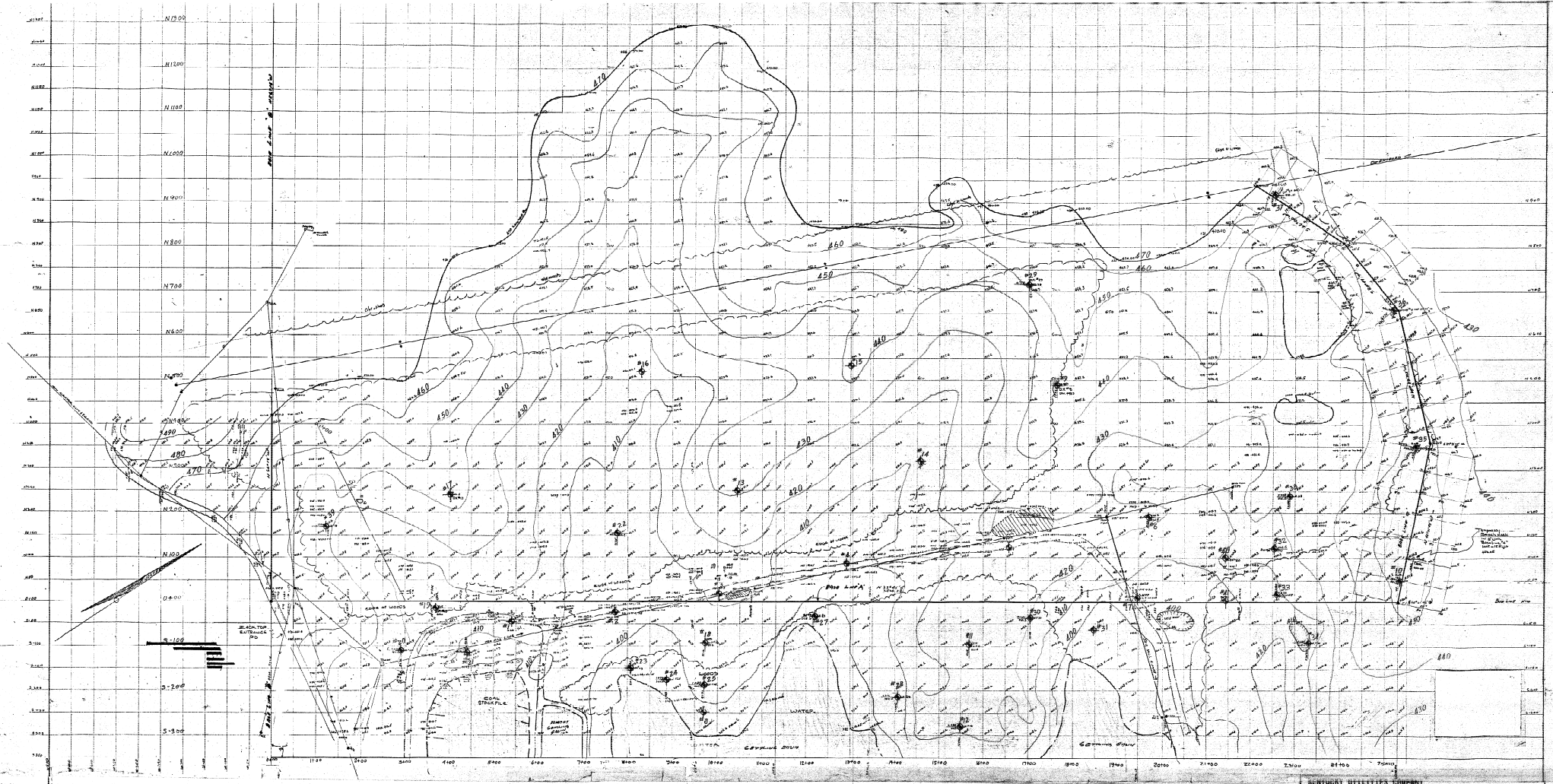

KENTUCKY UTILITIES COMPANY
FLY ASH RETENTION BASIN
GREEN RIVER POWER STATION
CENTRAL CITY, MUHLENBERG COUNTY, KENTUCKY

PLAN - SITE AND TEST BORING LOCATIONS

THE H. C. NUTTING COMPANY
GEOTECHNICAL ENGINEERS
AIRPORT ROAD
CINCINNATI, OHIO

APPROVED FOR THE H. C. NUTTING COMPANY
BY _____
REGISTERED ENGINEER NO. 6337 STATE OF KENTUCKY

STATE OF KENTUCKY
JAMES J. FLAIG
6337
REGISTERED
PROFESSIONAL ENGINEER

DATE: MARCH 1978	JOB NO. 6814.14	SHEET 3 OF 29
DRAWN: H.C.N.	SCALE: 1" = 100'	
CHECKED: GRL		

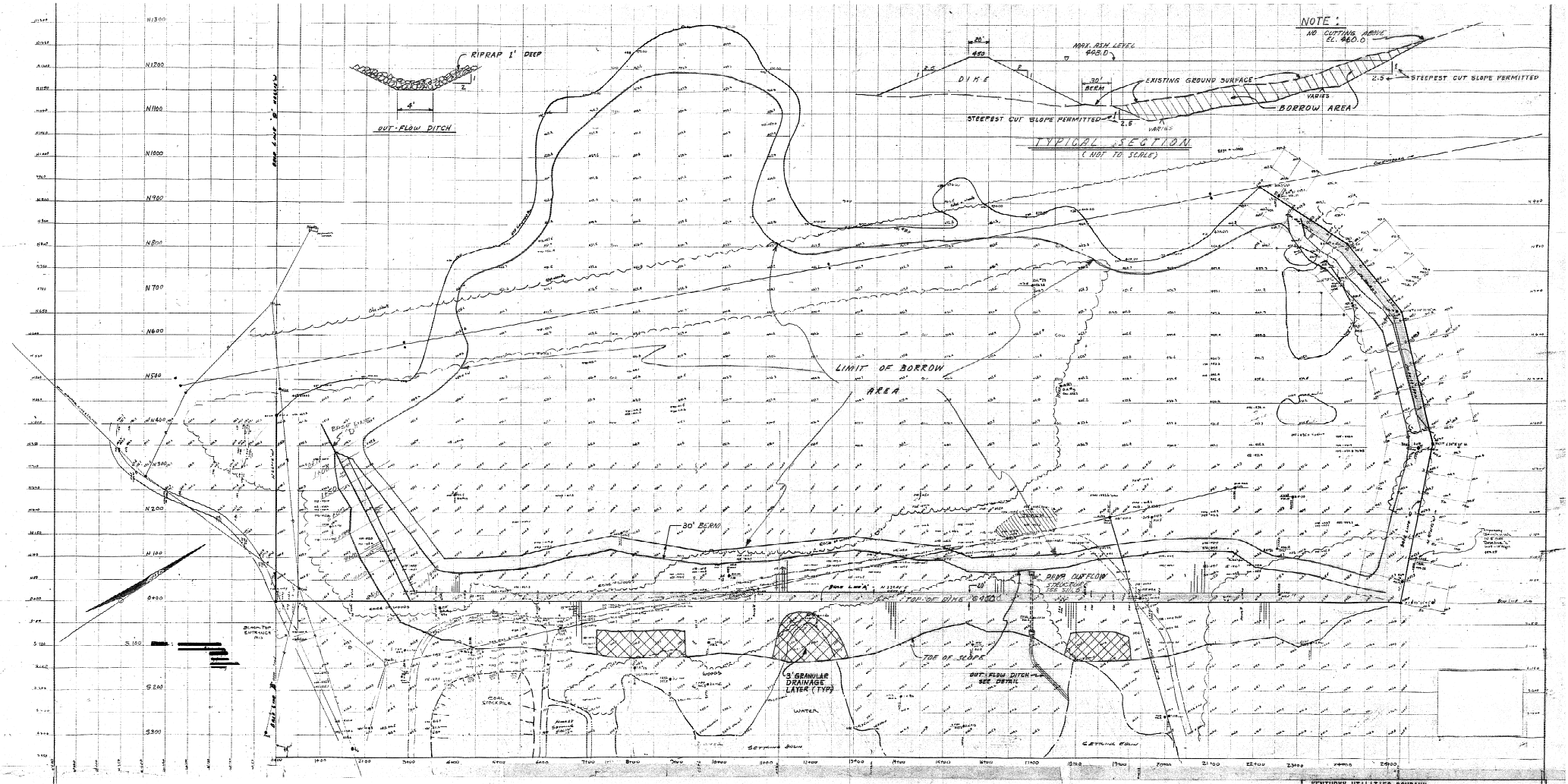

KENTUCKY UTILITIES COMPANY
FLY-ASH RETENTION BASIN
GREEN RIVER POWER STATION
CENTRAL CITY, MUHLENBERG COUNTY, KENTUCKY

PLAN-PROPOSED FLY-ASH RETENTION BASIN

THE H. C. NUTTING COMPANY
GEOTECHNICAL ENGINEERS
AIRPORT ROAD
CINCINNATI, OHIO

STATE OF KENTUCKY
JAMES J. FLAIG
6337
REGISTERED PROFESSIONAL ENGINEER

APPROVED FOR THE H. C. NUTTING COMPANY
BY James J. Flaig
REGISTERED ENGINEER NO. 6337 STATE OF KENTUCKY

DATE: MARCH 1978	JOB NO. 6814.14	SHEET 4 OF 29
DRAWN: H.C.N.	SCALE: 1" = 100'	
CHECKED: CRL		

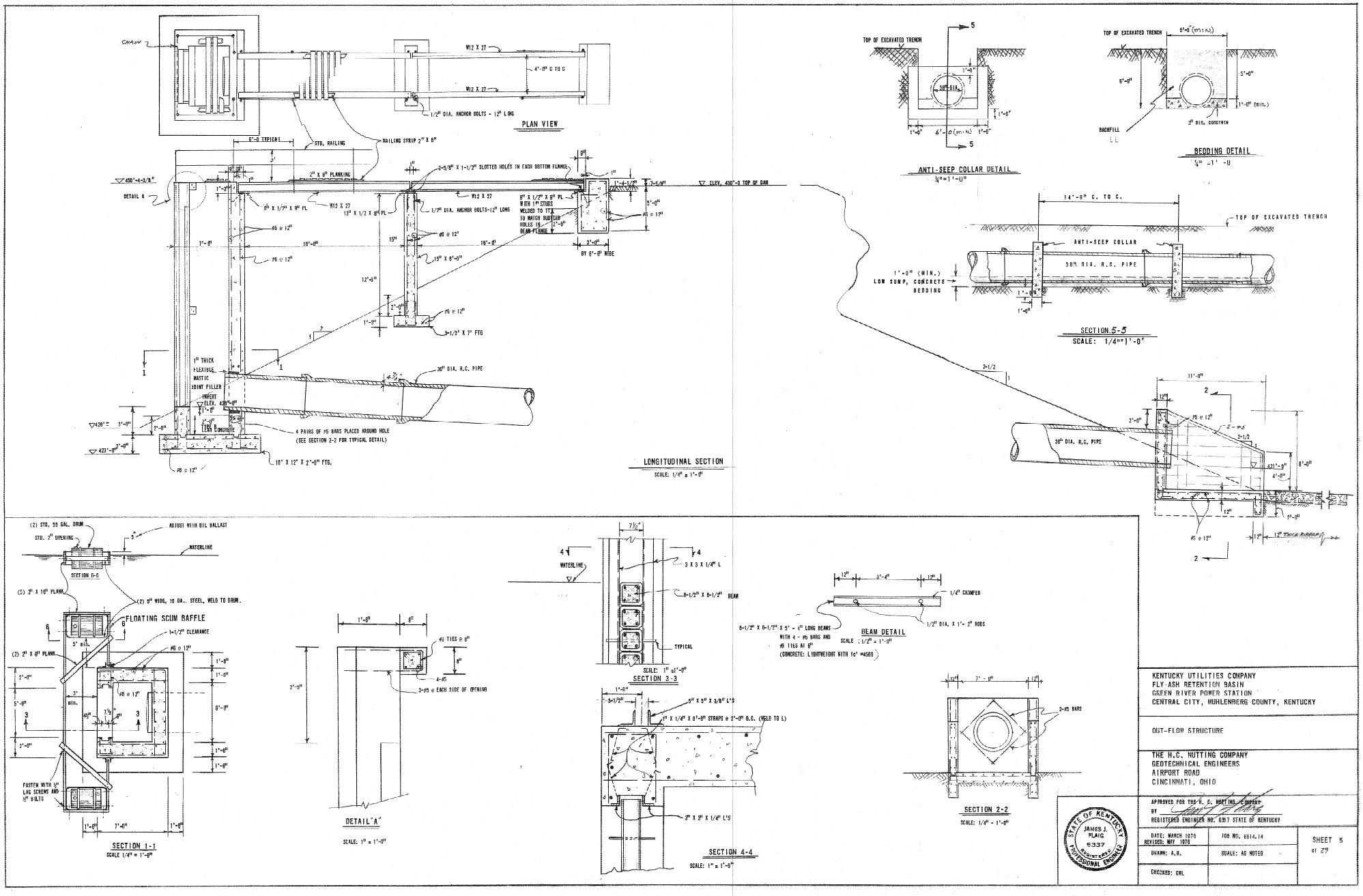
PLAN VIEW
LONGITUDINAL SECTION
SCALE: 1/4" = 1'-0"
ANTI-SEEP COLLAR DETAIL
BEDDING DETAIL
SECTION 5-5
SCALE: 1/4"=1'-0"
SECTION 1-1
SCALE 1/4" = 1'-0"
DETAIL "A"
SCALE: 1" = 1'-0"
SECTION 3-3
SCALE: 1" = 1'-0"
BEAM DETAIL
SCALE: 1/2" = 1'-0"
SECTION 4-4
SCALE: 1" = 1'-0"
SECTION 2-2
SCALE: 1/4" = 1'-0"
FLOATING SCUM BAFFLE
ANTI-SEEP COLLAR
30" DIA. R.C. PIPE
ELEV. 450'-0" TOP OF DAM
ELEV. 428'-0"
ELEV. 423'-0"
4 PAIRS OF #5 BARS PLACED AROUND HOLE
(SEE SECTION 2-2 FOR TYPICAL DETAIL)
10" X 12" X 2'-0" FTG.
3-1/2" X 7" FTG
1" THICK FLEXIBLE MASTIC JOINT FILLER
FASTEN WITH 1/4" LAG SCREWS AND 1/4" BOLTS
KENTUCKY UTILITIES COMPANY
FLY-ASH RETENTION BASIN
GREEN RIVER POWER STATION
CENTRAL CITY, MUHLENBERG COUNTY, KENTUCKY
OUT-FLOW STRUCTURE
THE H.C. NUTTING COMPANY
GEOTECHNICAL ENGINEERS
AIRPORT ROAD
CINCINNATI, OHIO
APPROVED FOR THE H. C. NUTTING COMPANY
BY
REGISTERED ENGINEER NO. 6337 STATE OF KENTUCKY
STATE OF KENTUCKY
JAMES J. FLAIG
6337
REGISTERED PROFESSIONAL ENGINEER
DATE: MARCH 1976
REVISED: MAY 1976
JOB NO. 6814.14
DRAWN: A.B.
SCALE: AS NOTED
CHECKED: CRL
SHEET 5
of 29

US EPA ARCHIVE DOCUMENT

GR-S-00405

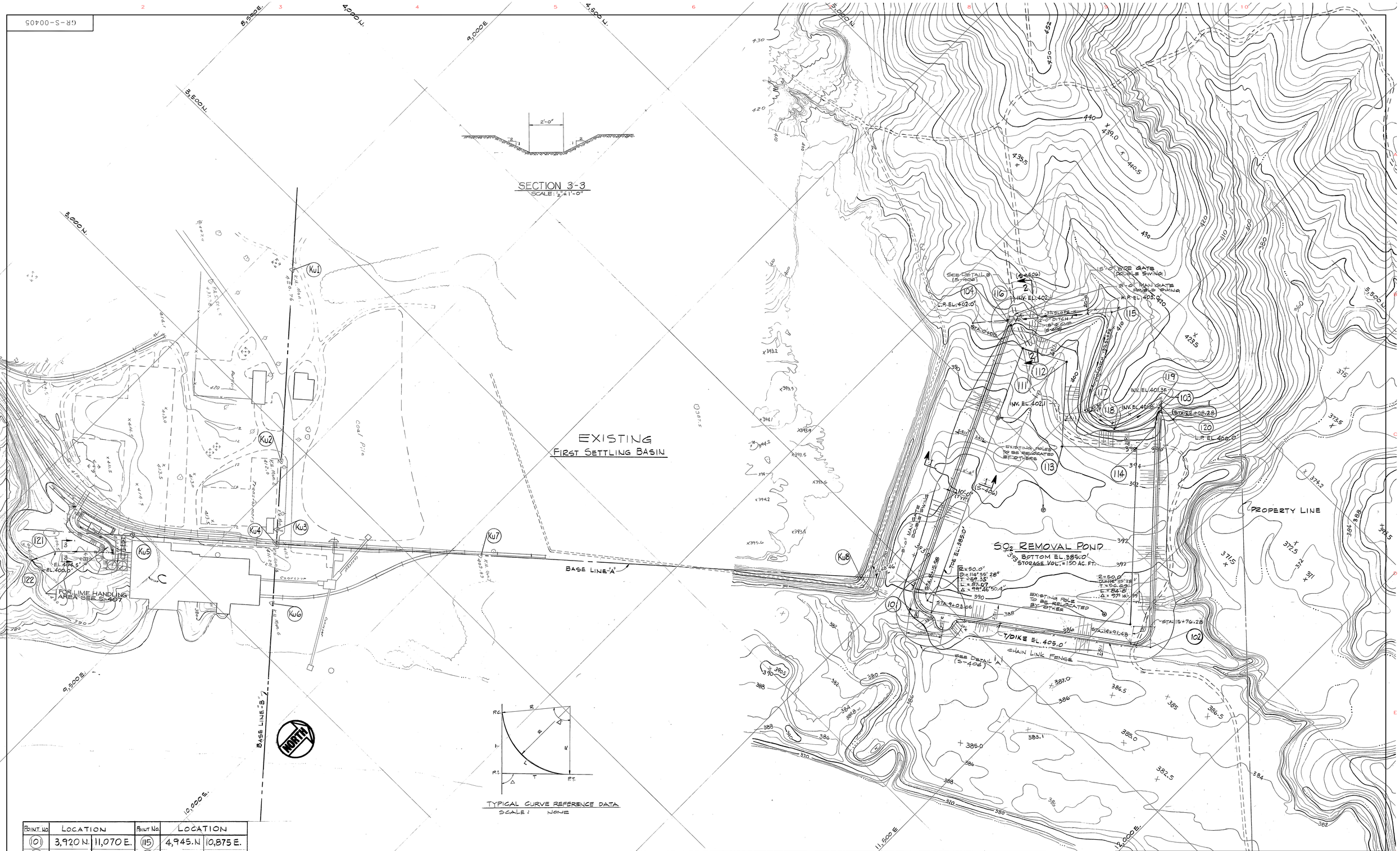

POINT NO.	LOCATION		POINT NO.	LOCATION	
101	3,920 N.	11,070 E.	115	4,945 N.	10,875 E.
102	4,327 N.	11,645 E.	116	4,715 N.	10,685 E.
103	4,835 N.	11,180 E.	117	4,685 N.	11,025 E.
104	4,710 N.	10,693 E.	118	4,705 N.	11,127 E.
111	4,675 N.	10,765 E.	119	4,850 N.	11,165 E.
112	4,750 N.	10,885 E.	120	4,850 N.	11,225 E.
113	4,565 N.	11,050 E.	KU8	3,881.6 N	10,908.7 E.
114	4,715 N.	11,210 E.	121	2,286.0 N	9,182.0 E
			122	2,220.0 N	9,152.0 E

GENERAL NOTES

1. ALL WORK SHOWN ON THIS DRAWING SHALL BE DONE BY THE SO_2 REMOVAL POND DIKE WORK CONTRACTOR IN ACCORDANCE WITH THE SPEC. NO. J-2831.
2. (KU) REFERS TO KENTUCKY UTILITIES CO.'S MONUMENT NUMBERS.

REFERENCE DRAWINGS

S-402	BORING LOCATION PLAN
S-403	SOIL BORING LOGS
S-406	DIKE SECTIONS AND DETAILS

ANY MODIFICATION OR ADDITION TO THIS DRAWING BY AN ORGANIZATION OTHER THAN SARGENT & LUNDY IS NOT THE RESPONSIBILITY OF SARGENT & LUNDY.

REVISIONS

Rev.	Date	Drawn By	Description
	12/03/73	RPP	FOR BID SPEC J-2831
A	02/06/74	RPP	ADD MONUMENT NUMBERS
			REV. SIDE LOC ADD FENCE & CMP
			FOR CONSTR J-2831
B	06/06/74	RPP	REVISED STATIONING
C	09/24/74	LRB	INDIAN HILL 69 KV CONV.
D	06/06/06	HRT	CAD REV

Title
DIKE LOCATION & PLAN
– SO2 REMOVAL POND

Location and Unit
Green River Common

Scale: 1"=100'
Drawn: GRL 1/11/73
Date: 11/09/73
Checked: R. PARKER 02/06/74
Approved: J. MCCLAINSON

JOB NO. 4688

Drawing No. GR-S-00405
Rev. D

Kentucky Utilities Company
an LG&E company

DES Version 2

GR-S-00406

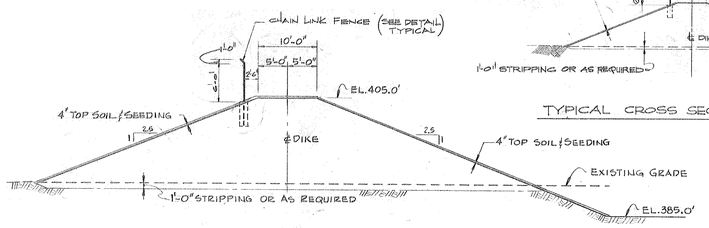

SECTION 1-1 (S-405)
(TYPICAL CROSS-SECTION)
SCALE: 1" = 10'-0"

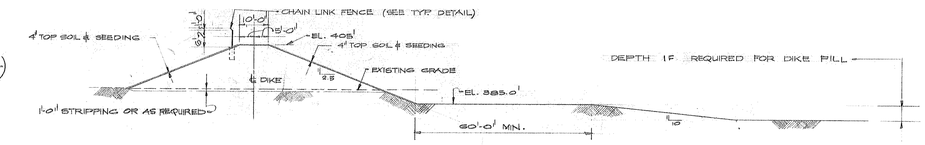

TYPICAL CROSS SECTION FOR EXCAVATION INSIDE POND FOR ADDITIONAL FILL MATERIAL
SCALE 1" = 20'-0"

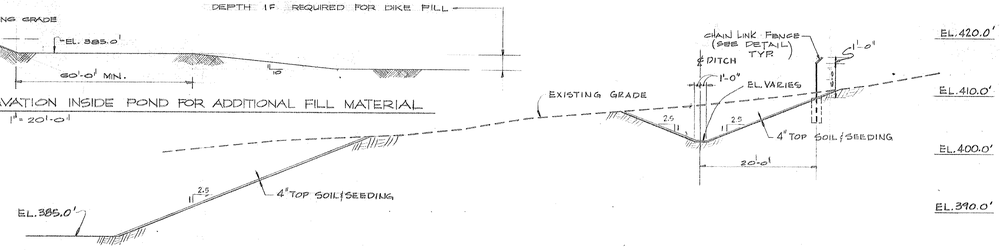

SECTION 2-2 (S-405)
SCALE: 1" = 10'-0"

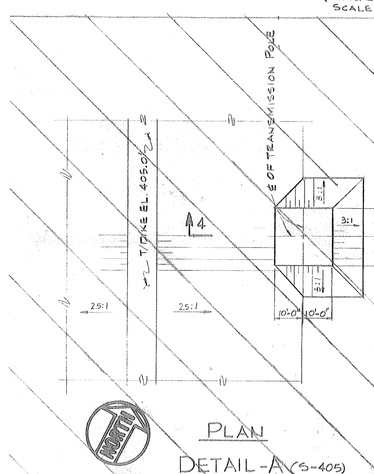

PLAN
DETAIL-A (S-405)
SCALE: 1" = 20'-0"

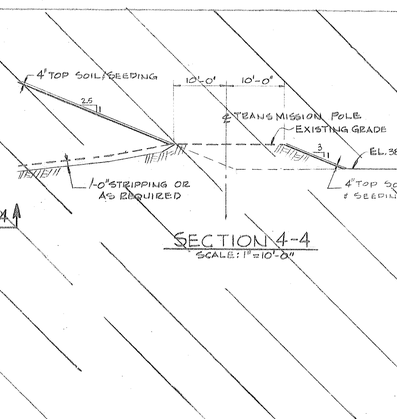

SECTION 4-4
SCALE: 1" = 10'-0"

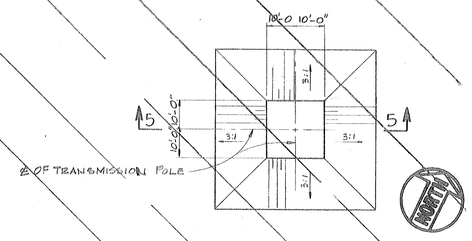

PLAN
DETAIL-B (S-405)
SCALE: 1" = 20'-0"

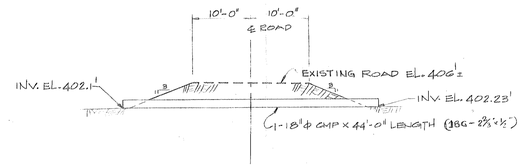

SECTION 5-5
SCALE: 1" = 10'-0"

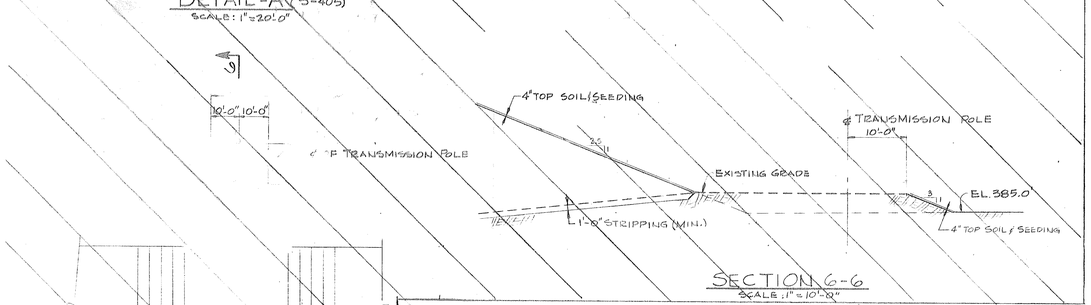

SECTION 6-6
SCALE: 1" = 10'-0"

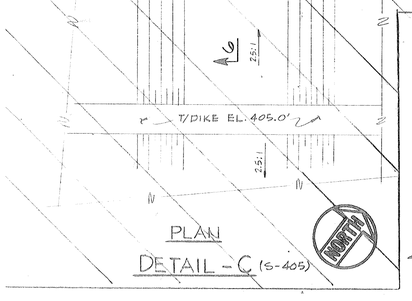

PLAN
DETAIL-C (S-405)

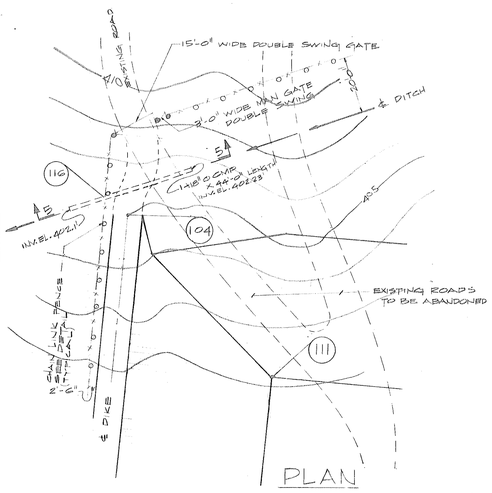

PLAN
DETAIL-B (S-405)
SCALE 1" = 20'-0"

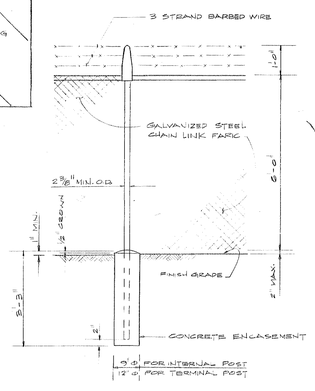

TYPICAL FENCE DETAIL (TYPE TR-3BW)
SCALE: ½" = 1'-0"

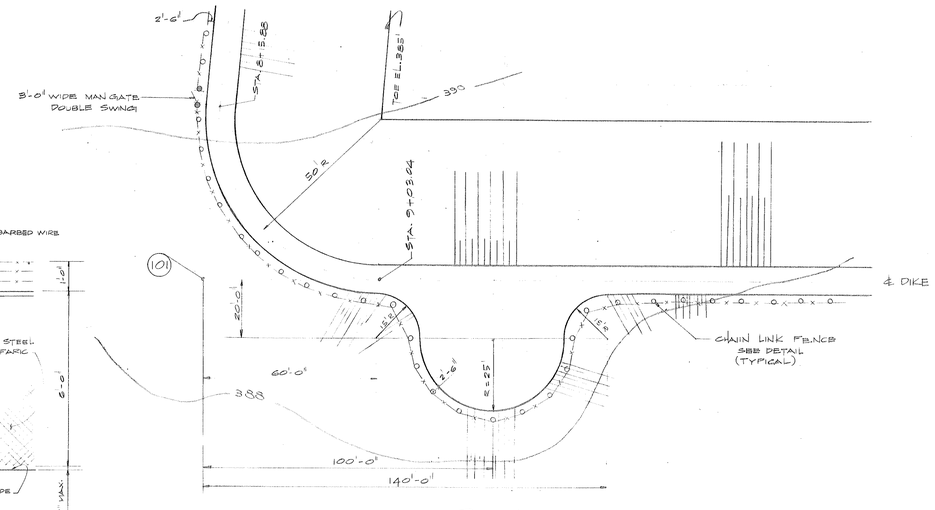

PLAN
DETAIL-A (S-405)
SCALE 1" = 20'-0"

NOTES	
1.	FOR GENERAL NOTES SEE S-405

REFERENCE DRAWINGS	
S-402	BORING LOCATION PLAN
S-403	SOIL BORING LOGS
S-405	DIKE LOCATION & PLAN

REVISIONS

Rev.	Drawn Date	Drawn By	Revision Made
	12/03/73	RPP	FOR BIDS SPEC. J-2831
	12/07/73	RPP	ADDENDUM 1 SPEC. J-2831
A	02/06/74	RPP	ADD DET A & B & STA. 6+05.84 TYP FENCE DET
B	07/11/74	RPP	FOR CONSTR SPEC. J-2831 ADD DIKE CROSS SECTION
C	05/19/06	HRT	CAD REV

Title: DIKE SECTIONS & DETAILS - S02 REMOVAL POND

Location and Unit: Green River Common

Scale: AS NOTED
Drawn: SM SMITH
Date: 12/07/73
Checked: 02/06/74
Approved: J. MCCLAUSKEY

JOB NO.	JOB NO.	JOB NO.	JOB NO.
4688			

Kentucky Utilities Company
an LG&E company

Drawing No. GR-S-00406 Rev. C

DMS Version 2.0

US EPA ARCHIVE DOCUMENT

GSP55, GSP80, GSP130 Sub-Prime® Electric Submersible Dewatering Pumps

The line of Godwin Sub-Prime GSP electric submersible pumps is designed for large dewatering applications requiring high head or high volume. The GSP55, GSP80 and GSP130 models are capable of maximum flow rates from 250 to 900 gpm (15.8 to 56.8 l/sec.) and maximum discharge heads from 75 to 262 feet (23 to 80M). Like the small dewatering and trash handling models in the Sub-Prime line, these large dewatering submersible pumps are suited to tough construction, mining and industrial applications. They feature a slim-line design ideal for fitting into confined spaces and rugged construction for longer life, specifically a cast chromium steel impeller and heavy duty rubber coated adjustable wear parts. Other features and benefits include tandem mechanical seals for dry running and extra protection against leakage, and a dual voltage junction chamber for convenient changeover in the field.

Features

- Convenient top discharge
- Compact slim-line design
- Oversized power cable
- Dual voltage junction chamber
- Dual phase changeover capability for models GSP55 and GSP80
- High performance submersible motor
- Oversized, heavy duty ball bearings
- Tandem mechanical seals – Silicon Carbide on Silicon Carbide primary seal
- Cast Chromium Steel impeller and heavy duty rubber coated adjustable wearparts
- Lightweight aluminum and corrosion resistant stainless steel cooling jacket
- Dry running capabilities
- Optional manual and automatic control panels available

Specifications Three-Phase Models

	Model GSP55	GSP80	GSP130
HP (kW)	5.5 (4.1)	8.0 (6.0)	13.0 (9.7)
Max. GPM (l/sec.)			
HV	550 (34.7)	660 (42)	900 (56.8)
HH	250 (15.8)	250 (15.8)	300 (18.9)
Max. Head - Ft. (M)			
HV	75' (23M)	85' (25.9M)	100' (34.8M)
HH	150' (45.7M)	170' (51.8M)	262' (80M)
Discharge	4" (100mm)	4" (100mm)	4" (100mm)
Cable	65' (20M)	65' (20M)	65' (20M)
RPM	3400	3400	3400
Max. Temp.	103°F (40°C)	103°F (40°C)	103°F (40°C)
PH Range	5.0-8.0	5.0-8.0	5.0-8.0
Voltage	230/460, 575	230/460, 575	230/460, 575
Phase	3	3	3
Amps (230V/460V)			
HV	14/6, 5.5	22/11, 8.7	33.0/16, 13
HH	15/7.5, 6	21/10.7, 8.5	33.0/16, 13
Weight	94 lbs. 43 kg.	107 lbs. 49 kg.	131 lbs. 60 kg.
Max. Solids	.33" (8.5mm)	.33" (8.5mm)	.33" (8.5mm)
Max. Sub.	65' (20M)	65' (20M)	65' (20M)

HV = High Volume
HH = High Head

godwin pumps

US EPA ARCHIVE DOCUMENT

US EPA ARCHIVE DOCUMENT

GSP55, GSP80, GSP130 Sub-Prime® Performance Curves

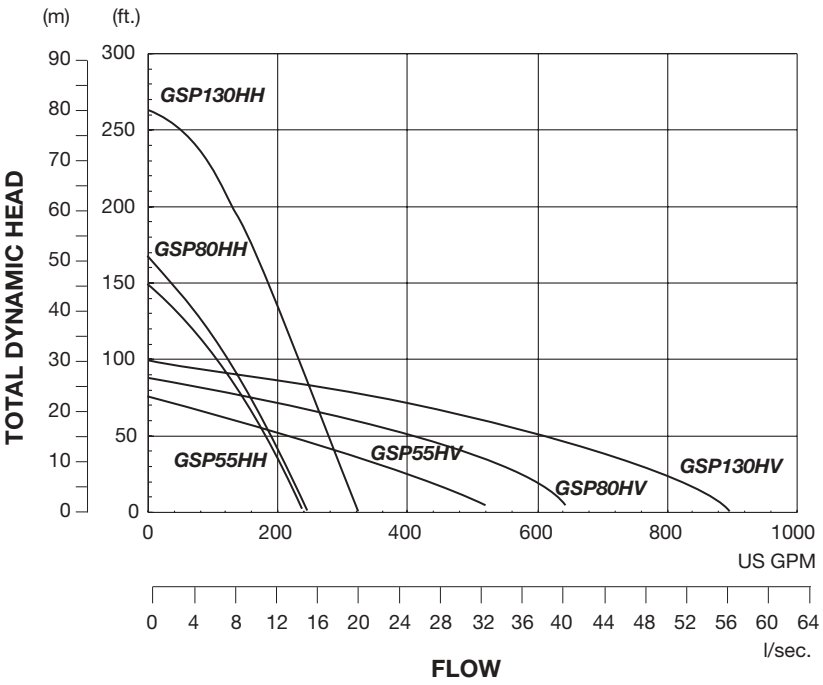

WARNING: Pumps are not designed for use in explosive atmosphere, flammable environments or for pumping volatile liquids.

Design & Construction

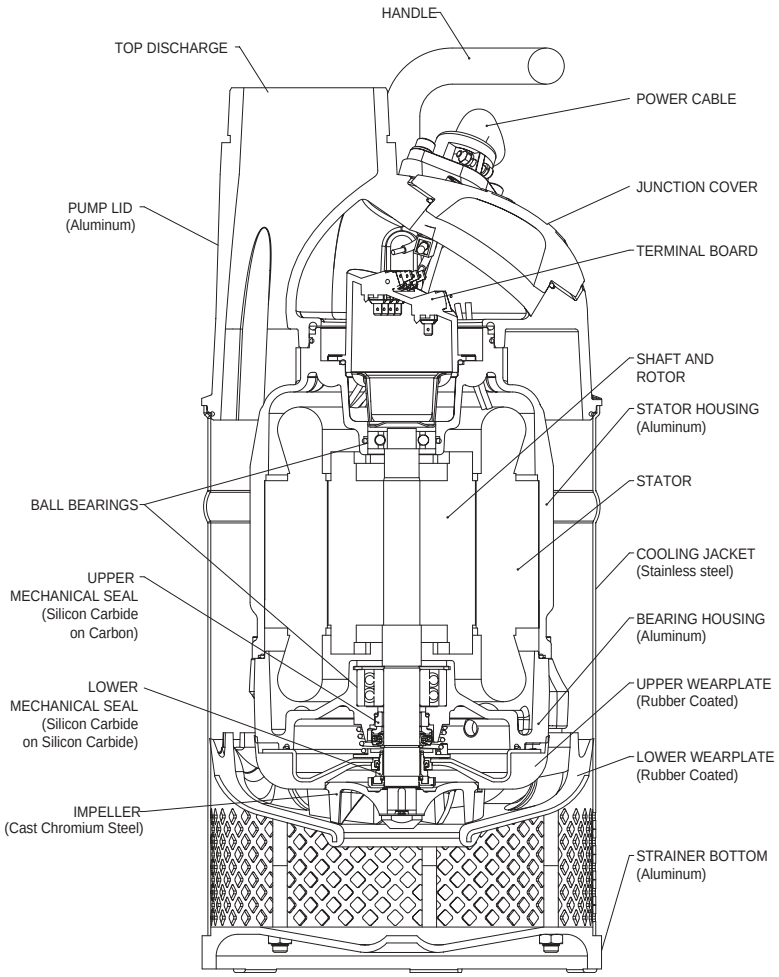

Dimensions

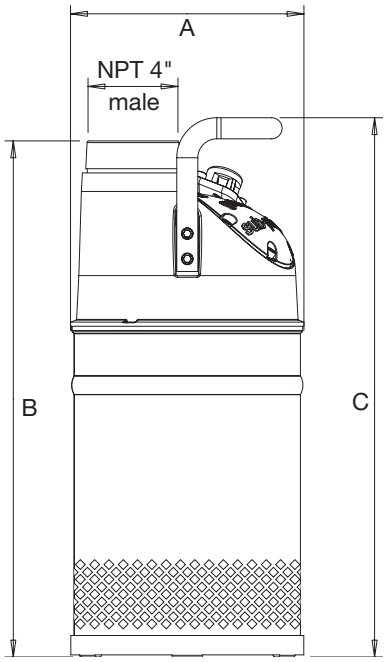

Model	A	B	C
GSP55	10.91" 277mm	24.11" 613mm	25.2" 640mm
GSP80	10.91" 277mm	24.11" 613mm	25.2" 640mm
GSP130	10.91" 277mm	26.28" 668mm	27.36" 695mm

godwin pumps

One Floodgate Road, Bridgeport, NJ 08014, USA
(856) 467-3636 • Fax: (856) 467-4841
Quenington, Cirencester, Glos., GL7 5BX, UK
+44 (0)1285-750271 • Fax: +44 (0)1285-750352
E-mail: sales@godwinpumps.com
www.godwinpumps.com

BRANCH LOCATIONS:

Connecticut • Pennsylvania • New York • Ohio
Illinois • Maryland • Virginia • West Virginia
North Carolina• South Carolina • Georgia
Florida • Texas Montana • California • Washington

Sub-Prime® and the color orange for pumps are registered trademarks of Godwin Pumps of America, Inc.
Specifications and illustrations are subject to revision without notice.
© Copyright 2002-2005 Godwin Pumps of America, Inc. All rights reserved.

GR-C-00001

ABRAMS AERIAL SURVEY CORP.
LANSING, MICHIGAN
A.A.S.C. NO. 14521
PHOTOGRAPHY: APRIL 10, 1976
VERTICAL & HORIZONTAL ACCURACY MEETS REQUIREMENTS IN SPECIFICATION F-2457 FG 3-3.
GRIDS BASED ON KENTUCKY STATE PLANE COORDINATE SYSTEM, SOUTH ZONE.
ELEVATIONS BASED ON MEAN SEA LEVEL

GENERAL NOTES

1. ALL WORK SHOWN ON THIS DRAWING AND OTHER DRAWINGS REFERRED TO THESE GENERAL NOTES SHALL BE DONE BY THE GENERAL WORK CONTRACTOR IN ACCORDANCE WITH PROJECT SPECIFICATION F-2575, UNLESS NOTED OTHERWISE
2. ALL ELEVATIONS ARE REFERRED TO MEAN SEA LEVEL, 1929 ADJUSTMENT.
3. COORDINATES ARE BASED ON PLANT BASE LINE SYSTEM, BASE LINE "A" & "B".
4. BACKGROUND GRID IS BASED ON KENTUCKY STATE PLANE COORDINATE SYSTEM, SOUTH ZONE.
5. ALL FILL AND CUT SLOPES AND BOTTOM AND SIDE SLOPES OF DRAINAGE DITCHES SHALL BE PROVIDED WITH A COVER OF 4 (FOUR) INCHES SEEDED TOPSOIL.
6. ALL ELEVATIONS SHOWN FOR BERM, DIKES, GRADING & DITCHES ARE FINISHED GRADE ELEVATIONS.

LEGEND

1	NEW PIPE, SEE DETAIL (C-6)
2	NEW DITCH
3	EXISTING DITCH
4	EXISTING PIPE
5	EXISTING PIPE TO BE PLUGGED
6	NEW CULVERT
7	EXISTING CULVERT

REFERENCE DRAWINGS

C-2	PLANT AND SWITCHYARD AREA - PLAN
S-416	FLOW MEASUREMENT STRUCTURE

ANY MODIFICATION OR ADDITION TO THIS DRAWING BY AN ORGANIZATION OTHER THAN SARGENT & LUNDY IS NOT THE RESPONSIBILITY OF SARGENT & LUNDY

REVISIONS

Rev.	Drawn Date:	Drawn By:	Revision Made
A	02/01/77		GENERAL WORK BIDS
B	04/08/77		FOR CONSTR
C	05/17/06		CAD REV

Title
GENERAL SITE PLAN - WATER POLLUTION CONTROL FACILITIES

Location and Unit:
Green River Common

Scale: 1"=100'
Drawn: THOMAS M. BARRY
Date: 04/08/77
Checked: 03/15/77
Approved: JM MCLAUGHLIN

JOB NO. 4975-00 | JOB NO. | JOB NO. | JOB NO.

Drawing No: GR-C-00001
Rev.: C

Kentucky Utilities Company
an E·ON company

BMS Version 2.0

US EPA ARCHIVE DOCUMENT

NOTES

1. FOR GENERAL NOTES, SEE DWG. C-1.
2. ——— ——— ——— INDICATES FRENCH DRAIN
3. ALL PERFORATED CORRUGATED METAL PIPES SHALL BE OF 16 GAGE AND SHALL HAVE CORRUGATIONS OF 1 1/2" PITCH X 1/4" DEEP ARMCO HEL-COR PIPE OR EQUAL.

REFERENCE DRAWINGS

C-1	GENERAL SITE PLAN
C-4	SWITCHYARD AREA SECTIONS & DETAILS
S-415	OIL SEPARATOR

REVISIONS

Rev.	Drawn Date:	Drawn By:	Revision Made
A	02/01/77		GENERAL CORR. BIDS
B	04/08/77		FOR CONSTR
C	05/04/77		ADDED C.B. #23 & DETAILS AREA FRENCH DRAIN, RAMPS, CULVERTS & VALVE
D	05/12/77		REMOVED HOLD ON RAMP, ADDED C.B. #24 & DETAIL FIELD
E	06/03/77		
F	05/17/06	HRT	CAD REV

Title

PLANT & SWITCHYARD AREA PLAN – WATER POLLUTION CONTROL FACILITIES

Location and Unit:
Green River Common

Scale: 1"=50'
Drawn: THOMAS M. BAILEY
Date: 04/08/77
Checked: 04/08/77
Approved: JM MCCAUBREYN

Kentucky Utilities Company
an E·ON company

JOB NO.	JOB NO.	JOB NO.	JOB NO.	JOB NO.
4975-00				

Drawing No: GR-C-00002
Rev: F

ANY MODIFICATION OR ADDITION TO THIS DRAWING BY AN ORGANIZATION OTHER THAN SARGENT & LUNDY IS NOT THE RESPONSIBILITY OF SARGENT & LUNDY.

US EPA ARCHIVE DOCUMENT

GR-S-00416

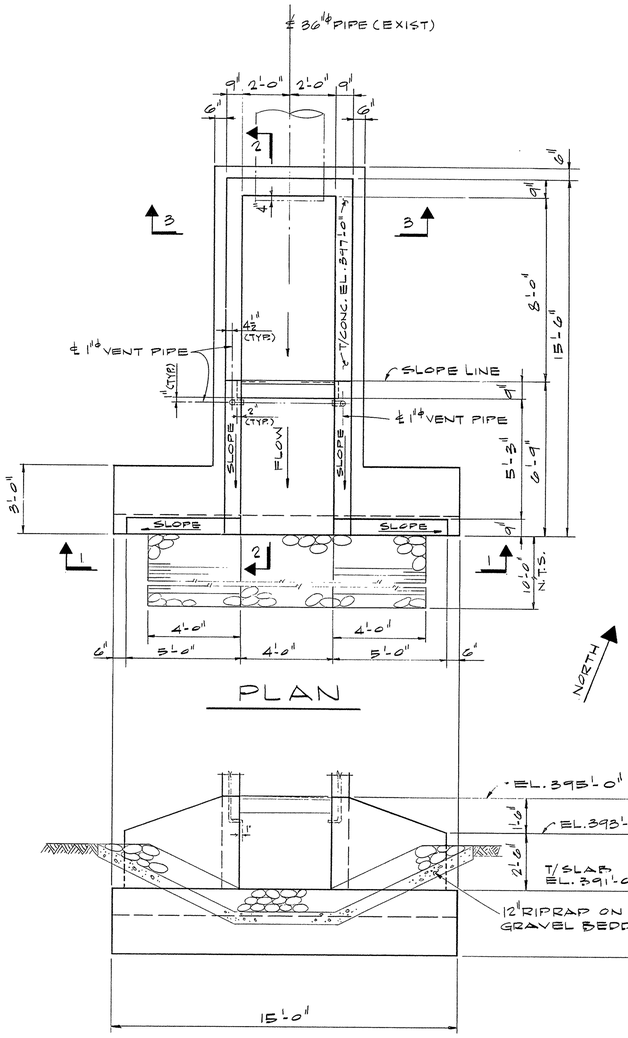

PLAN

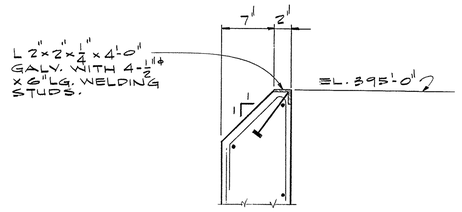

DETAIL A

SCALE: 1 1/2" = 1'-0"

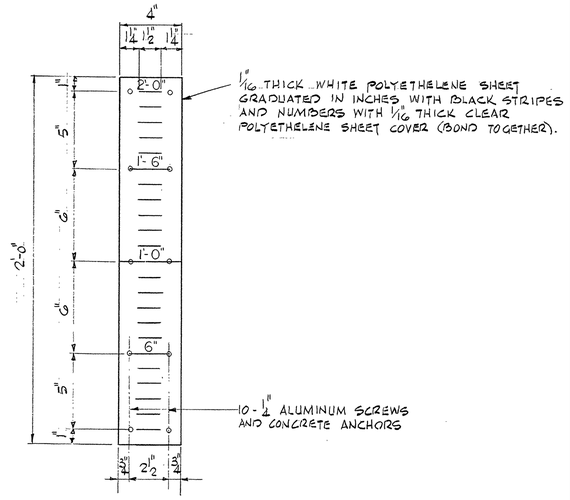

DETAIL - B

SCALE 3" = 1'-0"

ELEVATION 1

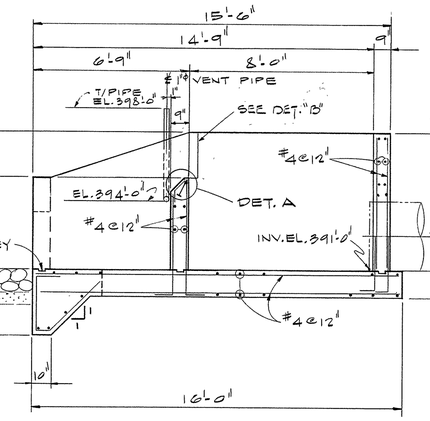

SECTION 2

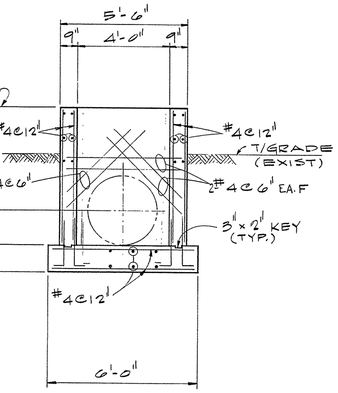

SECTION 3

STATE OF KENTUCKY
J. M. McLAUGHLIN
9039
REGISTERED PROFESSIONAL ENGINEER

NOTES

1. ALL EXPOSED CONCR. EDGES SHALL HAVE 1" CHAMFER

ANY MODIFICATION OR ADDITION TO THIS DRAWING BY AN ORGANIZATION OTHER THAN SARGENT & LUNDY IS NOT THE RESPONSIBILITY OF SARGENT & LUNDY.

REFERENCE DRAWINGS

C-1 GENERAL SITE PLAN

REINFORCING LAP LENGTH AND ANCHORAGE SCHEDULE A GRADE 60 STEEL

3500 P.S.I. CONCRETE

BAR SIZE	LAP SPLICE LENGTH TOP BARS	LAP SPLICE LENGTH OTHER BARS	ANCHOR LENGTH TOP BARS	ANCHOR LENGTH OTHER BARS
# 4	1'-11"	1'-5"	1'-2"	1'-0"
# 5	2'-5"	1'-9"	1'-5"	1'-0"
# 6	2'-10"	2'-1"	1'-9"	1'-2"
# 7	3'-11"	2'-10"	2'-4"	1'-8"
# 8	5'-2"	3'-8"	3'-0"	2'-2"

REVISIONS

Rev.	Drawn Date:	Drawn By:	Revision Made
A	02/01/77	MP	GENERAL WORK BID
B	05/17/77		FOR CONSTR
C	05/19/06	HRT	CAD REV.

Title: FLOW MEASUREMENT STRUCTURE - PLAN & SECTIONS - WATER POLLUTION CONTROL FACILITIES

Location and Unit: Green River Common

Scale: 3/8"=1' UNLESS NOTED
Drawn:
Date: 02/01/77
Checked:
Approved:

JOB NO. 4975 | JOB NO. | JOB NO. | JOB NO.

Kentucky Utilities Company
an LG&E company

Drawing No: GR-S-00416
Rev.: C

DMS Version 2.0

US EPA ARCHIVE DOCUMENT

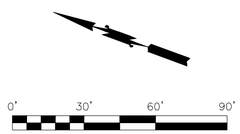

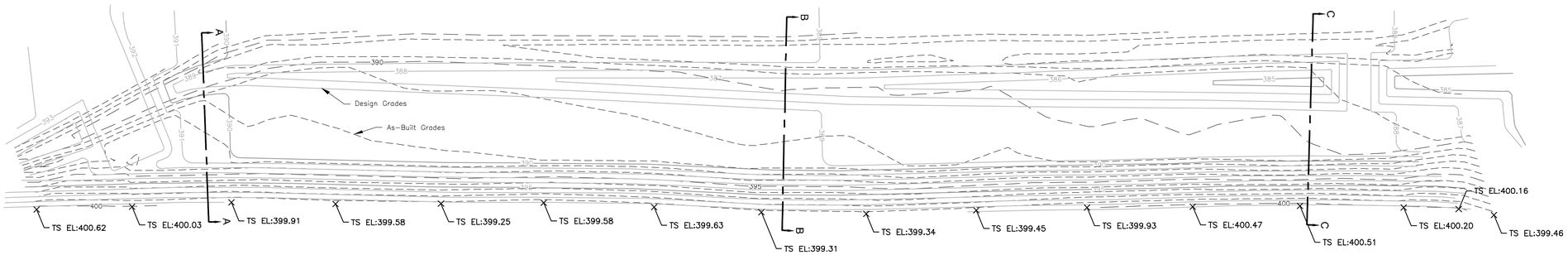

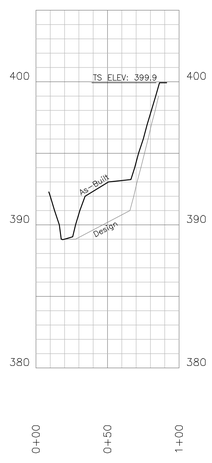

CROSS SECTION A-A
Horz: 1" = 50'
Vert: 1" = 5'

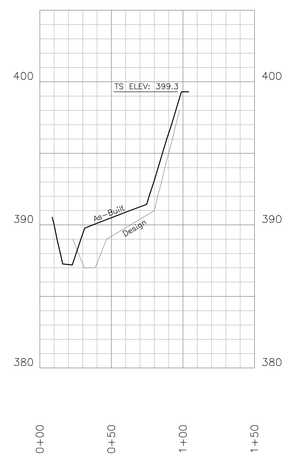

CROSS SECTION B-B
Horz: 1" = 50'
Vert: 1" = 5'

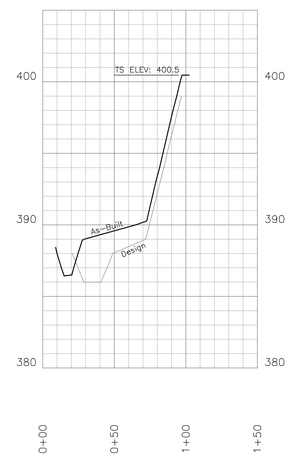

CROSS SECTION C-C
Horz: 1" = 50'
Vert: 1" = 5'

ASSOCIATED ENGINEERS, INC.
ENGINEERS • GEOLOGISTS • SURVEYORS
2120 Fairfax Trail • Owensboro, Kentucky 42301 | 1700 Ashley Circle • Bowling Green, KY 42101
Phone: (270) 926-7776 • Fax: (270) 926-7779 | Phone: (270) 842-8430 • Fax: (270) 842-8445
www.associatedengineers.com

JOB NO.	09-0364G
DRAWN BY	P.B.
CHECKED BY	G.W.E.
DATE	09/15/2010

EON U.S. GREEN RIVER STATION
SOUTH CARROLTON, KY
NUMBER 2 POND SLOPE ARMORING AND DITCH RELOCATION

AS-BUILT

SHEET NUMBER

1

US EPA ARCHIVE DOCUMENT

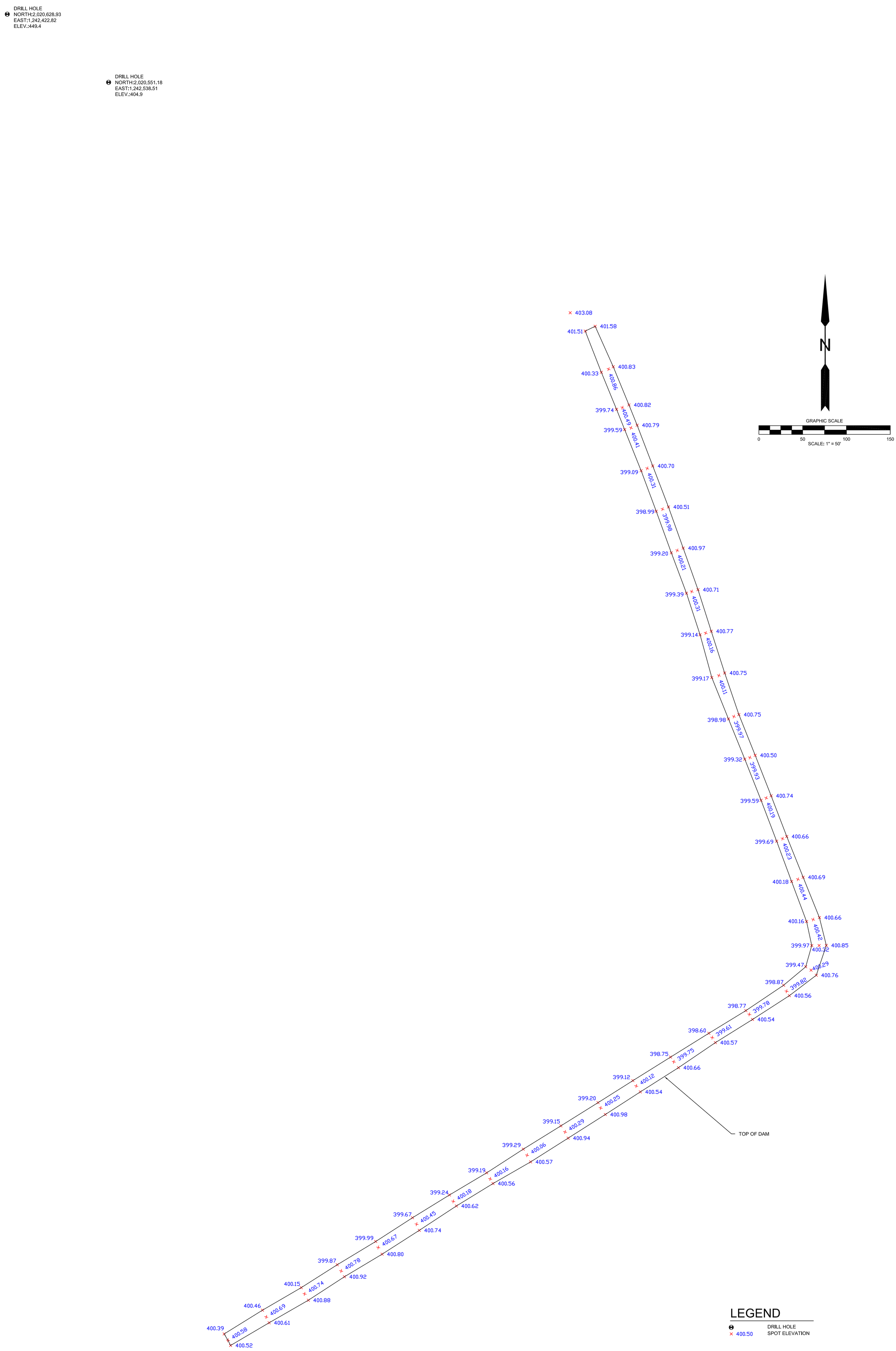

LEGEND

	DRILL HOLE
× 400.50	SPOT ELEVATION

KENTUCKY UTILITIES
GREEN RIVER POWER PLANT
MUHLENBERG COUNTY, KENTUCKY
"AS BUILT" # 2 POND EMBANKMENT
DATE: 07-12-11

PREPARED BY:
ASSOCIATED ENGINEERS, INC.
ENGINEERS • GEOLOGISTS • SURVEYORS
2740 N. MAIN STREET
MADISONVILLE, KY 42431
PH (270) 821-7732 • FAX (270) 821-7789
1001 FREDERICA ST. STE. 200
OWENSBORO, KY 42301
PH (270) 684-8450 • FAX (270) 684-8449
WWW.ASSOCIATEDENGINEERS.COM

US EPA ARCHIVE DOCUMENT

Appendix C: Storage & Spillway Rating Curves

US EPA ARCHIVE DOCUMENT

Ash Treatment Basin #1: Stage-Storage Curve

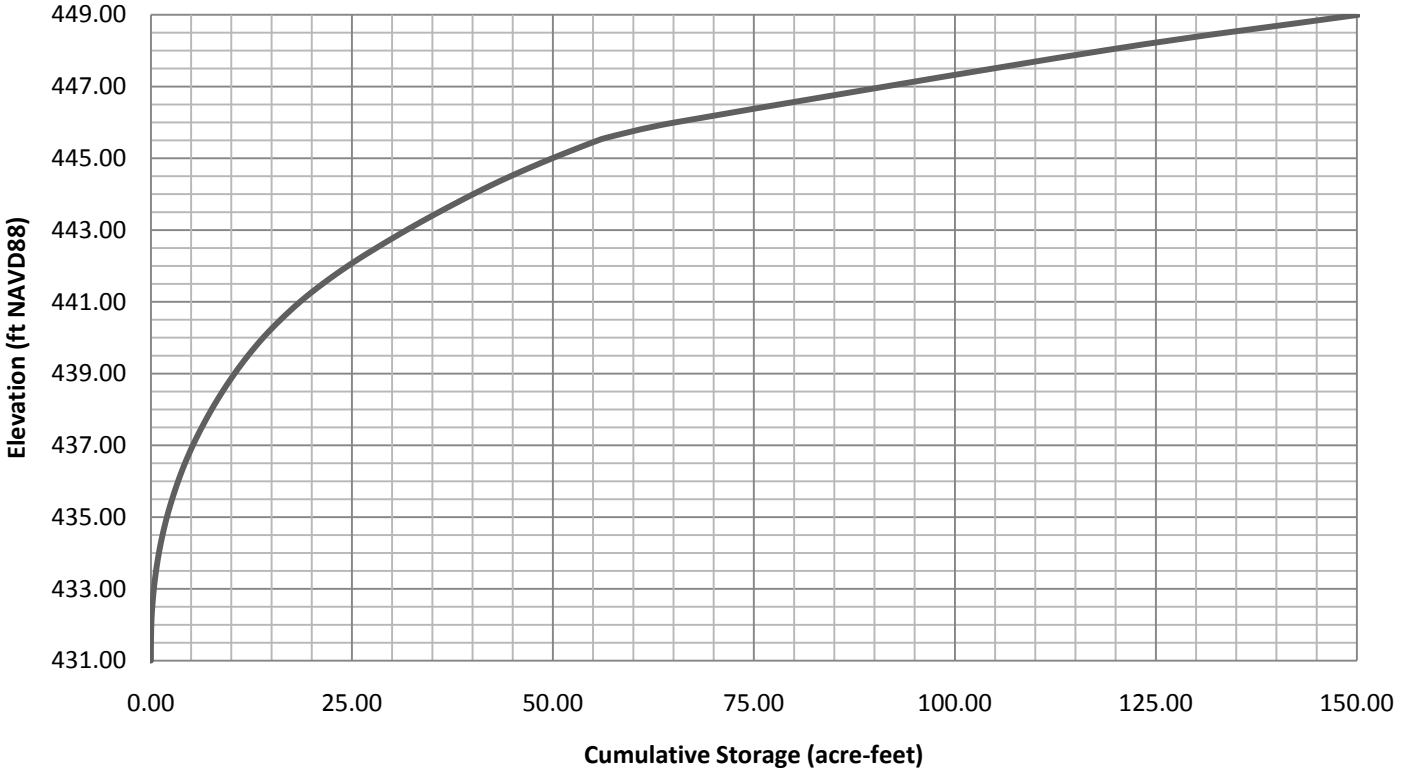

Ash Treatment Basin #1: Stage-Discharge Curve

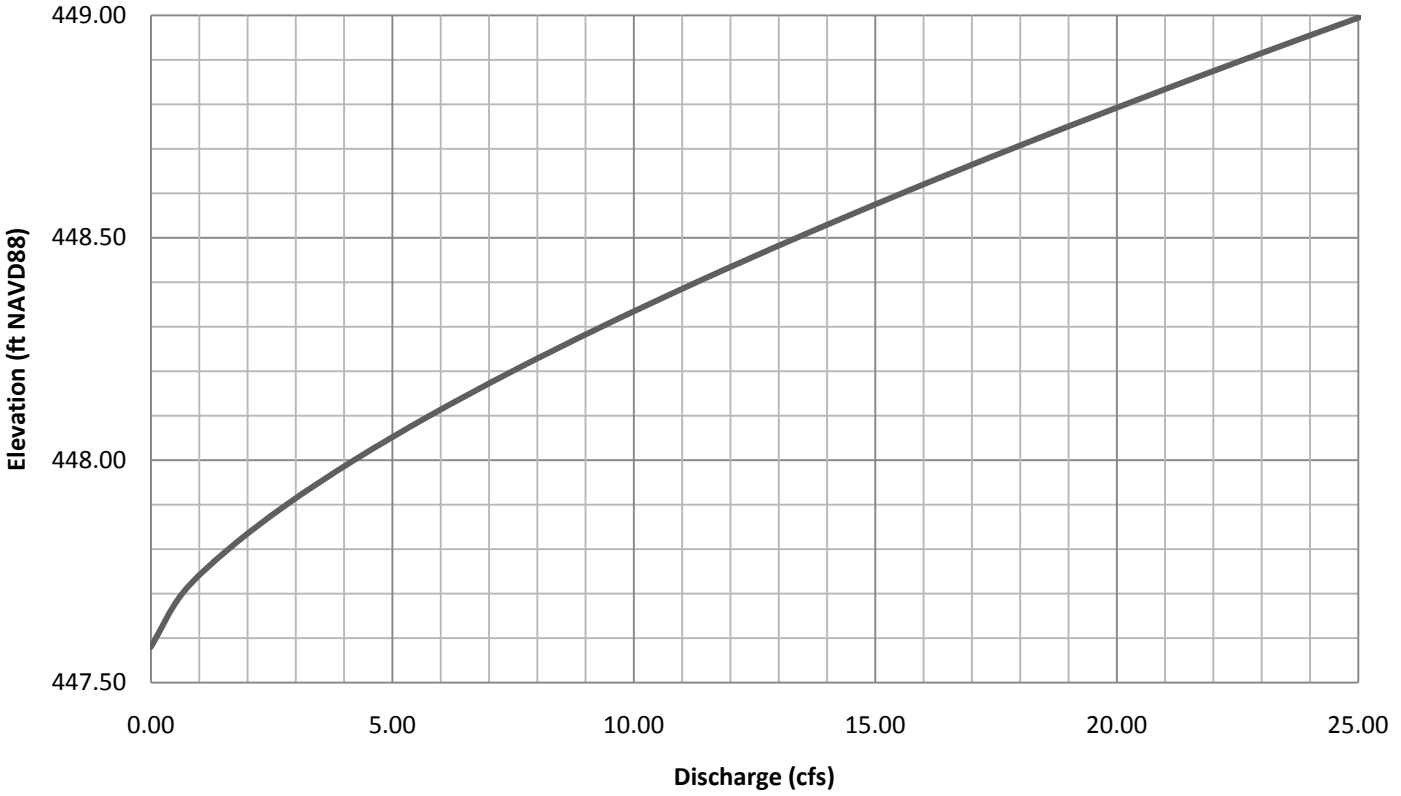

US EPA ARCHIVE DOCUMENT

Ash Treatment Basin #2: Stage-Storage Curve

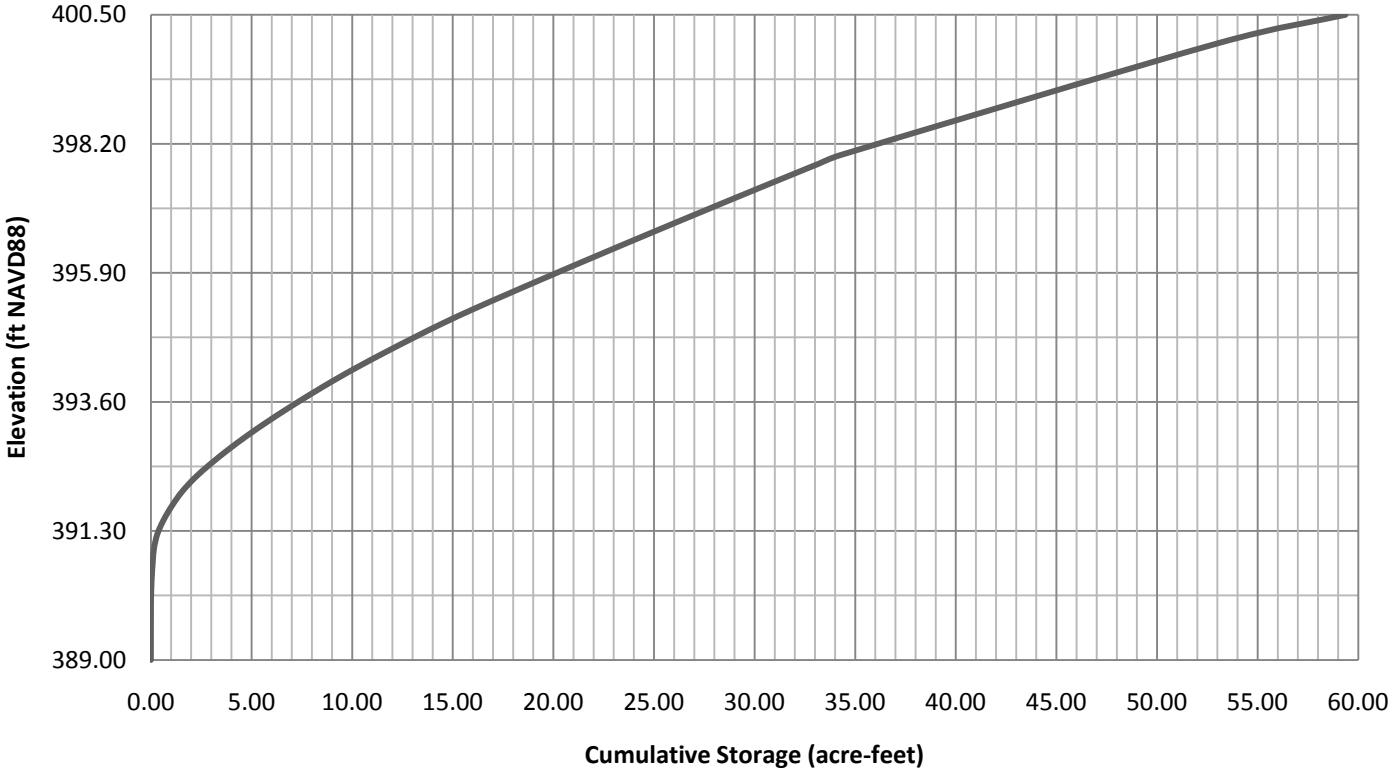

Ash Treatment Basin #2: Stage-Discharge Curve

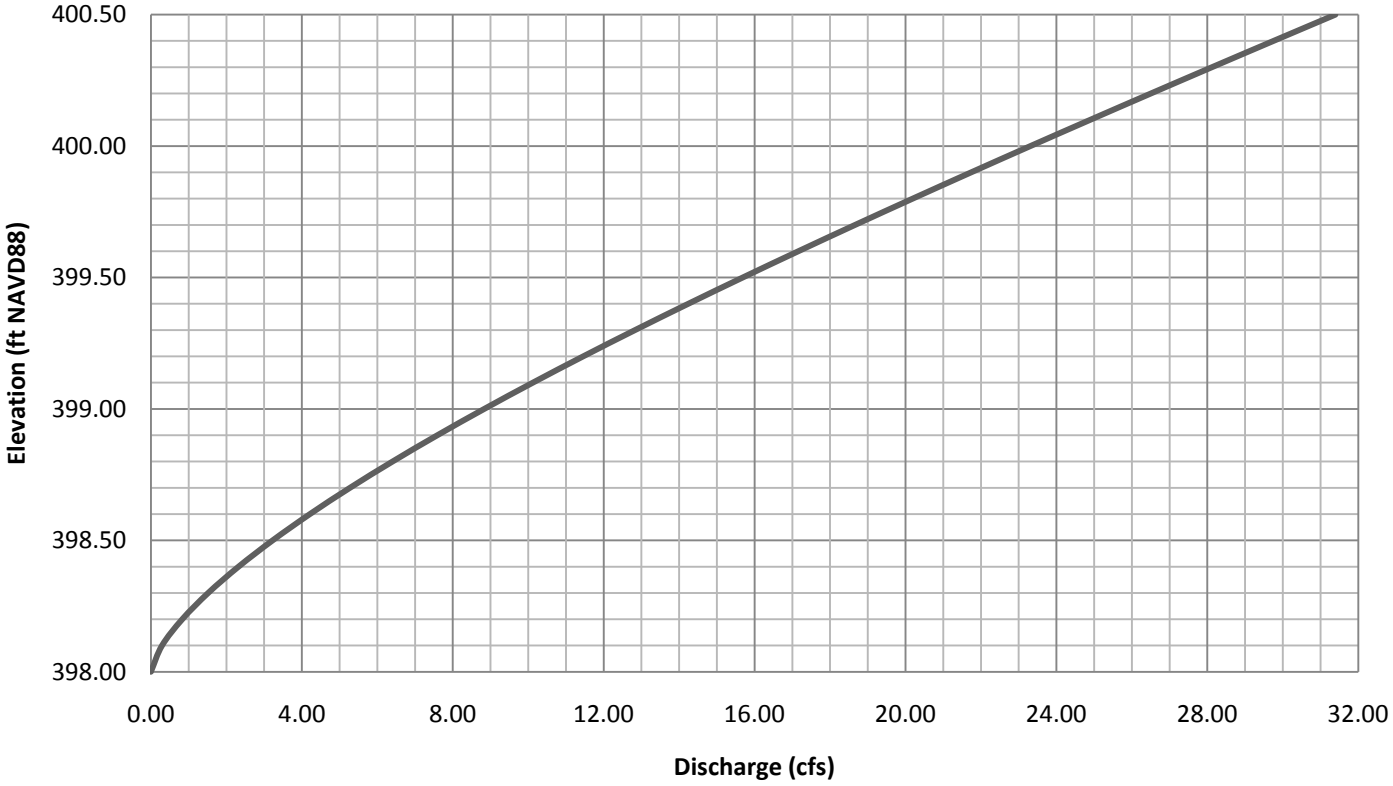

US EPA ARCHIVE DOCUMENT

Scrubber Pond: Stage-Storage Curve

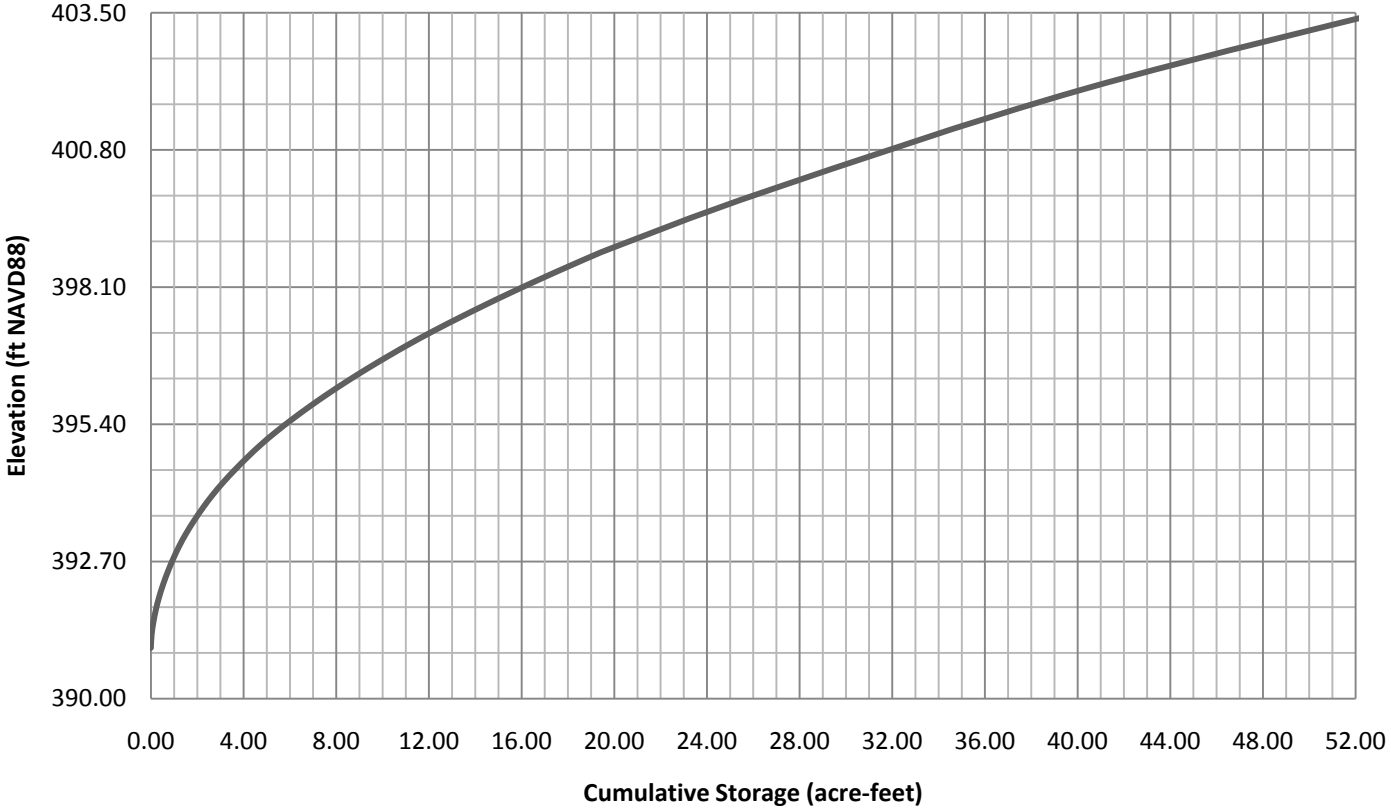

Scrubber Pond: High-Head Pump Performance Curve

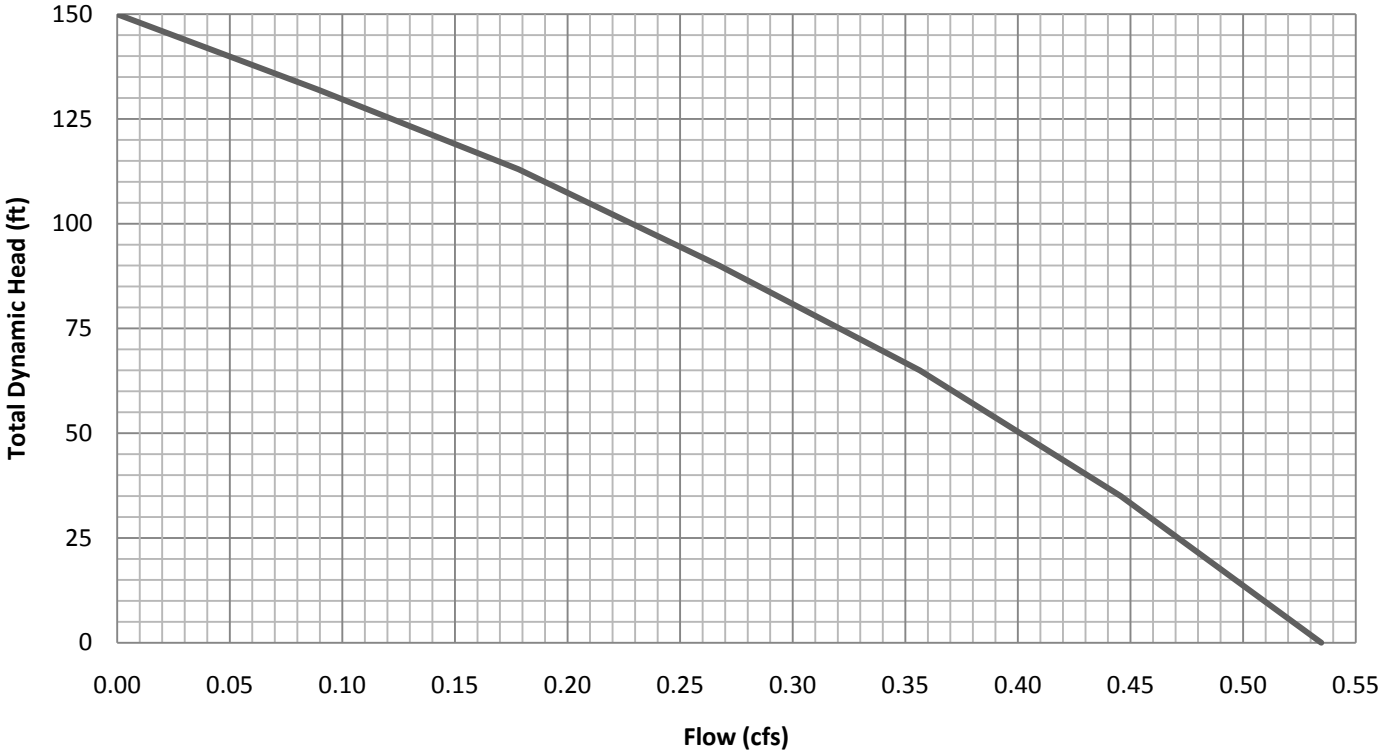

US EPA ARCHIVE DOCUMENT

Coal Pile Runoff Pond: Stage-Storage Curve

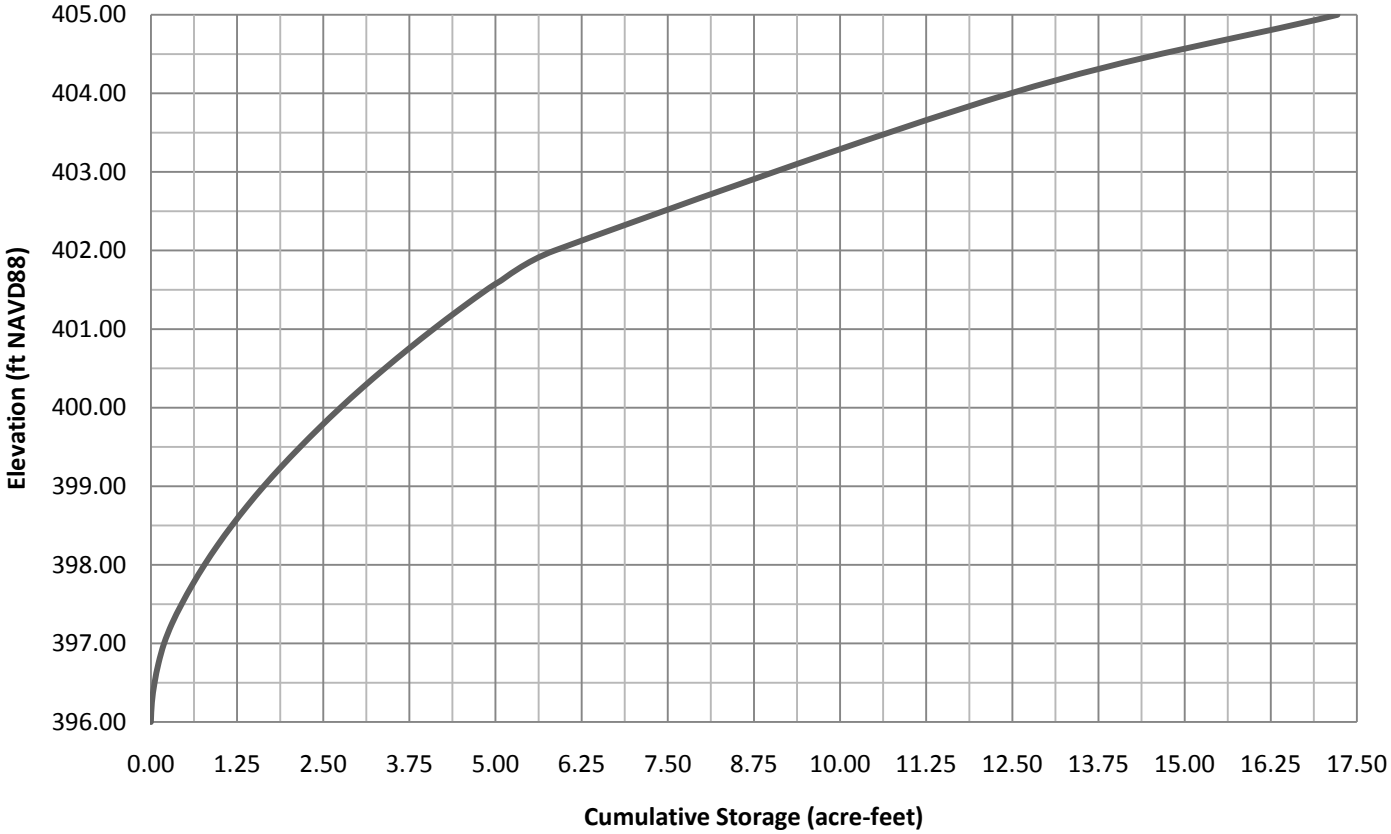

Coal Pile Runoff Pond: Stage-Discharge Curve

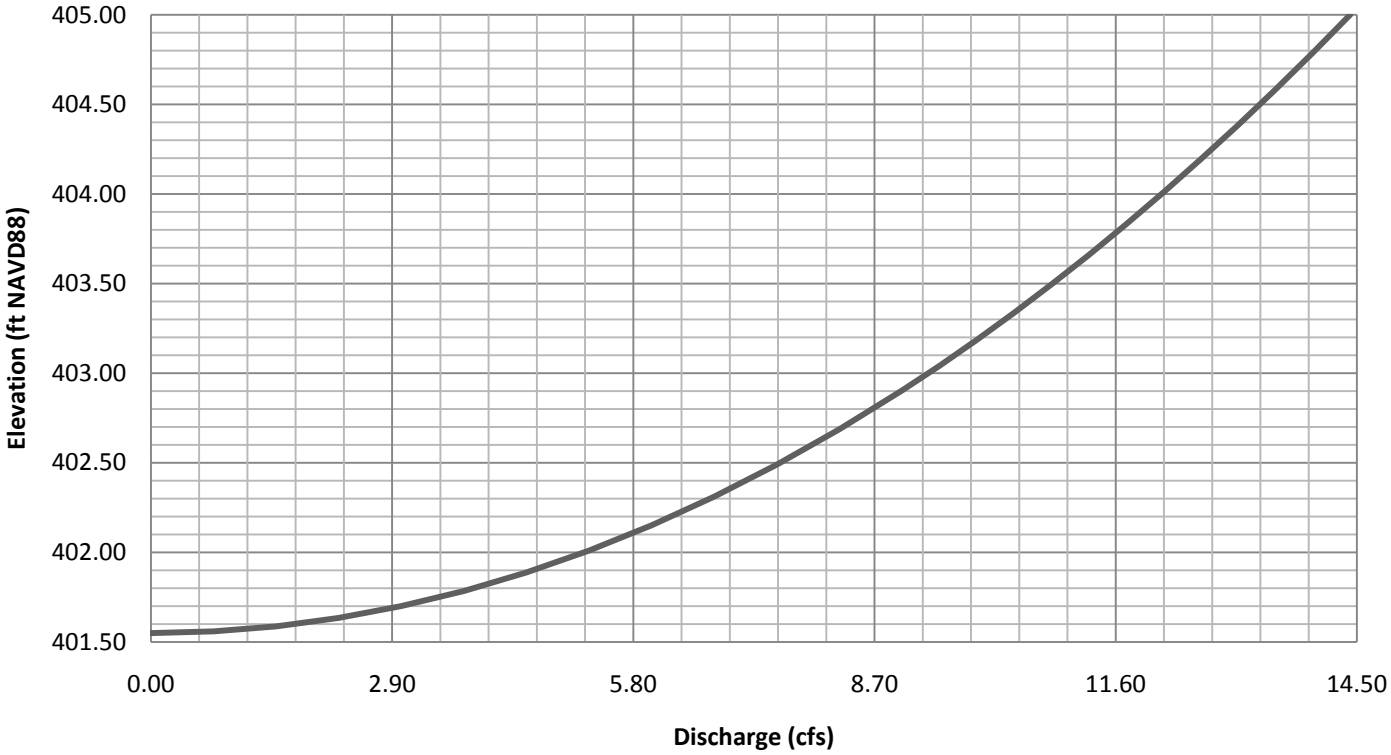

Ash Treatment Basin #1: Operational Stage-Discharge Curve

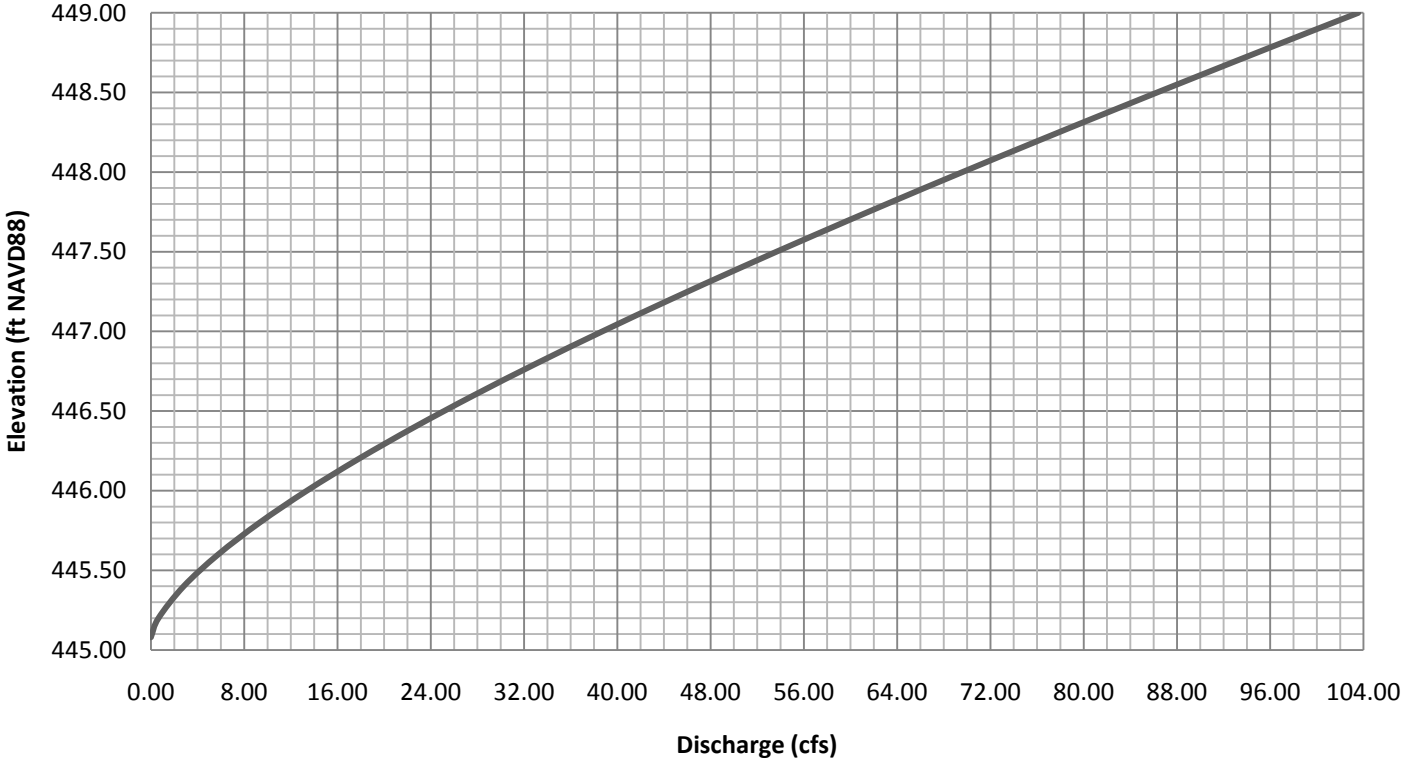

Ash Treatment Basin #2: Operational Stage-Discharge Curve

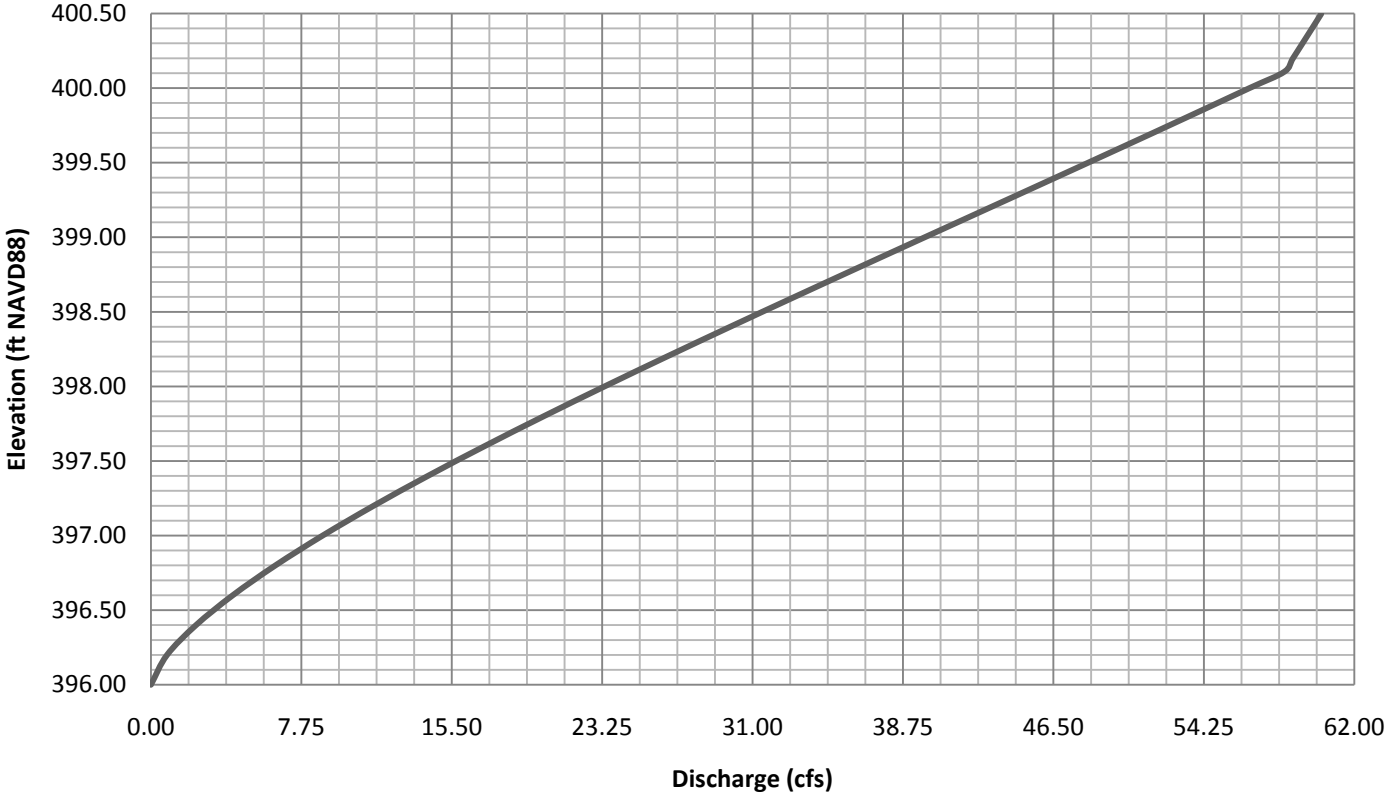

US EPA ARCHIVE DOCUMENT

US EPA ARCHIVE DOCUMENT

Appendix D: SITES Software Analysis

US EPA ARCHIVE DOCUMENT

SITES Software Analysis of KU Green River Station Ponds

The KU Green River Station Ponds were also modeled using the SITES 2005.1.5 program developed jointly by the Natural Resources Conservation Service (NRCS), the Agricultural Research Service (ARS), and Kansas State University. The SITES model was created to verify the results received from the HEC-HMS analysis for the emergency spillway hydrograph and freeboard hydrograph.

Parameters used within the SITES analysis are described on pages 2-7 of this report. Discharge rating curves were automatically developed within the SITES program for Ash Treatment Basin #1 and Ash Treatment Basin #2 principal spillways. Discharge rating curves were inputted manually into the program for the Coal Pile Runoff Pond spillway and Scrubber Pond pumps (Appendix C). Table 6 shows a summary of the modeling results. See Appendix H for complete SITES analyses output.

Table 6. Summary of SITES 2005.1.5 Analysis

Emergency Spillway Hydrograph				
	ATB1	Coal Pile Runoff	Scrubber	ATB2
Starting Pool (feet)*	447.6	404.0	402.5	398.0
Peak Inflow (cfs)	127.0	49.5	28.2	79.3
Peak Outflow (cfs)	11.8	12.6	1.1	22.8
Peak Elevation (feet)*	448.4	404.2	402.9	399.8
Freeboard (feet)	0.6	0.8	0.6	0.7
Freeboard Hydrograph				
	ATB1	Coal Pile Runoff	Scrubber	ATB2
Starting Pool (feet)*	447.6	404.0	402.5	398.0
Peak Inflow (cfs)	247.1	93.8	49.6	148.6
Peak Outflow (cfs)	20.2	14.0	1.1	35.6
Peak Elevation (feet)*	448.8	404.8	403.1	400.5
Freeboard (feet)	0.2	0.2	0.4	0.0

*Elevations listed reference NAVD88.

The SITES analysis results did not reveal any significant differences from the HEC-RAS analysis. Differences in the peak elevations noted in Table 4 and Table 7 were expected and are attributed to slight discrepancies between SITES' development of rating curves and the engineer's development of rating curves for HEC-HMS as well as differences in how baseflow is handled in each modeling program. However, both the HEC-HMS and SITES analyses indicate that KU Green River Station Ponds meet capacity requirements set forth by KDOW for Class A dams. Based upon this result, recommendations remain the same for KU Green River Station Ponds and are outlined on page 9 of this report and in Appendix E.

US EPA ARCHIVE DOCUMENT

Appendix E: Hydraulic Operation Guidelines

US EPA ARCHIVE DOCUMENT

Guidelines for the Hydraulic Operation of KU Green River Station Ponds

The following guidelines are recommended to ensure the continued successful operation of the KU Green River Station Ponds. All recommended actions set forth in this report must be approved by plant management prior to implementation and should only be performed by qualified individuals assigned by plant management.

In order to continually meet hydraulic standards set forth by KDOW for Class A dams and structures in series with those dams, KU Green River Station pond levels and/or weir elevations should not exceed the Maximum Operating Elevations listed in Table 7 during normal daily operation.

During the occurrence of large rainfall events, pond levels should be closely monitored by qualified individuals. In the event that a pond level reaches a corresponding Immediate Action Pool Elevation listed in Table 7 during a large rainfall, it is recommended that plant management take immediate action to increase pond storage. Possible methods to increase pond storage during a major rainfall event include:

- Lowering stop-log elevations at Ash Treatment Basin #1 and/or Ash Treatment Basin #2
- Temporarily reducing or stopping CCR flows to Ash Treatment Basin #1
- Temporarily reducing or stopping wastewater flows to the Coal Pile Runoff Pond
- Installing temporary pump stations on one or more ponds to divert flows to Green River
- Other actions as directed by a qualified professional engineer

After it has been determined that the rainfall event has concluded and that all ponds have drawn down to a least the Maximum Operating Elevations listed in Table 7, KU Green River Station Ponds may adjust back to normal configuration and return to normal operation.

Table 7. KU Green River Operational & Emergency Pond Level Targets

Basin Name	Maximum Operating Elevation (ft NAVD88)	Immediate Action Pool Elevation (ft NAVD88)
Ash Treatment Basin #1	447.6*	448.5
Coal Pile Runoff Pond	404.0	404.5
Scrubber Pond	402.5	403.0
Ash Treatment Basin #2	398.0*	400.0

*Elevation denotes weir elevation at top of stop log unit with all stop logs in place.

US EPA ARCHIVE DOCUMENT

Appendix F: Continuous Monitoring Instrumentation

Continuous Monitoring Instrumentation for KU Green River Station Ponds

For the purpose of continuously monitoring pond levels and select discharge flows, the following measurement instrumentation will be installed on KU Green River Station Ponds and the Green River at KU Green River Station in 2011:

Ash Treatment Basin #1	• Guided Wave Radar instruments for the automatic and continuous measurement of pond level elevation and discharge flow • Wireless adapters for the transmission of recorded measurements
Coal Pile Runoff Pond	• Guided Wave Radar instrument for the automatic and continuous measurement of pond level elevation • Wireless adapter for the transmission of recorded measurements
Scrubber Pond	• Guided Wave Radar instrument for the automatic and continuous measurement of pond level elevation • Wireless adapter for the transmission of recorded measurements
Ash Treatment Basin #2	• Guided Wave Radar instruments for the automatic and continuous measurement of pond level elevation and discharge flow • Wireless adapters for the transmission of recorded measurements
Green River	• Non-Contact Radar instrument for the automatic and continuous measurement of river level elevation • Wireless adapter for the transmission of recorded measurements

In addition, an automated rain gauge with a wireless adapter will be installed at KU Green River Station to collect and wirelessly transmit precipitation measurements. A wireless gateway, or host device, will be installed at the site to collect all wirelessly transmitted data and, in turn, will transfer collected data to the generating station's operational historian. Appendix I contains technical information on the equipment to be installed.

Once measurement data is historicized within the generating station's network, authorized personnel will have the ability to view pond levels, discharge flows, and precipitation values in real-time or may trend data measurements over specified time periods. A typical screen for viewing pond levels and discharges is shown in Figure 1. Note that values shown in Figure 1 were derived from USGS gage data and engineer measurements and were only used to illustrate how instrumentation measurements will be visualized.

US EPA ARCHIVE DOCUMENT

Figure 1. Instrumentation Data Screen of Green River Levels

US EPA ARCHIVE DOCUMENT

US EPA ARCHIVE DOCUMENT

Appendix G: HEC-HMS Output

Project: GRHH Simulation Run: Emergency Spillway

Start of Run: 01Jan2000, 00:00 Basin Model: Green River Station - FU
End of Run: 05Jan2000, 00:00 Meteorologic Model: NRCS 6-Hr
Compute Time: 14Jul2011, 12:17:30 Control Specifications: NRCS 6-Hr

Hydrologic Element	Drainage Area (MI2)	Peak Discharge (CFS)	Time of Peak	Volume (IN)
SB-ATB1	0.100	116.3	01Jan2000, 02:41	8.94
ATB1	0.100	6.0	01Jan2000, 06:43	6.63
SB-ATB2	0.062	52.4	01Jan2000, 02:46	2.37
SB-CPP	0.019	30.8	01Jan2000, 02:31	13.19
SB-N	0.008	7.7	01Jan2000, 02:34	2.05
N	0.008	6.7	01Jan2000, 02:38	2.04
SB-S	0.004	6.5	01Jan2000, 02:31	3.28
S	0.012	10.2	01Jan2000, 02:40	2.46
CPP	0.031	12.0	01Jan2000, 03:45	13.55
SB-SP	0.016	24.7	01Jan2000, 02:35	3.48
SP	0.016	1.0	01Jan2000, 06:21	9.74
ATB2	0.209	15.5	01Jan2000, 10:06	6.04

US EPA ARCHIVE DOCUMENT

Project: GRHH

Simulation Run: Emergency Spillway Subbasin: SB-ATB1

Start of Run:	01Jan2000, 00:00	Basin Model:	Green River Station - FULL
End of Run:	05Jan2000, 00:00	Meteorologic Model:	NRCS 6-Hr
Compute Time:	14Jul2011, 12:17:30	Control Specifications:	NRCS 6-Hr

Volume Units: IN

Computed Results

Peak Discharge :	116.3 (CFS)	Date/Time of Peak Discharge :	01Jan2000, 02:41
Total Precipitation :	4.80 (IN)	Total Direct Runoff :	2.81 (IN)
Total Loss :	1.99 (IN)	Total Baseflow :	6.13 (IN)
Total Excess :	2.81 (IN)	Discharge :	8.94 (IN)

US EPA ARCHIVE DOCUMENT

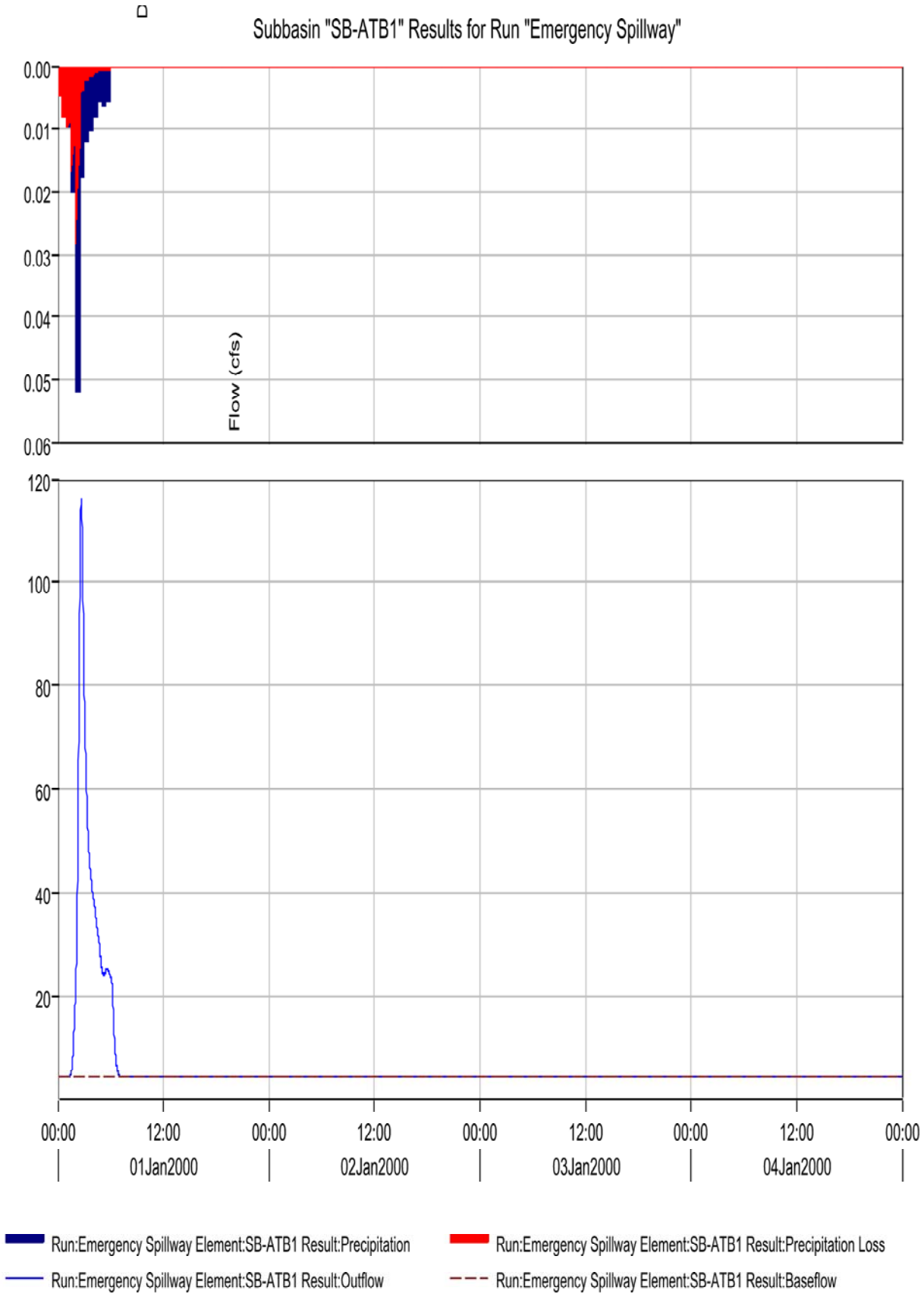

US EPA ARCHIVE DOCUMENT

Project: GRHH

Simulation Run: Emergency Spillway Reservoir: ATB1

Start of Run:	01Jan2000, 00:00	Basin Model:	Green River Station - FULL
End of Run:	05Jan2000, 00:00	Meteorologic Model:	NRCS 6-Hr
Compute Time:	14Jul2011, 12:17:30	Control Specifications:	NRCS 6-Hr

Volume Units: IN

Computed Results

Peak Inflow :	116.3 (CFS)	Date/Time of Peak Inflow :	01Jan2000, 02:41
Peak Outflow :	6.0 (CFS)	Date/Time of Peak Outflow :	01Jan2000, 06:43
Total Inflow :	8.94 (IN)	Peak Storage :	15.8 (AC-FT)
Total Outflow :	6.63 (IN)	Peak Elevation :	448.1 (FT)

US EPA ARCHIVE DOCUMENT

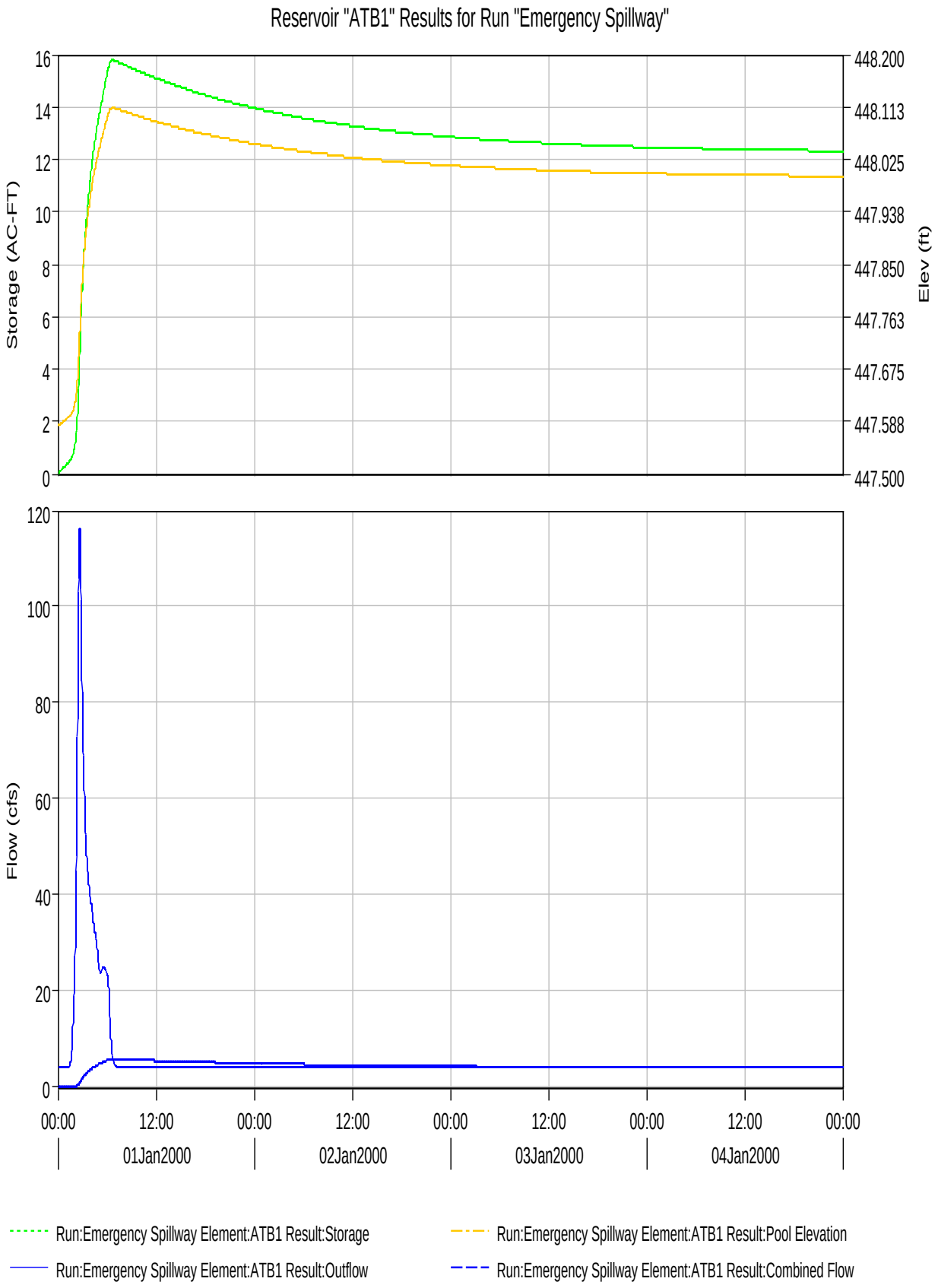

US EPA ARCHIVE DOCUMENT

Project: GRHH

Simulation Run: Emergency Spillway Subbasin: SB-CPP

Start of Run:	01Jan2000, 00:00	Basin Model:	Green River Station - FULL
End of Run:	05Jan2000, 00:00	Meteorologic Model:	NRCS 6-Hr
Compute Time:	14Jul2011, 12:17:30	Control Specifications:	NRCS 6-Hr

Volume Units: IN

Computed Results

Peak Discharge :	30.8 (CFS)	Date/Time of Peak Discharge :	01Jan2000, 02:31
Total Precipitation :	4.80 (IN)	Total Direct Runoff :	3.09 (IN)
Total Loss :	1.71 (IN)	Total Baseflow :	10.10 (IN)
Total Excess :	3.09 (IN)	Discharge :	13.19 (IN)

US EPA ARCHIVE DOCUMENT

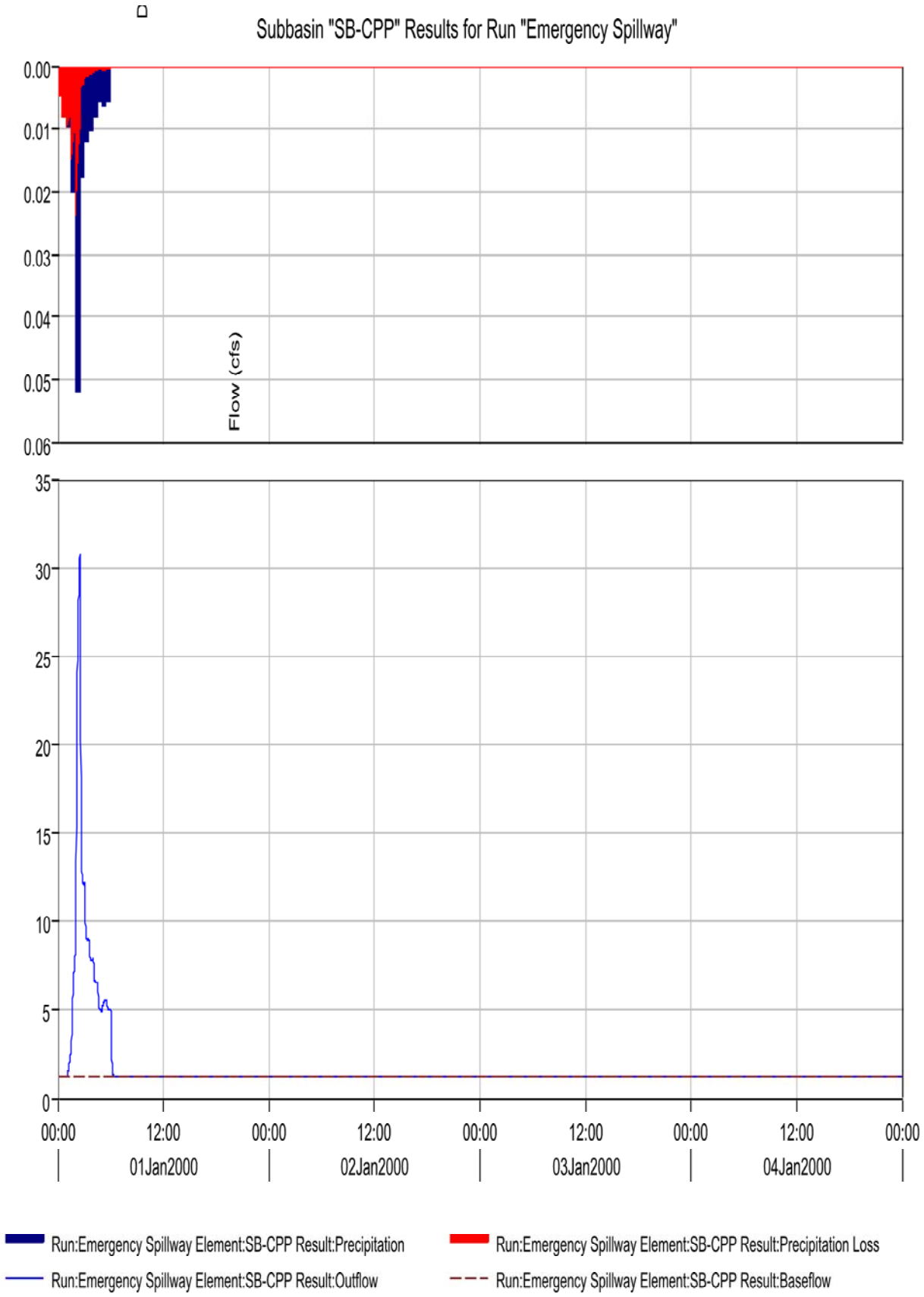

US EPA ARCHIVE DOCUMENT

Project: GRHH

Simulation Run: Emergency Spillway Reservoir: CPP

Start of Run:	01Jan2000, 00:00	Basin Model:	Green River Station - FULL
End of Run:	05Jan2000, 00:00	Meteorologic Model:	NRCS 6-Hr
Compute Time:	14Jul2011, 12:17:30	Control Specifications:	NRCS 6-Hr

Volume Units: IN

Computed Results

Peak Inflow :	40.0 (CFS)	Date/Time of Peak Inflow :	01Jan2000, 02:31
Peak Outflow :	12.0 (CFS)	Date/Time of Peak Outflow :	01Jan2000, 03:45
Total Inflow :	9.03 (IN)	Peak Storage :	12.3 (AC-FT)
Total Outflow :	13.55 (IN)	Peak Elevation :	404.0 (FT)

US EPA ARCHIVE DOCUMENT

US EPA ARCHIVE DOCUMENT

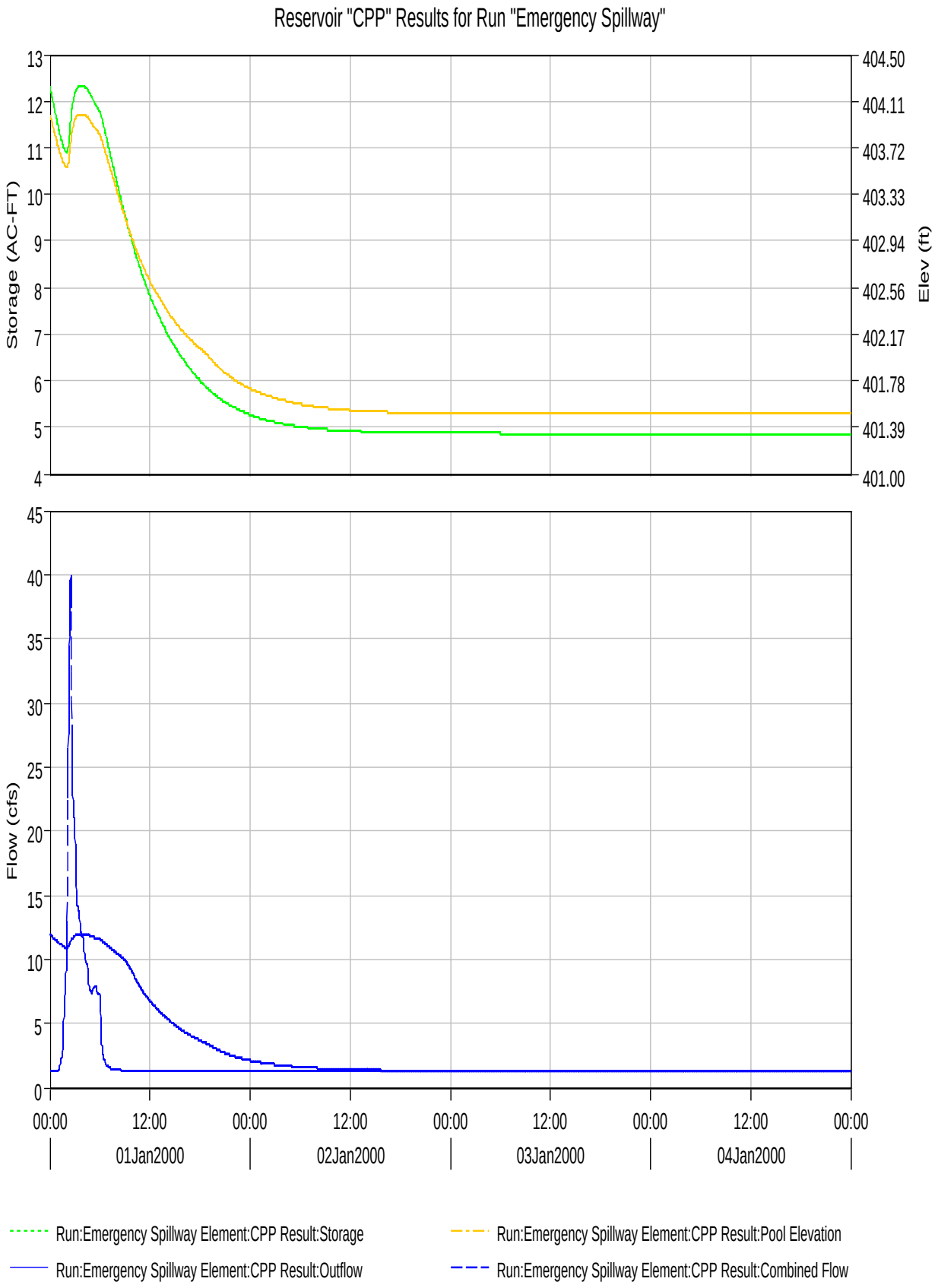

Project: GRHH

Simulation Run: Emergency Spillway Subbasin: SB-SP

Start of Run:	01Jan2000, 00:00	Basin Model:	Green River Station - FULL
End of Run:	05Jan2000, 00:00	Meteorologic Model:	NRCS 6-Hr
Compute Time:	14Jul2011, 12:17:30	Control Specifications:	NRCS 6-Hr

Volume Units: IN

Computed Results

Peak Discharge :	24.7 (CFS)	Date/Time of Peak Discharge :	01Jan2000, 02:35
Total Precipitation :	4.80 (IN)	Total Direct Runoff :	3.48 (IN)
Total Loss :	1.32 (IN)	Total Baseflow :	0.00 (IN)
Total Excess :	3.48 (IN)	Discharge :	3.48 (IN)

US EPA ARCHIVE DOCUMENT

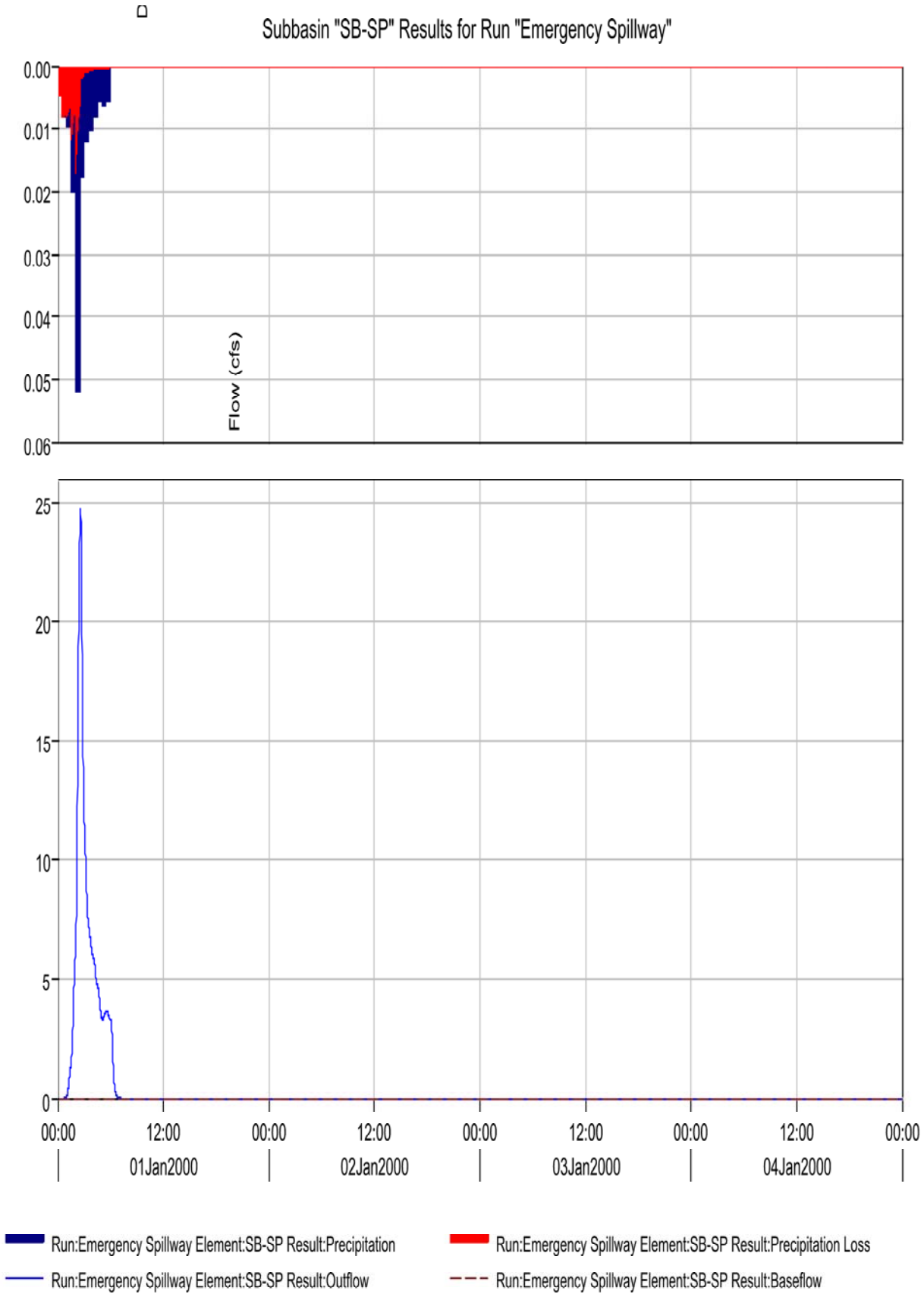

US EPA ARCHIVE DOCUMENT

Project: GRHH

Simulation Run: Emergency Spillway Reservoir: SP

Start of Run:	01Jan2000, 00:00	Basin Model:	Green River Station - FULL
End of Run:	05Jan2000, 00:00	Meteorologic Model:	NRCS 6-Hr
Compute Time:	14Jul2011, 12:17:30	Control Specifications:	NRCS 6-Hr

Volume Units: IN

Computed Results

Peak Inflow :	24.7 (CFS)	Date/Time of Peak Inflow :	01Jan2000, 02:35
Peak Outflow :	1.0 (CFS)	Date/Time of Peak Outflow :	01Jan2000, 06:21
Total Inflow :	3.48 (IN)	Peak Storage :	46.9 (AC-FT)
Total Outflow :	9.74 (IN)	Peak Elevation :	402.8 (FT)

US EPA ARCHIVE DOCUMENT

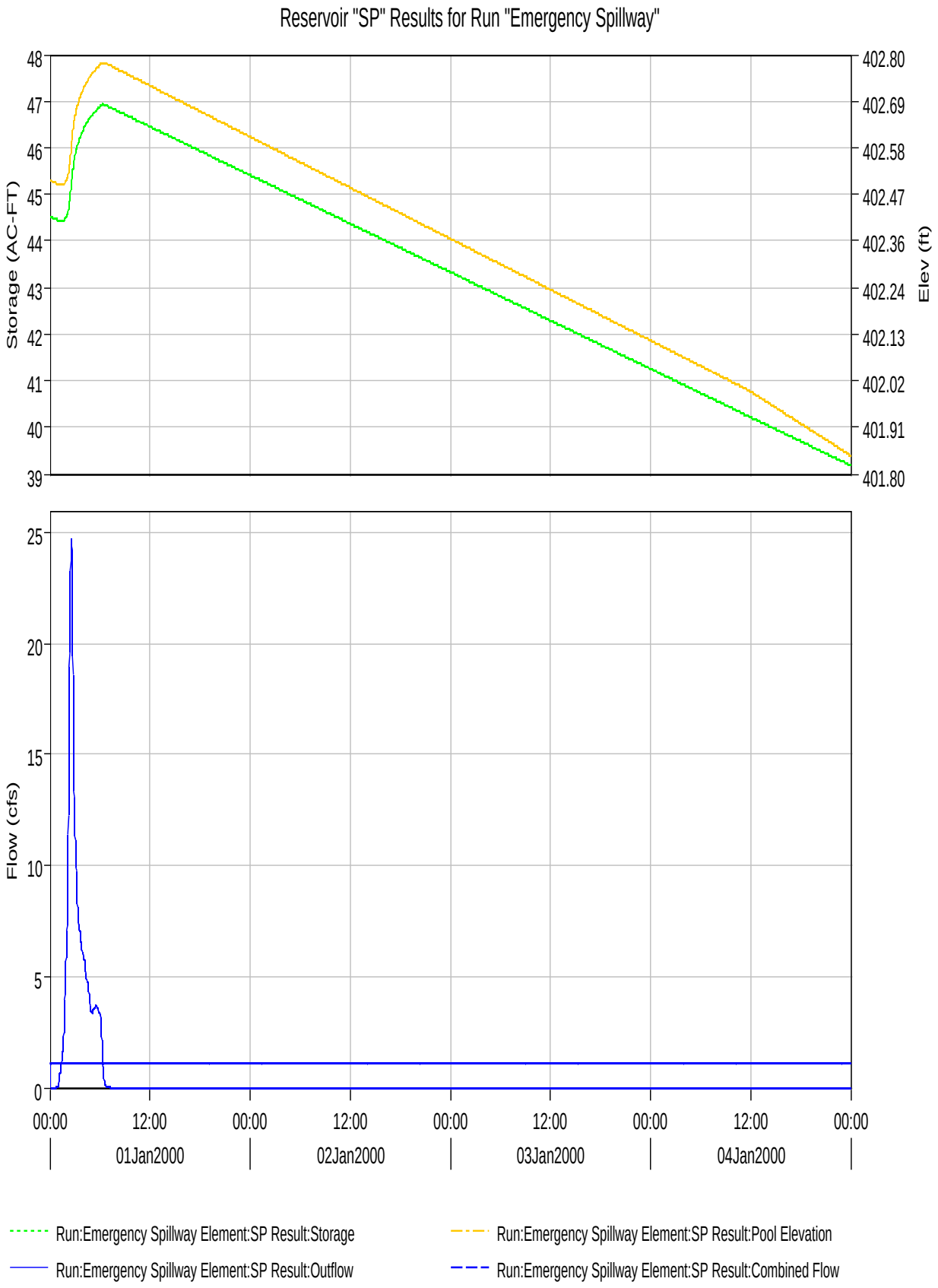

US EPA ARCHIVE DOCUMENT

Project: GRHH

Simulation Run: Emergency Spillway Subbasin: SB-ATB2

Start of Run:	01Jan2000, 00:00	Basin Model:	Green River Station - FULL
End of Run:	05Jan2000, 00:00	Meteorologic Model:	NRCS 6-Hr
Compute Time:	14Jul2011, 12:17:30	Control Specifications:	NRCS 6-Hr

Volume Units: IN

Computed Results

Peak Discharge :	52.4 (CFS)	Date/Time of Peak Discharge :	01Jan2000, 02:46
Total Precipitation :	4.80 (IN)	Total Direct Runoff :	2.37 (IN)
Total Loss :	2.43 (IN)	Total Baseflow :	0.00 (IN)
Total Excess :	2.37 (IN)	Discharge :	2.37 (IN)

US EPA ARCHIVE DOCUMENT

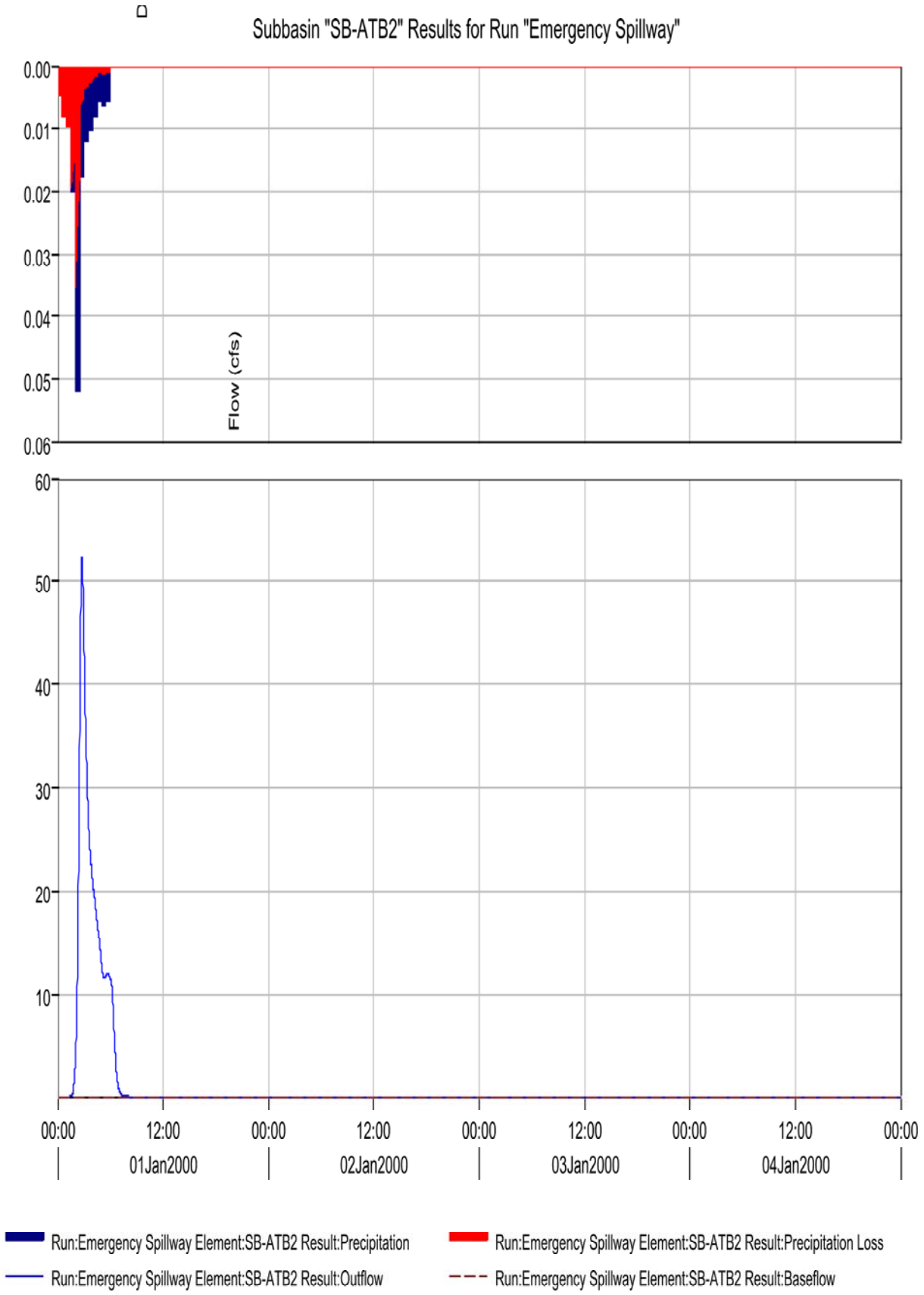

US EPA ARCHIVE DOCUMENT

Project: GRHH

Simulation Run: Emergency Spillway Reservoir: ATB2

Start of Run:	01Jan2000, 00:00	Basin Model:	Green River Station - FULL
End of Run:	05Jan2000, 00:00	Meteorologic Model:	NRCS 6-Hr
Compute Time:	14Jul2011, 12:17:30	Control Specifications:	NRCS 6-Hr

Volume Units: IN

Computed Results

Peak Inflow :	66.4 (CFS)	Date/Time of Peak Inflow :	01Jan2000, 02:46
Peak Outflow :	15.5 (CFS)	Date/Time of Peak Outflow :	01Jan2000, 10:06
Total Inflow :	6.63 (IN)	Peak Storage :	13.1 (AC-FT)
Total Outflow :	6.04 (IN)	Peak Elevation :	399.5 (FT)

US EPA ARCHIVE DOCUMENT

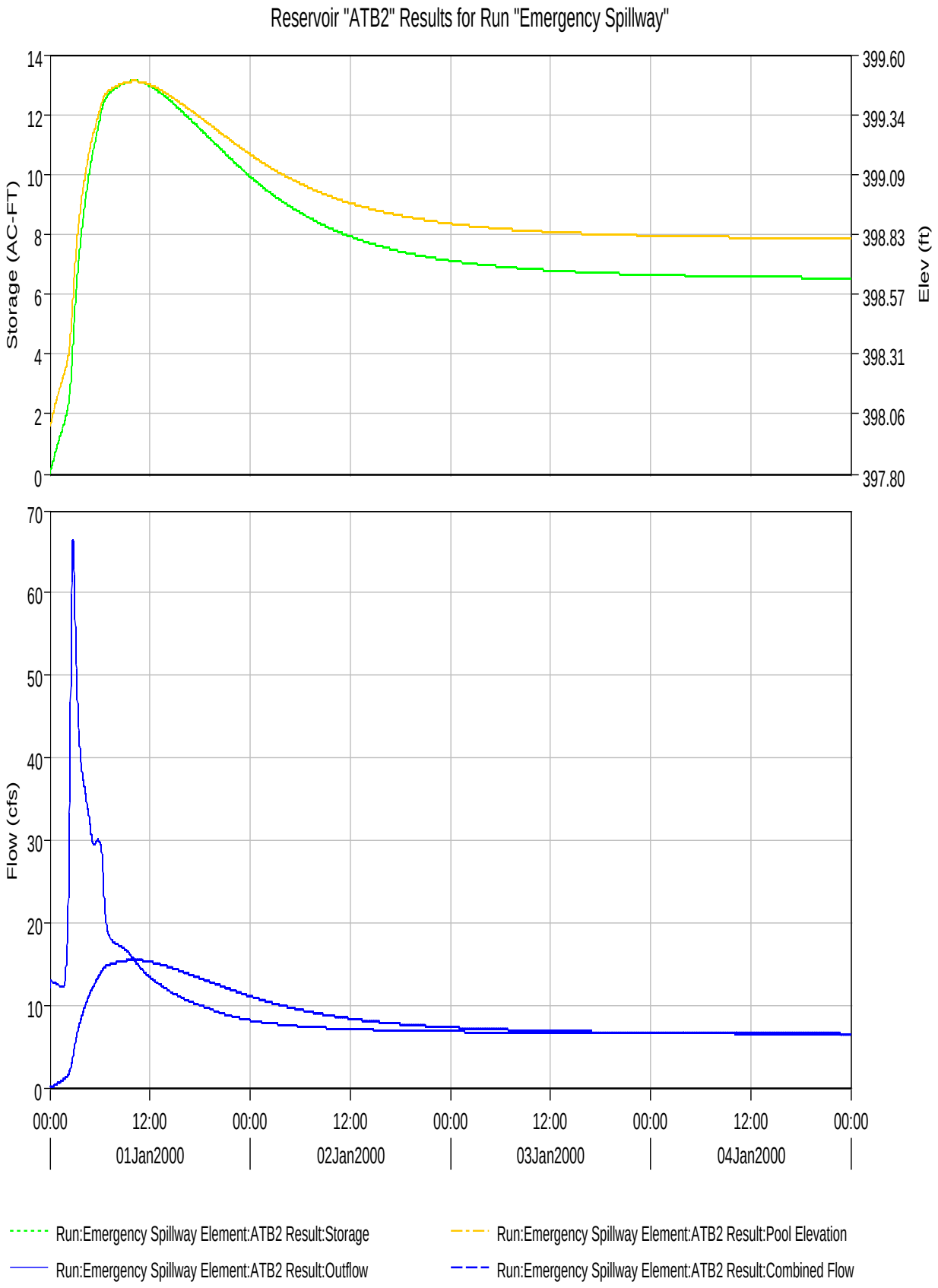

US EPA ARCHIVE DOCUMENT

Project: GRHH Simulation Run: Freeboard

Start of Run: 01Jan2000, 00:00 Basin Model: Green River Station - FU
End of Run: 05Jan2000, 00:00 Meteorologic Model: NRCS 6-Hr
Compute Time: 14Jul2011, 10:35:30 Control Specifications: NRCS 6-Hr

Hydrologic Element	Drainage Area (MI2)	Peak Discharge (CFS)	Time of Peak	Volume (IN)
SB-ATB1	0.100	224.3	01Jan2000, 02:40	11.55
ATB1	0.100	13.3	01Jan2000, 06:30	9.20
SB-ATB2	0.062	112.1	01Jan2000, 02:44	4.85
SB-CPP	0.019	54.8	01Jan2000, 02:30	15.87
SB-N	0.008	16.9	01Jan2000, 02:33	4.40
N	0.008	11.8	01Jan2000, 02:42	4.40
SB-S	0.004	11.5	01Jan2000, 02:30	6.00
S	0.012	14.9	01Jan2000, 02:58	4.93
CPP	0.031	13.5	01Jan2000, 04:38	16.15
SB-SP	0.016	43.7	01Jan2000, 02:34	6.24
SP	0.016	1.1	01Jan2000, 06:25	9.75
ATB2	0.209	25.7	01Jan2000, 08:43	8.38

US EPA ARCHIVE DOCUMENT

Project: GRHH

Simulation Run: Freeboard Subbasin: SB-ATB1

Start of Run:	01Jan2000, 00:00	Basin Model:	Green River Station - FULL
End of Run:	05Jan2000, 00:00	Meteorologic Model:	NRCS 6-Hr
Compute Time:	14Jul2011, 10:35:30	Control Specifications:	NRCS 6-Hr

Volume Units: IN

Computed Results

Peak Discharge :	224.3 (CFS)	Date/Time of Peak Discharge :	01Jan2000, 02:40
Total Precipitation :	7.66 (IN)	Total Direct Runoff :	5.42 (IN)
Total Loss :	2.24 (IN)	Total Baseflow :	6.13 (IN)
Total Excess :	5.42 (IN)	Discharge :	11.55 (IN)

US EPA ARCHIVE DOCUMENT

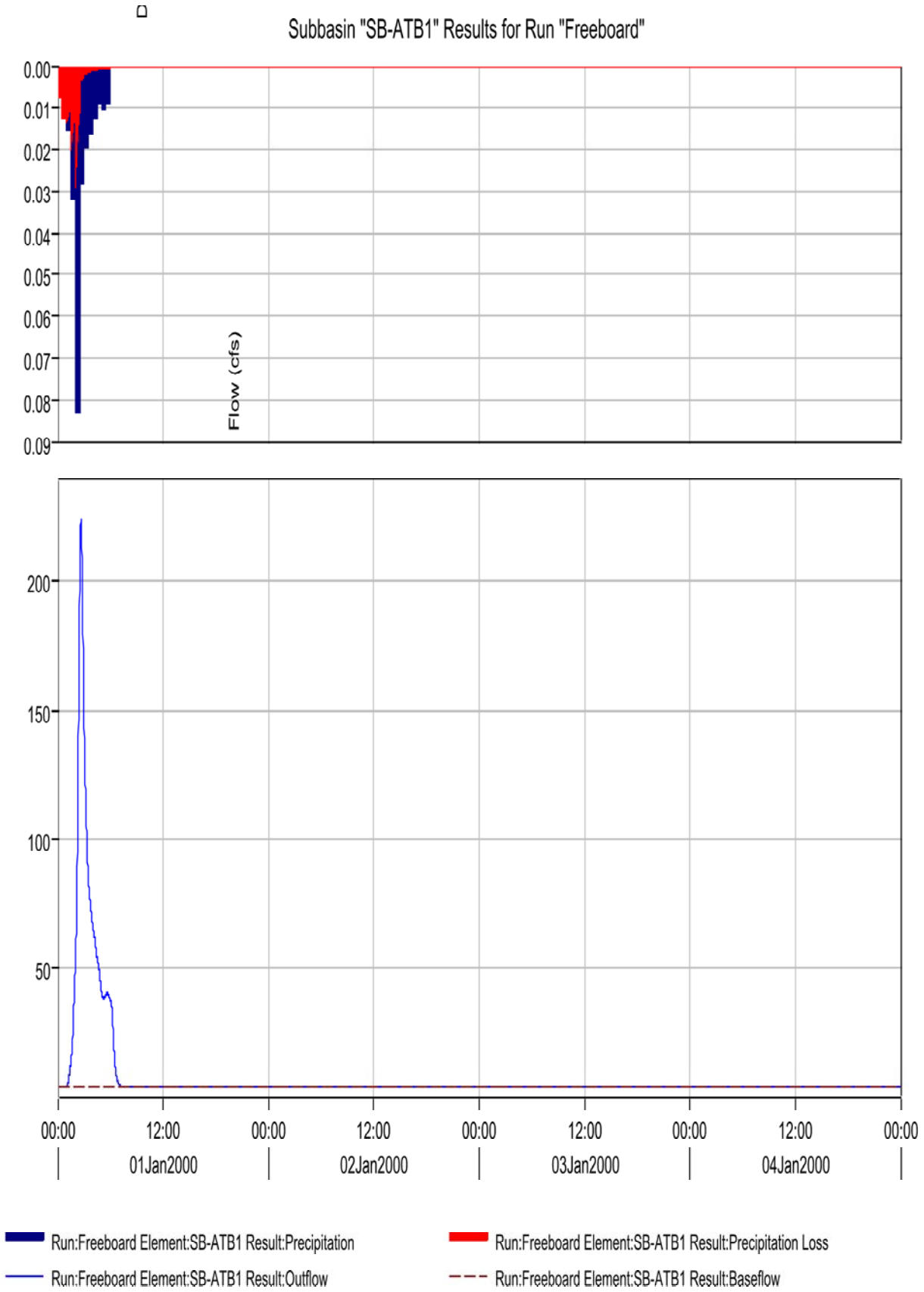

US EPA ARCHIVE DOCUMENT

Project: GRHH

Simulation Run: Freeboard Reservoir: ATB1

Start of Run:	01Jan2000, 00:00	Basin Model:	Green River Station - FULL
End of Run:	05Jan2000, 00:00	Meteorologic Model:	NRCS 6-Hr
Compute Time:	14Jul2011, 10:35:30	Control Specifications:	NRCS 6-Hr

Volume Units: IN

Computed Results

Peak Inflow :	224.3 (CFS)	Date/Time of Peak Inflow :	01Jan2000, 02:40
Peak Outflow :	13.3 (CFS)	Date/Time of Peak Outflow :	01Jan2000, 06:30
Total Inflow :	11.55 (IN)	Peak Storage :	27.8 (AC-FT)
Total Outflow :	9.20 (IN)	Peak Elevation :	448.5 (FT)

US EPA ARCHIVE DOCUMENT

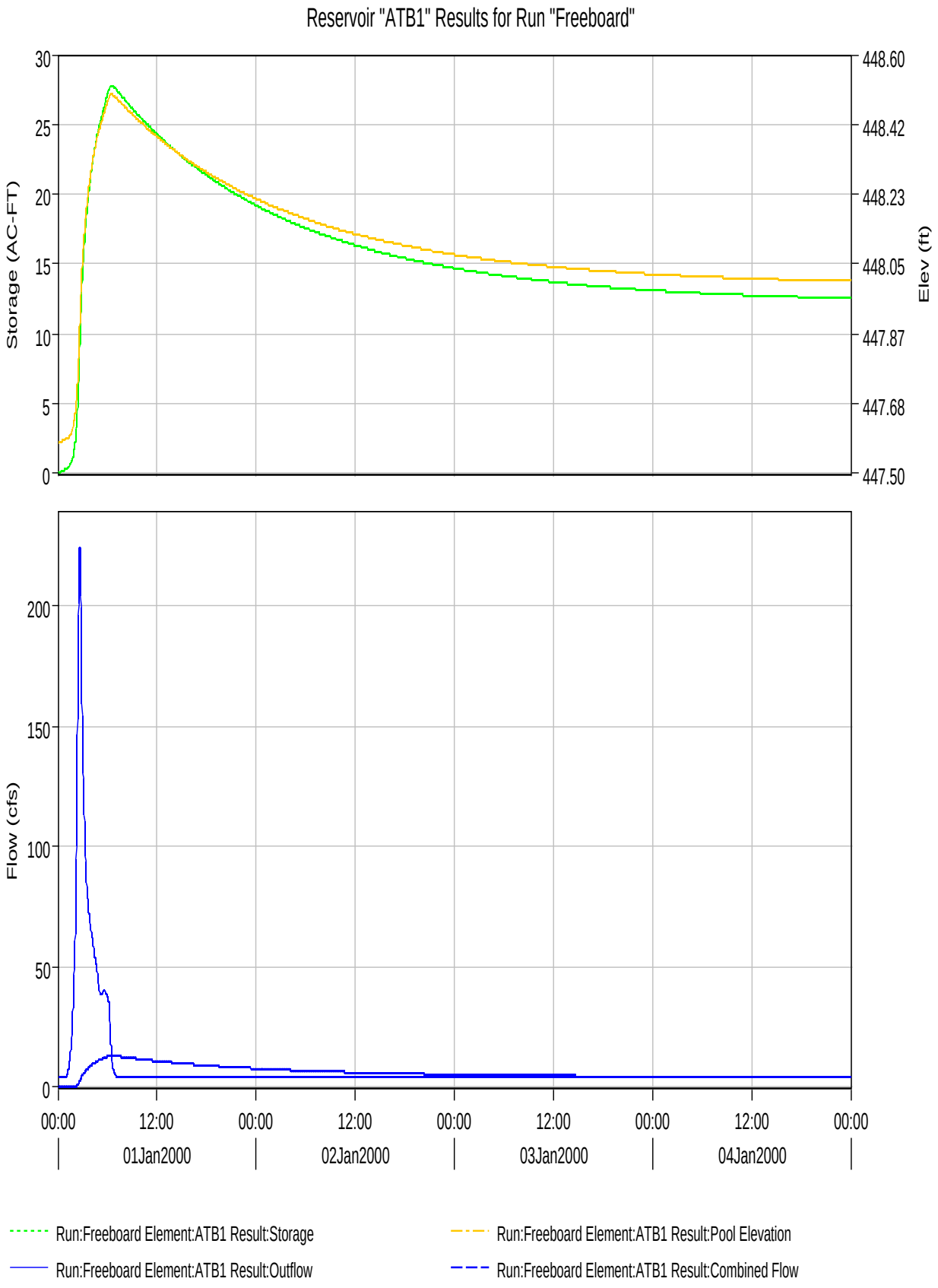

US EPA ARCHIVE DOCUMENT

Project: GRHH

Simulation Run: Freeboard Subbasin: SB-CPP

Start of Run:	01Jan2000, 00:00	Basin Model:	Green River Station - FULL
End of Run:	05Jan2000, 00:00	Meteorologic Model:	NRCS 6-Hr
Compute Time:	14Jul2011, 10:35:30	Control Specifications:	NRCS 6-Hr

Volume Units: IN

Computed Results

Peak Discharge :	54.8 (CFS)	Date/Time of Peak Discharge :	01Jan2000, 02:30
Total Precipitation :	7.66 (IN)	Total Direct Runoff :	5.77 (IN)
Total Loss :	1.89 (IN)	Total Baseflow :	10.10 (IN)
Total Excess :	5.77 (IN)	Discharge :	15.87 (IN)

US EPA ARCHIVE DOCUMENT

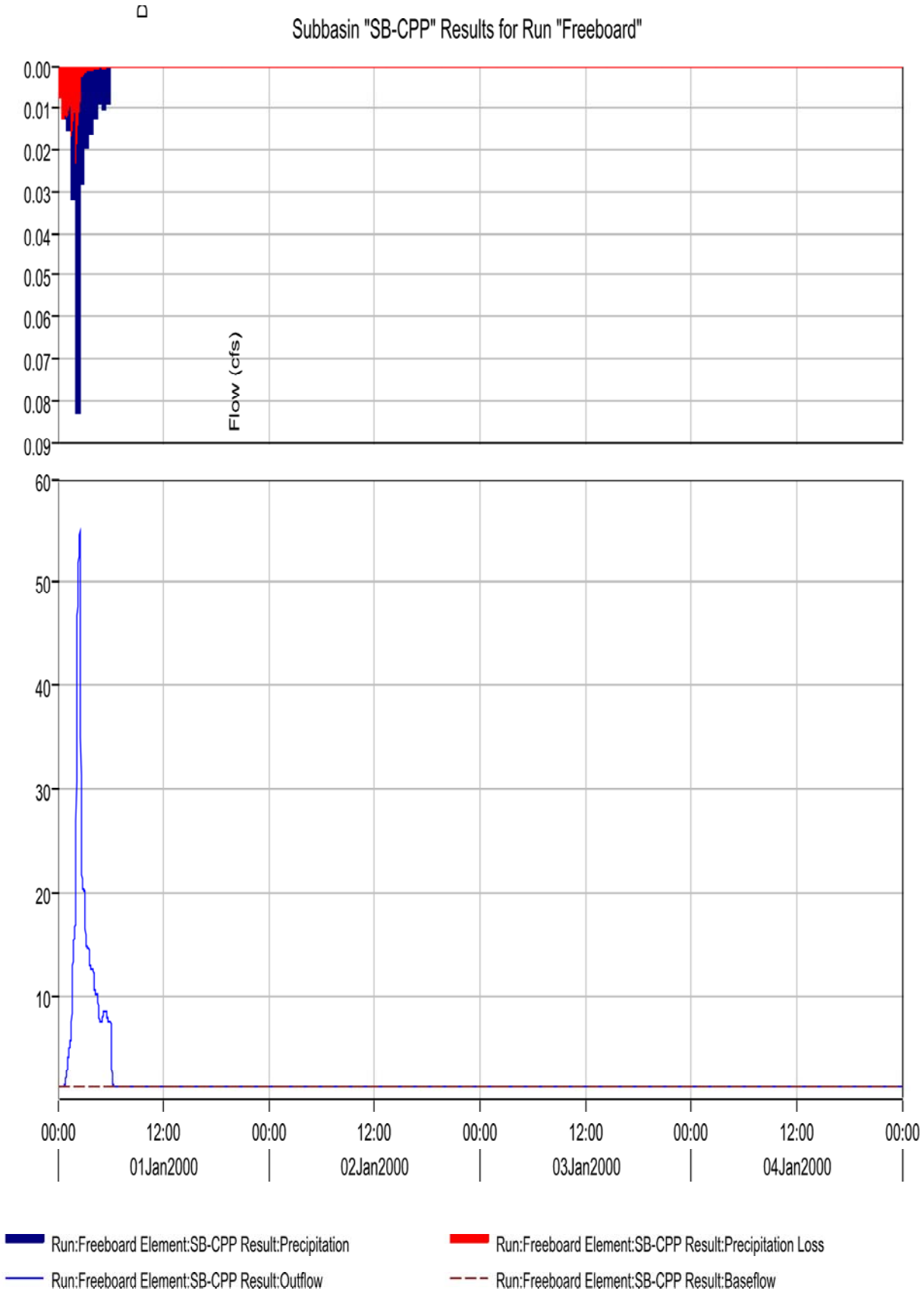

US EPA ARCHIVE DOCUMENT

Project: GRHH

Simulation Run: Freeboard Reservoir: CPP

Start of Run:	01Jan2000, 00:00	Basin Model:	Green River Station - FULL
End of Run:	05Jan2000, 00:00	Meteorologic Model:	NRCS 6-Hr
Compute Time:	14Jul2011, 10:35:30	Control Specifications:	NRCS 6-Hr

Volume Units: IN

Computed Results

Peak Inflow :	68.2 (CFS)	Date/Time of Peak Inflow :	01Jan2000, 02:31
Peak Outflow :	13.5 (CFS)	Date/Time of Peak Outflow :	01Jan2000, 04:38
Total Inflow :	11.64 (IN)	Peak Storage :	15.7 (AC-FT)
Total Outflow :	16.15 (IN)	Peak Elevation :	404.7 (FT)

US EPA ARCHIVE DOCUMENT

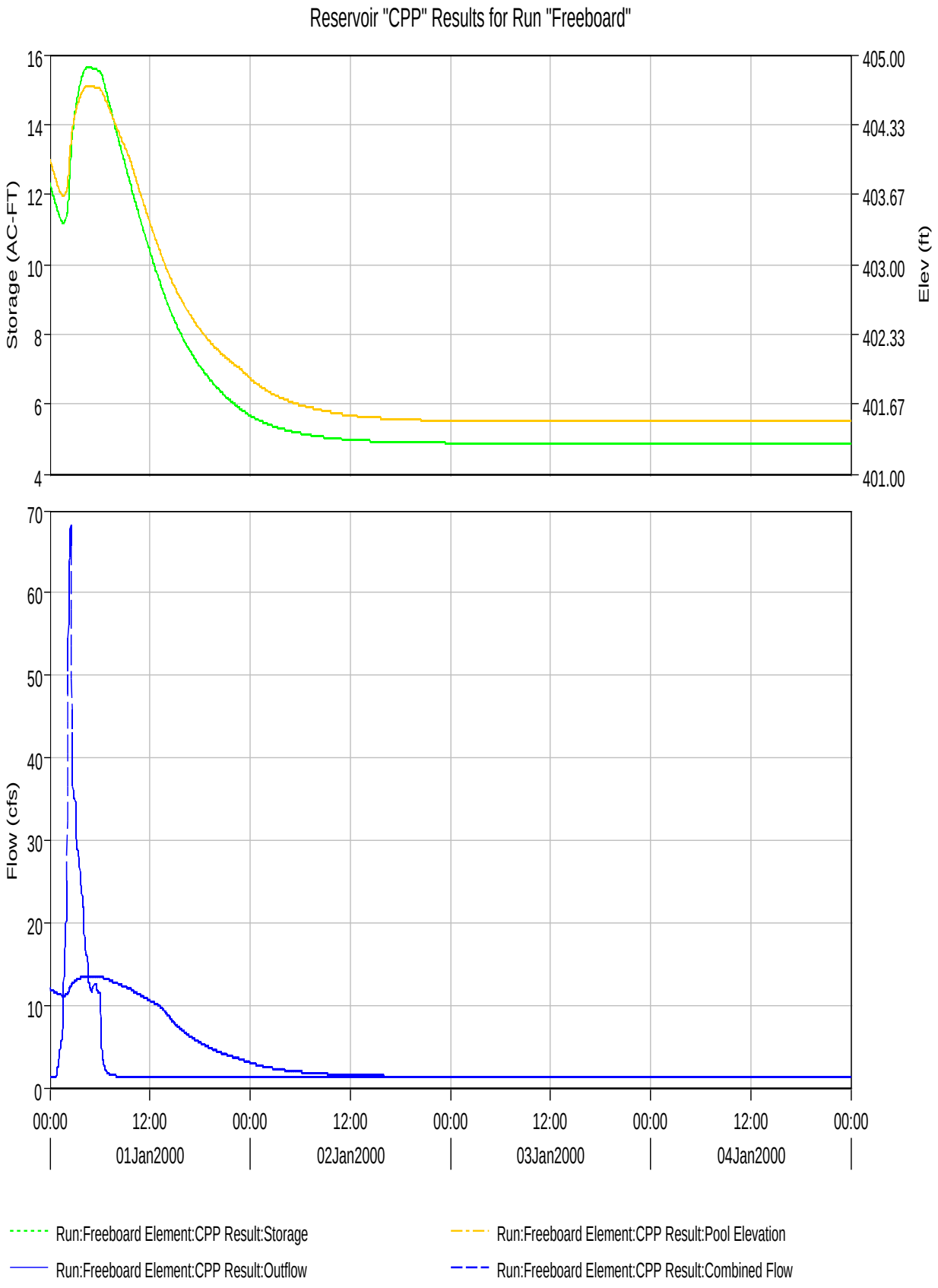

US EPA ARCHIVE DOCUMENT

Project: GRHH

Simulation Run: Freeboard Subbasin: SB-SP

Start of Run:	01Jan2000, 00:00	Basin Model:	Green River Station - FULL
End of Run:	05Jan2000, 00:00	Meteorologic Model:	NRCS 6-Hr
Compute Time:	14Jul2011, 10:35:30	Control Specifications:	NRCS 6-Hr

Volume Units: IN

Computed Results

Peak Discharge :	43.7 (CFS)	Date/Time of Peak Discharge :	01Jan2000, 02:34
Total Precipitation :	7.66 (IN)	Total Direct Runoff :	6.24 (IN)
Total Loss :	1.42 (IN)	Total Baseflow :	0.00 (IN)
Total Excess :	6.24 (IN)	Discharge :	6.24 (IN)

US EPA ARCHIVE DOCUMENT

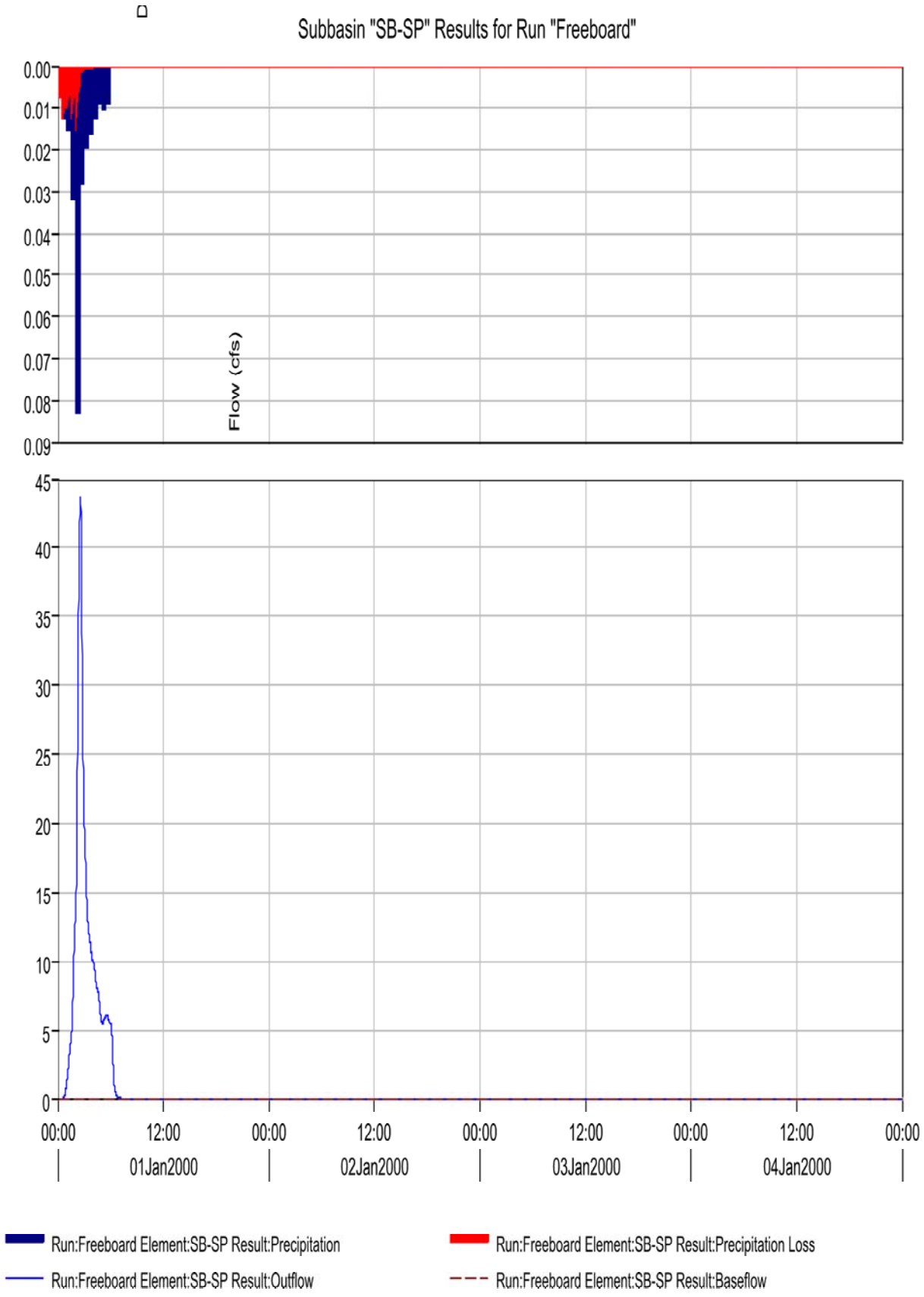

US EPA ARCHIVE DOCUMENT

Project: GRHH

Simulation Run: Freeboard Reservoir: SP

Start of Run:	01Jan2000, 00:00	Basin Model:	Green River Station - FULL
End of Run:	05Jan2000, 00:00	Meteorologic Model:	NRCS 6-Hr
Compute Time:	14Jul2011, 10:35:30	Control Specifications:	NRCS 6-Hr

Volume Units: IN

Computed Results

Peak Inflow :	43.7 (CFS)	Date/Time of Peak Inflow :	01Jan2000, 02:34
Peak Outflow :	1.1 (CFS)	Date/Time of Peak Outflow :	01Jan2000, 06:25
Total Inflow :	6.24 (IN)	Peak Storage :	49.3 (AC-FT)
Total Outflow :	9.75 (IN)	Peak Elevation :	403.1 (FT)

US EPA ARCHIVE DOCUMENT

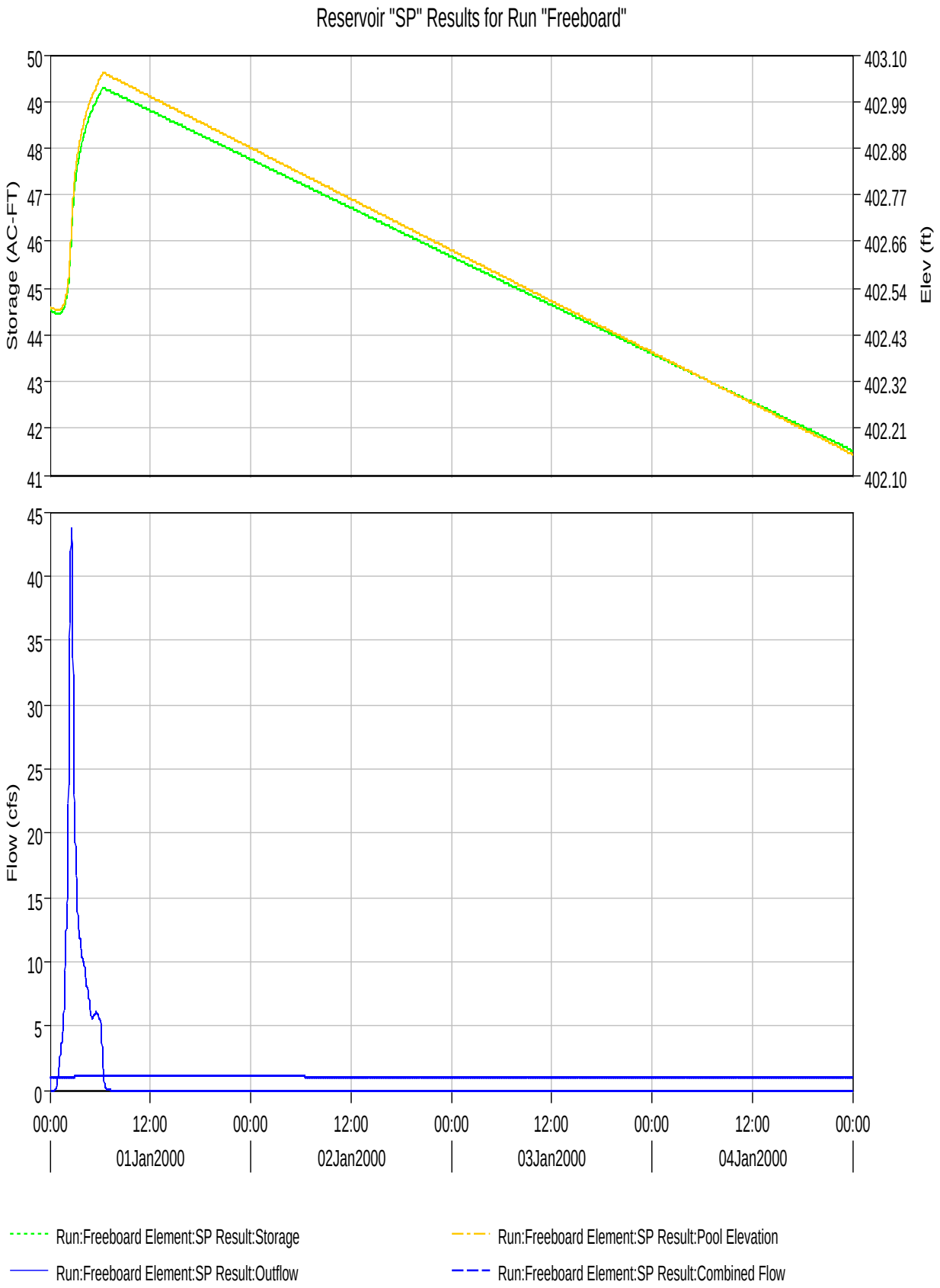

US EPA ARCHIVE DOCUMENT

Project: GRHH

Simulation Run: Freeboard Subbasin: SB-ATB2

Start of Run:	01Jan2000, 00:00	Basin Model:	Green River Station - FULL
End of Run:	05Jan2000, 00:00	Meteorologic Model:	NRCS 6-Hr
Compute Time:	14Jul2011, 10:35:30	Control Specifications:	NRCS 6-Hr

Volume Units: IN

Computed Results

Peak Discharge :	112.1 (CFS)	Date/Time of Peak Discharge :	01Jan2000, 02:44
Total Precipitation :	7.66 (IN)	Total Direct Runoff :	4.85 (IN)
Total Loss :	2.81 (IN)	Total Baseflow :	0.00 (IN)
Total Excess :	4.85 (IN)	Discharge :	4.85 (IN)

US EPA ARCHIVE DOCUMENT

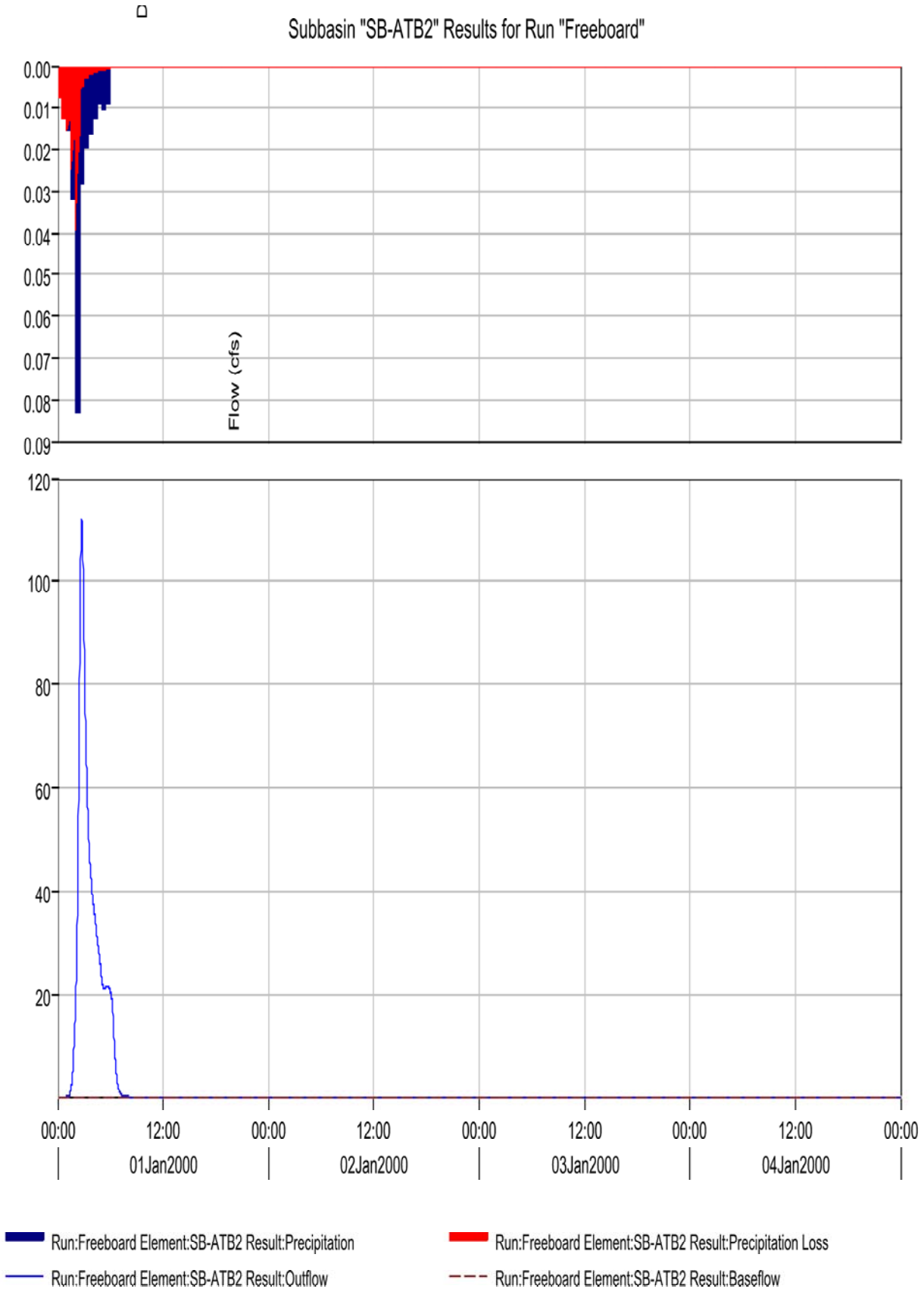

US EPA ARCHIVE DOCUMENT

Project: GRHH

Simulation Run: Freeboard Reservoir: ATB2

Start of Run:	01Jan2000, 00:00	Basin Model:	Green River Station - FULL
End of Run:	05Jan2000, 00:00	Meteorologic Model:	NRCS 6-Hr
Compute Time:	14Jul2011, 10:35:30	Control Specifications:	NRCS 6-Hr

Volume Units: IN

Computed Results

Peak Inflow :	129.2 (CFS)	Date/Time of Peak Inflow :	01Jan2000, 02:45
Peak Outflow :	25.7 (CFS)	Date/Time of Peak Outflow :	01Jan2000, 08:43
Total Inflow :	8.98 (IN)	Peak Storage :	20.6 (AC-FT)
Total Outflow :	8.38 (IN)	Peak Elevation :	400.2 (FT)

US EPA ARCHIVE DOCUMENT

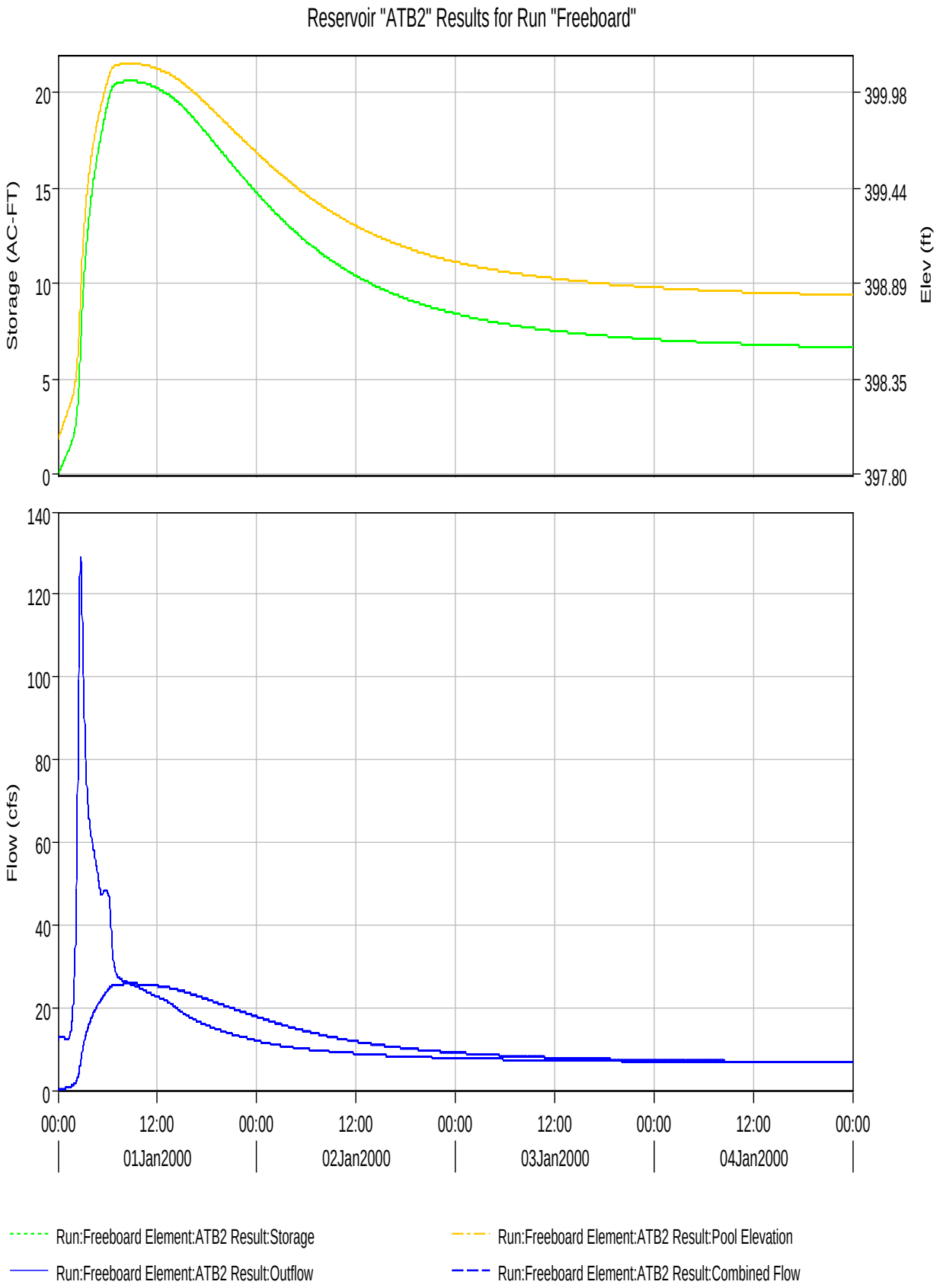

US EPA ARCHIVE DOCUMENT

Project: GRHH Simulation Run: Principal Spillway

Start of Run: 01Jan2000, 00:00 Basin Model: Green River Station - FU
End of Run: 06Jan2000, 00:00 Meteorologic Model: NRCS Type II 24-Hr
Compute Time: 14Jul2011, 14:15:10 Control Specifications: NRCS Type II 24-Hr

Hydrologic Element	Drainage Area (MI2)	Peak Discharge (CFS)	Time of Peak	Volume (IN)
SB-ATB1	0.100	254.6	01Jan2000, 12:12	12.19
ATB1	0.100	10.0	01Jan2000, 19:41	9.86
SB-ATB2	0.062	120.5	01Jan2000, 12:16	3.99
SB-CPP	0.019	87.5	01Jan2000, 11:58	17.48
SB-N	0.008	23.3	01Jan2000, 12:03	3.57
N	0.008	12.5	01Jan2000, 12:12	3.57
SB-S	0.004	18.2	01Jan2000, 11:59	5.08
S	0.012	14.7	01Jan2000, 12:20	4.07
CPP	0.031	12.0	01Jan2000, 00:00	16.80
SB-SP	0.016	55.0	01Jan2000, 12:07	5.30
SP	0.016	1.0	01Jan2000, 19:11	12.18
ATB2	0.209	21.6	01Jan2000, 19:32	8.74

US EPA ARCHIVE DOCUMENT

Project: GRHH

Simulation Run: Principal Spillway Subbasin: SB-ATB1

Start of Run:	01Jan2000, 00:00	Basin Model:	Green River Station - FULL
End of Run:	06Jan2000, 00:00	Meteorologic Model:	NRCS Type II 24-Hr
Compute Time:	14Jul2011, 14:15:10	Control Specifications:	NRCS Type II 24-Hr

Volume Units: IN

Computed Results

Peak Discharge :	254.6 (CFS)	Date/Time of Peak Discharge :	01Jan2000, 12:12
Total Precipitation :	6.70 (IN)	Total Direct Runoff :	4.53 (IN)
Total Loss :	2.17 (IN)	Total Baseflow :	7.66 (IN)
Total Excess :	4.53 (IN)	Discharge :	12.19 (IN)

US EPA ARCHIVE DOCUMENT

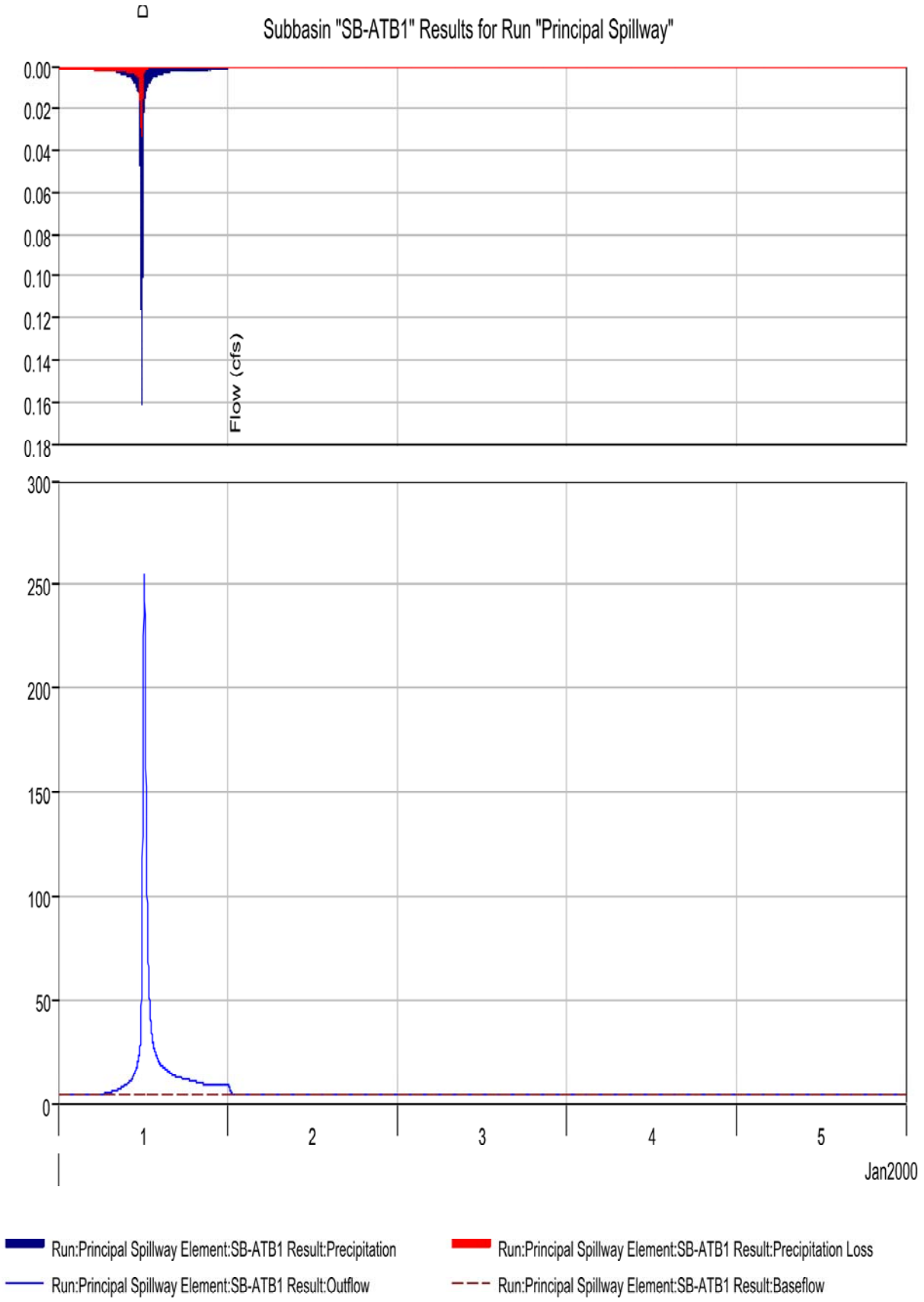

US EPA ARCHIVE DOCUMENT

Project: GRHH

Simulation Run: Principal Spillway Reservoir: ATB1

Start of Run:	01Jan2000, 00:00	Basin Model:	Green River Station - FULL
End of Run:	06Jan2000, 00:00	Meteorologic Model:	NRCS Type II 24-Hr
Compute Time:	14Jul2011, 14:15:10	Control Specifications:	NRCS Type II 24-Hr

Volume Units: IN

Computed Results

Peak Inflow :	254.6 (CFS)	Date/Time of Peak Inflow :	01Jan2000, 12:12
Peak Outflow :	10.0 (CFS)	Date/Time of Peak Outflow :	01Jan2000, 19:41
Total Inflow :	12.19 (IN)	Peak Storage :	22.7 (AC-FT)
Total Outflow :	9.86 (IN)	Peak Elevation :	448.3 (FT)

US EPA ARCHIVE DOCUMENT

US EPA ARCHIVE DOCUMENT

Reservoir "ATB1" Results for Run "Principal Spillway"

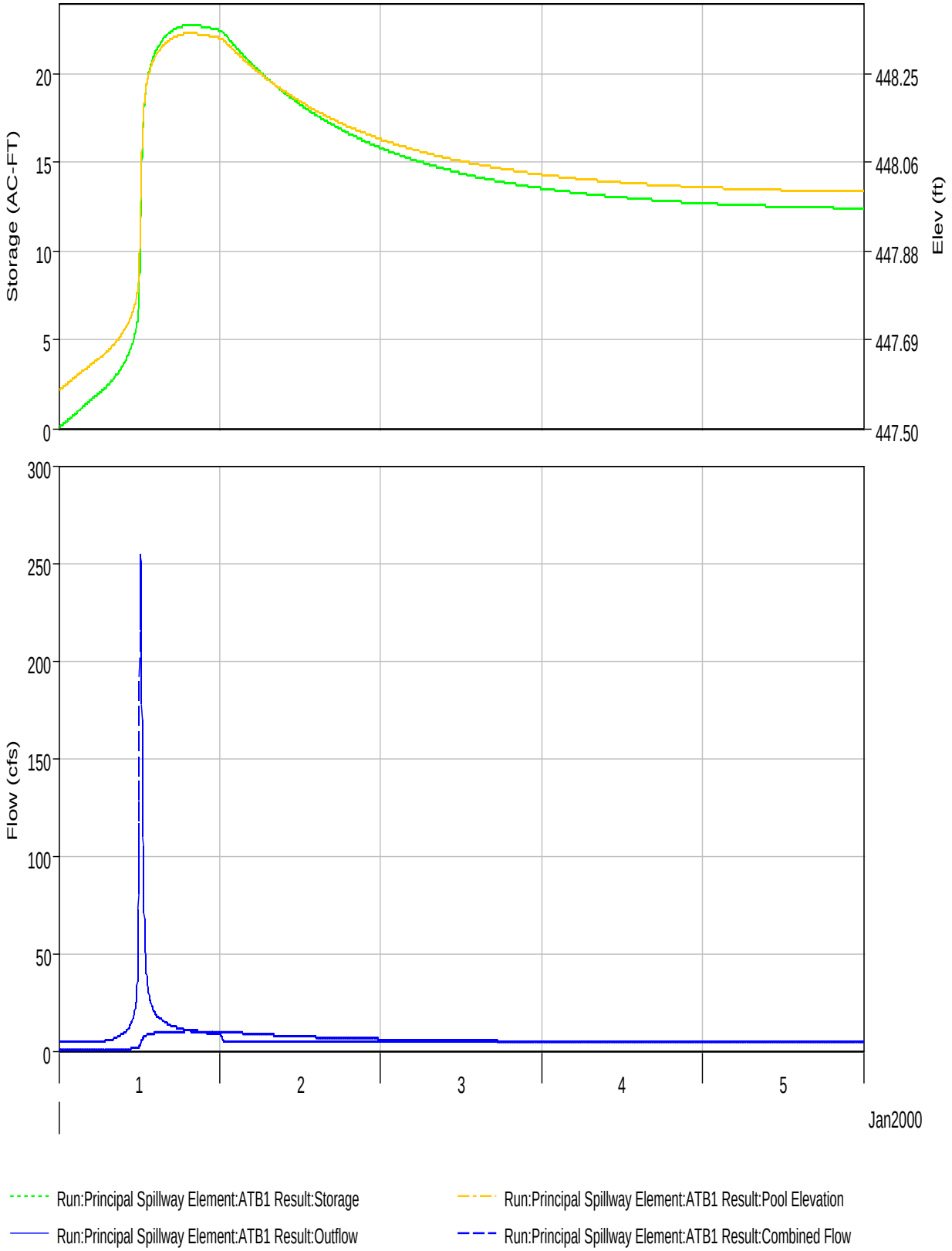

Project: GRHH

Simulation Run: Principal Spillway Subbasin: SB-CPP

Start of Run:	01Jan2000, 00:00	Basin Model:	Green River Station - FULL
End of Run:	06Jan2000, 00:00	Meteorologic Model:	NRCS Type II 24-Hr
Compute Time:	14Jul2011, 14:15:10	Control Specifications:	NRCS Type II 24-Hr

Volume Units: IN

Computed Results

Peak Discharge :	87.5 (CFS)	Date/Time of Peak Discharge :	01Jan2000, 11:58
Total Precipitation :	6.70 (IN)	Total Direct Runoff :	4.86 (IN)
Total Loss :	1.84 (IN)	Total Baseflow :	12.63 (IN)
Total Excess :	4.86 (IN)	Discharge :	17.48 (IN)

US EPA ARCHIVE DOCUMENT

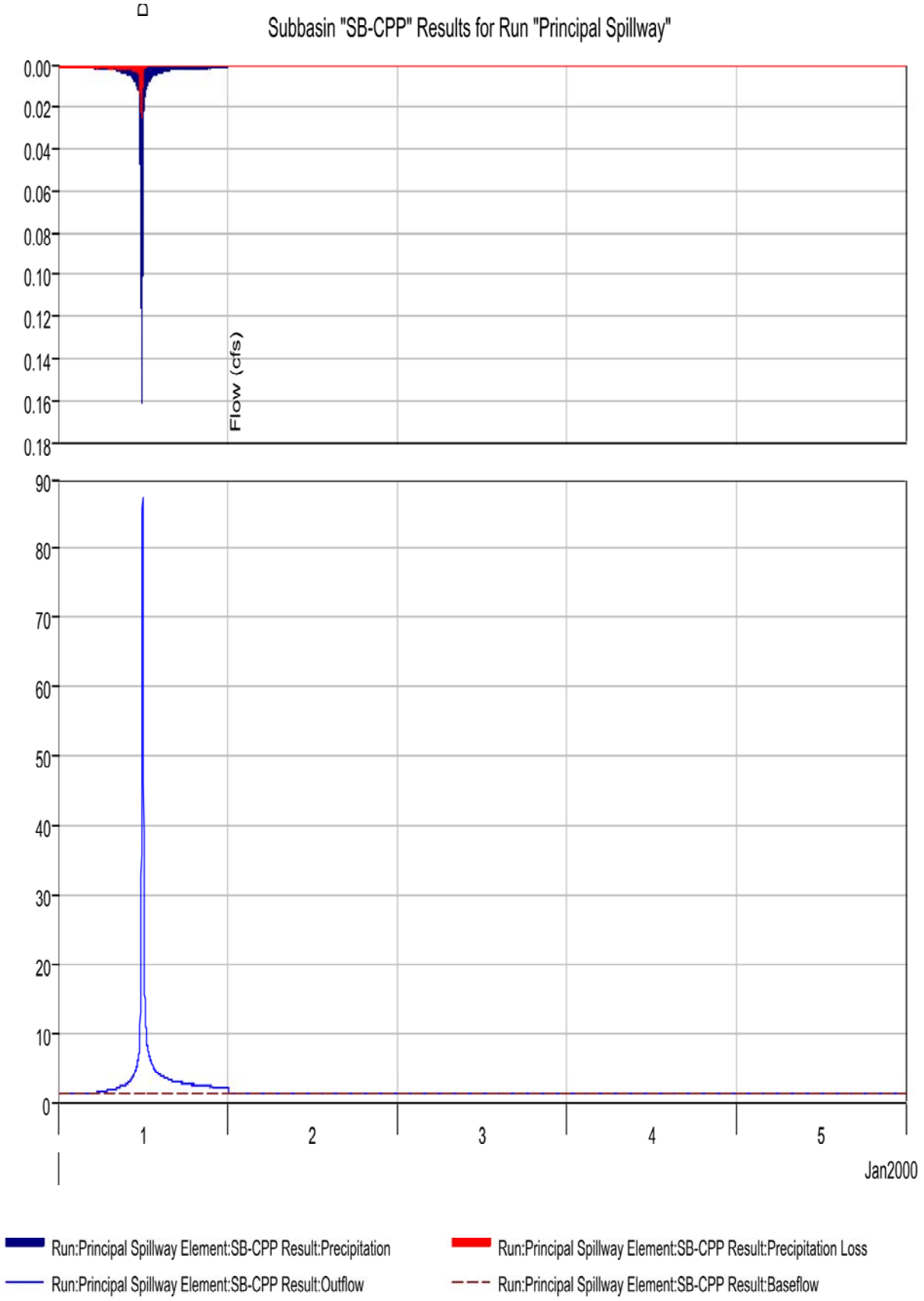

US EPA ARCHIVE DOCUMENT

Project: GRHH

Simulation Run: Principal Spillway Reservoir: CPP

Start of Run:	01Jan2000, 00:00	Basin Model:	Green River Station - FULL
End of Run:	06Jan2000, 00:00	Meteorologic Model:	NRCS Type II 24-Hr
Compute Time:	14Jul2011, 14:15:10	Control Specifications:	NRCS Type II 24-Hr

Volume Units: IN

Computed Results

Peak Inflow :	99.6 (CFS)	Date/Time of Peak Inflow :	01Jan2000, 11:59
Peak Outflow :	12.0 (CFS)	Date/Time of Peak Outflow :	01Jan2000, 00:00
Total Inflow :	12.29 (IN)	Peak Storage :	12.3 (AC-FT)
Total Outflow :	16.80 (IN)	Peak Elevation :	404.0 (FT)

US EPA ARCHIVE DOCUMENT

US EPA ARCHIVE DOCUMENT

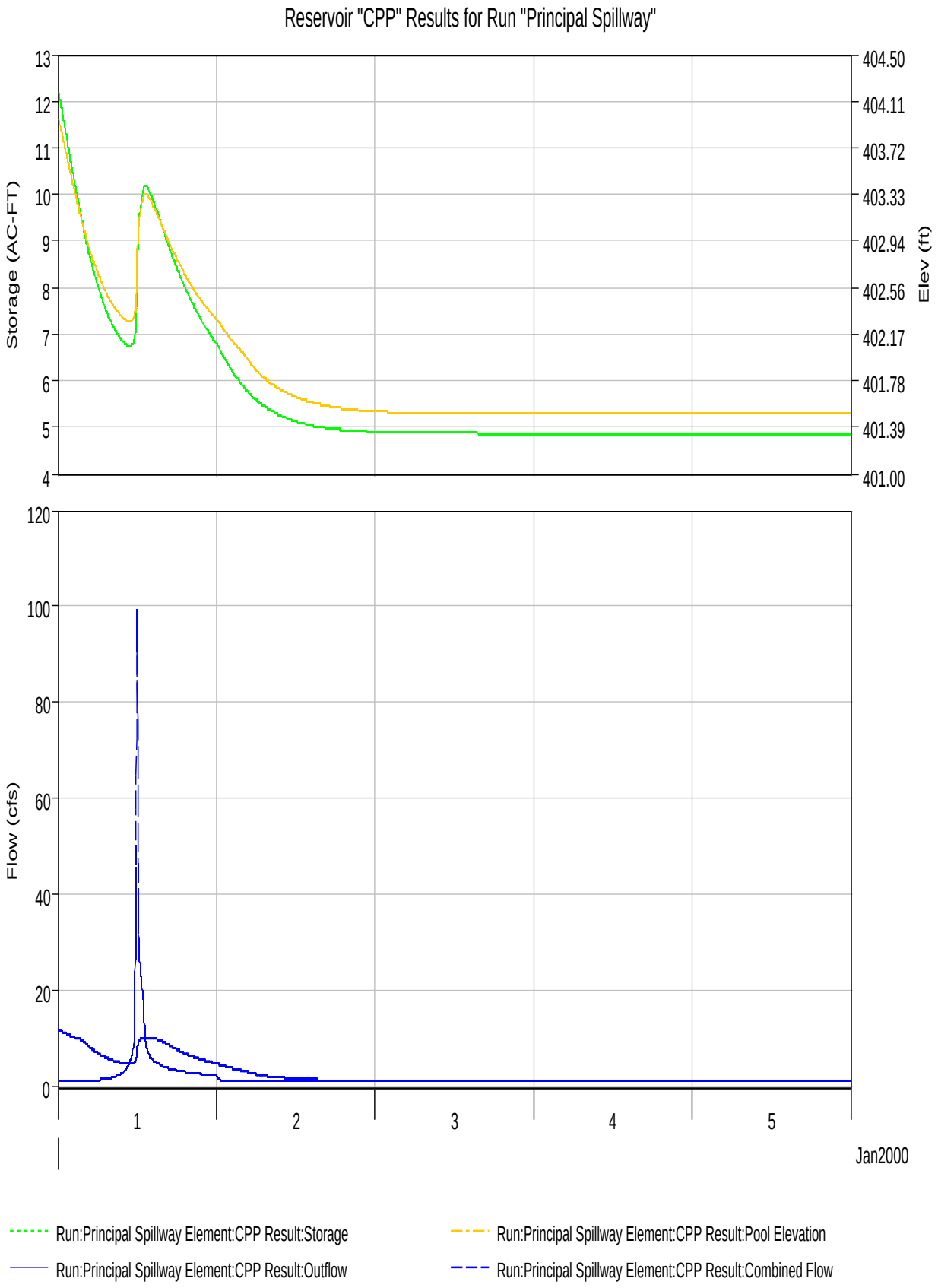

Project: GRHH

Simulation Run: Principal Spillway Subbasin: SB-SP

Start of Run:	01Jan2000, 00:00	Basin Model:	Green River Station - FULL
End of Run:	06Jan2000, 00:00	Meteorologic Model:	NRCS Type II 24-Hr
Compute Time:	14Jul2011, 14:15:10	Control Specifications:	NRCS Type II 24-Hr

Volume Units: IN

Computed Results

Peak Discharge :	55.0 (CFS)	Date/Time of Peak Discharge :	01Jan2000, 12:07
Total Precipitation :	6.70 (IN)	Total Direct Runoff :	5.30 (IN)
Total Loss :	1.40 (IN)	Total Baseflow :	0.00 (IN)
Total Excess :	5.30 (IN)	Discharge :	5.30 (IN)

US EPA ARCHIVE DOCUMENT

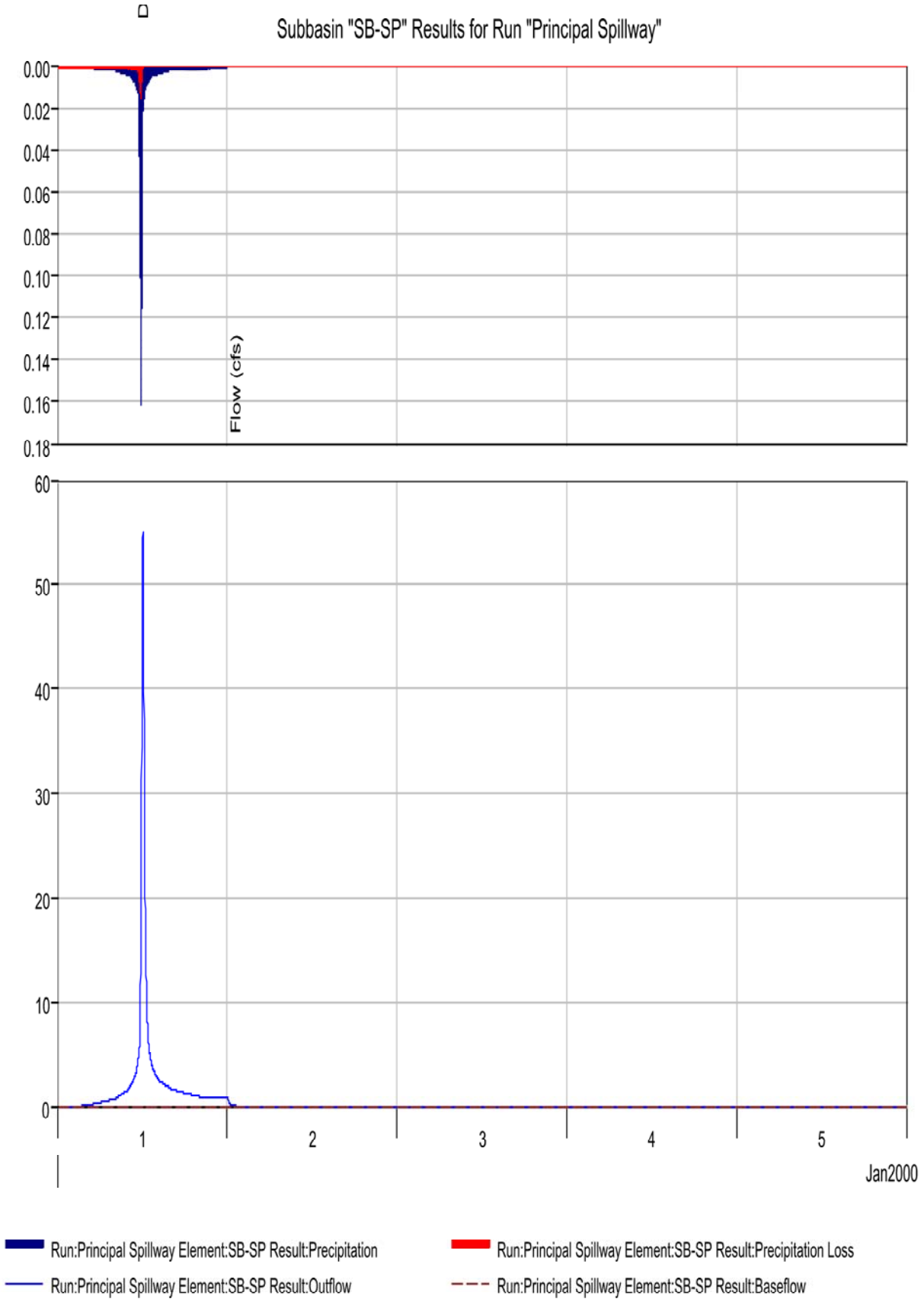

US EPA ARCHIVE DOCUMENT

Project: GRHH

Simulation Run: Principal Spillway Reservoir: SP

Start of Run:	01Jan2000, 00:00	Basin Model:	Green River Station - FULL
End of Run:	06Jan2000, 00:00	Meteorologic Model:	NRCS Type II 24-Hr
Compute Time:	14Jul2011, 14:15:10	Control Specifications:	NRCS Type II 24-Hr

Volume Units: IN

Computed Results

Peak Inflow :	55.0 (CFS)	Date/Time of Peak Inflow :	01Jan2000, 12:07
Peak Outflow :	1.0 (CFS)	Date/Time of Peak Outflow :	01Jan2000, 19:11
Total Inflow :	5.30 (IN)	Peak Storage :	47.0 (AC-FT)
Total Outflow :	12.18 (IN)	Peak Elevation :	402.8 (FT)

US EPA ARCHIVE DOCUMENT

US EPA ARCHIVE DOCUMENT

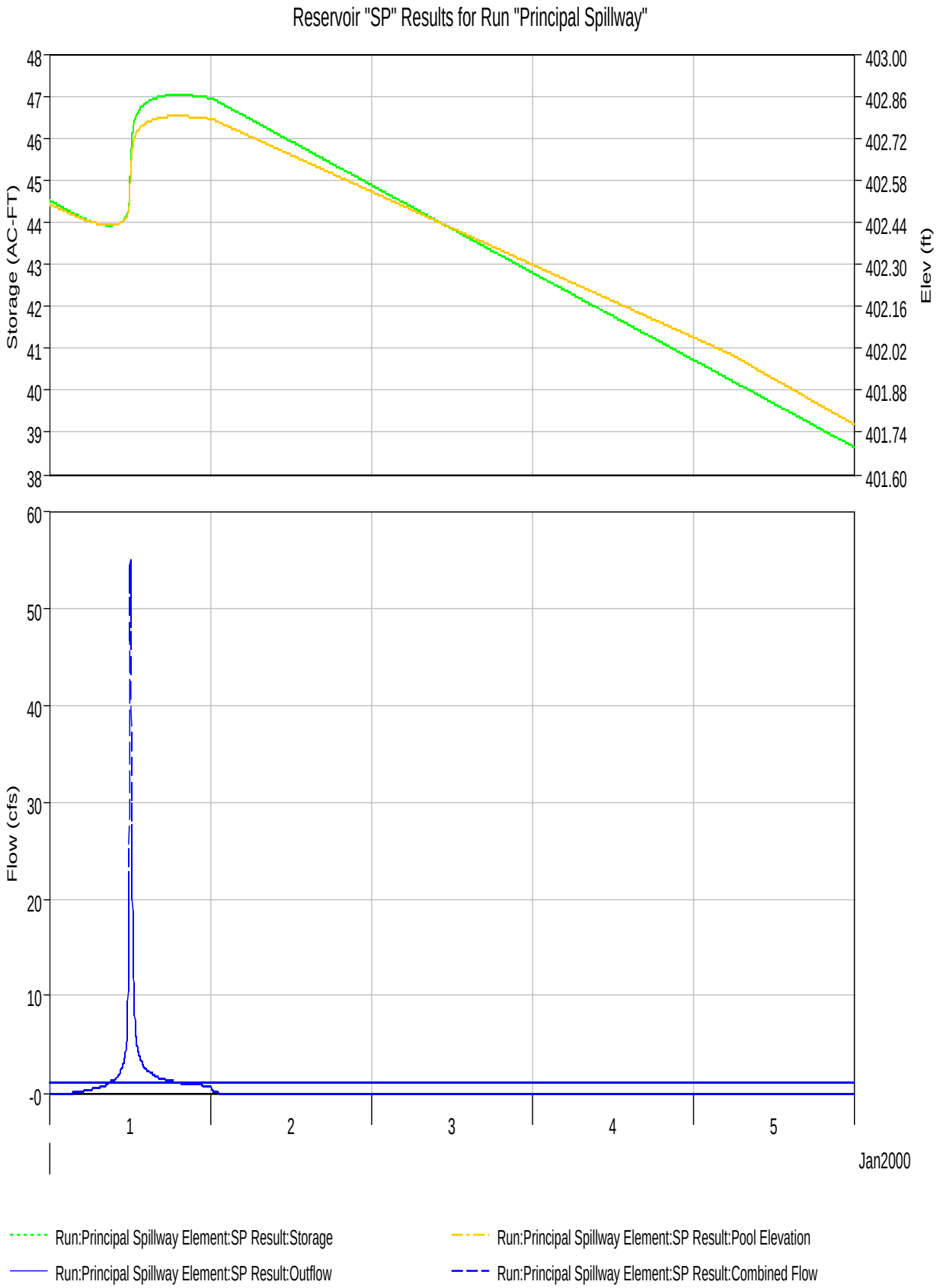

Project: GRHH

Simulation Run: Principal Spillway Subbasin: SB-ATB2

Start of Run:	01Jan2000, 00:00	Basin Model:	Green River Station - FULL
End of Run:	06Jan2000, 00:00	Meteorologic Model:	NRCS Type II 24-Hr
Compute Time:	14Jul2011, 14:15:10	Control Specifications:	NRCS Type II 24-Hr

Volume Units: IN

Computed Results

Peak Discharge :	120.5 (CFS)	Date/Time of Peak Discharge :	01Jan2000, 12:16
Total Precipitation :	6.70 (IN)	Total Direct Runoff :	3.99 (IN)
Total Loss :	2.71 (IN)	Total Baseflow :	0.00 (IN)
Total Excess :	3.99 (IN)	Discharge :	3.99 (IN)

US EPA ARCHIVE DOCUMENT

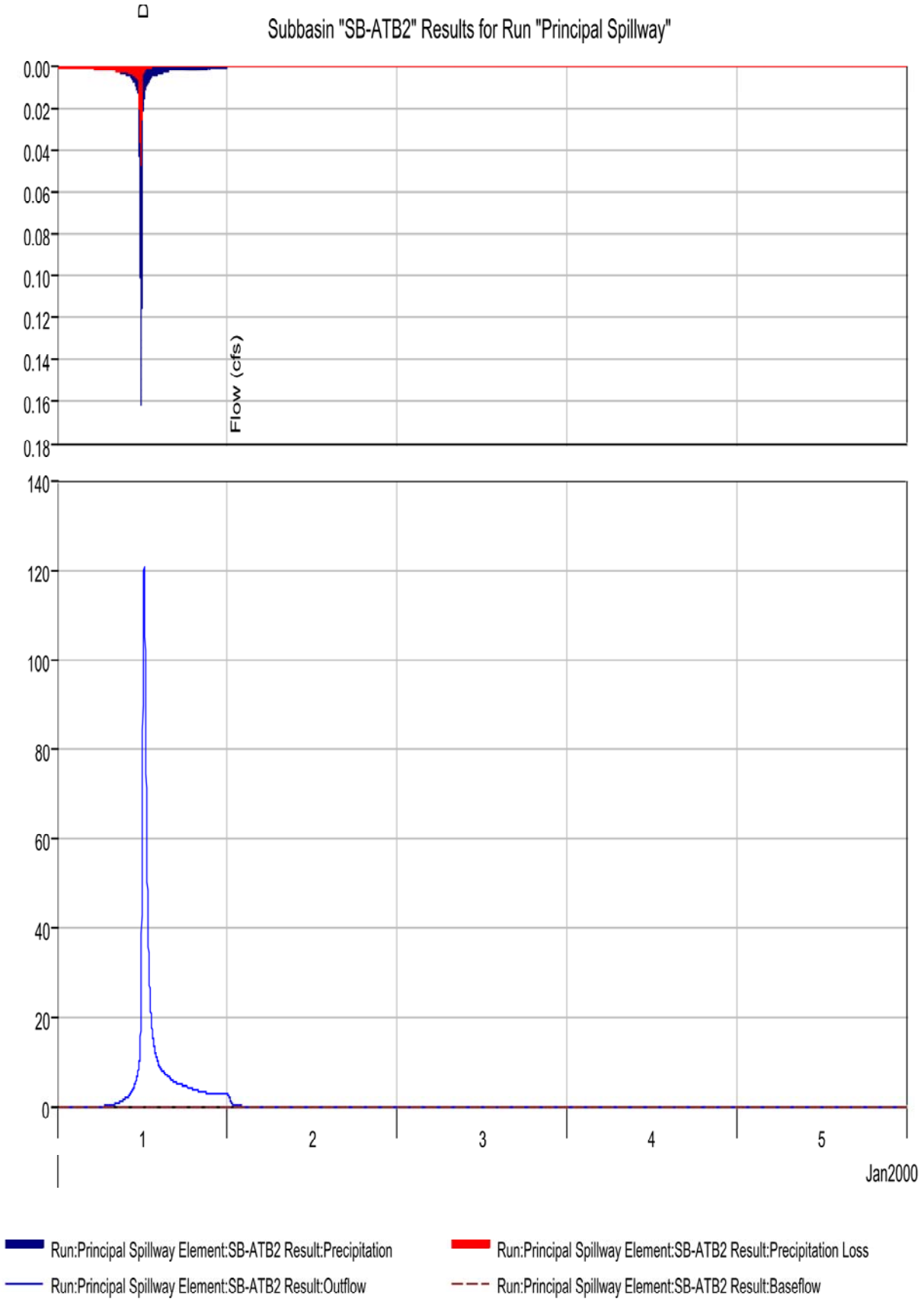

US EPA ARCHIVE DOCUMENT

Project: GRHH

Simulation Run: Principal Spillway Reservoir: ATB2

Start of Run:	01Jan2000, 00:00	Basin Model:	Green River Station - FULL
End of Run:	06Jan2000, 00:00	Meteorologic Model:	NRCS Type II 24-Hr
Compute Time:	14Jul2011, 14:15:10	Control Specifications:	NRCS Type II 24-Hr

Volume Units: IN

Computed Results

Peak Inflow :	135.8 (CFS)	Date/Time of Peak Inflow :	01Jan2000, 12:17
Peak Outflow :	21.6 (CFS)	Date/Time of Peak Outflow :	01Jan2000, 19:32
Total Inflow :	9.33 (IN)	Peak Storage :	17.6 (AC-FT)
Total Outflow :	8.74 (IN)	Peak Elevation :	399.9 (FT)

US EPA ARCHIVE DOCUMENT

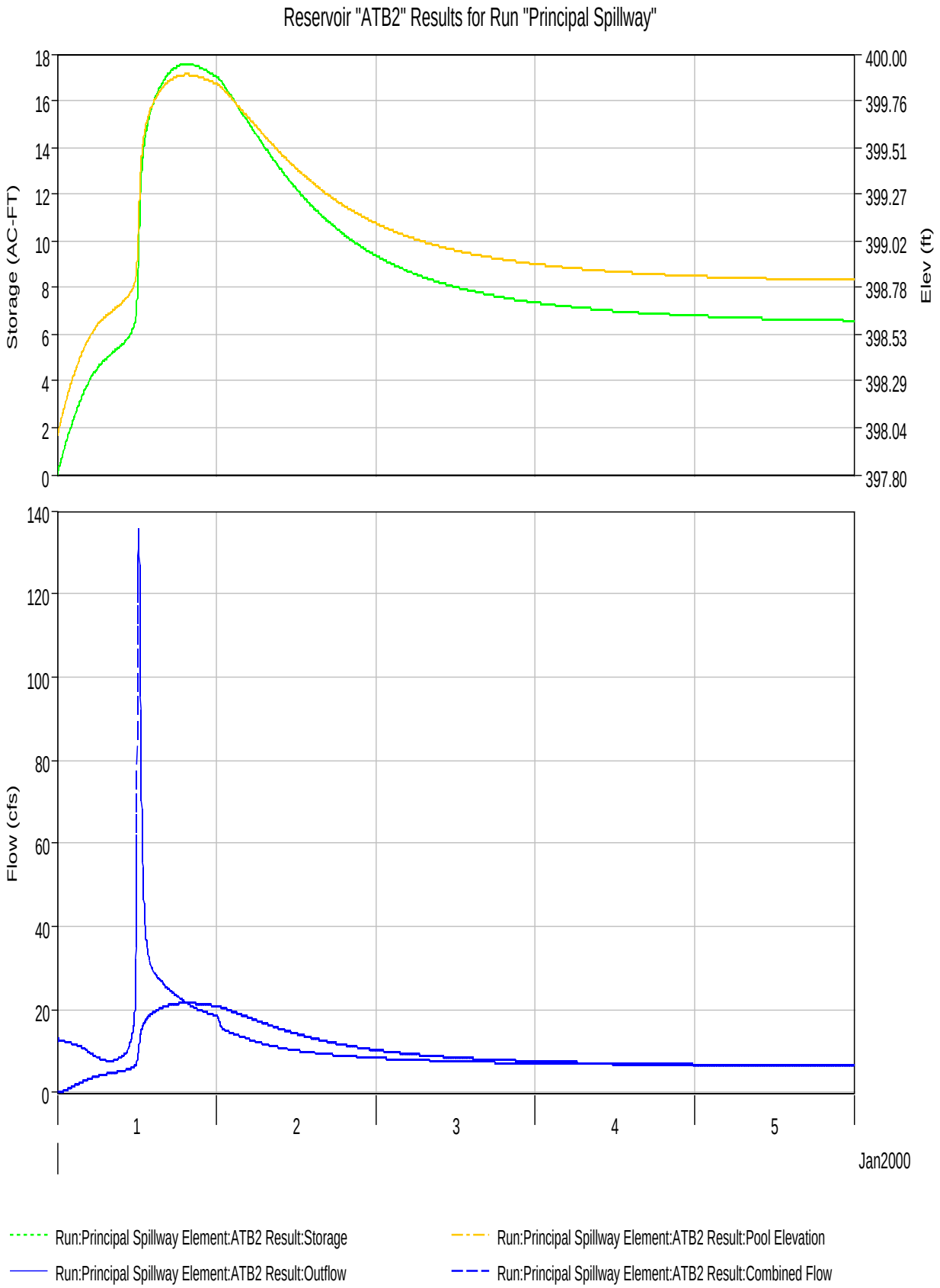

US EPA ARCHIVE DOCUMENT

Project: GRHH Simulation Run: Operational

Start of Run: 01Jan2000, 00:00 Basin Model: Green River Station - N
End of Run: 05Jan2000, 00:00 Meteorologic Model: NRCS 6-Hr
Compute Time: 14Jul2011, 13:21:04 Control Specifications: NRCS 6-Hr

Hydrologic Element	Drainage Area (MI2)	Peak Discharge (CFS)	Time of Peak	Volume (IN)
SB-ATB1	0.100	224.3	01Jan2000, 02:40	11.55
ATB1	0.100	23.3	01Jan2000, 06:21	10.63
SB-ATB2	0.062	112.1	01Jan2000, 02:44	4.85
SB-CPP	0.019	54.8	01Jan2000, 02:30	15.87
SB-N	0.008	16.9	01Jan2000, 02:33	4.40
N	0.008	11.8	01Jan2000, 02:42	4.40
SB-S	0.004	11.5	01Jan2000, 02:30	6.00
S	0.012	14.9	01Jan2000, 02:58	4.93
CPP	0.031	11.3	01Jan2000, 06:01	12.23
SB-SP	0.016	43.7	01Jan2000, 02:34	6.24
SP	0.016	1.0	01Jan2000, 06:25	8.99
ATB2	0.209	34.6	01Jan2000, 07:11	8.55

US EPA ARCHIVE DOCUMENT

Project: GRHH

Simulation Run: Operational Subbasin: SB-ATB1

Start of Run:	01Jan2000, 00:00	Basin Model:	Green River Station - Normal
End of Run:	05Jan2000, 00:00	Meteorologic Model:	NRCS 6-Hr
Compute Time:	14Jul2011, 13:21:04	Control Specifications:	NRCS 6-Hr

Volume Units: IN

Computed Results

Peak Discharge :	224.3 (CFS)	Date/Time of Peak Discharge :	01Jan2000, 02:40
Total Precipitation :	7.66 (IN)	Total Direct Runoff :	5.42 (IN)
Total Loss :	2.24 (IN)	Total Baseflow :	6.13 (IN)
Total Excess :	5.42 (IN)	Discharge :	11.55 (IN)

US EPA ARCHIVE DOCUMENT

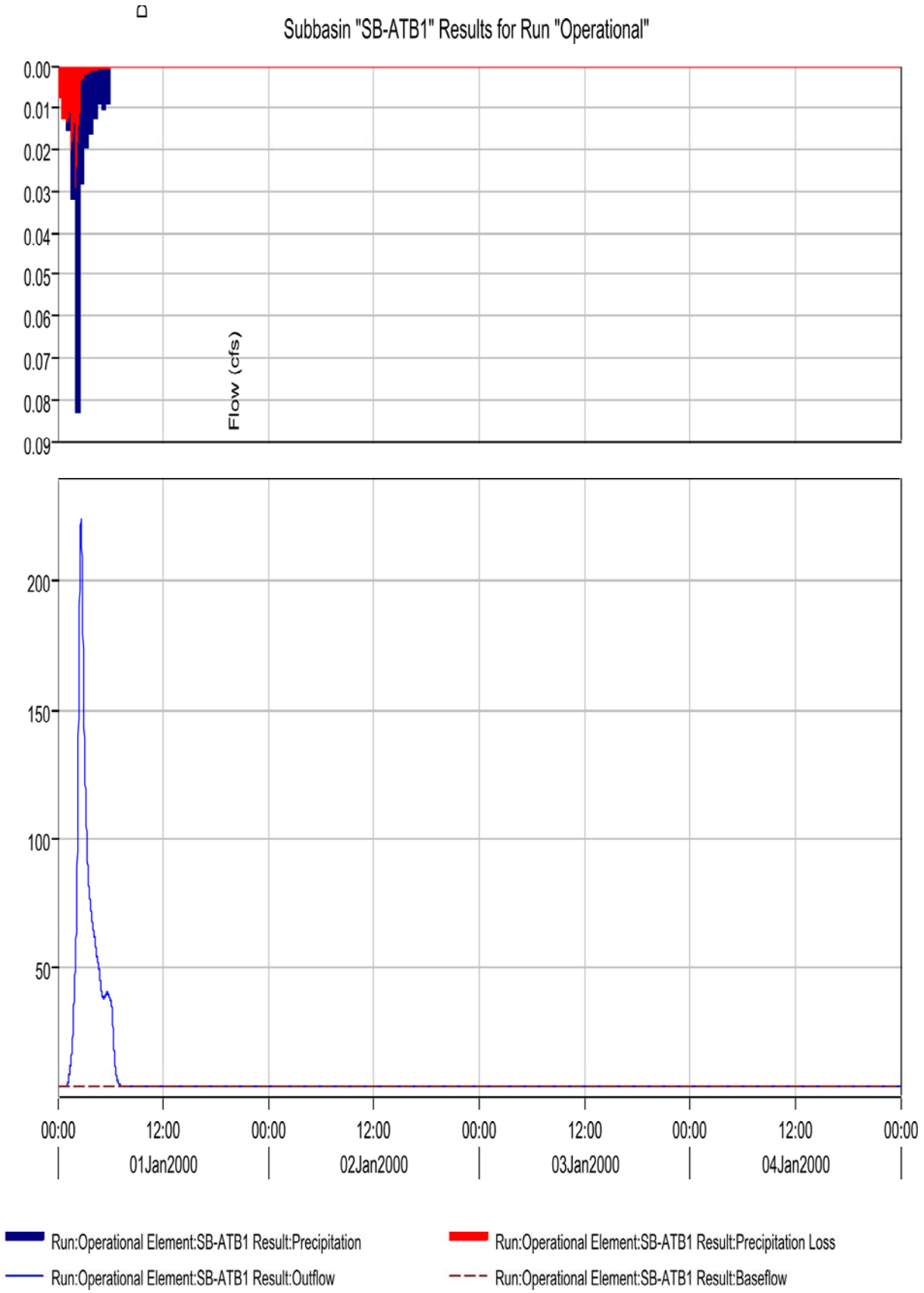

US EPA ARCHIVE DOCUMENT

Project: GRHH

Simulation Run: Operational Reservoir: ATB1

Start of Run:	01Jan2000, 00:00	Basin Model:	Green River Station - Normal
End of Run:	05Jan2000, 00:00	Meteorologic Model:	NRCS 6-Hr
Compute Time:	14Jul2011, 13:21:04	Control Specifications:	NRCS 6-Hr

Volume Units: IN

Computed Results

Peak Inflow :	224.3 (CFS)	Date/Time of Peak Inflow :	01Jan2000, 02:40
Peak Outflow :	23.3 (CFS)	Date/Time of Peak Outflow :	01Jan2000, 06:21
Total Inflow :	11.55 (IN)	Peak Storage :	24.7 (AC-FT)
Total Outflow :	10.63 (IN)	Peak Elevation :	446.4 (FT)

US EPA ARCHIVE DOCUMENT

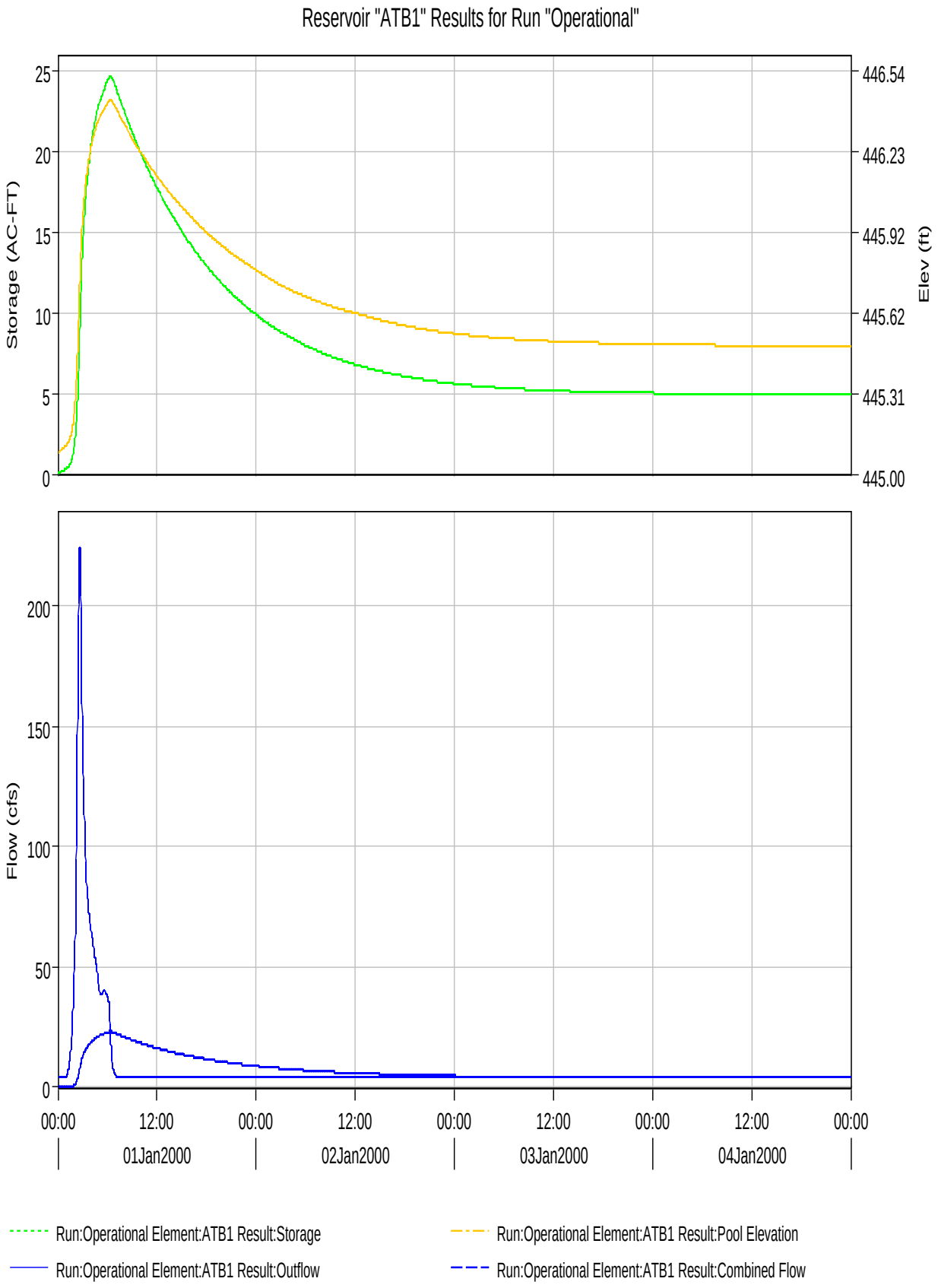

US EPA ARCHIVE DOCUMENT

Project: GRHH

Simulation Run: Operational Subbasin: SB-CPP

Start of Run:	01Jan2000, 00:00	Basin Model:	Green River Station - Normal
End of Run:	05Jan2000, 00:00	Meteorologic Model:	NRCS 6-Hr
Compute Time:	14Jul2011, 13:21:04	Control Specifications:	NRCS 6-Hr

Volume Units: IN

Computed Results

Peak Discharge :	54.8 (CFS)	Date/Time of Peak Discharge :	01Jan2000, 02:30
Total Precipitation :	7.66 (IN)	Total Direct Runoff :	5.77 (IN)
Total Loss :	1.89 (IN)	Total Baseflow :	10.10 (IN)
Total Excess :	5.77 (IN)	Discharge :	15.87 (IN)

US EPA ARCHIVE DOCUMENT

US EPA ARCHIVE DOCUMENT

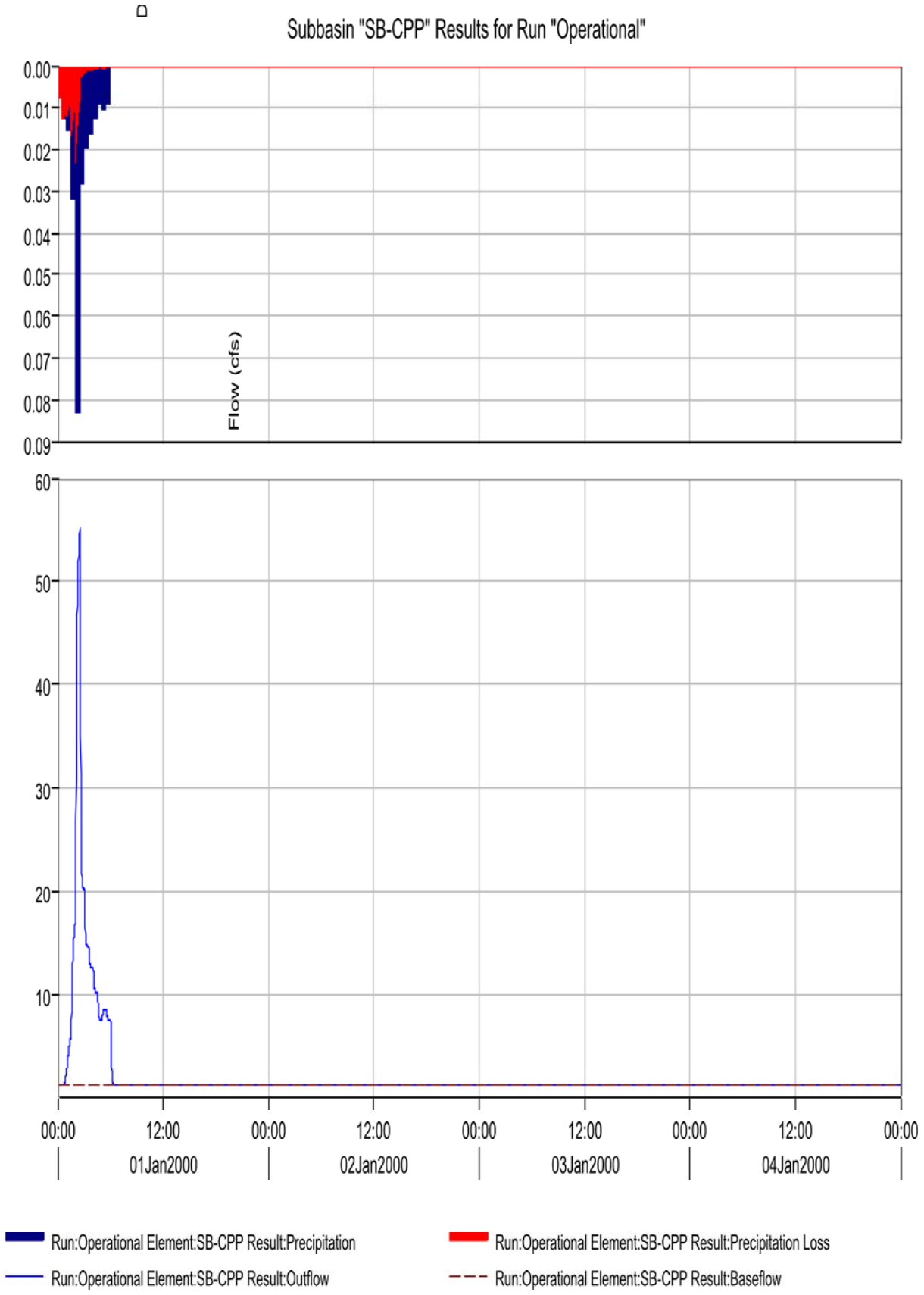

Project: GRHH

Simulation Run: Operational Reservoir: CPP

Start of Run:	01Jan2000, 00:00	Basin Model:	Green River Station - Normal
End of Run:	05Jan2000, 00:00	Meteorologic Model:	NRCS 6-Hr
Compute Time:	14Jul2011, 13:21:04	Control Specifications:	NRCS 6-Hr

Volume Units: IN

Computed Results

Peak Inflow :	68.2 (CFS)	Date/Time of Peak Inflow :	01Jan2000, 02:31
Peak Outflow :	11.3 (CFS)	Date/Time of Peak Outflow :	01Jan2000, 06:01
Total Inflow :	11.64 (IN)	Peak Storage :	11.4 (AC-FT)
Total Outflow :	12.23 (IN)	Peak Elevation :	403.7 (FT)

US EPA ARCHIVE DOCUMENT

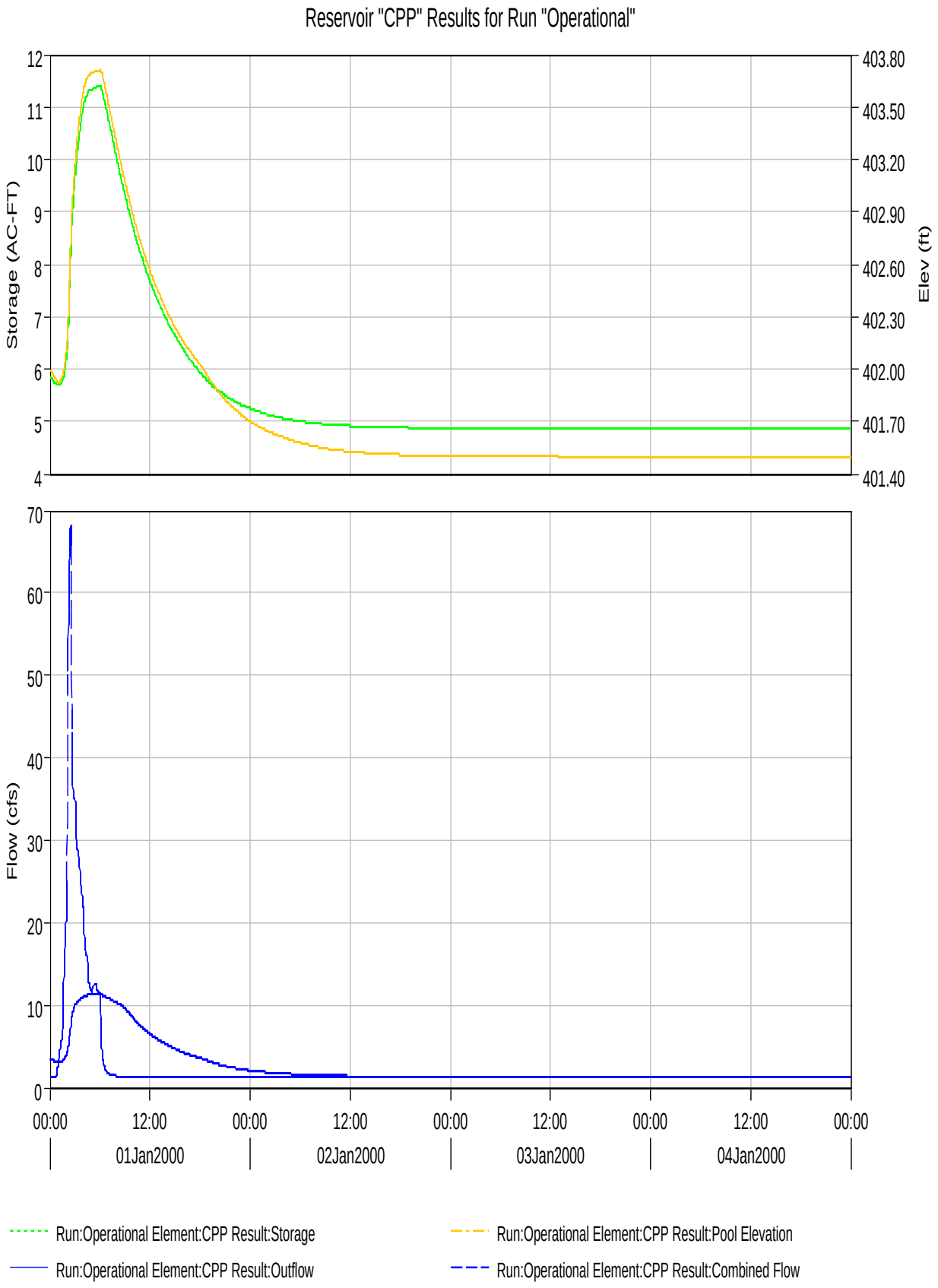

US EPA ARCHIVE DOCUMENT

Project: GRHH

Simulation Run: Operational Subbasin: SB-SP

Start of Run:	01Jan2000, 00:00	Basin Model:	Green River Station - Normal
End of Run:	05Jan2000, 00:00	Meteorologic Model:	NRCS 6-Hr
Compute Time:	14Jul2011, 13:21:04	Control Specifications:	NRCS 6-Hr

Volume Units: IN

Computed Results

Peak Discharge :	43.7 (CFS)	Date/Time of Peak Discharge :	01Jan2000, 02:34
Total Precipitation :	7.66 (IN)	Total Direct Runoff :	6.24 (IN)
Total Loss :	1.42 (IN)	Total Baseflow :	0.00 (IN)
Total Excess :	6.24 (IN)	Discharge :	6.24 (IN)

US EPA ARCHIVE DOCUMENT

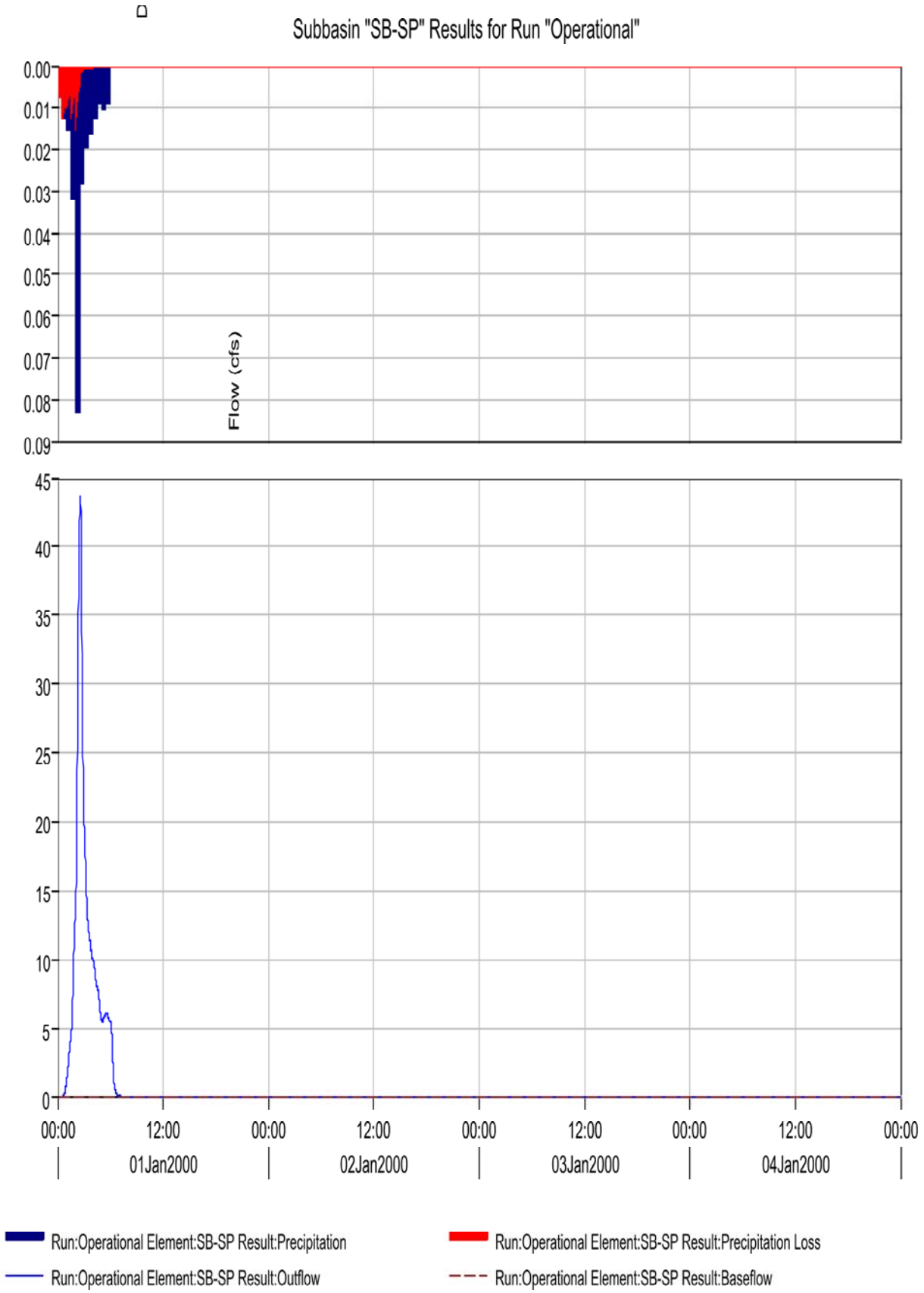

US EPA ARCHIVE DOCUMENT

Project: GRHH

Simulation Run: Operational Reservoir: SP

Start of Run:	01Jan2000, 00:00	Basin Model:	Green River Station - Normal
End of Run:	05Jan2000, 00:00	Meteorologic Model:	NRCS 6-Hr
Compute Time:	14Jul2011, 13:21:04	Control Specifications:	NRCS 6-Hr

Volume Units: IN

Computed Results

Peak Inflow :	43.7 (CFS)	Date/Time of Peak Inflow :	01Jan2000, 02:34
Peak Outflow :	1.0 (CFS)	Date/Time of Peak Outflow :	01Jan2000, 06:25
Total Inflow :	6.24 (IN)	Peak Storage :	20.8 (AC-FT)
Total Outflow :	8.99 (IN)	Peak Elevation :	399.0 (FT)

US EPA ARCHIVE DOCUMENT

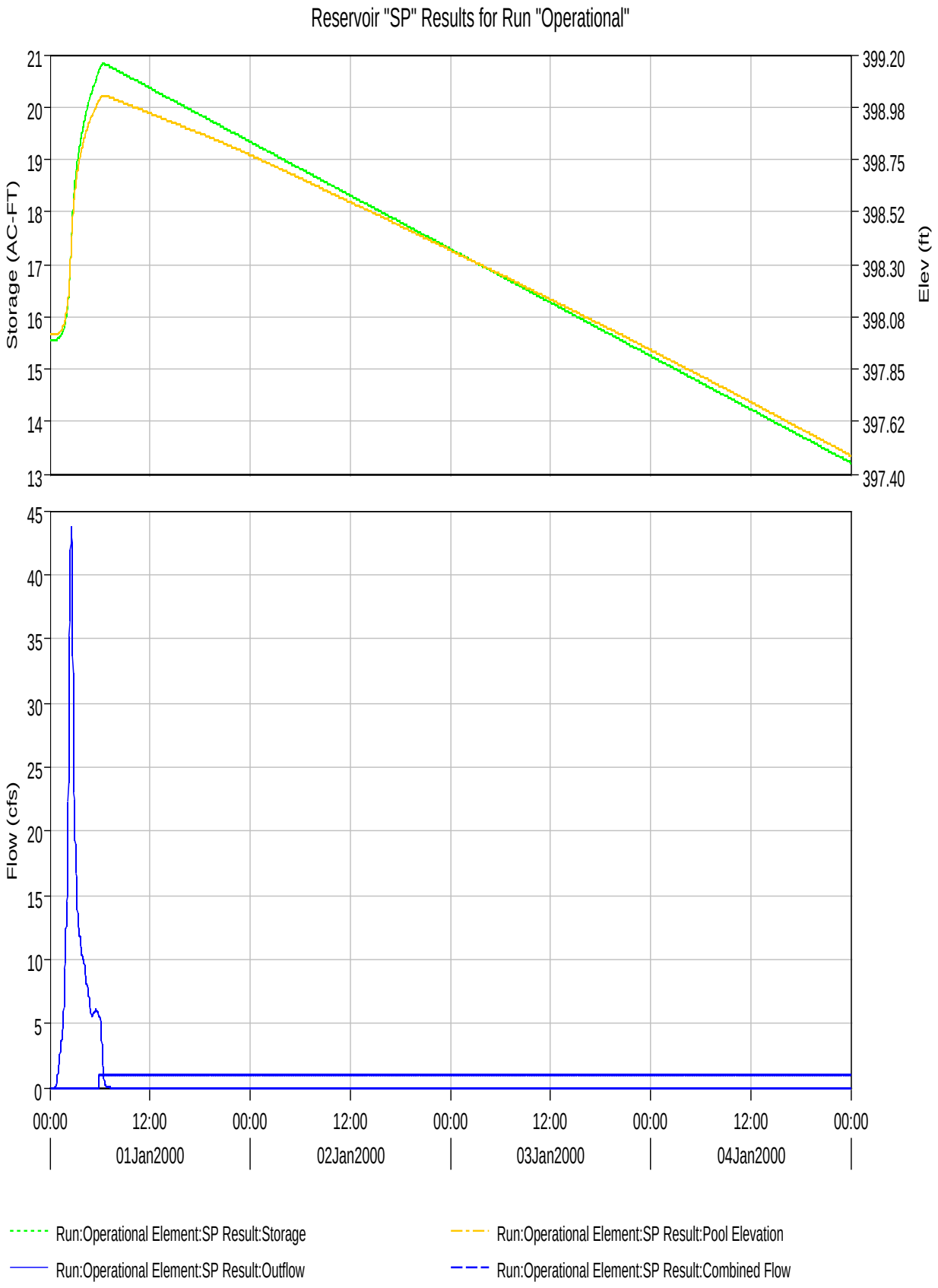

US EPA ARCHIVE DOCUMENT

Project: GRHH

Simulation Run: Operational Subbasin: SB-ATB2

Start of Run:	01Jan2000, 00:00	Basin Model:	Green River Station - Normal
End of Run:	05Jan2000, 00:00	Meteorologic Model:	NRCS 6-Hr
Compute Time:	14Jul2011, 13:21:04	Control Specifications:	NRCS 6-Hr

Volume Units: IN

Computed Results

Peak Discharge :	112.1 (CFS)	Date/Time of Peak Discharge :	01Jan2000, 02:44
Total Precipitation :	7.66 (IN)	Total Direct Runoff :	4.85 (IN)
Total Loss :	2.81 (IN)	Total Baseflow :	0.00 (IN)
Total Excess :	4.85 (IN)	Discharge :	4.85 (IN)

US EPA ARCHIVE DOCUMENT

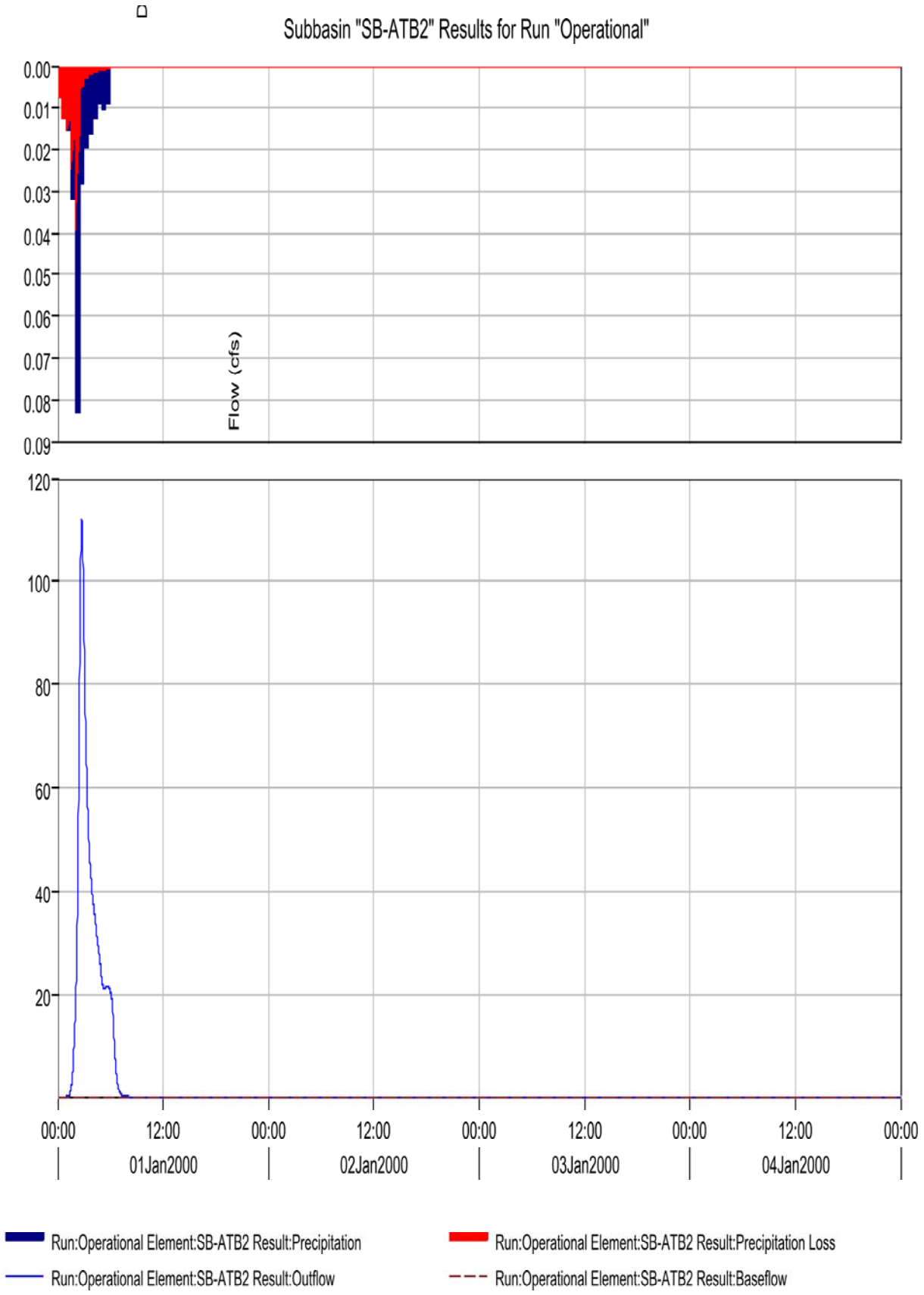

US EPA ARCHIVE DOCUMENT

Project: GRHH

Simulation Run: Operational Reservoir: ATB2

Start of Run:	01Jan2000, 00:00	Basin Model:	Green River Station - Normal
End of Run:	05Jan2000, 00:00	Meteorologic Model:	NRCS 6-Hr
Compute Time:	14Jul2011, 13:21:04	Control Specifications:	NRCS 6-Hr

Volume Units: IN

Computed Results

Peak Inflow :	130.8 (CFS)	Date/Time of Peak Inflow :	01Jan2000, 02:45
Peak Outflow :	34.6 (CFS)	Date/Time of Peak Outflow :	01Jan2000, 07:11
Total Inflow :	9.03 (IN)	Peak Storage :	18.9 (AC-FT)
Total Outflow :	8.55 (IN)	Peak Elevation :	398.7 (FT)

US EPA ARCHIVE DOCUMENT

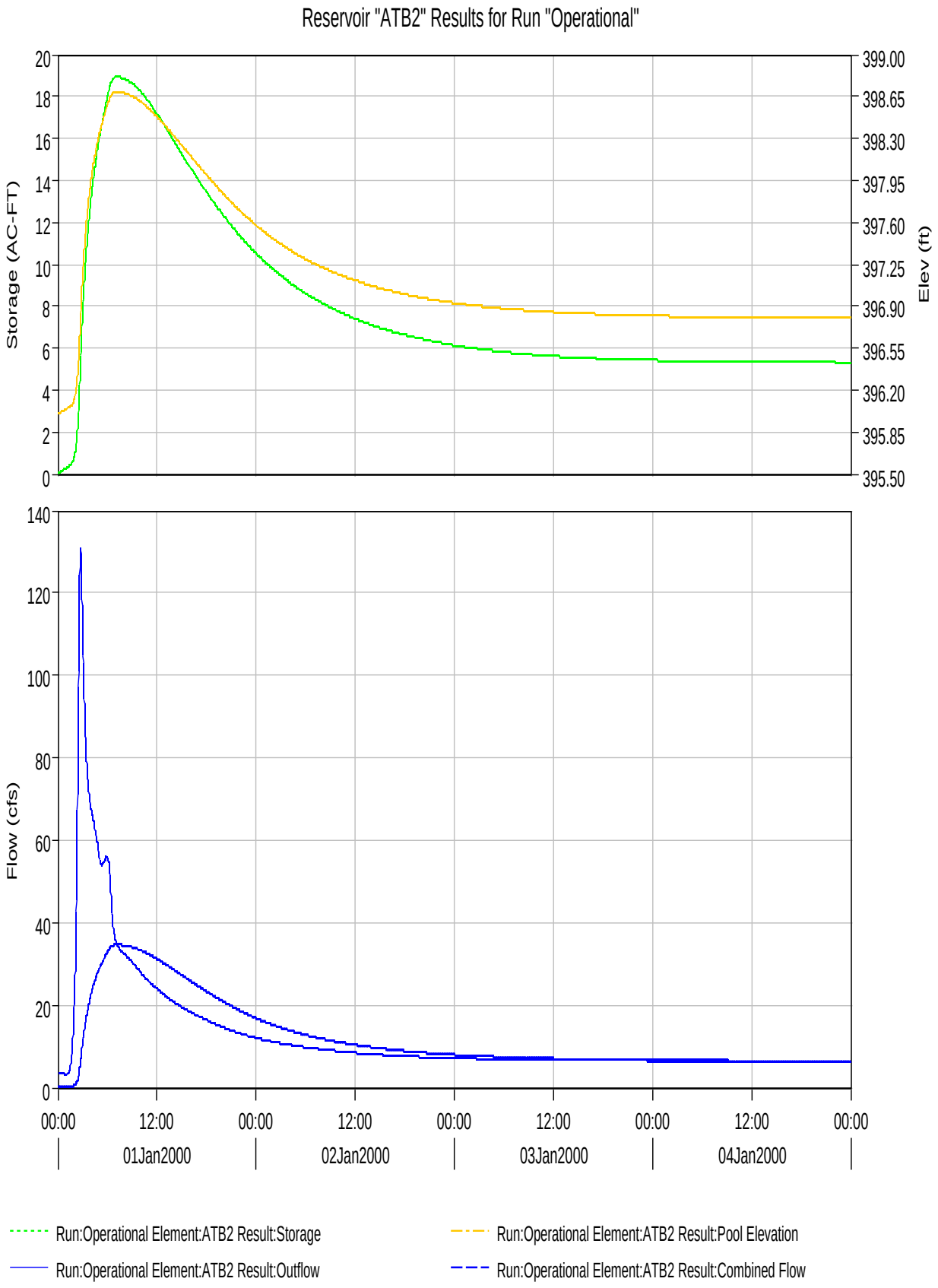

US EPA ARCHIVE DOCUMENT

US EPA ARCHIVE DOCUMENT

Appendix H: SITES Output

```
        GReponds2011
Site Identification     ATB2
Watershed Runoff Curve Number   76.
Total Watershed Drainage Area (Sq.Miles)        0.21
Watershed Time of Concentration (Hours) 0.67
SDH Rainfall Total (Inches)     4.80
SDH Rainfall Duration (Hours)   6.0
FBH or Storm Rainfall Total (Inches)    7.66
FBH or Storm Rainfall Duration (Hours)  6.0
SDH Inflow Peak (CFS)   79.3
FBH or Storm Inflow Peak (CFS)  148.6
Initial Reservoir Elevation (Feet)      398.41
Maximum WS SDH (Feet)   399.82
Maximum WS FBH or Storm (Feet)  400.45
Storage at Max. WS FBH or Storm (Acre-Ft)       37.9
Top Dam (Feet)  400.45
Storage, Top Dam (Acre-Ft)      38.0
PS Crest (Feet) 398.00
PS Number of Conduits   1
PS Conduit Diameter (Inches)    30.0
PS Conduit Area (Sq. Feet)      4.91
Storage, PS Crest (Acre-Ft)     13.
PS Discharge for SDH (CFS)      22.8
PS Discharge FBH or Storm (CFS) 35.6
Uncontrolled Drainage Area (Sq.Miles)   0.06
Number of Errors        0
Number of Warnings      8
```

US EPA ARCHIVE DOCUMENT

```
-------------------------------------------------------------
 ** CONTROL FILE SEGMENT LIST **
 SAVMOV    101  1                                                  1
 *         Main Ash Pond - ATB1
 STRUCTURE ATB1      ATB1 Principal Spillway
                     445.00    10.92                        0.00
                     445.25    11.40
                     445.50    11.86
                     445.59    17.33
                     446.00    22.87
                     448.00    30.33              0.00
                     449.00    33.28              0.01
 ENDTABLE
 WSDATA    5S A12    81        0.1       0.54
 BASEFLOW            41.18
 PDIRECT                                4.80      7.66
 POOLDATA  ELEV                447.58                                SC
 PSINLET             1.00      5.00
 PSDATA    1.00      311.50    36.00              0.013     429.16
 GO,DESIGN QL                  6                            447.58
 SAVMOV    2    101  6                   ATB1

-------------------------------------------------------------

1SITES XEQ 07/15/2011 ------------- COMMENT PAGE -------------------------------
       VER 2005.1.04         Green River Eponds HH Analysis        WSID = GR


 Main Ash Pond - ATB1


1SITES ---------------------------------------------------------------------
 XEQ 07/15/2011         Green River Eponds HH Analysis            WSID= GR
 VER 2005.1.04               ATB1 Principal Spillway               SUBW= A1
 TIME 10:35:17            SITE = ATB1              PASS=    1     PART=   6


 ****************************    BASIC DATA    *********************************
 CLIMATE AREA - NOT DEFINED                        DESIGN CLASS  S = USER DEFINED

 STORM DISTRIBUTION USED FOR AUXILIARY SPILLWAY IS;
 NRCS DESIGN STORM RAINFALL DISTRIBUTION  (CHAPTER 21, NEH4 & TR-60).

 PRECIP. - Q-PS,1-DAY    Q-PS,10-DAY       P-SD           P-FB
               0.00          0.00          4.80           7.66

 WSDATA -       CN          DA-SM          TC/L            -/H           QRF
              81.00          0.10          0.54           0.00          0.00

 SITEDATA- PERM POOL     CREST PS        FP SED        VALLEY FL         378?
               0.00        447.58          0.00           0.00            NO

           BASEFLOW      INITIAL EL     EXTRA VOL      SITE TYPE
              41.18          0.00          0.00        EXISTING

 PSDATA -  NO. COND        COND L         DIA/W            -/H
               1.00        311.50         36.00           0.00

               PS N            KE        WEIR L         TW EL
              0.013          1.00          5.00         429.16

            2ND STG         ORF H          ORF L      START AUX.
               0.00          0.00          0.00         447.58

 ASCRESTS -   AUX.1         AUX.2         AUX.3          AUX.4          AUX.5
```


US EPA ARCHIVE DOCUMENT

```
            404.00          0.00          0.00          0.00          0.00

 AUX.DATA -  REF.NO.    RETARD. Ci   TIE STATION    INLET LENGTH
                  0          0.00          0.00              0

 AUX.DATA - INLET N     SIDE SLOPE       EXIT N      EXIT SLOPE     ACTUAL AUX?
              0.000          0.00         0.000          0.000            NO

 BTM WIDTH -    BW1           BW2           BW3           BW4           BW5
               0.00          0.00          0.00          0.00          0.00


1SITES ---------------------------------------------------------------------
 XEQ 07/15/2011         Green River Eponds HH Analysis            WSID= GR
 VER 2005.1.04               ATB1 Principal Spillway                SUBW= A1
 TIME 10:35:17            SITE = ATB1              PASS=    1     PART=   7


 CREST PS        447.58 FT      56.0 ACFT     28.76 AC       0.0 CFS

 SED ACCUM       447.58 FT      56.0 ACFT     28.76 AC       0.0 CFS

 BASEFLOW        447.99 FT      68.1 ACFT     30.29 AC       4.1 CFS

 START ELEV      447.99 FT      68.1 ACFT     30.29 AC       4.1 CFS


 ******************************************************************************
 RATING TABLE DEVELOPED, SITE = ATB1 :
  WITH PS AND AUX. GIVEN - NO ASDATA RECORD GIVEN.


 RATING TABLE NUMBER  1
        ELEV.    Q-TOTAL    Q-PS     Q-AUX.    VOLUME     AREA
        FEET       CFS       CFS       CFS      AC-FT     ACRE
   1   447.58      0.00      0.00      0.00     56.04     28.76
   2   447.74      0.97      0.97      0.00     60.63     29.35
   3   447.90      2.75      2.75      0.00     65.30     29.94
   4   448.05      5.05      5.05      0.00     70.07     30.49
   5   448.21      7.77      7.77      0.00     74.92     30.95
   6   448.37     10.86     10.86      0.00     79.84     31.42
   7   448.53     14.28     14.28      0.00     84.83     31.88
   8   448.68     17.99     17.99      0.00     89.90     32.35
   9   448.84     21.98     21.98      0.00     95.04     32.81
  10   449.00     26.23     26.23      0.00    100.26     33.28
                                              FULL CONDUIT FLOW, ELEV =  451.72 FT

 ***** WARNING - CREST OF AUXILIARY SPILLWAY  404.00 IS BELOW START ROUTING
                 ELEVATION  447.99.


 ***** MESSAGE - INPUT( 404.00) TO INTERPOLATION ROUTINE IS BELOW
                 ARRAY LIMIT( 445.00).


1SITES ---------------------------------------------------------------------
 XEQ 07/15/2011         Green River Eponds HH Analysis            WSID= GR
 VER 2005.1.04               ATB1 Principal Spillway                SUBW= A1
 TIME 10:35:17            SITE = ATB1              PASS=    1     PART=   8


 ***** WARNING - INTERPOLATION ERROR - VALUES WERE THE SAME IN DENOMINATOR.
                 CHECK INPUT, THE VALUES USED WERE    0.00000 AND    0.00000.

 AUX. CREST      404.00 FT    1166.0 ACFT     10.92 AC       0.0 CFS
```


US EPA ARCHIVE DOCUMENT

```
     PS STORAGE   1110.0 ACFT,  BETWEEN AUX. CREST AND SED. ACCUM ELEVATIONS.

START ELEV      447.99 FT      68.1 ACFT     30.29 AC       4.1 CFS

ELEVATION OF LOW POINT IS ZERO.  NO CRITERIA CHECK MADE FOR
STRUCTURE CLASSIFICATION.

NRCS-SDH      D=   6.00 HR    P=  4.80 IN     Q=  2.81 IN      DA=   0.10 SM
             TC=   0.54 HR   CN=  81.00     VOL=     17.2 ACFT

     PEAK =       127.0 CFS, AT    2.7 HRS.

NRCS-FBH      D=   6.00 HR    P=  7.66 IN     Q=  5.42 IN      DA=   0.10 SM
             TC=   0.54 HR   CN=  81.00     VOL=     31.3 ACFT

     PEAK =       247.1 CFS, AT    2.7 HRS.

***** WARNING - ELEVATION OF FULL PIPE FLOW ( 451.72) EQUALS OR EXCEEDS
                GIVEN CREST ELEVATION ON STRUCTURE TABLE ( 404.00).
                PS RATING NOT COMPUTED, PASS STOPPED.


***** MESSAGE - INPUT(   0.00) TO INTERPOLATION ROUTINE IS BELOW
                ARRAY LIMIT( 445.00).


***** MESSAGE - INPUT(   0.00) TO INTERPOLATION ROUTINE IS BELOW
                ARRAY LIMIT( 445.00).


***** MESSAGE - INPUT(   0.00) TO INTERPOLATION ROUTINE IS BELOW
                ARRAY LIMIT( 445.00).


***** MESSAGE - INPUT(   0.00) TO INTERPOLATION ROUTINE IS BELOW
                ARRAY LIMIT( 445.00).


***** MESSAGE - INPUT(   0.00) TO INTERPOLATION ROUTINE IS BELOW
                ARRAY LIMIT( 445.00).


***** MESSAGE - INPUT(   0.00) TO INTERPOLATION ROUTINE IS BELOW
                ARRAY LIMIT( 445.00).


***** MESSAGE - INPUT(   0.00) TO INTERPOLATION ROUTINE IS BELOW
                ARRAY LIMIT( 445.00).


***** MESSAGE - INPUT(   0.00) TO INTERPOLATION ROUTINE IS BELOW
                ARRAY LIMIT( 445.00).


***** MESSAGE - INPUT(   0.00) TO INTERPOLATION ROUTINE IS BELOW
                ARRAY LIMIT( 445.00).


*******************************************************************************
RATING TABLE DEVELOPED, SITE = ATB1 :
```


US EPA ARCHIVE DOCUMENT

WITH PS AND AUX. GIVEN - NO ASDATA RECORD GIVEN.

```
***** MESSAGE - INPUT(   0.00) TO INTERPOLATION ROUTINE IS BELOW
                ARRAY LIMIT( 447.58).

***** MESSAGE - INPUT(   0.00) TO INTERPOLATION ROUTINE IS BELOW
                ARRAY LIMIT( 447.58).

***** MESSAGE - INPUT(   0.00) TO INTERPOLATION ROUTINE IS BELOW
                ARRAY LIMIT( 447.58).

***** MESSAGE - INPUT(   0.00) TO INTERPOLATION ROUTINE IS BELOW
                ARRAY LIMIT( 447.58).

***** MESSAGE - INPUT(   0.00) TO INTERPOLATION ROUTINE IS BELOW
                ARRAY LIMIT( 447.58).

***** MESSAGE - INPUT(   0.00) TO INTERPOLATION ROUTINE IS BELOW
                ARRAY LIMIT( 447.58).

***** MESSAGE - INPUT(   0.00) TO INTERPOLATION ROUTINE IS BELOW
                ARRAY LIMIT( 447.58).

***** MESSAGE - INPUT(   0.00) TO INTERPOLATION ROUTINE IS BELOW
                ARRAY LIMIT( 447.58).

***** MESSAGE - INPUT(   0.00) TO INTERPOLATION ROUTINE IS BELOW
                ARRAY LIMIT( 447.58).

***** MESSAGE - INPUT(   0.00) TO INTERPOLATION ROUTINE IS BELOW
                ARRAY LIMIT( 447.58).
```

RATING TABLE NUMBER 2

	ELEV. FEET	Q-TOTAL CFS	Q-PS CFS	Q-AUX. CFS	VOLUME AC-FT	AREA ACRE
1	447.58	0.00	0.00	0.00	56.04	28.76
2	447.74	0.97	0.97	0.00	60.63	29.35
3	447.90	2.75	2.75	0.00	65.30	29.94
4	448.05	5.05	5.05	0.00	70.07	30.49
5	448.21	7.77	7.77	0.00	74.92	30.95
6	448.37	10.86	10.86	0.00	79.84	31.42
7	448.53	14.28	14.28	0.00	84.83	31.88
8	448.68	17.99	17.99	0.00	89.90	32.35
9	448.84	21.98	21.98	0.00	95.04	32.81
10	449.00	26.23	26.23	0.00	100.26	33.28
11	0.00	0.00	0.00	0.00	0.00	10.92
12	0.00	0.00	0.00	0.00	0.00	10.92
13	0.00	0.00	0.00	0.00	0.00	10.92
14	0.00	0.00	0.00	0.00	0.00	10.92
15	0.00	0.00	0.00	0.00	0.00	10.92
16	0.00	0.00	0.00	0.00	0.00	10.92
17	0.00	0.00	0.00	0.00	0.00	10.92
18	0.00	0.00	0.00	0.00	0.00	10.92
19	0.00	0.00	0.00	0.00	0.00	10.92

US EPA ARCHIVE DOCUMENT

```
 20     0.00      0.00      0.00      0.00      0.00     10.92
                                          FULL CONDUIT FLOW, ELEV =  451.72 FT

ROUTED       BTM WIDTH  MAX ELEV   VOL-MAX  AREA-MAX   AUX.-HP   VOL-AUX.
RESULTS          FT        FT        ACFT      AC         FT       ACFT
NRCS-SDH           0.0    448.41      81.1      31.5      0.00       0.0

***** MESSAGE - ROUTING ONLY: NO AUXILIARY SPILLWAY ANALYSIS

          PEAK - CFS        Q-PS     Q-AUX.    Q-TOT.
          DISCHARGE  =      11.8       0.0      11.8

ROUTED       BTM WIDTH  MAX ELEV   VOL-MAX  AREA-MAX   AUX.-HP   VOL-AUX.
RESULTS          FT        FT        ACFT      AC         FT       ACFT
NRCS-FBH           0.0    448.77      92.8      32.6      0.00       0.0

***** MESSAGE - ROUTING ONLY: NO AUXILIARY SPILLWAY ANALYSIS

          PEAK - CFS        Q-PS     Q-AUX.    Q-TOT.
          DISCHARGE  =      20.2       0.0      20.2

Inflow Hyd 1 SDH-Peak =         11.76 CFS  at    6.42 hrs.,  Location Point

Inflow Hyd 1 FBH-Peak =         20.21 CFS  at    6.40 hrs.,  Location Point
HYDOUT   6     ATB1
```

US EPA ARCHIVE DOCUMENT

```
-------------------------------------------------------------
 ** CONTROL FILE SEGMENT LIST **
 SAVMOV    101  1                                                    1
 *         Coal Pile Runoff Pond - CPP
 STRUCTURE CPP       CPP Principal Spillway Structure
                     400.00    1.22      0.00                0.00
                     401.61    1.95      1.95
                     402.00    2.11      5.20
                     404.00    4.51      12.15     0.00
                     405.00    4.98      14.42     0.01
 ENDTABLE
 WSDATA    5S CP2    84        .019      0.15
 BASEFLOW            68.07
 PDIRECT                                 4.80      7.66
 POOLDATA  ELEV                400.00
 GO,DESIGN QL                  6                             404.00
 SAVMOV    2    101  5                   CPP

-------------------------------------------------------------

1SITES XEQ 07/15/2011 ------------- COMMENT PAGE -------------------------------
       VER 2005.1.04         Green River Eponds HH Analysis        WSID = GR


 Coal Pile Runoff Pond - CPP


1SITES ---------------------------------------------------------------------------
 XEQ 07/15/2011         Green River Eponds HH Analysis            WSID= GR
 VER 2005.1.04           CPP Principal Spillway Structure           SUBW= CP
 TIME 10:35:17            SITE = CPP               PASS=    1     PART=   3


 ****************************    BASIC DATA    *********************************
 CLIMATE AREA - NOT DEFINED                        DESIGN CLASS  S = USER DEFINED

 STORM DISTRIBUTION USED FOR AUXILIARY SPILLWAY IS;
 NRCS DESIGN STORM RAINFALL DISTRIBUTION  (CHAPTER 21, NEH4 & TR-60).

 PRECIP. - Q-PS,1-DAY    Q-PS,10-DAY       P-SD           P-FB
               0.00          0.00          4.80           7.66

 WSDATA -       CN          DA-SM          TC/L            -/H           QRF
              84.00          0.02          0.15           0.00          0.00

 SITEDATA- PERM POOL     CREST PS        FP SED        VALLEY FL         378?
               0.00        400.00          0.00           0.00            NO

           BASEFLOW      INITIAL EL     EXTRA VOL      SITE TYPE
              68.07          0.00          0.00        EXISTING

 PSDATA -  NO. COND        COND L         DIA/W            -/H
               0.00          0.00          0.00           0.00

               PS N            KE         WEIR L         TW EL
              0.000          0.00          0.00           0.00

            2ND STG         ORF H          ORF L      START AUX.
               0.00          0.00          0.00         404.00

 ASCRESTS -   AUX.1         AUX.2         AUX.3          AUX.4          AUX.5
               0.00          0.00          0.00           0.00          0.00

 AUX.DATA -  REF.NO.    RETARD. Ci   TIE STATION    INLET LENGTH
                  0          0.00          0.00              0
```


US EPA ARCHIVE DOCUMENT

```
 AUX.DATA - INLET N     SIDE SLOPE       EXIT N      EXIT SLOPE     ACTUAL AUX?
              0.000          0.00         0.000          0.000            NO

 BTM WIDTH -    BW1           BW2           BW3            BW4           BW5
               0.00          0.00          0.00           0.00          0.00


1SITES ---------------------------------------------------------------------
 XEQ 07/15/2011         Green River Eponds HH Analysis            WSID= GR
 VER 2005.1.04           CPP Principal Spillway Structure           SUBW= CP
 TIME 10:35:17            SITE = CPP               PASS=    1     PART=   4


 CREST PS        400.00 FT       0.0 ACFT      1.22 AC       0.0 CFS

 SED ACCUM       400.00 FT       0.0 ACFT      1.22 AC       0.0 CFS

 BASEFLOW        401.14 FT       1.7 ACFT      1.74 AC       1.3 CFS

 START ELEV      404.00 FT      10.0 ACFT      4.51 AC      12.1 CFS


 ******************************************************************************
 RATING TABLE DEVELOPED, SITE = CPP  :
  WITH PS AND AUX. GIVEN - NO ASDATA RECORD GIVEN.


 RATING TABLE NUMBER  1
        ELEV.    Q-TOTAL    Q-PS     Q-AUX.    VOLUME     AREA
        FEET       CFS       CFS       CFS      AC-FT     ACRE
   1   400.00      0.00      0.00      0.00      0.00      1.22
   2   401.61      1.95      1.95      0.00      2.55      1.95
   3   402.00      5.20      5.20      0.00      3.34      2.11
   4   404.00     12.15     12.15      0.00      9.96      4.51
   5   405.00     14.43     14.42      0.01     14.71      4.98

 UNCONTROLLED AREA HYDROGRAPH -  SDH PEAK         =     34.77 CFS
                                     TIME TO PEAK =      2.43 HRS,  SITE  CPP
                                     VOLUME       =      3.71 ACFT

 ADDHYD RESULTS STAB. DESIGN HYD. -  PEAK         =     49.48 CFS
                                     TIME TO PEAK =      2.45 HRS,  SITE  CPP
                                     VOLUME       =      5.26 ACFT

 UNCONTROLLED AREA HYDROGRAPH -  FBH PEAK         =     63.14 CFS
                                     TIME TO PEAK =      2.42 HRS,  SITE  CPP
                                     VOLUME       =      6.46 ACFT

 ADDHYD RESULTS FREEBOARD HYD. -     PEAK         =     93.78 CFS
                                     TIME TO PEAK =      2.44 HRS,  SITE  CPP
                                     VOLUME       =      9.60 ACFT


1SITES ---------------------------------------------------------------------
 XEQ 07/15/2011         Green River Eponds HH Analysis            WSID= GR
 VER 2005.1.04           CPP Principal Spillway Structure           SUBW= CP
 TIME 10:35:17            SITE = CPP               PASS=    1     PART=   5


 AUX. CREST      404.00 FT      10.0 ACFT      4.51 AC      12.1 CFS

      PS STORAGE     10.0 ACFT,  BETWEEN AUX. CREST AND SED. ACCUM ELEVATIONS.

 START ELEV      404.00 FT      10.0 ACFT      4.51 AC      12.1 CFS
```


US EPA ARCHIVE DOCUMENT

```
ELEVATION OF LOW POINT IS ZERO.  NO CRITERIA CHECK MADE FOR
STRUCTURE CLASSIFICATION.

NRCS-SDH      D=   6.00 HR    P=  4.80 IN     Q=  3.09 IN      DA=   0.02 SM
             TC=   0.15 HR   CN=  84.00     VOL=      3.7 ACFT

     PEAK =        49.5 CFS, AT    2.5 HRS.
     ACCUMULATED SYSTEM DRAINAGE AREA =   0.03 SQUARE MILES.

NRCS-FBH      D=   6.00 HR    P=  7.66 IN     Q=  5.77 IN      DA=   0.02 SM
             TC=   0.15 HR   CN=  84.00     VOL=      6.5 ACFT

     PEAK =        93.8 CFS, AT    2.4 HRS.
     ACCUMULATED SYSTEM DRAINAGE AREA =   0.03 SQUARE MILES.


*******************************************************************************
RATING TABLE DEVELOPED, SITE = CPP  :
 WITH PS AND AUX. GIVEN - NO ASDATA RECORD GIVEN.


RATING TABLE NUMBER  2
       ELEV.    Q-TOTAL    Q-PS     Q-AUX.    VOLUME     AREA
       FEET       CFS       CFS       CFS      AC-FT     ACRE
  1   400.00      0.00      0.00      0.00      0.00      1.22
  2   401.61      1.95      1.95      0.00      2.55      1.95
  3   402.00      5.20      5.20      0.00      3.34      2.11
  4   404.00     12.15     12.15      0.00      9.96      4.51
  5   405.00     14.43     14.42      0.01     14.71      4.98

ROUTED       BTM WIDTH  MAX ELEV   VOL-MAX  AREA-MAX   AUX.-HP   VOL-AUX.
RESULTS          FT        FT        ACFT      AC         FT       ACFT
NRCS-SDH           0.0    404.19      10.8       4.6      0.19       0.9

***** MESSAGE - ROUTING ONLY: NO AUXILIARY SPILLWAY ANALYSIS

          PEAK - CFS        Q-PS     Q-AUX.    Q-TOT.
          DISCHARGE  =      12.6       0.0      12.6

ROUTED       BTM WIDTH  MAX ELEV   VOL-MAX  AREA-MAX   AUX.-HP   VOL-AUX.
RESULTS          FT        FT        ACFT      AC         FT       ACFT
NRCS-FBH           0.0    404.82      13.8       4.9      0.82       3.8

***** MESSAGE - ROUTING ONLY: NO AUXILIARY SPILLWAY ANALYSIS

          PEAK - CFS        Q-PS     Q-AUX.    Q-TOT.
          DISCHARGE  =      14.0       0.0      14.0

Inflow Hyd 1 SDH-Peak =         12.56 CFS  at    3.40 hrs.,  Location Point

Inflow Hyd 1 FBH-Peak =         13.99 CFS  at    4.65 hrs.,  Location Point
HYDOUT   5     CPP
```

US EPA ARCHIVE DOCUMENT

```
-------------------------------------------------------------
 ** CONTROL FILE SEGMENT LIST **
 SAVMOV    101  1                                                    1
 *         Scrubber Pond - SP
 STRUCTURE SP        SP Principal Spillway Structure
                     396.00    3.25      0.00                0.00
                     398.00    4.66      1.030
                     398.84    5.73      1.040
                     400.00    6.16      1.050
                     402.00    7.49      1.056     0.00
                     404.00    9.67      1.060     0.01
 ENDTABLE
 WSDATA    5S SP2    88        0.016     0.39
 PDIRECT                                 4.80      7.66
 POOLDATA  ELEV                396.00
 GO,DESIGN QL                  6                             402.50
 SAVMOV    2    101  7                   SP

-------------------------------------------------------------

1SITES XEQ 07/15/2011 ------------- COMMENT PAGE -------------------------------
       VER 2005.1.04         Green River Eponds HH Analysis        WSID = GR


 Scrubber Pond - SP

 ***** WARNING - PSDATA AND ASSOCIATED INLET DATA ARE OVERRIDDEN BY PS RATING
                 DATA ENTERED IN THE STRUCTURE TABLE.


1SITES ---------------------------------------------------------------------
 XEQ 07/15/2011         Green River Eponds HH Analysis            WSID= GR
 VER 2005.1.04           SP Principal Spillway Structure            SUBW= SP
 TIME 10:35:17            SITE = SP                PASS=    1     PART=   9


 ****************************    BASIC DATA    *********************************
 CLIMATE AREA - NOT DEFINED                        DESIGN CLASS  S = USER DEFINED

 STORM DISTRIBUTION USED FOR AUXILIARY SPILLWAY IS;
 NRCS DESIGN STORM RAINFALL DISTRIBUTION  (CHAPTER 21, NEH4 & TR-60).

 PRECIP. - Q-PS,1-DAY    Q-PS,10-DAY       P-SD           P-FB
               0.00          0.00          4.80           7.66

 WSDATA -       CN          DA-SM          TC/L            -/H           QRF
              88.00          0.02          0.39           0.00          0.00

 SITEDATA- PERM POOL     CREST PS        FP SED        VALLEY FL         378?
               0.00        396.00          0.00           0.00            NO

           BASEFLOW      INITIAL EL     EXTRA VOL      SITE TYPE
              41.18          0.00          0.00        EXISTING

 PSDATA -  NO. COND        COND L         DIA/W            -/H
               1.00        311.50         36.00           0.00

               PS N            KE         WEIR L         TW EL
              0.013          1.00          5.00         429.16

            2ND STG         ORF H          ORF L      START AUX.
               0.00          0.00          0.00         402.50

 ASCRESTS -   AUX.1         AUX.2         AUX.3          AUX.4          AUX.5
             404.00          0.00          0.00           0.00          0.00
```


US EPA ARCHIVE DOCUMENT

```
 AUX.DATA -  REF.NO.    RETARD. Ci   TIE STATION    INLET LENGTH
                  0          0.00          0.00              0

 AUX.DATA - INLET N     SIDE SLOPE       EXIT N      EXIT SLOPE     ACTUAL AUX?
              0.000          0.00         0.000          0.000            NO

 BTM WIDTH -    BW1           BW2           BW3            BW4           BW5
               0.00          0.00          0.00           0.00          0.00


1SITES ---------------------------------------------------------------------
 XEQ 07/15/2011         Green River Eponds HH Analysis            WSID= GR
 VER 2005.1.04           SP Principal Spillway Structure            SUBW= SP
 TIME 10:35:17            SITE = SP                PASS=    1     PART=  10


 CREST PS        396.00 FT       0.0 ACFT      3.25 AC       0.0 CFS

 SED ACCUM       396.00 FT       0.0 ACFT      3.25 AC       0.0 CFS

 BASEFLOW        397.36 FT       5.1 ACFT      4.21 AC       0.7 CFS

 START ELEV      402.50 FT      36.7 ACFT      8.03 AC       1.1 CFS


 ***************************************************************************
 RATING TABLE DEVELOPED, SITE = SP   :
  WITH PS AND AUX. GIVEN - NO ASDATA RECORD GIVEN.


 RATING TABLE NUMBER  1
        ELEV.    Q-TOTAL    Q-PS     Q-AUX.    VOLUME     AREA
        FEET       CFS       CFS       CFS      AC-FT     ACRE
   1   396.00      0.00      0.00      0.00      0.00      3.25
   2   398.00      1.03      1.03      0.00      7.91      4.66
   3   398.84      1.04      1.04      0.00     12.27      5.73
   4   400.00      1.05      1.05      0.00     19.17      6.16
   5   402.00      1.06      1.06      0.00     32.82      7.49
   6   404.00      1.07      1.06      0.01     49.98      9.67


1SITES ---------------------------------------------------------------------
 XEQ 07/15/2011         Green River Eponds HH Analysis            WSID= GR
 VER 2005.1.04           SP Principal Spillway Structure            SUBW= SP
 TIME 10:35:17            SITE = SP                PASS=    1     PART=  11


 AUX. CREST      404.00 FT      50.0 ACFT      9.67 AC       1.1 CFS

      PS STORAGE     50.0 ACFT,  BETWEEN AUX. CREST AND SED. ACCUM ELEVATIONS.

 START ELEV      402.50 FT      36.7 ACFT      8.03 AC       1.1 CFS

 ELEVATION OF LOW POINT IS ZERO.  NO CRITERIA CHECK MADE FOR
 STRUCTURE CLASSIFICATION.

 NRCS-SDH      D=   6.00 HR    P=  4.80 IN     Q=  3.48 IN      DA=   0.02 SM
              TC=   0.39 HR   CN=  88.00     VOL=      3.3 ACFT

      PEAK =        28.2 CFS, AT    2.6 HRS.

 NRCS-FBH      D=   6.00 HR    P=  7.66 IN     Q=  6.24 IN      DA=   0.02 SM
              TC=   0.39 HR   CN=  88.00     VOL=      5.7 ACFT
```


US EPA ARCHIVE DOCUMENT

```
     PEAK =        49.6 CFS, AT    2.6 HRS.

 ******************************************************************************
 RATING TABLE DEVELOPED, SITE = SP   :
  WITH PS AND AUX. GIVEN - NO ASDATA RECORD GIVEN.


 RATING TABLE NUMBER  2
        ELEV.    Q-TOTAL    Q-PS     Q-AUX.    VOLUME     AREA
        FEET       CFS       CFS       CFS      AC-FT     ACRE
   1   396.00      0.00      0.00      0.00      0.00      3.25
   2   398.00      1.03      1.03      0.00      7.91      4.66
   3   398.84      1.04      1.04      0.00     12.27      5.73
   4   400.00      1.05      1.05      0.00     19.17      6.16
   5   402.00      1.06      1.06      0.00     32.82      7.49
   6   404.00      1.07      1.06      0.01     49.98      9.67

 ROUTED       BTM WIDTH  MAX ELEV   VOL-MAX  AREA-MAX   AUX.-HP   VOL-AUX.
 RESULTS          FT        FT        ACFT      AC         FT       ACFT
 NRCS-SDH           0.0    402.84      39.5       8.4      0.00       0.0

 ***** MESSAGE - ROUTING ONLY: NO AUXILIARY SPILLWAY ANALYSIS

           PEAK - CFS        Q-PS     Q-AUX.    Q-TOT.
           DISCHARGE  =       1.1       0.0       1.1

 ROUTED       BTM WIDTH  MAX ELEV   VOL-MAX  AREA-MAX   AUX.-HP   VOL-AUX.
 RESULTS          FT        FT        ACFT      AC         FT       ACFT
 NRCS-FBH           0.0    403.11      41.8       8.7      0.00       0.0

 ***** MESSAGE - ROUTING ONLY: NO AUXILIARY SPILLWAY ANALYSIS

           PEAK - CFS        Q-PS     Q-AUX.    Q-TOT.
           DISCHARGE  =       1.1       0.0       1.1

 Inflow Hyd 1 SDH-Peak =          1.06 CFS  at    6.47 hrs.,  Location Point

 Inflow Hyd 1 FBH-Peak =          1.06 CFS  at    6.56 hrs.,  Location Point
HYDOUT   7     SP
```

US EPA ARCHIVE DOCUMENT

```
*******************************************************************************
SITES XEQ 07/15/2011   WATER RESOURCE SITE ANALYSIS COMPUTER PROGRAM
     VER 2005.1.04              (USER MANUAL - DATED DECEMBER 2005)
     TIME 15:18:29

************************** 80-80 LIST OF INPUT DATA **************************

SITES     01/01/2005GR        Green River Eponds HH Analysis0.209     B2
SAVMOV    0    101
SAVMOV    101  1                                                      2
*         Northernmost (N) drainage area directly west of ATB1 and
*         North of southern (S) drainage area.
WSDATA    5S A61    72        0.008     0.26
PDIRECT                                 4.80      7.66
GO,DESIGN                     6
SAVMOV    2    101  9                   A6
SAVMOV    101  1                                                      2
*         Southern (S) drainage area directly north of CPP and south
*         of ATB1.
WSDATA    5S A51    86        0.004     0.17
PDIRECT                                 4.80      7.66
GO,DESIGN                     6
SAVMOV    2    101  8                   A5
SAVMOV    101  1                                                      1
*         Coal Pile Runoff Pond - CPP
STRUCTURE CPP       CPP Principal Spillway Structure
                    400.00    1.22      0.00                0.00
                    401.61    1.95      1.95
                    402.00    2.11      5.20
                    404.00    4.51      12.15     0.00
                    405.00    4.98      14.42     0.01
ENDTABLE
WSDATA    5S CP2    84        .019      0.15
BASEFLOW            68.07
PDIRECT                                 4.80      7.66
POOLDATA  ELEV                400.00
GO,DESIGN QL                  6                             404.00
SAVMOV    2    101  5                   CPP
SAVMOV    0    101
SAVMOV    101  1                                                      1
*         Main Ash Pond - ATB1
STRUCTURE ATB1      ATB1 Principal Spillway
                    445.00    10.92                         0.00
                    445.25    11.40
                    445.50    11.86
                    445.59    17.33
                    446.00    22.87
                    448.00    30.33               0.00
                    449.00    33.28               0.01
ENDTABLE
WSDATA    5S A12    81        0.1       0.54
BASEFLOW            41.18
PDIRECT                                 4.80      7.66
POOLDATA  ELEV                447.58                                SC
PSINLET             1.00      5.00
PSDATA    1.00      311.50    36.00               0.013     429.16
GO,DESIGN QL                  6                             447.58
SAVMOV    2    101  6                   ATB1
SAVMOV    0    101
SAVMOV    101  1                                                      1
*         Scrubber Pond - SP
STRUCTURE SP        SP Principal Spillway Structure
                    396.00    3.25      0.00                0.00
                    398.00    4.66      1.030
                    398.84    5.73      1.040
```

US EPA ARCHIVE DOCUMENT

```
                    400.00    6.16      1.050
                    402.00    7.49      1.056     0.00
                    404.00    9.67      1.060     0.01
ENDTABLE
WSDATA    5S SP2    88        0.016     0.39
PDIRECT                                 4.80      7.66
POOLDATA  ELEV                396.00
GO,DESIGN QL                  6                                 402.50
SAVMOV    2    101  7                   SP
ADDMOV
ADDMOV    2                   J1                                          4
SAVMOV    101  1                                                          1
*         Secondary Ash Pond - ATB2
STRUCTURE ATB2      ATB2 Principal Spillway Structure
                    396.00    6.54                              0.00
                    396.25    6.58
                    396.50    6.63
                    396.75    6.68
                    397.00    6.72
                    397.25    6.76
                    397.50    6.81
                    397.75    6.85
                    397.85    6.86
                    398.00    7.15                0.00
                    400.00    11.67               0.01
                    400.50    13.40               0.02
ENDTABLE
WSDATA    5S A2     76        0.062     0.67
PDIRECT                                 4.80      7.66
POOLDATA  ELEV                398.00                                      SC
PSINLET             1.00      3.00
PSDATA    1.00      45.00     30.00               0.019     394.25
GRAPHICS  I
GO,DESIGN QLC                 6                                 398.00
SAVMOV    2    101  1                   ATB2
ENDJOB

-------------------------------------------------------------
** CONTROL FILE SEGMENT LIST **
SAVMOV    101  1                                                          1
*         Secondary Ash Pond - ATB2
STRUCTURE ATB2      ATB2 Principal Spillway Structure
                    396.00    6.54                              0.00
                    396.25    6.58
                    396.50    6.63
                    396.75    6.68
                    397.00    6.72
                    397.25    6.76
                    397.50    6.81
                    397.75    6.85
                    397.85    6.86
                    398.00    7.15                0.00
                    400.00    11.67               0.01
                    400.50    13.40               0.02
ENDTABLE
WSDATA    5S A2     76        0.062     0.67
PDIRECT                                 4.80      7.66
POOLDATA  ELEV                398.00                                      SC
PSINLET             1.00      3.00
PSDATA    1.00      45.00     30.00               0.019     394.25
GRAPHICS  I
GO,DESIGN QLC                 6                                 398.00
SAVMOV    2    101  1                   ATB2

-------------------------------------------------------------
```


US EPA ARCHIVE DOCUMENT

```
1SITES XEQ 07/15/2011 ------------- COMMENT PAGE -------------------------------
       VER 2005.1.04         Green River Eponds HH Analysis        WSID = GR


 Secondary Ash Pond - ATB2


1SITES ---------------------------------------------------------------------------
 XEQ 07/15/2011         Green River Eponds HH Analysis            WSID= GR
 VER 2005.1.04          ATB2 Principal Spillway Structure           SUBW= A2
 TIME 15:18:29            SITE = ATB2              PASS=    1     PART=  12


 ****************************    BASIC DATA    *********************************
 CLIMATE AREA - NOT DEFINED                        DESIGN CLASS  S = USER DEFINED

 STORM DISTRIBUTION USED FOR AUXILIARY SPILLWAY IS;
 NRCS DESIGN STORM RAINFALL DISTRIBUTION  (CHAPTER 21, NEH4 & TR-60).

 PRECIP. - Q-PS,1-DAY    Q-PS,10-DAY       P-SD           P-FB
               0.00          0.00          4.80           7.66

 WSDATA -       CN          DA-SM          TC/L            -/H           QRF
              76.00          0.06          0.67           0.00          0.00

 SITEDATA- PERM POOL     CREST PS        FP SED        VALLEY FL         378?
               0.00        398.00          0.00           0.00            NO

           BASEFLOW      INITIAL EL     EXTRA VOL      SITE TYPE
              41.18          0.00          0.00         DESIGN

 PSDATA -  NO. COND        COND L         DIA/W            -/H
               1.00         45.00         30.00           0.00

               PS N            KE         WEIR L         TW EL
              0.019          1.00          3.00         394.25

            2ND STG         ORF H          ORF L      START AUX.
               0.00          0.00          0.00         398.00

 ASCRESTS -   AUX.1         AUX.2         AUX.3          AUX.4          AUX.5
             404.00          0.00          0.00           0.00          0.00

 AUX.DATA -  REF.NO.    RETARD. Ci   TIE STATION    INLET LENGTH
                  0          0.00          0.00              0

 AUX.DATA - INLET N     SIDE SLOPE       EXIT N      EXIT SLOPE     ACTUAL AUX?
              0.000          0.00         0.000          0.000            NO

 BTM WIDTH -    BW1           BW2           BW3            BW4           BW5
               0.00          0.00          0.00           0.00          0.00

1********************     DETAILED LIST OF BASIC DATA     *********************
 WEIR COEF. FOR ORIFICES.......... 3.10    RATIO OF Ia TO S (CH.10,NEH4). 0.20
 WEIR COEF. FOR DROP INLET........ 3.10    TIME INCS TO PEAK OF UNIT HYD.  11.
 DISCHARGE COEF. FOR ORIFICES..... 0.60    NO. POINTS FOR DESIGN HYD. ... 5000

 HOOD, WEIR INLET COEF. .......... 0.60    DRAWDOWN TIME LIMIT - DAYS.... 10.0
 HOOD, PIPE ENTRANCE COEF. ....... 0.60    DRAWDOWN RATIO STORAGE LIMIT.. 0.15
 HOOD, SLUG FLOW COEF. ........... 0.00    OTHER DRAWDOWN RATIOS APPLY ?.   NO

 PS ACCURACY OF FULL FLOW CALC.,FT 0.01    WSP ALLOWABLE FSS VEL. CHANGE. 0.05
 FILLET SIZE FOR BOX CONDUITS..... 6.00    WSP FSS CALC. PRECISION, FT.. 0.005
```


US EPA ARCHIVE DOCUMENT

```
 GRAVITATIONAL CONSTANT........... 32.16    AUX. SPILLWAY MIN. CAP. COEF. 237.0
 MIN. NHCP378 PS PIPE AREA SQFT.. 0.545    AUX. SPILLWAY MIN. CAP. EXP.  0.493

 MIN. TR60 DEPTH AUX. TO TOP DAM.. 3.00    MIN. AUX. BW IN BW SOLUTION,FT 20.0
 MIN. NHCP378 DEPTH AUX.TO TOP DAM 1.00    PRECISION OF BW SOLUTION......  1.0
 MIN. NHCP378 DEPTH PS - AUX.CREST 0.50    OLD TR60 CRITERIA USED .......   NO
 MIN. NHCP378 DEPTH DESIGN Q - TOD 1.00    OLD NHCP378 CRITERIA USED ....   NO

 EMBANKMENT TEMPLATE:  TOP WIDTH = (calc.),  MAX. CROWN = 0.667 ft,
 SIDE SLOPE   WAVE BERM   MULTIPLE STABILITY BERMS    SEPARATE STABILITY BERMS
    RATIOS      WIDTH      U&D/S WIDTHS   DELTA H     WIDTHS, ft   HEIGHTS, ft
   U/S  D/S       ft            ft          ft        U/S   D/S    U/S   D/S
  2.50 2.50      10.0           0.0        0.00       0.00  0.00   0.00  0.00


 DIMENSIONLESS UNIT HYDROGRAPH
 STANDARD DIMENSIONLESS UNIT HYDROGRAPH
 PEAK FACTOR = 484.0 | TIME INC. =0.020 | NO. INC. TO PEAK =  11.
 VOLUME FACTOR =  48.3429

      0.0000     0.0300     0.1000     0.1900     0.3100
      0.4700     0.6600     0.8200     0.9300     0.9900
      1.0000     0.9900     0.9300     0.8600     0.7800
      0.6800     0.5600     0.4600     0.3900     0.3300
      0.2800     0.2410     0.2070     0.1740     0.1470
      0.1260     0.1070     0.0910     0.0770     0.0660
      0.0550     0.0470     0.0400     0.0340     0.0290
      0.0250     0.0210     0.0180     0.0150     0.0130
      0.0110     0.0090     0.0080     0.0070     0.0060
      0.0050     0.0040     0.0030     0.0020     0.0010
      0.0000


1NRCS DESIGN STORM RAINFALL DISTRIBUTION  (CHAPTER 21, NEH4 & TR-60).

       0.000      0.008      0.016      0.025      0.033
       0.043      0.052      0.063      0.074      0.086
       0.099      0.112      0.126      0.142      0.160
       0.180      0.205      0.255      0.345      0.437
       0.530      0.603      0.633      0.660      0.684
       0.705      0.724      0.742      0.759      0.775
       0.790      0.804      0.818      0.831      0.844
       0.856      0.868      0.879      0.890      0.900
       0.910      0.920      0.930      0.939      0.948
       0.957      0.966      0.975      0.983      0.992
       1.000


1SITES ---------------------------------------------------------------------------
 XEQ 07/15/2011         Green River Eponds HH Analysis            WSID= GR
 VER 2005.1.04          ATB2 Principal Spillway Structure           SUBW= A2
 TIME 15:18:29            SITE = ATB2              PASS=    1     PART=  13


 CREST PS        398.00 FT      13.5 ACFT      7.15 AC       0.0 CFS

 SED ACCUM       398.00 FT      13.5 ACFT      7.15 AC       0.0 CFS

 BASEFLOW        398.41 FT      16.6 ACFT      8.08 AC       2.6 CFS

 START ELEV      398.41 FT      16.6 ACFT      8.08 AC       2.6 CFS

 ******************************************************************************
 RATING TABLE DEVELOPED, SITE = ATB2 :
```


US EPA ARCHIVE DOCUMENT

```
 WITH PS AND AUX. GIVEN - NO ASDATA RECORD GIVEN.


RATING TABLE NUMBER  1
       ELEV.    Q-TOTAL    Q-PS     Q-AUX.    VOLUME     AREA
       FEET       CFS       CFS       CFS      AC-FT     ACRE
  1   398.00      0.00      0.00      0.00     13.45      7.15
  2   398.28      1.36      1.36      0.00     15.53      7.78
  3   398.56      3.85      3.85      0.00     17.78      8.41
  4   398.83      7.07      7.07      0.00     20.20      9.03
  5   399.11     10.89     10.89      0.00     22.79      9.66
  6   399.39     15.22     15.22      0.00     25.56     10.29
  7   399.67     20.01     20.01      0.00     28.51     10.92
  8   399.94     25.22     25.22      0.00     31.63     11.54
  9   400.22     30.81     30.81      0.00     34.95     12.44
 10   400.50     36.76     36.76      0.00     38.54     13.40
                                            FULL CONDUIT FLOW, ELEV =  401.57 FT

UNCONTROLLED AREA HYDROGRAPH -  SDH PEAK         =     59.02 CFS
                                    TIME TO PEAK =      2.78 HRS,  SITE  ATB2
                                    VOLUME       =      9.26 ACFT

ADDHYD RESULTS STAB. DESIGN HYD. -  PEAK         =     79.29 CFS
                                    TIME TO PEAK =      3.00 HRS,  SITE  ATB2
                                    VOLUME       =     54.27 ACFT

UNCONTROLLED AREA HYDROGRAPH -  FBH PEAK         =    123.96 CFS
                                    TIME TO PEAK =      2.72 HRS,  SITE  ATB2
                                    VOLUME       =     17.55 ACFT

ADDHYD RESULTS FREEBOARD HYD. -     PEAK         =    148.62 CFS
                                    TIME TO PEAK =      2.94 HRS,  SITE  ATB2
                                    VOLUME       =     80.23 ACFT


1SITES ---------------------------------------------------------------------------
 XEQ 07/15/2011         Green River Eponds HH Analysis            WSID= GR
 VER 2005.1.04          ATB2 Principal Spillway Structure           SUBW= A2
 TIME 15:18:29            SITE = ATB2              PASS=    1     PART=  14


 AUX. CREST      398.00 FT      13.5 ACFT      7.15 AC       0.0 CFS

      PS STORAGE      0.0 ACFT,  BETWEEN AUX. CREST AND SED. ACCUM ELEVATIONS.

 START ELEV      398.41 FT      16.6 ACFT      8.08 AC       2.6 CFS

 ELEVATION OF LOW POINT IS ZERO.  NO CRITERIA CHECK MADE FOR
 STRUCTURE CLASSIFICATION.

 NRCS-SDH      D=   6.00 HR    P=  4.80 IN     Q=  2.37 IN      DA=   0.06 SM
              TC=   0.67 HR   CN=  76.00     VOL=      9.3 ACFT

      PEAK =        79.3 CFS, AT    3.0 HRS.
      ACCUMULATED SYSTEM DRAINAGE AREA =   0.21 SQUARE MILES.

 NRCS-FBH      D=   6.00 HR    P=  7.66 IN     Q=  4.85 IN      DA=   0.06 SM
              TC=   0.67 HR   CN=  76.00     VOL=     17.6 ACFT

      PEAK =       148.6 CFS, AT    2.9 HRS.
      ACCUMULATED SYSTEM DRAINAGE AREA =   0.21 SQUARE MILES.

 ***** WARNING - ELEVATION OF FULL PIPE FLOW ( 401.57) EQUALS OR EXCEEDS
                 GIVEN CREST ELEVATION ON STRUCTURE TABLE ( 398.00).
                 PS RATING NOT COMPUTED, PASS STOPPED.
```


US EPA ARCHIVE DOCUMENT

```
***** MESSAGE - INPUT(   0.00) TO INTERPOLATION ROUTINE IS BELOW
                ARRAY LIMIT( 396.00).

***** MESSAGE - INPUT(   0.00) TO INTERPOLATION ROUTINE IS BELOW
                ARRAY LIMIT( 396.00).

***** MESSAGE - INPUT(   0.00) TO INTERPOLATION ROUTINE IS BELOW
                ARRAY LIMIT( 396.00).

***** MESSAGE - INPUT(   0.00) TO INTERPOLATION ROUTINE IS BELOW
                ARRAY LIMIT( 396.00).

***** MESSAGE - INPUT(   0.00) TO INTERPOLATION ROUTINE IS BELOW
                ARRAY LIMIT( 396.00).

***** MESSAGE - INPUT(   0.00) TO INTERPOLATION ROUTINE IS BELOW
                ARRAY LIMIT( 396.00).

***** MESSAGE - INPUT(   0.00) TO INTERPOLATION ROUTINE IS BELOW
                ARRAY LIMIT( 396.00).

***** MESSAGE - INPUT(   0.00) TO INTERPOLATION ROUTINE IS BELOW
                ARRAY LIMIT( 396.00).

***** MESSAGE - INPUT(   0.00) TO INTERPOLATION ROUTINE IS BELOW
                ARRAY LIMIT( 396.00).

***** MESSAGE - INPUT(   0.00) TO INTERPOLATION ROUTINE IS BELOW
                ARRAY LIMIT( 396.00).

*****************************************************************************
RATING TABLE DEVELOPED, SITE = ATB2 :
 WITH PS AND AUX. GIVEN - NO ASDATA RECORD GIVEN.

***** MESSAGE - INPUT(   0.00) TO INTERPOLATION ROUTINE IS BELOW
                ARRAY LIMIT( 398.00).

***** MESSAGE - INPUT(   0.00) TO INTERPOLATION ROUTINE IS BELOW
                ARRAY LIMIT( 398.00).

***** MESSAGE - INPUT(   0.00) TO INTERPOLATION ROUTINE IS BELOW
                ARRAY LIMIT( 398.00).

***** MESSAGE - INPUT(   0.00) TO INTERPOLATION ROUTINE IS BELOW
                ARRAY LIMIT( 398.00).

***** MESSAGE - INPUT(   0.00) TO INTERPOLATION ROUTINE IS BELOW
                ARRAY LIMIT( 398.00).
```


US EPA ARCHIVE DOCUMENT

```
***** MESSAGE - INPUT(   0.00) TO INTERPOLATION ROUTINE IS BELOW
                ARRAY LIMIT( 398.00).

***** MESSAGE - INPUT(   0.00) TO INTERPOLATION ROUTINE IS BELOW
                ARRAY LIMIT( 398.00).

***** MESSAGE - INPUT(   0.00) TO INTERPOLATION ROUTINE IS BELOW
                ARRAY LIMIT( 398.00).

***** MESSAGE - INPUT(   0.00) TO INTERPOLATION ROUTINE IS BELOW
                ARRAY LIMIT( 398.00).

***** MESSAGE - INPUT(   0.00) TO INTERPOLATION ROUTINE IS BELOW
                ARRAY LIMIT( 398.00).
```

RATING TABLE NUMBER 2

	ELEV. FEET	Q-TOTAL CFS	Q-PS CFS	Q-AUX. CFS	VOLUME AC-FT	AREA ACRE
1	398.00	0.00	0.00	0.00	13.45	7.15
2	398.28	1.36	1.36	0.00	15.53	7.78
3	398.56	3.85	3.85	0.00	17.78	8.41
4	398.83	7.07	7.07	0.00	20.20	9.03
5	399.11	10.89	10.89	0.00	22.79	9.66
6	399.39	15.22	15.22	0.00	25.56	10.29
7	399.67	20.01	20.01	0.00	28.51	10.92
8	399.94	25.22	25.22	0.00	31.63	11.54
9	400.22	30.81	30.81	0.00	34.95	12.44
10	400.50	36.76	36.76	0.00	38.54	13.40
11	0.00	0.00	0.00	0.00	0.00	6.54
12	0.00	0.00	0.00	0.00	0.00	6.54
13	0.00	0.00	0.00	0.00	0.00	6.54
14	0.00	0.00	0.00	0.00	0.00	6.54
15	0.00	0.00	0.00	0.00	0.00	6.54
16	0.00	0.00	0.00	0.00	0.00	6.54
17	0.00	0.00	0.00	0.00	0.00	6.54
18	0.00	0.00	0.00	0.00	0.00	6.54
19	0.00	0.00	0.00	0.00	0.00	6.54
20	0.00	0.00	0.00	0.00	0.00	6.54

FULL CONDUIT FLOW, ELEV = 401.57 FT

ROUTED RESULTS	BTM WIDTH FT	MAX ELEV FT	VOL-MAX ACFT	AREA-MAX AC	AUX.-HP FT	VOL-AUX. ACFT
NRCS-SDH	0.0	399.82	30.2	11.3	0.00	0.0

```
***** MESSAGE - ROUTING ONLY: NO AUXILIARY SPILLWAY ANALYSIS
```

PEAK - CFS	Q-PS	Q-AUX.	Q-TOT.
DISCHARGE =	22.8	0.0	22.8

ROUTED RESULTS	BTM WIDTH FT	MAX ELEV FT	VOL-MAX ACFT	AREA-MAX AC	AUX.-HP FT	VOL-AUX. ACFT
NRCS-FBH	0.0	400.45	37.8	13.2	0.00	0.0

```
***** MESSAGE - ROUTING ONLY: NO AUXILIARY SPILLWAY ANALYSIS
```

PEAK - CFS	Q-PS	Q-AUX.	Q-TOT.
DISCHARGE =	35.6	0.0	35.6

US EPA ARCHIVE DOCUMENT

```
 ***** WARNING - USER SUPPLIED RATING CURVE DID NOT MEET CRITERIA FOR
                 MINIMUM FLOW THROUGH AUXILIARY SPILLWAY (  200.00 CFS).

 ***** WARNING - INTERPOLATION ERROR - VALUES WERE THE SAME IN DENOMINATOR.
                 CHECK INPUT, THE VALUES USED WERE    0.00000 AND    0.00000.

 Inflow Hyd 1 SDH-Peak =         22.85 CFS  at    8.38 hrs.,  Location Point

 Inflow Hyd 1 FBH-Peak =         35.58 CFS  at    8.02 hrs.,  Location Point
HYDOUT   1     ATB2

1SITES....JOB NO.  1 COMPLETE.
 ------------------------------------------------------------------------------

 GR            Green River Eponds HH Analysis

       2 SUBWATERSHED(S) ANALYZED.

       4 STRUCTURE(S) ANALYZED.

       8 HYDROGRAPHS ROUTED AT LOWEST SITE.

       0 TRIALS TO OBTAIN BOTTOM WIDTH FOR SPECIFIED STRESS OR VELOCITY.

 ******************************************************************************



 SITES.....COMPUTATIONS COMPLETE


1                              SUMMARY TABLE  1          SITES VERSION 2005.1.04
                              ----------------                DATED 01/01/2005


 WATERSHED ID                       RUN DATE                           RUN TIME
 ------------                       --------                           --------
 GR                               07/15/2011                           15:18:29

 >>>   SITE   SUBWS   SUBWS DA   CURVE    TC   TOTAL DA   TYPE    STRUC    <<<
        ID      ID     (SQ MI)    NO.    (HRS)  (SQ MI)  DESIGN   CLASS
       -----   ----   --------   -----   ----   -------   -----   -----
       CPP      CP        0.02     84.   0.15      0.03    TR60     S

 PASS  DIA./  AUX.CREST  BTM.  MAX.    MAX.    EMB.  INTEGR.*  EXIT*    TYPE
  NO.  WIDTH    ELEV    WIDTH   HP     ELEV    VOL.   DIST.     VEL.     HYD
      (IN/FT)   (FT)     (FT)  (FT)    (FT)    (CY)   (FT)   (FT/SEC)
 ----  -----  -------  ------  ----  -------  -------  -----  ------  ---------
    1    0.0    404.0     0.0   0.8    404.8       0.     0.     0.0  NRCS-FBH


 >>>   SITE   SUBWS   SUBWS DA   CURVE    TC   TOTAL DA   TYPE    STRUC    <<<
        ID      ID     (SQ MI)    NO.    (HRS)  (SQ MI)  DESIGN   CLASS
       -----   ----   --------   -----   ----   -------   -----   -----
       ATB1     A1        0.10     81.   0.54      0.10    TR60     S

 PASS  DIA./  AUX.CREST  BTM.  MAX.    MAX.    EMB.  INTEGR.*  EXIT*    TYPE
  NO.  WIDTH    ELEV    WIDTH   HP     ELEV    VOL.   DIST.     VEL.     HYD
      (IN/FT)   (FT)     (FT)  (FT)    (FT)    (CY)   (FT)   (FT/SEC)
 ----  -----  -------  ------  ----  -------  -------  -----  ------  ---------
    1   36.0    404.0     0.0  44.8    448.8       0.     0.     0.0  NRCS-FBH


 >>>   SITE   SUBWS   SUBWS DA   CURVE    TC   TOTAL DA   TYPE    STRUC    <<<
```


US EPA ARCHIVE DOCUMENT

```
        ID      ID     (SQ MI)    NO.    (HRS)  (SQ MI)  DESIGN   CLASS
      -----   ----   --------   -----   ----   -------   -----   -----
      SP       SP        0.02     88.   0.39      0.02    TR60     S

 PASS  DIA./  AUX.CREST  BTM.  MAX.    MAX.    EMB.  INTEGR.*  EXIT*    TYPE
  NO.  WIDTH    ELEV    WIDTH   HP     ELEV    VOL.   DIST.     VEL.     HYD
     (IN/FT)   (FT)     (FT)  (FT)    (FT)    (CY)   (FT)   (FT/SEC)
 ----  -----  -------  ------  ----  -------  -------  -----  ------  ---------
    1   36.0    404.0     0.0  -0.9    403.1       0.     0.     0.0  NRCS-FBH


 >>>   SITE   SUBWS   SUBWS DA   CURVE    TC   TOTAL DA   TYPE    STRUC    <<<
        ID      ID     (SQ MI)    NO.    (HRS)  (SQ MI)  DESIGN   CLASS
      -----   ----   --------   -----   ----   -------   -----   -----
      ATB2     A2        0.06     76.   0.67      0.21    TR60     S

 PASS  DIA./  AUX.CREST  BTM.  MAX.    MAX.    EMB.  INTEGR.*  EXIT*    TYPE
  NO.  WIDTH    ELEV    WIDTH   HP     ELEV    VOL.   DIST.     VEL.     HYD
     (IN/FT)   (FT)     (FT)  (FT)    (FT)    (CY)   (FT)   (FT/SEC)
 ----  -----  -------  ------  ----  -------  -------  -----  ------  ---------
    1   30.0    398.0     0.0   2.5    400.5       0.     0.     0.0  NRCS-FBH


 *  INTEGRITY DIST. AND EXIT VEL. VALUES ARE BASED ON THE ROUTED
    HYDROGRAPH SHOWN UNDER TYPE HYD.



 SITES.......SUMMARY TABLE 1 COMPLETED.


                    NRCS  SITES    VERSION 2005.1.04 ,01/01/2005
                             GR       FILES

INPUT  = J:\Reta White\Projects\Green River\Data
Calcs\SITES\20110714GRHH\GReponds2011.D2C
OUTPUT = J:\Reta White\Projects\Green River\Data
Calcs\SITES\20110714GRHH\GReponds2011.OUT
         DATED 07/15/2011 15:18:29

                         GRAPHICS FILES GENERATED

OPTION "L"  = J:\Reta White\Projects\Green River\Data Calcs\SITES\20110714GRHH

\GReponds2011.DRG DATED 07/15/2011 15:18:29

OPTION "P"  = J:\Reta White\Projects\Green River\Data Calcs\SITES\20110714GRHH

\GReponds2011.DHY DATED 07/15/2011 15:18:29

OPTION "E"  = J:\Reta White\Projects\Green River\Data Calcs\SITES\20110714GRHH

\GReponds2011.DEM DATED 07/15/2011 15:18:29
```

US EPA ARCHIVE DOCUMENT

US EPA ARCHIVE DOCUMENT

Appendix I: Continuous Monitoring Equipment Technical Information

Smart Wireless Gateway

- *Gateway connects wireless self-organizing networks with any host system*
- *Easy configuration and management of self-organizing networks*
- *Easy integration into control systems and data applications through serial and Ethernet connections*
- *Seamless integration into AMS® Device Manager and DeltaV™ automation system*
- *Greater than 99% reliability with industry proven security*
- *Smart Wireless capabilities extends the full benefit of PlantWeb® architecture to previously inaccessible locations*

US EPA ARCHIVE DOCUMENT

EMERSON
Process Management

Smart Wireless Gateway

Flexible Connectivity Options and Easy Device Configuration

Host Integration with DeltaV™ and Ovation®

- Gain real-time information on process and assets with intuitive operator interface
- Native interface between control system and gateway

Flexible Integration

- Smart Wireless Gateway connects legacy hosts, Serial Modbus®, and Ethernet or OPC output

Complete Asset Management with AMS Device Manager

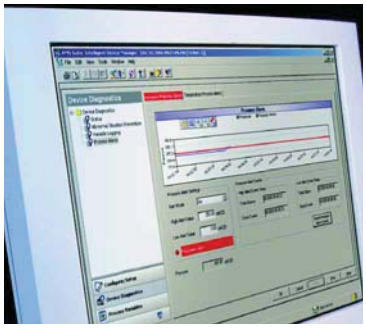

- Manage predictive diagnostics from wired and wireless field devices to identify problems before the process is affected
- Streamline wireless device configuration through Smart Wireless Gateway

Other Interfaces

- Web interface and AMS Wireless Configurator are standard with every gateway for set-up and initial configuration of wireless devices
- Data historian connectivity for documentation and compliance information

Device Specifications

- Update rate: User Selectable 4, 8, 16, 32 second or 1 to 60 minutes
- Network Size: Up to 100 devices
- Output: Ethernet, Modbus, OPC, Serial, HART-IP
- Approvals: FM, CSA, ATEX, IECEx

IEC

WirelessHART

US EPA ARCHIVE DOCUMENT

IEC 62591 (*Wireless*HART™)... The Industry Standard

Self-Organizing, Adaptive Mesh Routing

- No wireless expertise required, network automatically finds the best communication paths
- Network continuously monitors paths for degradation and repairs itself
- Adaptive behavior provides reliable, hands-off operation and simplifies network deployments, expansion, and reconfiguration
- Supports both star and mesh topologies

Industry Standard Radio with Channel Hopping

- Standard IEEE 802.15.4 radios
- 2.4 GHz ISM band sliced into 16 radio-channels
- Time Synchronized Channel Hopping to avoid interference and increase reliability
- Direct sequence spread spectrum (DSSS) technology delivers high reliability in challenging radio environment

Self-Healing Network

- The self-organizing, self-healing network manages multiple communication paths for any given device. If an obstruction is introduced into the network, data will continue to flow because the device already has other established paths. The network will then lay in more communication paths as needed for that device.

Seamless Integration to Existing Hosts

- Transparent and seamless integration
- Same control system applications
- Gateways connect using industry standard protocols

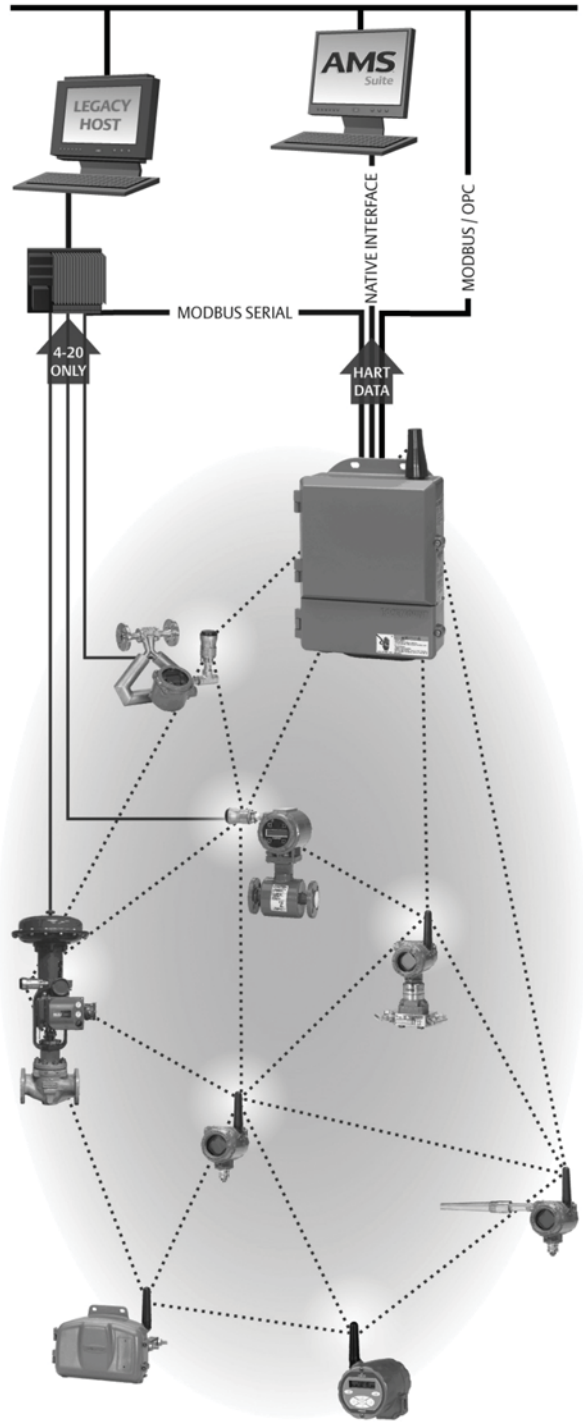

US EPA ARCHIVE DOCUMENT

Ordering Information

Table 1. 1420 Smart Wireless Gateway Ordering Information

★ The Standard offering represents the most common options. The starred options (★) should be selected for best delivery.
The Expanded offering is subject to additional delivery lead time.

Model	Product Description	
1420	Smart Wireless Gateway	
Power Input		
Standard		**Standard**
A	24 Vdc	★
Ethernet Communications - Physical Connection		
Standard		**Standard**
1(1)(2)	Ethernet	★
2(3)(4)	Dual Ethernet	★
Expanded		
3(5)(6)	Fiber Optic Ethernet	
Wireless Update Rate, Operating Frequency, and Protocol		
Standard		**Standard**
A3	User Configurable Update Rate, 2.4 GHz DSSS, WirelessHART	★
Serial Communication		
Standard		**Standard**
N	None	★
A(7)	Modbus RTU via RS485	★
Ethernet Communication - Data Protocols		
Standard		**Standard**
2	Webserver, Modbus TCP/IP, AMS Ready	★
4	Webserver, Modbus TCP/IP, AMS Ready, OPC	★
5(8)	DeltaV Ready	★
6(8)	Ovation Ready	★
7(9)	HART-IP	★

Options (Include with selected model number)

Product Certifications		
Standard		**Standard**
N5	FM Division 2, Non-incendive	★
N6	CSA Division 2,Non-incendive	★
N1	ATEX Type n	★
ND	ATEX Dust	★
N7	IECEx Type n	★
NF	IECEx Dust	★
KD	FM & CSA Division 2, Non-incendive and ATEX Type n	★
N3	China Type n	★
N4	TIIS Type n	★
Adapters		
Standard		**Standard**
J1	CM 20 Conduit Adapters	★
J2	PG 13.5 Conduit Adapters	★
J3	3/4 NPT Conduit Adapters	★
Antenna Options(10)		
Standard		**Standard**
WL2	Remote Omni-Antenna Kit, 50 ft. (15.2 m) cable, Lightning Arrestor	★
WL3	Remote Omni-Antenna Kit, 20 ft. (6.1 m) and 30 ft. (9.1 m) cables, Lightning Arrestor	★
WL4	Remote Omni-antenna Kit, 10 ft. (3.0 m) and 40 ft. (12.2 m) cables, Lightning Arrestor	★
Typical Model Number: 1420 A 2 A3 A 2 N5		

US EPA ARCHIVE DOCUMENT

(1) Single active 10/100 baseT Ethernet port with RJ45 connector.

(2) Additional ports disabled.

(3) Dual active 10/100 baseT Ethernet ports with RJ45 connectors.

(4) Multiple active ports have separate IP addresses, firewall isolation, and no packet forwarding.

(5) 1300 nm Multimode Optical fiber connection with separate SC connectors for Rx and Tx.

(6) Includes features of Option 1.

(7) Convertible to RS232 via adaptor, not included with Gateway.

(8) Includes Webserver, Modbus TCP, AMS Ready, and OPC.

(9) Includes Webserver, Modbus TCP, and AMS Ready.

(10) The WL2 - WL4 options require minor assembly.

ACCESSORIES AND SPARE PARTS

Table 2. Accessories

Item Description	Part Number
AMS® Wireless SNAP-ON™, 1 Gateway License	01420-1644-0001
AMS Wireless SNAP-ON, 5 Gateway Licenses	01420-1644-0002
AMS Wireless SNAP-ON, 10 Gateway Licenses	01420-1644-0003
AMS Wireless SNAP-ON, 5-10 Upgrade Licenses	01420-1644-0004
Serial Port HART Modem and Cables only	03095-5105-0001
USB Port HART Modem and Cables only	03095-5105-0002

Table 3. Spare Parts

Item Description	Part Number
Spare Kit, WL2 Replacement(1), Remote Antenna, 50 ft. (15,2 m) Cable, and Lightning Arrestor	01420-1615-0302
Spare Kit, WL3 Replacement(1), Remote Antenna, 20/30 ft. (6,1/9,1 m) Cables, and Lightning Arrestor	01420-1615-0303
Spare Kit, WL4 Replacement(1), Remote Antenna, 10/40 ft. (3,0/12,2 m) Cables, and Lightning Arrestor	01420-1615-0304

(1) Can not upgrade from integral to remote antenna.

US EPA ARCHIVE DOCUMENT

Specifications

Functional Specifications

Input Power

19.2 - 28.8 Vdc

250 mA startup

150 mA continuous

Radio Frequency Power Output from Antenna

Maximum of 10 mW (10 dBm) EIRP

Environmental

Operating Temperature Range:
-40 to 158 °F (-40 to 70 °C)

Operating Humidity Range:
10-90% relative humidity

EMC Performance

Complies with EN61326-1:2006.

Antenna Options

Integrated Omnidirectional Antenna
Optional remote mount Omnidirectional Antenna

Physical Specifications

Weight

10 lb (4.54 kg)

Material of Construction

Housing
Low-copper aluminum, NEMA 4X

Paint
Polyurethane

Cover Gasket
Silicone Rubber

Antenna
PBT/PC integrated Omnidirectional Antenna

Certifications

Class I Division 2 (U.S.)

Equivalent Worldwide

Communication Specifications

Isolated RS485

2-wire communication link for Modbus RTU multidrop connections

Baud rate: 57600, 38400, 19200, or 9600

Protocol: Modbus RTU

Wiring: Single twisted shielded pair, 18 AWG. Wiring distance up to 4,000 ft. (1,524 m)

Ethernet

10/100base-TX Ethernet communication port
Protocols: Modbus TCP, OPC, HART-IP, https (for Web Interface)
Wiring: Cat5E shielded cable. Wiring distance 328 ft. (100 m).

Fiber Optic Ethernet (optional)

100BaseFx optical Ethernet communication port
Wavelength: 1300 nm center
Multimode

SC connectors
Protocols: Modbus, TCP, OPC, HART-IP, https (for Web Interface)
Wiring: 50/125 um or 62.5/125 um fiber, 2.48 miles (4.0 k,) maximum distance.

Modbus

Supports Modbus RTU and Modbus TCP with 32-bit floating point values, integers, and scaled integers.
Modbus Registers are user-specified.

OPC

OPC server supports OPC DA v2, v3

Self-Organizing Network Specifications

Protocol

IEC 62591 (*Wireless*HART), 2.4 - 2.5 GHz DSSS.

Maximum Network Size

100 wireless devices @ 8 sec.

50 wireless devices @ 4 sec.

Supported Device Update Rates

4 sec. to 60 min.

Network Size/Latency

100 Devices: less than 10 sec.
50 Devices: less than 5 sec.

Data Reliability

>99%

System Security Specifications

Ethernet

Secure Sockets Layer (SSL)- enabled (default) TCP/IP communications

Smart Wireless Gateway Access

Role-based Access Control (RBAC) including Administrator, Maintenance, Operator, and Executive. Administrator has complete control of the gateway and connections to host systems and the self-organizing network.

Self-Organizing Network

AES-128 Encrypted WirelessHART, including individual session keys. Drag and Drop device provisioning, including unique join keys and white listing.

Internal Firewall

User Configurable TCP ports for communications protocols, including Enable/Disable and user specified port numbers. Inspects both incoming and outgoing packets.

US EPA ARCHIVE DOCUMENT

Product Certifications

Approved Manufacturing Locations

Rosemount Inc. – Chanhassen, Minnesota, USA
Emerson Process Management GmbH & Co. - Karlstein, Germany
Emerson Process Management Asia Pacific Private Limited - Singapore
Beijing Rosemount Far East Instrument Co., Limited - Beijing, China

Telecommunication Compliance

All wireless devices require certification to ensure that they adhere to regulations regarding the use of the RF spectrum. Nearly every country requires this type of product certification. Emerson is working with governmental agencies around the world to supply fully compliant products and remove the risk of violating country directives or laws governing wireless device usage.

FCC and IC

This device complies with Part 15 of the FCC Rules. Operation is subject to the following conditions. This device may not cause harmful interference. This device must accept any interference received, including interference that may cause undesired operation. This device must be installed to ensure a minimum antenna separation distance of 20 cm from all persons.

Ordinary Location Certification for FM

As standard, the Gateway has been examined and tested to determine that the design meets basic electrical, mechanical, and fire protection requirements by FM, a nationally recognized testing laboratory (NRTL) as accredited by the Federal Occupational Safety and Health Administration (OSHA).

North American Certifications

N5 FM Division 2, Non-Incendive
Certificate Number: 3028321
Nonincendive for Class I, Division 2, Groups A, B, C, and D.
Suitable for Class II, III, Division 1,
Groups E, F, and G; Indoors/outdoor locations;
Type 4X
Temperature Code: T4 (-40 °C < T_a < 60 °C)

Canadian Standards Association (CSA)

N6 CSA Division 2, Non-Incendive
Certificate Number: 1849337
Suitable for Class I, Division 2, Groups A, B, C, and D.
Dust Ignition-proof for Class II, Groups E, F, and G;
Suitable for Class III Hazardous Locations.;
Install per Rosemount drawing 01420-1011.
Temperature Code: T4 (-40 °C < T_a < 60 °C)
CSA Enclosure Type 4X

European Union Directive Information

The EC declaration of conformity for all applicable European directives for this product can be found on the Rosemount website at www.rosemount.com. A hard copy may be obtained by contacting your local sales representative.

ATEX Directive (94/9/EC)

Emerson Process Management complies with the ATEX Directive.

Electro Magnetic Compatibility (EMC) (2004/108/EC)

Emerson Process Management complies with the EMC Directive.

Radio and Telecommunications Terminal Equipment Directive (R&TTE)(1999/5/EC)

Emerson Process Management complies with the R&TTE Directive

CE

European Certification

N1 ATEX Type n
Certificate Number: Baseefa 07ATEX0056X
ATEX Marking: Ex II 3 G
Ex nA nL IIC T4 (-40 °C < T_a < 60 °C)

Special condition for safe use (X):

The surface resistivity of the antenna is greater than one gigaohm. To avoid electrostatic charge build-up, it must not be rubbed or cleaned with solvents or a dry cloth.

The Apparatus is not capable of withstanding the 500V insulation test required by Clause 9.4 of EN 60079-15: 2005. This must be taken into account when installing the apparatus.

ND A TEX Dust
Certificate Number: Baseefa 07ATEX0057
ATEX Marking: Ex II 3 G
Ex tD A 22 IP66 T135 (-40 °C < T_a < 60 °C)
Maximum working Voltage = 28 V

N7 IECEx Type n
Certificate Number: IECEx BAS 07.0012X
Ex nA nL IIC T4 (-40 °C =< T_a <=60 °C)
Maximum working voltage = 28 V

Special condition for safe use (X):

The surface resistivity of the antenna is greater than one gigaohm. To avoid electrostatic charge build-up, it must not be rubbed or cleaned with solvents or a dry cloth.

The Apparatus is not capable of withstanding the 500 V insulation test required by Clause 9.4 of EN 60079-15: 2005. This must be taken into account when installing the apparatus.

NF IECEx Dust
Certification Number: IECEx BAS 07.0013
Ex tD A22 IP66 T135 (-40 °C < T_a < 60 °C)
Maximum working voltage = 28 V

Combinations of Certifications

KD Combination of N5, N6, and N1.

US EPA ARCHIVE DOCUMENT

Dimensional Drawings

Figure 1. Smart Wireless Gateway
(Dimensions are in inches (millimeters)

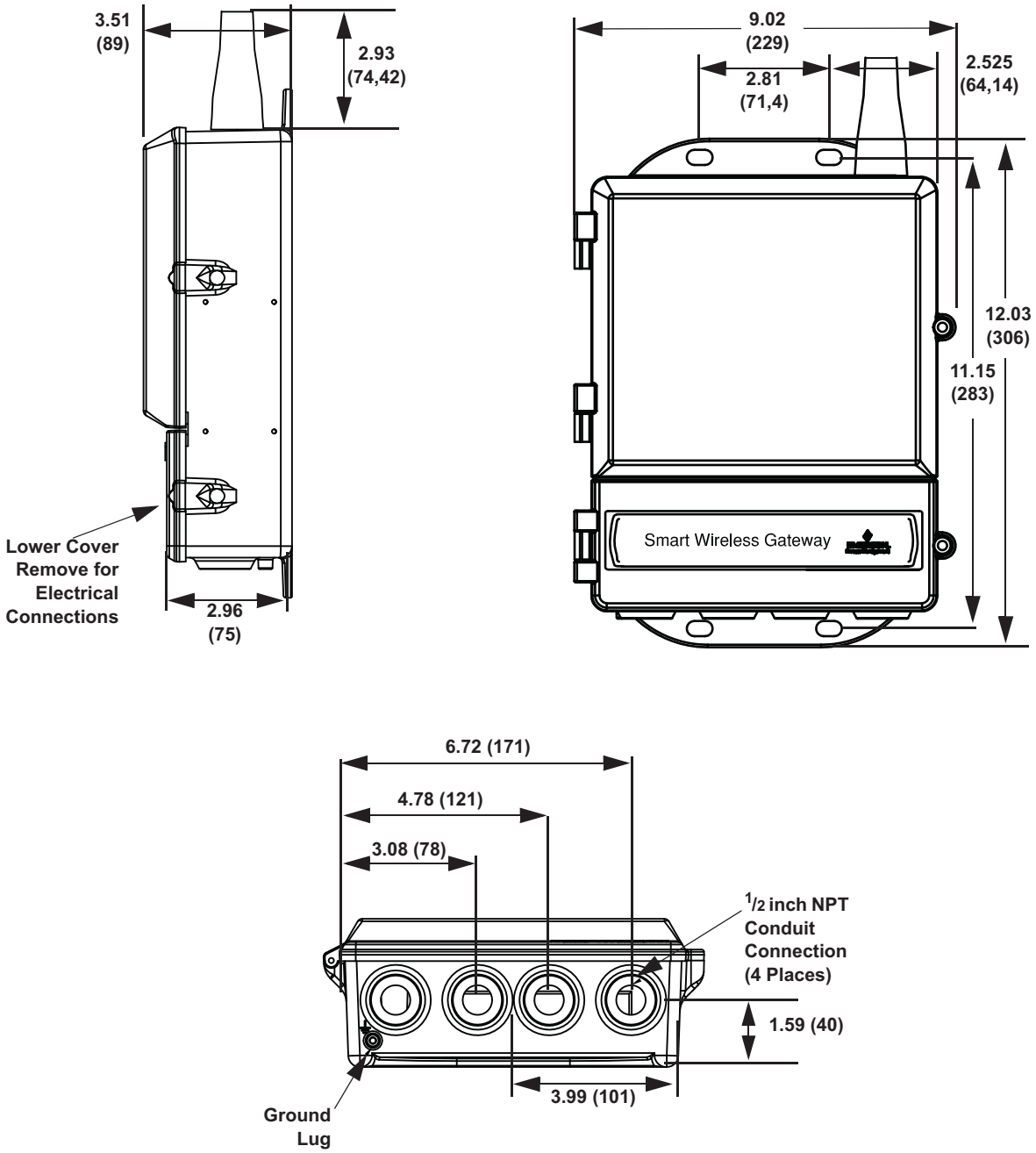

US EPA ARCHIVE DOCUMENT

Remote Omni-Antenna Kit

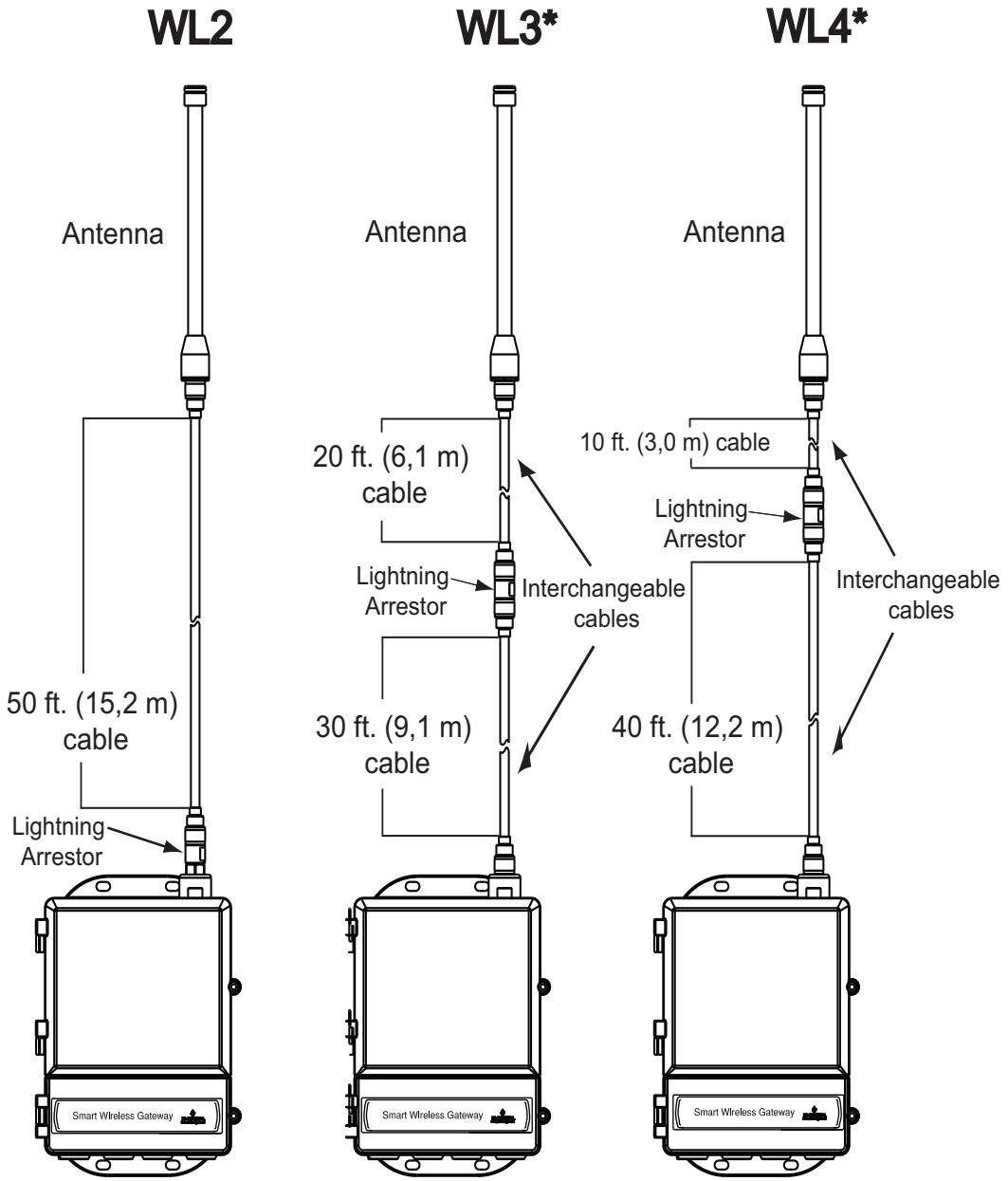

The Remote Omni-Antenna kit includes sealant tape for remote antenna connection, as well as mounting brackets for the antenna, Lightning Arrestor, and the Smart Wireless Gateway.

Lightning protection is included on all the options. WL3 and WL4 provide lightning protection along with the ability to have the gateway mounted indoors, the antenna mounted outdoors, and the lightning arrestor mounted at the building egress.

****Note that the coaxial cables on the remote antenna options WL3 and WL4 are interchangeable for installation convenience.***

US EPA ARCHIVE DOCUMENT

US EPA ARCHIVE DOCUMENT

Standard Terms and Conditions of Sale can be found at www.rosemount.com\terms_of_sale
The Emerson logo is a trade mark and service mark of Emerson Electric Co.
Rosemount and the Rosemount logotype are registered trademarks of Rosemount Inc.
PlantWeb is a registered trademark of one of the Emerson Process Management group of companies.
HART and WirelessHART are registered trademarks of the HART Communication Foundation
Modbus is a trademark of Modicon, Inc.
All other marks are the property of their respective owners.

© 2010 Rosemount Inc. All rights reserved.

Emerson Process Management
Rosemount Inc.
8200 Market Boulevard
Chanhassen, MN 55317 USA
T (U.S.) 1-800-999-9307
T (International) (952) 906-8888
F (952) 949-7001
www.rosemount.com

Emerson Process Management
Blegistrasse 23
P.O. Box 1046
CH 6341 Baar
Switzerland
T +41 (0) 41 768 6111
F +41 (0) 41 768 6300

Emerson FZE
P.O. Box 17033
Jebel Ali Free Zone
Dubai UAE
T +971 4 883 5235
F +971 4 883 5312

Emerson Process Management
Asia Pacific Pte Ltd
1 Pandan Crescent
Signapore 128461
T +65 6777 8211
F +65 6777 0947
Service Support Hotline: +65 6770 8711
Email: Enquiries@AP.EmersonProcess.com

EMERSON
Process Management

REVISIONS				
REV	DESCRIPTION	CHG.NO.	APP'D	DATE
AA	NEW RELEASE	RTC1023101	J B	11/02/08
AB	UPDATE HEIGHT OF REMOTE MOUNT ANTENNA	RTC1028128	J B	3/30/09

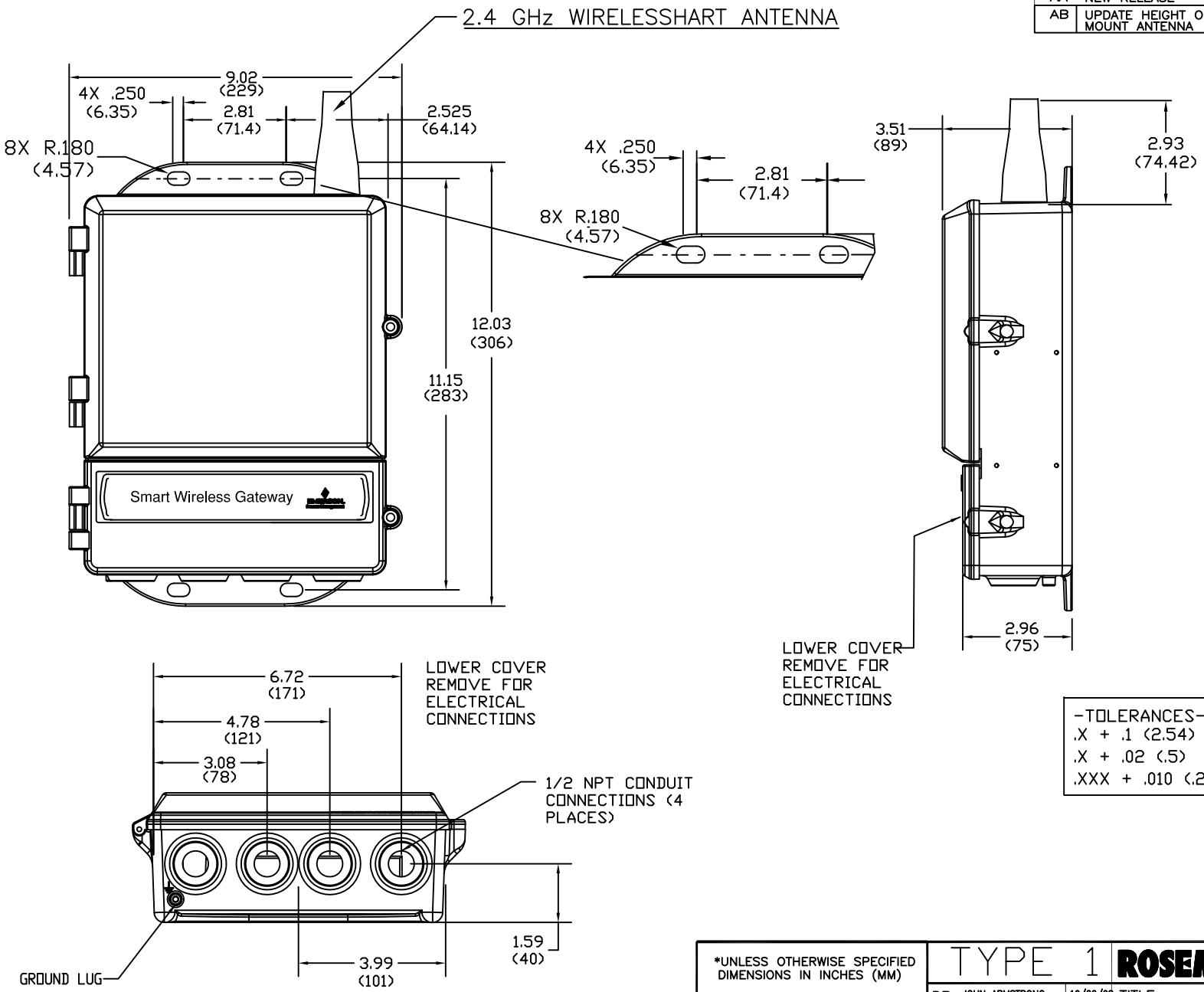

-TOLERANCES-
.X + .1 (2.54)
.X + .02 (.5)
.XXX + .010 (.25)

*UNLESS OTHERWISE SPECIFIED DIMENSIONS IN INCHES (MM)

EMERSON. Process Management

TYPE 1

ROSEMOUNT® CHANHASSEN, MINNESOTA

DR. JOHN ARMSTRONG	10/22/08	TITLE DIMENSIONAL DRAWING FOR MODEL 1420 WIRELESS HART GATEWAY
APP'D. DRAWING j brewer	10/22/08	
APP'D. DRAWING		
APP'D. TAGGING		SIZE A — DRAWING NO. 01420-7001
APP'D. SPECIALS		SCALE:NONE — SHEET 1 OF 2

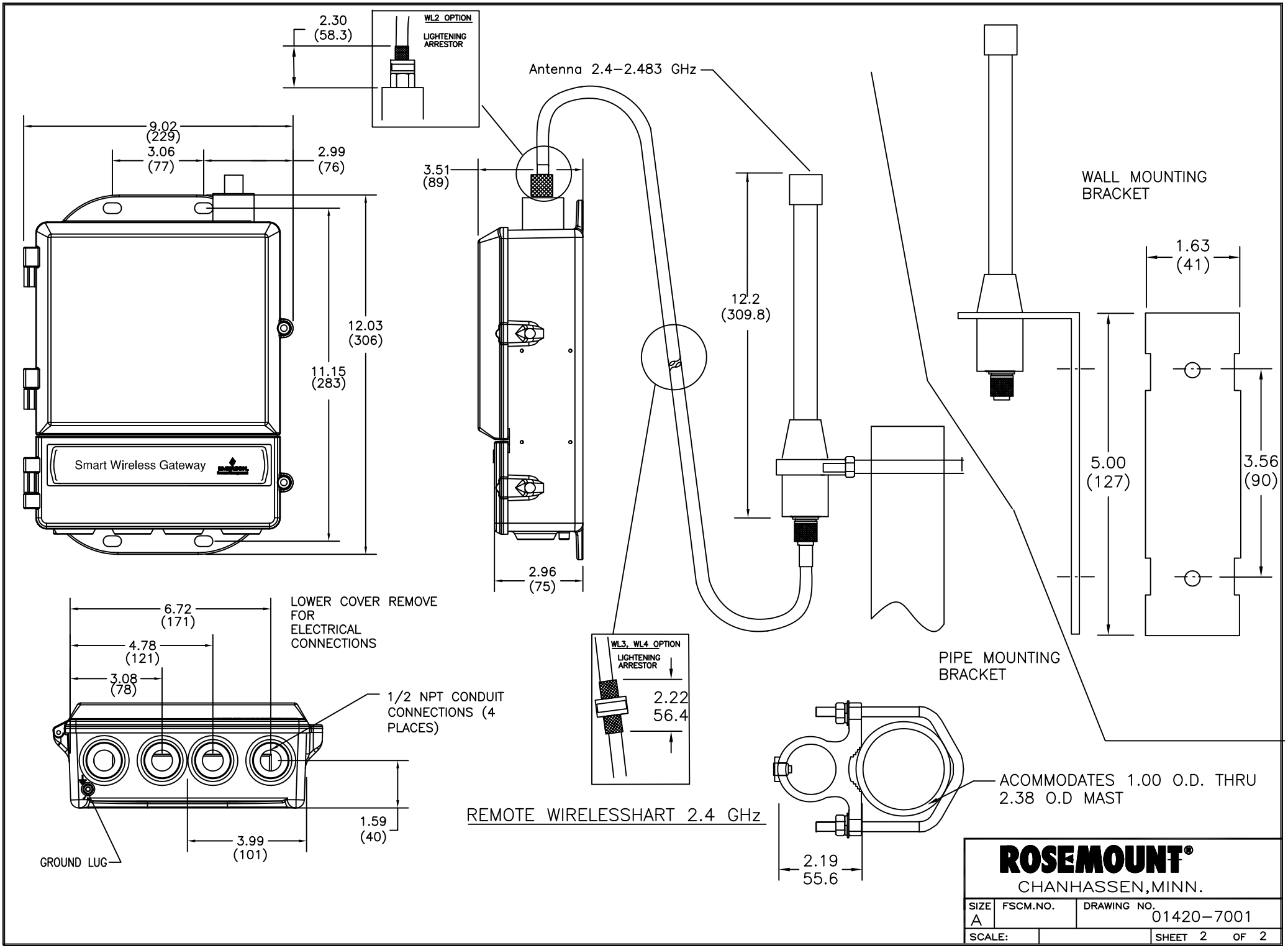
WL2 OPTION
LIGHTENING ARRESTOR
2.30
(58.3)
Antenna 2.4–2.483 GHz
9.02
(229)
3.06
(77)
2.99
(76)
3.51
(89)
12.03
(306)
11.15
(283)
Smart Wireless Gateway
12.2
(309.8)
2.96
(75)
WALL MOUNTING BRACKET
1.63
(41)
5.00
(127)
3.56
(90)
6.72
(171)
4.78
(121)
3.08
(78)
LOWER COVER REMOVE FOR ELECTRICAL CONNECTIONS
1/2 NPT CONDUIT CONNECTIONS (4 PLACES)
1.59
(40)
3.99
(101)
GROUND LUG
WL3, WL4 OPTION
LIGHTENING ARRESTOR
2.22
56.4
PIPE MOUNTING BRACKET
ACOMMODATES 1.00 O.D. THRU 2.38 O.D MAST
2.19
55.6
REMOTE WIRELESSHART 2.4 GHz
ROSEMOUNT®
CHANHASSEN,MINN.
SIZE A
FSCM.NO.
DRAWING NO. 01420–7001
SCALE:
SHEET 2 OF 2

Technical Information

WirelessHART Adapter SWA70

Intelligent WirelessHART interface module for connection to 4...20 mA/HART devices

US EPA ARCHIVE DOCUMENT

WirelessHART

Application

WirelessHART Adapter SWA70 is a battery powered, interface module that connects HART and 4...20 mA devices to a WirelessHART network. The adapter is suitable for several applications, for example:

- Tank and silo monitoring/Inventory control:
  Measured values together with device and battery status are transmitted at regular intervals to a higher level system
- Access to installed base:
  Additional diagnosis information is extracted from existing wired HART devices and sent to a plant asset management tool, e.g. FieldCare
- Condition monitoring of equipment:
  Wireless devices are added at critical points in the plant not normally connected to the control room due to accessibilty or wiring costs. Improved data flow and diagnostics increase plant reliability and safety.
- Process optimization:
  Temporary connection of the WirelessHART Adapter allows plant sections to be monitored and optimised at little cost and effort.

Features and Benefits

- HART devices quickly upgraded to WirelessHART technology
- 4...20 mA devices quickly integrated into the WirelessHART network
- One 4...20 mA or up to four HART devices can be connected (in multidrop mode) to one adapter
- Burst mode and event notification supported for adapter and connected devices
- Remote and difficult-to-access HART devices connected to the plant control room without expensive cables
- Tanks and silos integrated at minimal cost into e.g. SupplyCare Inventory Control software
- Endress+Hauser and 3rd party devices maintainable with open FieldCare Plant Asset Mangement software
- Network configuration also done within FieldCare Plant Asset Management software
- Supports configuration with FDT and DD-based network tools

TI00026S/04/en/13.10
71128571

Endress+Hauser
People for Process Automation

Function and System Design

WirelessHART

WirelessHART is a HART Communication Foundation specification for use in process automation. It adds wireless capabilities to the HART protocol while maintaining compatibility with existing HART devices, commands, and tools.

A WirelessHART network comprises:

- Wireless field devices
- Non-wireless field devices enhanced by using a WirelessHART adapter
- Gateways that enable communication between devices and host applications
- A Network & Security Manager responsible for configuring, managing and monitoring the network

WirelessHART Adapter SWA70

Endress+Hauser's SWA70 WirelessHART Adapter has been designed to act as an add-on interface for any HART or 4...20 mA device. It supports the following functions:

- Powering of one HART or one 4...20 mA device;
  alternatively, connection of up to four externally powered HART devices in multidrop mode
- Scaling of current signal supplied by a connected 4...20 mA device
- Burst mode and event notification for both itself and the connected devices.

The battery has been specially selected to give long life when used in monitoring applications.

System design

WirelessHART Adapter SWA70 transmits its information to a host application through a WirelessHART Fieldgate. The figure below shows a typical meshed WirelessHART network architecture.

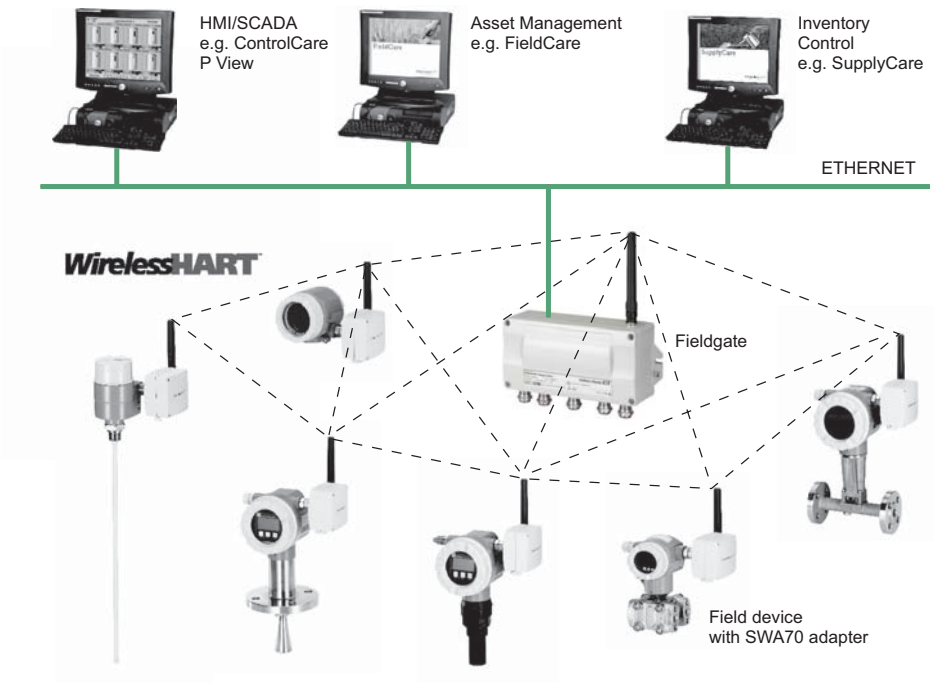

US EPA ARCHIVE DOCUMENT

Input

Wired interface

One device input channel for:
- One point-to-point with a HART device, or
- One point-to-point connection with a 4...20 mA device, or
- Up to four externally powered HART devices operating in multidrop mode

Communication type

HART communication in multidrop mode, 4...20 mA current signal in point-to-point mode

Protocol version

HART Version 7.0 (backwards compatible with previous HART versions)

Transmission rate

1200 bits/s for HART multidrop

Type of protection

Intrinsically safe and dust Ex versions available, see Ordering Information

Device loop-power

Current:	4 mA to 20mA DC (according to NAMUR recommendation NE 43) or 4 mA when operating in multidrop mode (one device only)
Fault current:	I ≤ 3.6 mA or I ≥21 mA
Protection:	Short-circuit protected, triggered for currents > 25 mA
Supply voltage:	8 VDC to 23 VDC

Connection facilities

6-port terminal block, screw terminals:

Function	Circuit	Max. terminal voltage
Device supply	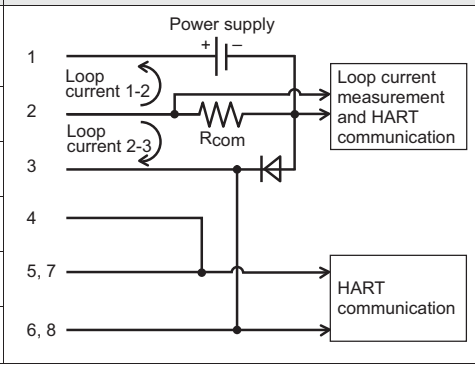	
HART/4...20 mA		Between Terminals 2 & 3 $U_i \leq 30$ VDC
External Supply/ GND		
HART high impedance		
HART high impedance		Between Terminals 5 & 6 $U_i \leq 30$ VDC
High impedance GND		

Cable

Adapter mounted directly on device: cables supplied
Separately mounted adapter: standard installation cable

Device connection

Connection of loop-powered devices (adapter powered) and externally powered 4-wire devices

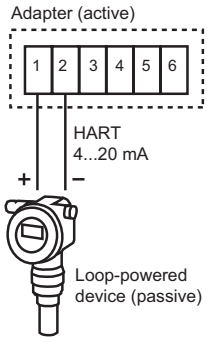

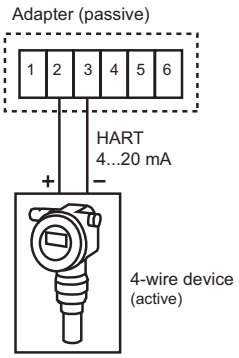

US EPA ARCHIVE DOCUMENT

Connection of loop-powered devices with external power supply

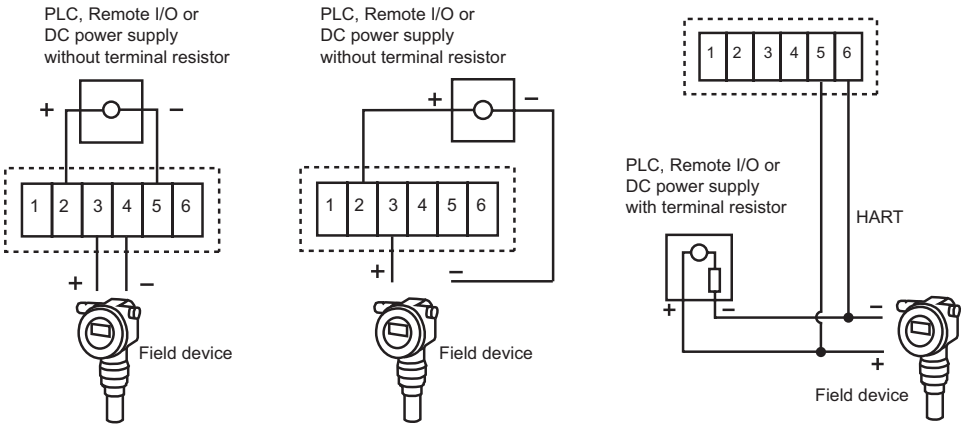

Output

Wireless interface	WirelessHART communication interface
Transmission rate	Nominal 250 kBits/s
Operating frequency	2.4 GHz (ISM band)
Transmission range	Under reference conditions: Outdoor 250 m, indoor 50 m
RF power level	Configurable 0 dBm or 10 dBm, depending upon national regulations
Output variables	Output configurable according to user requirement ▪ Adapter: loop-current and up to three other variables selectable from adapter temperature, battery voltage, energy consumed, estimated battery life-time ▪ 4...20 mA device: scaled or linearized process value ▪ HART device: up to four process variables (configured through Fieldgate/gateway)
Additional functions	▪ Burst mode, configurable for up to eight variables from adapter and/or connected device(s) ▪ Event notification, configurable for up to eight variables from adapter and/or connected device(s) ▪ Fault recognition and scaling or linearization of 4...20 mA signal of connected analog device ▪ Monitoring of energy consumption ▪ Locking/unlocking of device parameterization
Diagnosis	Diagnosis function in accordance with NAMUR NE 107, ASM and HART recommendations

Power Supply

Power supply	Special long life lithium thionylchloride battery pack
Supply voltage	5 VDC to 7.2 VDC
Battery rating	19 Ah nominal capacity at 20°C
Battery life	5–7 years, dependent upon update rate of process variables, instrument type and environmental conditions

US EPA ARCHIVE DOCUMENT

Mechanical Construction

Overall dimensions W x H x D: 111.5 mm x 189.9 mm x 92.8 mm

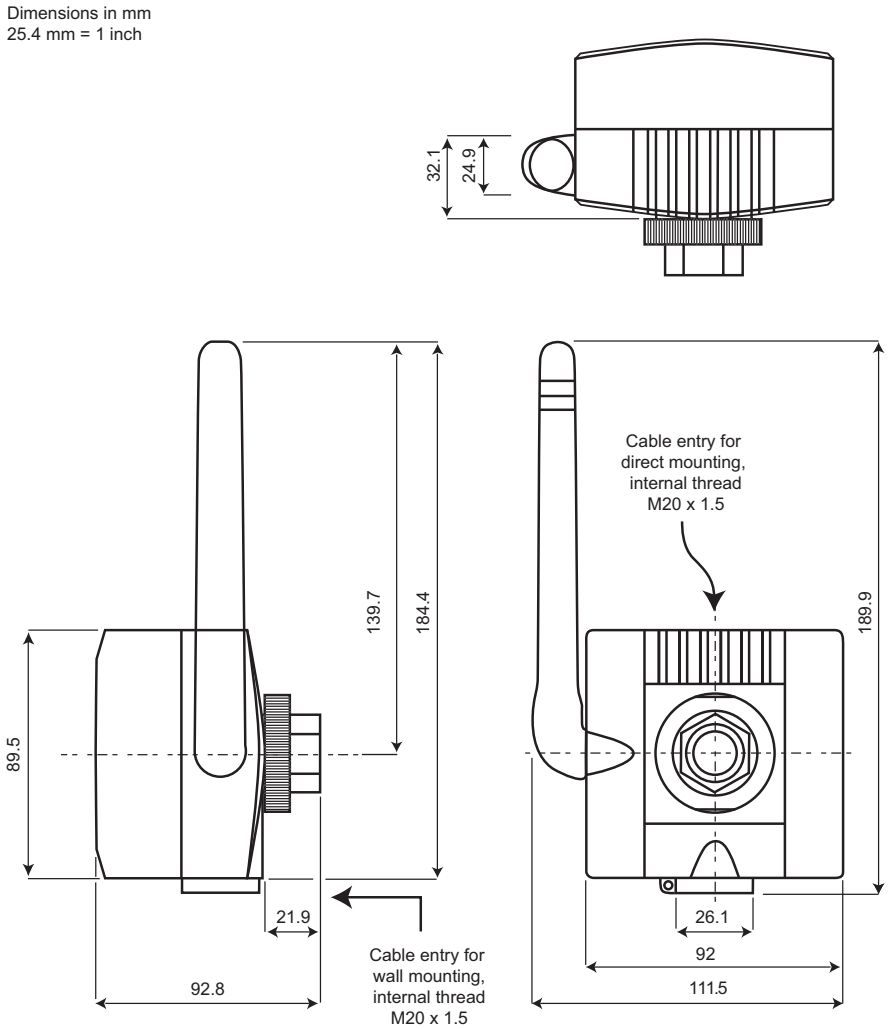

Weight	0.5 kg, without battery pack 0.785 kg, with battery pack
Housing	Material: PBT FR or aluminium, see ordering Information Colour: Light grey, RAL 7035 with blue logo
Degree of protection	IP 65, IP 66; NEMA Type 4
Cable entry	Two separate M20x1.5 threaded entries for direct and separate mounting
Mounting adapter	M20x1.5 to M20x1.5, M20x1.5 to G 1/2, M20x1.5 to NPT 1/2, M20x1.5 to NPT 3/4, see Ordering Information
Antenna	Omnidirectional dipole antenna, position adjustable in vertical plane.

US EPA ARCHIVE DOCUMENT

US EPA ARCHIVE DOCUMENT

Instruments International

Endress+Hauser
Instruments International AG
Kaegenstrasse 2
4153 Reinach
Switzerland

Tel. +41 61 715 81 00
Fax +41 61 715 25 00
www.endress.com
info@ii.endress.com

Endress+Hauser
People for Process Automation

Level Pressure Flow Temperature Liquid Analysis Registration Systems Components Services Solutions

Technical Information

Waterpilot FMX21

Hydrostatic level measurement
Reliable and robust level probe with ceramic measuring cell
Compact device for level measurement in fresh water, wastewater and saltwater, communication via HART

Application

The Waterpilot FMX21 is a pressure sensor for hydrostatic level measurement.
Endress+Hauser offers three different versions of the FMX21 sensor:

- FMX21 with a stainless steel housing, outer diameter of 22 mm (0.87 inch): Standard version suitable for drinking water applications and for use in bore holes and wells with small diameters.
- FMX21 with a stainless steel housing, outer diameter of 42 mm (1.66 inch): Heavy duty version, easy clean flush-mounted process diaphragm. Ideally suited for wastewater and sewage treatment plants.
- FMX21 with a coated housing, outer diameter of 29 mm (1.15 inch): Corrosion resistant version generally for use in saltwater, particularly for ship ballast water tanks.

Your benefits

- High resistance to overload and aggressive media
- High-precision, robust ceramic measuring cell with long-term stability
- Climate proofed sensor thanks to completely potted electronics and 2-filter pressure compensation system
- 4 to 20 mA with superimposed HART 6.0 output signal
- Simultaneous measurement of level and temperature with optionally integrated Pt100 temperature sensor
- Accuracy
  - Reference accuracy ±0.2 %
  - PLATINUM version ±0.1 %
- Automatic density compensation to increase accuracy
- Usage in drinking water: KTW, NSF, ACS
- Approvals: ATEX, FM, CSA
- Marine certificate: GL, ABS, LR, DNV
- Extensive range of accessories provides complete measuring point solutions

US EPA ARCHIVE DOCUMENT

TI00431P/00/EN/13.11
71129098

Endress+Hauser
People for Process Automation

Function and system design

Device selection

Waterpilot FMX21	P01-FMX21xxx-16-xx-xx-xx-002	P01-FMX21xx-16-xx-xx-xx-003	P01-FMX21xxx-16-xx-xx-xx-004
Field of application	Hydrostatic level measurement in deep wells e.g. drinking water	Hydrostatic level measurement in wastewater	Hydrostatic level measurement in saltwater
	Caution! The Waterpilot is not suitable for use in biogas plants since the gases can diffuse through the elastomers (seals, extension cable). For applications with biogas Endress+Hauser offers the level transmitter Deltapilot.		
Process connection	– Mounting clamp – Extension cable mounting screw with G1 ½ A or 1 ½ NPT thread		
Outer diameter	22 mm (0.87 in)	42 mm (1.65 in)	max. 29 mm (1.14 in)
Extension cable	– PE extension cable – PUR extension cable – FEP extension cable		
Seals	– FKM Viton – EPDM [1]	– FKM Viton	– FKM Viton – EPDM [1]
Measuring ranges	– Gauge pressure: from 0 to 0.1 bar to 0 to 20 bar (0 to 1.5 psi to 0 to 300 psi) – Absolute pressure: from 0 to 2 bar to 0 to 20 bar (0 to 30 psi to 0 to 300 psi)		– Gauge pressure: from 0 to 0.1 bar to 0 to 4 bar (0 to 1.5 psi bis 0 to60 psi) – Absolute pressure: from 0 to 2 bar to 0 to 4 bar (0 to 1.5 psi bis 0 to 60 psi)
	– Customer-specific measuring ranges; factory-calibrated – The following output units can be configured: %, mbar, bar, kPa, MPa, mmH_2O, mH_2O, inH_2O, ftH_2O, psi and numerous level units.		
Overload	Up to 40 bar (580 psi)		Up to 25 bar (362 psi)
Process temperature range	–10 to +70 °C (+14 to +158 °F)		0 to +50 °C (+32 to +122 °F)
Reference accuracy	– ±0.2 % of the set span – Optional: ±0.1 % of set span (PLATINUM version)		
Supply voltage	10.5 to 35 V DC, Ex: 10.5 to 30 V DC		
Output	4 to 20 mA (invertible) with superimposed digital communication protocol HART 6.0, 2-wire (invertible)		
Options	– Drinking water approval		
	– Large selection of approvals, including ATEX, FM, CSA – Broad range of accessories – Integrated Pt100 temperature sensor and TMT182 temperature head transmitter (4 to 20 mA/HART)		
Specialties	– High-precision, robust ceramic measuring cell with long-term stability – Automatic density compensation – Customer specific cable marking – Absolute pressure cell		

1) Recommended for drinking water applications.

US EPA ARCHIVE DOCUMENT

Measuring principle

The ceramic measuring cell is a dry measuring cell, i.e. pressure acts directly on the robust ceramic process isolating diaphragm of the Waterpilot FMX21.
Any changes in the air pressure are routed through the extension cable, via a pressure compensation tube, to the rear of the ceramic process isolating diaphragm and compensated for. A pressure-dependent change in capacitance caused by the movement of the process isolating diaphragm is measured at the electrodes of the ceramic carrier. The electronics then convert this into a signal which is proportional to the pressure and is linear to the level of the medium.

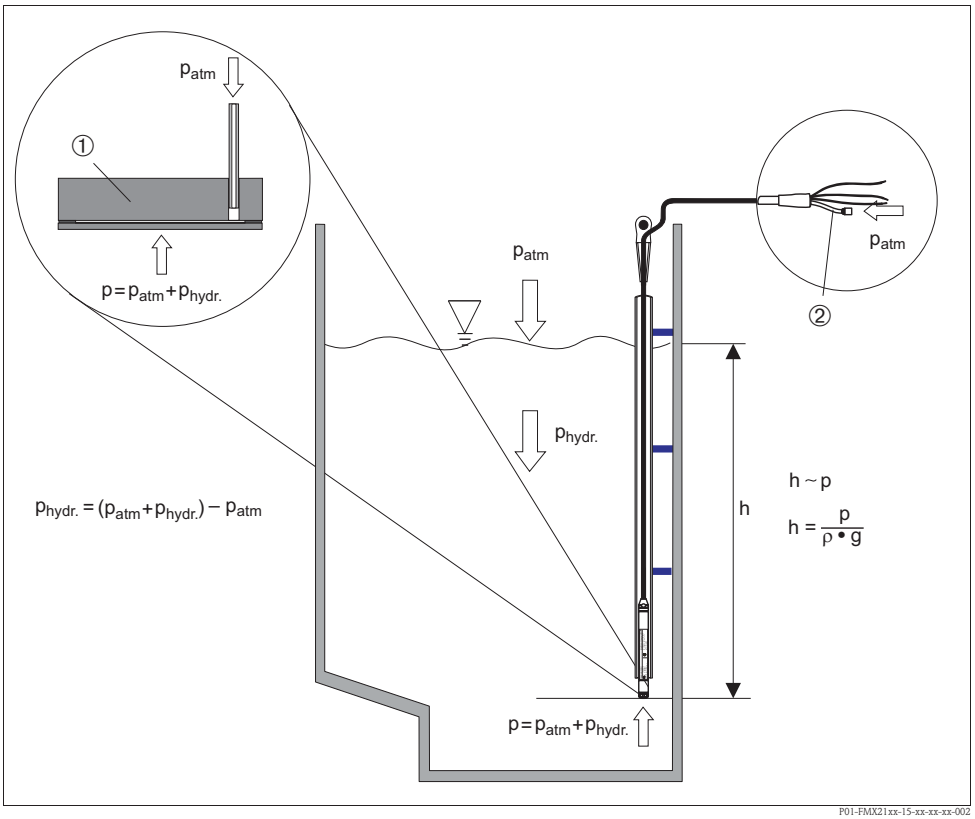

Measuring principle

1	*Ceramic measuring cell*
2	*Pressure compensation tube*
h	*Level height*
p	*Total pressure = hydrostatic pressure + atmospheric pressure*
ρ	*Density of the medium*
g	*Gravitational acceleration*
$p_{hydr.}$	*Hydrostatic pressure*
p_{atm}	*Atmospheric pressure*

Temperature measurement with optional Pt100 [1)]

Endress+Hauser also offers the Waterpilot FMX21 with an optional 4-wire Pt100 resistance thermometer to measure level and temperature simultaneously. The Pt100 belongs to Accuracy Class B in accordance with DIN EN 60751, see also → 26 "Accessories".

Temperature measurement with optional Pt100 and TMT182 temperature head transmitter [1)]

Endress+Hauser also offers the TMT182 temperature head transmitter with the HART protocol to convert the temperature signal to an analog, scalable 4 to 20 mA output signal superimposed with HART 6.0, see also → 7 "Density compensation with Pt100 temperature sensor" → 24 "Ordering information" → 26 Chap. "Accessories" and Technical Information TI00078R.

1) Not for use in hazardous areas.

US EPA ARCHIVE DOCUMENT

Measuring system

As standard, the complete measuring system consists of a Waterpilot FMX21 and a transmitter power supply unit with a supply voltage of 10.5 to 30 V DC (hazardous areas) or 10.5 to 35 V DC (non-hazardous areas).

Possible measuring point solutions with a transmitter and evaluation units from Endress+Hauser:

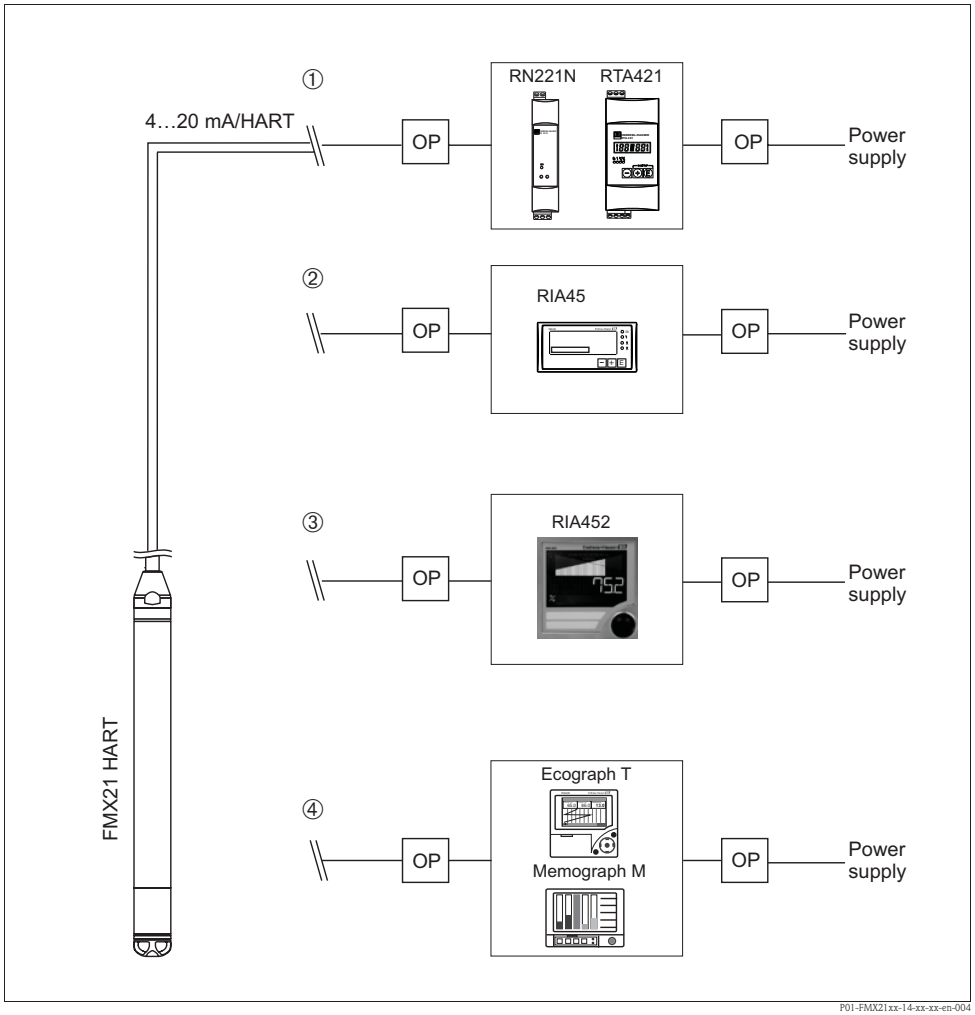

Sample applications with FMX21
OP = Overvoltage protection, e.g. HAW from Endress+Hauser (not for use in hazardous areas)
- OP on sensor side for field installation: HAW569/for top-hat/DIN rail: HAW562/intrinsically safe HAW562Z
- OP on power supply side for top-hat/DIN rail: HAW561 (115/230 V) and HAW561K (24/48 V AC/DC)
The overvoltage protection selected must be appropriate for the supply voltage.

1. Easy and cost-effective measuring point solution: power supplied to the Waterpilot in hazardous and non-hazardous areas via the RN221N active barrier.
   Power supply and additional control of two appliances, such as pumps, by means of the RTA421 limit value switch with onsite display.
2. The RIA45 units (for panel mounting) offer power supply, an onsite display, two switch outputs and signal adjustment (turndown).
3. If several pumps are used, the pump service life can be prolonged by alternate switching. With alternating pump control, the pump which was out of service for the longest period of time is switched on. The evaluation unit RIA452 (for panel mounting) provide this option in additional to several other functions.
4. State-of-the-art recording technology with graphic display recorders from Endress+Hauser, such as Ecograph T, Memograph M for documenting, monitoring, visualizing and archiving purposes.

US EPA ARCHIVE DOCUMENT

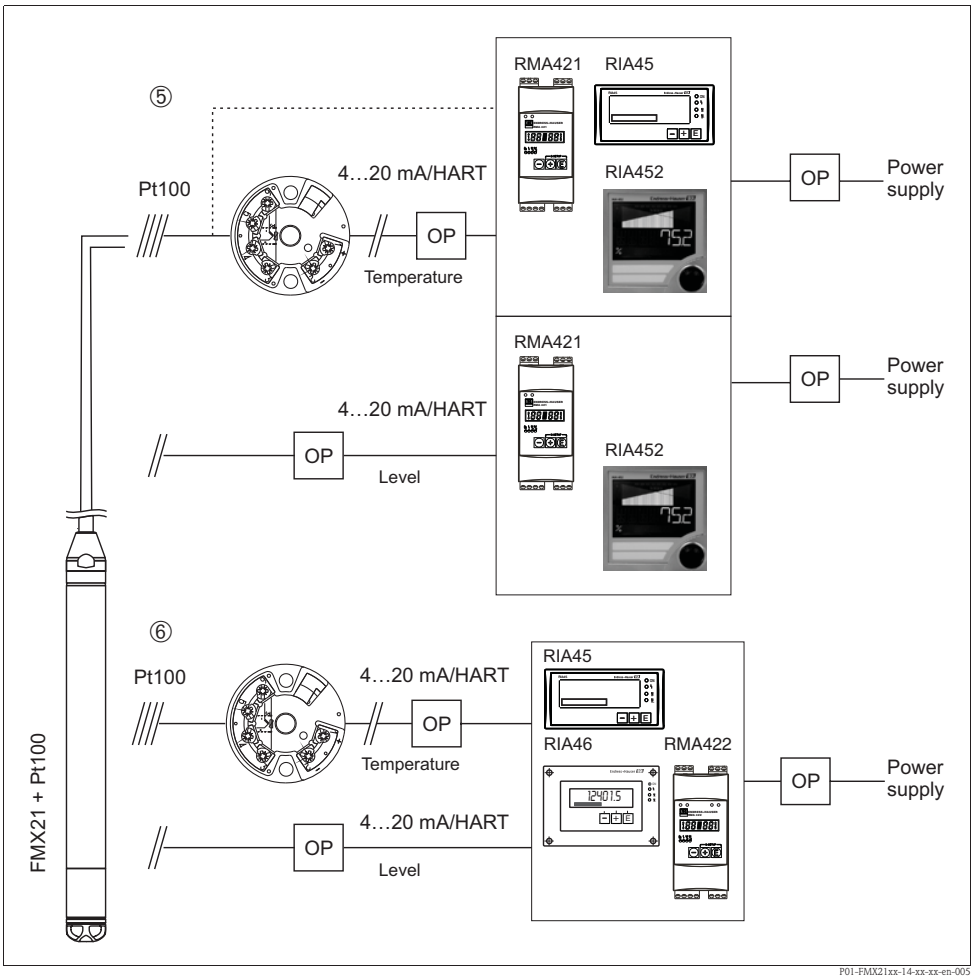

Sample applications with FMX21 with Pt100
OP = Overvoltage protection e.g. HAW from Endress+Hauser (not for use in hazardous areas)
– OP on sensor side for field installation: HAW569/for top-hat/DIN rail: HAW562/intrinsically safe HAW562Z
– OP on power supply side for top-hat/DIN rail: HAW561 (115/230 V) and HAW561K (24/48 V AC/DC)
The overvoltage protection selected must be appropriate for the supply voltage.

5. If you want to measure, display and evaluate the temperature as well as the level, e.g. to monitor temperature in fresh water to detect temperature limits for germ formation, you have the following options:
   The optional TMT182 temperature head transmitter can convert the Pt100 signal to a 4 to 20 mA HART signal and transfer it to any common evaluation unit. The RMA421, RIA45 and RIA452 evaluation units also offer a direct input for the Pt100 signal.
6. If you want to record and evaluate the level and temperature measured value with one device, use the RMA422, RIA45 and RIA46 evaluation unit with two inputs. It is even possible to mathematically link the input signals with this unit. These evaluation are not HART permeable.

US EPA ARCHIVE DOCUMENT

Level measurement with absolute pressure probe and external pressure signal

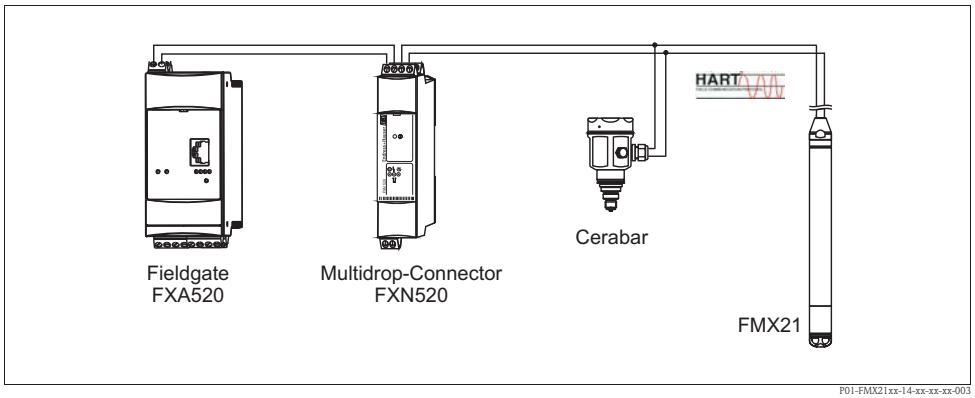

P01-FMX21xx-14-xx-xx-xx-003

It is advisable to use an absolute pressure probe for applications in which condensation can occur. In the case of level measurement with an absolute pressure probe, the measured value is affected by fluctuations in the ambient air pressure. To correct the resulting measured error, you can connect an external absolute pressure sensor (e.g. Cerabar) to the HART signal cable, switch the waterpilot to the burst mode and the Cerabar to operate in mode "Electr. Delta P".

The external absolute pressure sensor then calculates the difference between the two pressure signals and can thus determine the level precisely.
Only one level measured value can be corrected in this way.

Caution!
If using intrinsically safe devices, strict compliance with the rules for interconnecting intrinsically safe circuits as stipulated in IEC60079-14 (proof of intrinsic safety) is mandatory.

Density compensation with Pt100 temperature sensor

The Waterpilot FMX21 can correct measured errors that result from fluctuations in the density of the water caused by temperature. Users can choose from the following options:

Use the internally measured sensor temperature of the FMX21

The internally measured sensor temperature is calculated in the Waterpilot FMX21 for density compensation. The level signal is thus corrected according to the density characteristic line of the water.

Use the optional internal temperature sensor for density compensation in a suitable HART master (e.g. PLC)

The Waterpilot FMX21 is available with an optional Pt100 temperature sensor. Endress+Hauser additionally offers the TMT182 temperature head transmitter to convert the Pt100 signal to a 4 to 20 mA HART signal. The temperature and pressure signal is transmitted to the HART master (e.g. PLC) where a corrected level value can be generated using a stored linearization table or the density function (of a chosen medium).

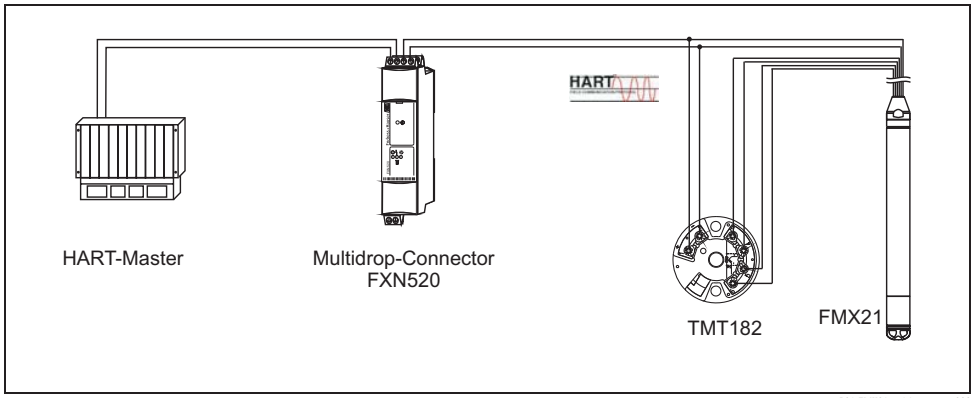

P01-FMX21xx-14-xx-xx-xx-002

US EPA ARCHIVE DOCUMENT

Use an external temperature signal which is transmitted to the FMX21 via HART burst mode

The Waterpilot FMX21 is available with an optional Pt100 temperature sensor. In this case, the signal of the Pt100 is analyzed using a HART-compliant (at least HART 5.0) temperature transmitter that supports BURST mode. The temperature signal can thus be transmitted to the FMX21. The FMX21 uses this signal for the density correction of the level signal.

Note!
The TMT182 temperature head transmitter is not suitable for this configuration.

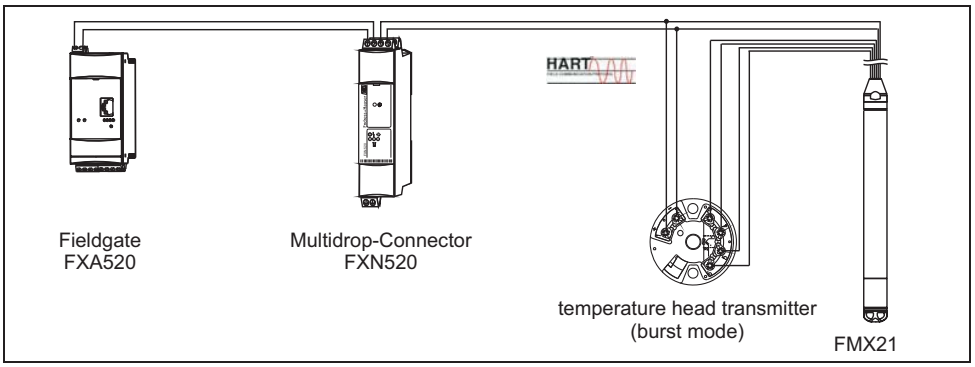

P01-FMX21xx-14-xx-xx-en-007

Without compensation additional errors of up to 4 % can occur at a temperature of 70 °C (158 °F) for example. With density compensation, this error can be decreased to 0.5% in the entire temperature range from 0 to 70 °C (32 to 158 °F).

Note!
For further information on the devices, please refer to the appropriate Technical Information:
- TI00078R: TMT182 temperature head transmitter (4 to 20 mA/HART)
- TI00369F: FXA520 Fieldgate
- TI00400F: FXN520 multidrop connector

Communication protocol

4 to 20 mA HART with communication protocol

System integration

The device can be fitted with a tag name, see → 24 ff "Ordering information", feature 895 "Marking" version "Z1".

US EPA ARCHIVE DOCUMENT

Input

Measured variable

FMX21 + Pt100 (optional)

- Hydrostatic pressure of a liquid
- Pt100: temperature

TMT182 temperature head transmitter (optional)

Temperature

Measuring range

- Customer-specific measuring ranges; factory-calibrated
- Temperature measurement from –10 to +70 °C (+14 to +158 °F) with Pt100 (optional)
- A sensor measuring range turndown (TD) of up to 10:1 can be set at the factory or directly by the customer.

Sensor measuring range [bar (psi)]	Smallest span that can be calibrated [bar (psi)]	Maximum overload/ OPL [1] [bar (psi)]	Vacuum resistance [bar_{abs} (psi_{abs})]	Version in the order code[2]
Gauge pressure				
0.1 (1.5)	0.01 (0.15)	5.0 (75.0)	0.3 (4.5)	1C
0.2 (3.0)	0.02 (0.3)	5.0 (75.0)	0.3 (4.5)	1D
0.4 (6.0)	0.04 (1.0)	6.0 (90.0)	0	1F
0.6 (9.0)	0.06 (1.0)	10.0 (150)	0	1G
1.0 (15.0)	0.1 (1.5)	10.0 (150)	0	1H
2.0 (30.0)	0.2 (3.0)	15.0 (225)	0	1K
4.0 (60.0)	0.4 (6.0)	25.0 (375)	0	1M
10.0 (150) [3]	1.0 (15)	40.0 (600)	0	1P
20.0 (300) [3]	2.0 (30)	40.0 (600)	0	1Q
Absolute pressure				
2.0 (30.0)	0.2 (3.0)	15.0 (225)	0	2K
4.0 (60.0)	0.4 (6.0)	25.0 (375)	0	2M
10.0 (150) [3]	1.0 (15)	40.0 (600)	0	2P
20.0 (300) [3]	2.0 (30)	40.0 (600)	0	2Q

1) OPL: overpressure limit, depending on the weakest element, in terms of pressure, of the selected components

2) See → 24 "Ordering information"

3) These measuring ranges are not offered for the probe version with a coated housing. outer diameter 29 mm (1.14 in) .

Input signal

FMX21 + Pt100 (optional)

- Change in capacitance
- Pt100: change in resistance

TMT182 temperature head transmitter (optional)

Pt100 resistance signal, 4-wire

US EPA ARCHIVE DOCUMENT

Output

Output signal

FMX21 + Pt100 (optional)

- 4 to 20 mA with overlying digital HART 6.0 communication protocol, 2-wire for hydrostatic pressure measured value
- Pt100: Temperature-dependent resistance values

TMT182 temperature head transmitter (optional)

4 to 20 mA with overlying digital HART 5.0 communication protocol for temperature measured value, 2-wire

Signal range

- 3.8 to 20.5 mA

Signal on alarm

FMX21 + Pt100 (optional)

4 to 20 mA/HART
Options:
- Max. alarm (factory setting 22mA): can be set from 21 to 23 mA
- Hold measured value: last measured value is held
- Min. alarm: 3.6 mA

TMT182 temperature head transmitter (optional)

Options:
- Max. alarm ≥ 21.0 mA
- Min. alarm ≤ 3.6 mA

Load

FMX21

$$R_{Lmax} \leq \frac{U - 10.5\ V}{23\ mA} - 2 \cdot 0.9\ \frac{\Omega}{m} \cdot l - R_{add}$$

P01-FMX21xx-16-xx-xx-en-000

TMT182 temperature head transmitter (optional)

$$R_{tot} \leq \frac{U - 11.5\ V}{0.023\ A} - R_{add}$$

P01-FMX21xx-16-xx-xx-en-001

R_{Lmax} = Max. load resistance [Ω]
R_{add} = Additional resistances such as resistance of evaluation unit and/or display unit, cable resistance [Ω]
U = Supply voltage [V]
l = Simple length of extension cable [m] (cable resistance per wire ≤ 0.09 Ω/m)

Note!
When using the measuring device in hazardous areas, installation must comply with the applicable national standards and regulations and the Safety Instructions or Installation or Control Drawings.

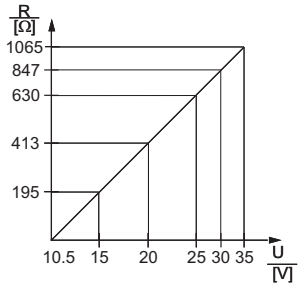

P01-FMX21xxxx-05-xx-xx-xx-000

FMX21 load chart for estimating the load resistance. Additional resistances, such as the resistance of the extension cable, have to be subtracted from the value calculated as shown in the equation.

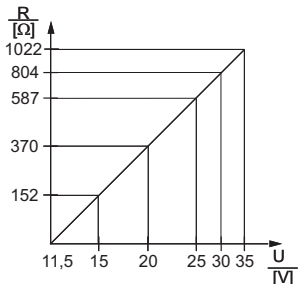

P01-FMXxxxx-05-xx-xx-xx-003

Temperature head transmitter load chart for estimating the load resistance. Additional resistances have to be subtracted from the value calculated as shown in the equation.

Note!
When operating using a HART handheld terminal or a PC with an operating program, a minimum communication resistance of 250 Ω has to be taken into account.

US EPA ARCHIVE DOCUMENT

Resolution	Current output: 1 µA **Read cycle** HART commands: 2 to 3 per second on average
Damping	■ Continuously 0 to 999 s via HART handheld terminal or PC with operating program ■ Factory setting: 2 s

US EPA ARCHIVE DOCUMENT

Mechanical construction

Dimensions of the level probe

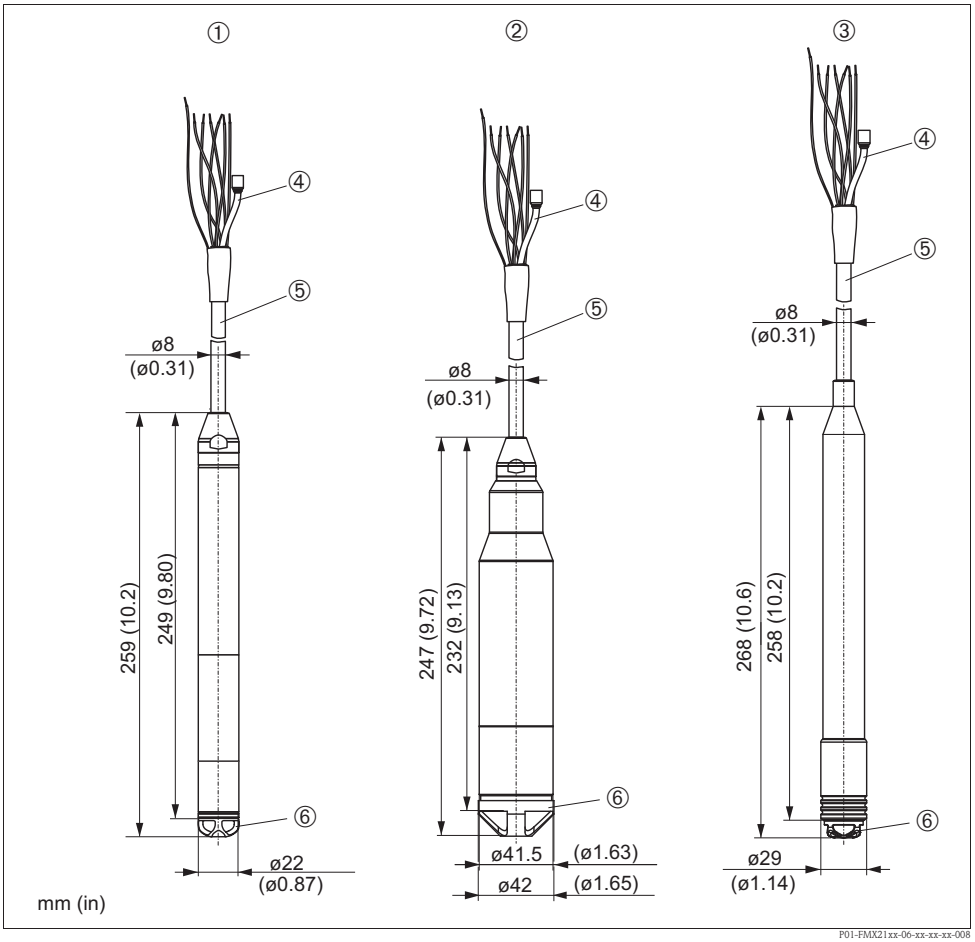

Versions of the FMX21

1 *Version "1" for feature 45 "Probe tube" or "Accessories" in the order code → 24 ff*
2 *Version "2" for feature 45 "Probe tube" in the order code → 24 ff*
3 *Version "5" for feature 45 "Probe tube" in the order code → 24 ff*
4 *Pressure compensation tube*
5 *Extension cable*
6 *Protection cap*

Dimensions of the mounting clamp

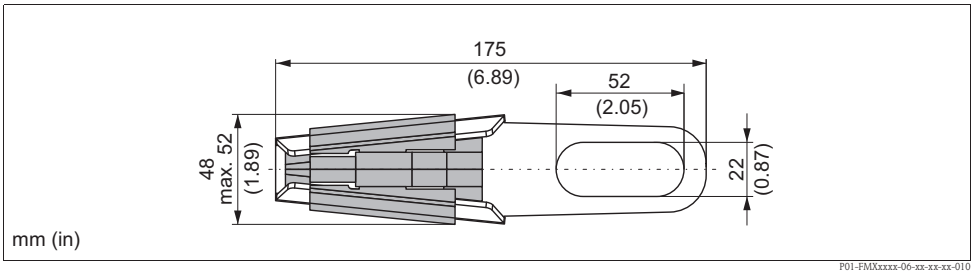

Mounting clamp, version "PO" for feature 620 "Accessories" in the order code → 24 ff

US EPA ARCHIVE DOCUMENT

Dimensions of the extension cable mounting screws

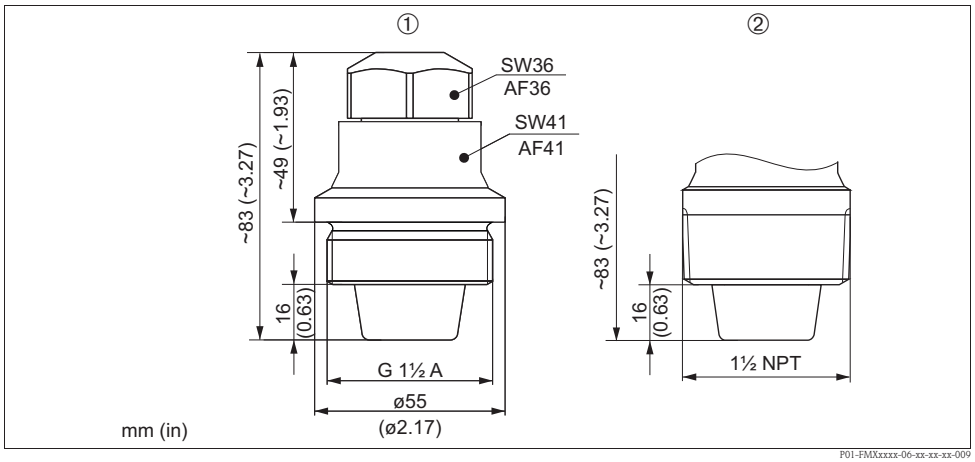

Extension cable mounting screws

1 *Extension cable mounting screw G 1 ½ A, version "PQ" for feature 620 "Accessories" in the order code → 24 ff*
2 *Extension cable mounting screw 1 ½ NPT, version "PR" for feature 620 "Accessories" in the order code → 24 ff*

Note!
Application in unpressurized containers only.

Dimensions of the IP66/IP67 terminal boxes with filters

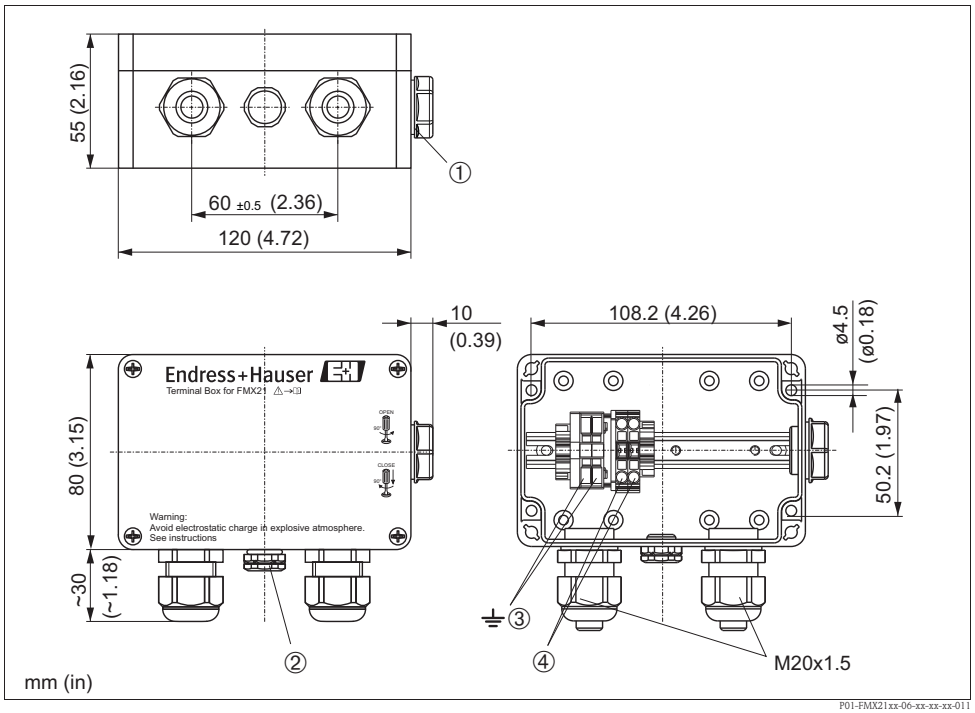

Terminal box / Version "PS" or "PT" for feature 620 "Accessories" in the order code → 24 ff

1 *Dummy plug M20x1.5*
2 *GORE-TEX® filter*
3 *Ground connection / terminals for 0.08 to 2.5 mm² (28 to 14 AWG)*
4 *4 to 20 mA / terminals for 0.08 to 2.5 mm² (28 to 14 AWG)*

If ordered together with FMX21 but without the optional TMT182 temperatur transmitter, the terminal box is incl. a 4-terminal strip.

Note!
The 4-terminal strip is not intended for use in hazardous areas incl. CSA GP.

US EPA ARCHIVE DOCUMENT

Dimensions of the TMT182 temperature head transmitter

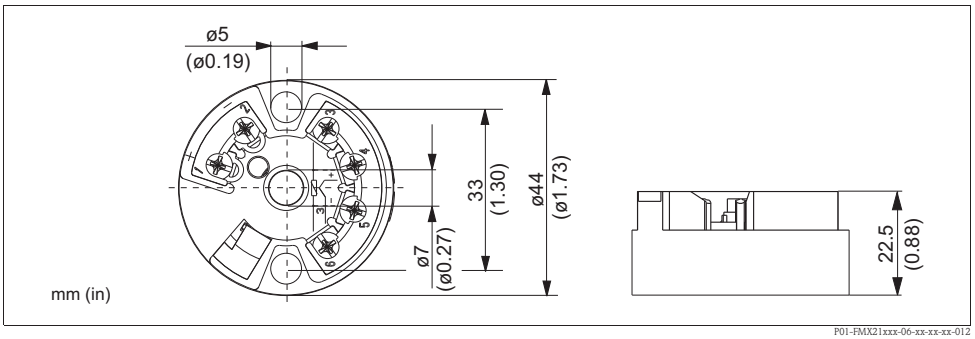

TMT182 temperature head transmitter (4 to 20 mA/HART), version "PT" for feature 620 "Accessories" in the order code → 📄 *24 ff.*

Terminal box with integrated TMT182 temperature head transmitter (4 to 20 mA/ HART)

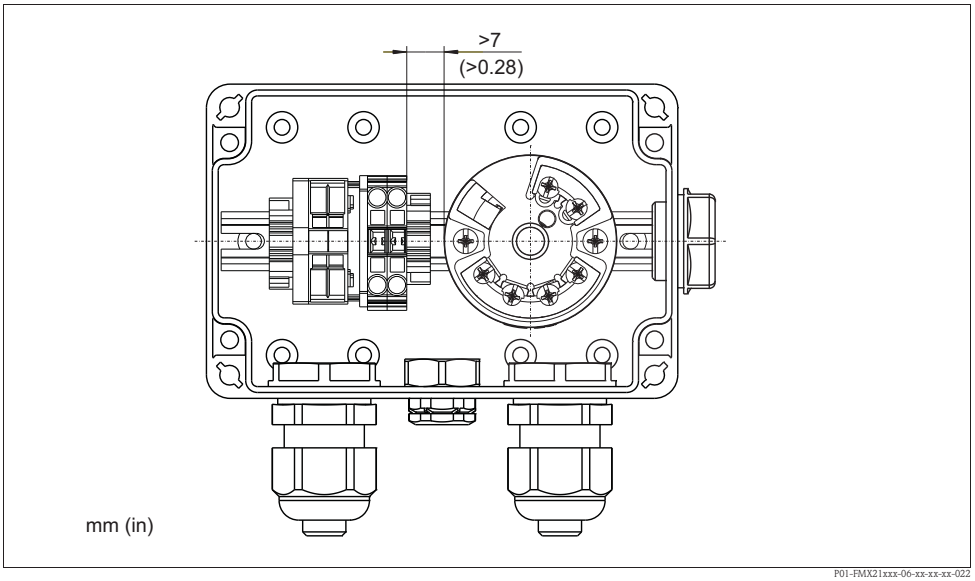

Note!
A distance of >7 mm (>0.28 in mm) must be maintained between the terminal strip and the TMT182 temperature head transmitter.

Weight

- Level probe, outer diameter 22 mm (0.87 in): 344 g (12.133 oz)
- Level probe, outer diameter 29 mm (1.14 in): 394 g (13.896 oz)
- Level probe, outer diameter 42 mm (1.65 in): 1376 g (48.532 oz)
- PE extension cable: 52 g/m (0.33 lbs/1 ft)
- FEP extension cable: 108 g/m (0.072 lbs/1 ft)
- PUR extension cable: 60 g/m (0.039 lbs/1 ft)
- Mounting clamp: 170 g (5.996 oz)
- Extension cable mounting screw G1 ½ A: 770 g (27.158 oz)
- Extension cable mounting screw 1½ NPT: 724 g (25.535 oz)
- Terminal box: 235 g (8.288 oz)
- Temperature head transmitter: 40 g (1.411oz)
- Additional weight: 300 g (1.376 oz)
- Adapter weight: 39 g

US EPA ARCHIVE DOCUMENT

Material

- Level probe, outer diameter 22 mm (0.87 in): 1.4435 (AISI 316L)
- Level probe, outer diameter 29 mm (1.14 in): 1.4435 (AISI 316L)
  - Sensor sleeve: PPS (polyphenylene sulfide); heat-shrink tube/cover: polyolefin.
    The materials used ensure that metal does not come in contact with the medium.
- Level probe, outer diameter 42 mm (1.65 in): 1.4435 (AISI 316L)
- Process ceramic: Al_2O_3 aluminum oxide ceramic
- Seal (internal): EPDM or Viton
- Protection cap: – PPO (polyphenylene oxide) for FMX21 with outer diameter 22 mm and 29 mm.
  – PFA (perfluoroalkoxy) for FMX21 with outer diameter 42 mm.
- Extension cable insulation: either PE-LD (low-density polyethylene), FEP (fluorinated ethylene propylene) or PUR (polyurethane), for further information, see → 🗎 21 "Extension cable".
- Mounting clamp: 1.4404 (AISI 316L) and fiberglass reinforced PA (polyamide)
- Extension cable mounting screw G1½ A: 1.4301 (AISI 304)
- Extension cable mounting screw 1½ NPT: 1.4301 (AISI 304)
- Terminal box: PC (polycarbonate)
- Temperature head transmitter: PC housing (polycarbonate)

Extension cable

PE extension cable

- Abrasion-resistant extension cable with Dynema strain-relief members; shielded with aluminum-coated film; insulated with polyethylene (PE), black; copper wires, twisted
- Pressure compensation tube with Teflon filter

PUR extension cable

- Abrasion-resistant extension cable with Dynema strain-relief members; shielded with aluminum-coated film; insulated with polyurethane (PUR), black; copper wires, twisted
- Pressure compensation tube with Teflon filter

FEP extension cable

- Abrasion-resistant extension cable; shielded with galvanized steel wire netting; insulated with fluorinated ethylene propylene (FEP), black; copper wires, twisted
- Pressure compensation tube with Teflon filter

Cross-section of PE/PUR/FEP extension cable

- Total outer diameter: 8.0 mm (0.31 in) ±0.25 mm (±0.01 in)
- FMX21: 3 x 0.227 mm^2 (3 x 26 AWG) + pressure compensation tube with Teflon filter
- FMX21 with Pt100 (optional): 7x 0.227 mm^2 (7x 26 AWG) + pressure compensation tube with Teflon filter
- Pressure compensation tube with Teflon filter: outer diameter 2.5 mm (0.1 in), internal diameter 1.5 mm (0.06 in)

Cable resistance of PE/PUR/FEP extension cable

- Cable resistance per wire: ≤ 0.09 Ω/m

Cable length of PE/PUR/FEP extension cable

- Please refer also to → 🗎 10, Chap. "Load".
- Cable length that can be ordered
  - Customer-specific length in meters or feet (→ 🗎 24, "Ordering information")
  - Limited cable length when performing installation with freely suspended device with extension cable mounting screw or mounting clamp, as well as for hazardous areas: max. 300 m (984 ft).
- When using the measuring device in hazardous areas, installation must comply with the applicable national standards and regulations and the Safety Instructions (XAs) or the Installation or Control Drawings (ZDs) "Additional documentation".

Further technical data for PE/PUR/FEP extension cable

- Minimum bending radius: 120 mm (4.72 in)
- Tensile strength: max. 950 N (213.56 lbf)
- Cable extraction force: typical ≥400 N (89.92 lbf) PE, FEP / typical ≥150 N (33.72 lbf) PUR
  (The extension cable could be extracted from the level probe with a appropriate tensile force.)
- Resistance to UV light
- PE: Approved for use with drinking water

Terminals

- Three terminals as standard in the terminal box
- 4-terminal strip can be ordered as an accessory, Order No: 52008938
  Conductor cross-section 0.08 to 2.5 mm^2 (28 to 14 AWG)

Note!
The 4-terminal strip is not intended for use in hazardous areas incl. CSA GP.

US EPA ARCHIVE DOCUMENT

US EPA ARCHIVE DOCUMENT

Instruments International

Endress+Hauser
Instruments International AG
Kaegenstrasse 2
4153 Reinach
Switzerland

Tel. +41 61 715 81 00
Fax +41 61 715 25 00
www.endress.com
info@ii.endress.com

Endress+Hauser
People for Process Automation

TI00431P/00/EN/13.11
71129098
CCS/FM+SGML 6.0

71129098

US EPA ARCHIVE DOCUMENT

Level Pressure Flow Temperature Liquid Analysis Registration Systems Components Services Solutions

Technical Information

Levelflex M FMP40

Guided Level Radar
Continuous Level Transmitter for
– Level Measurement in Bulk Solids and Liquids
– Interface Measurement in Liquids

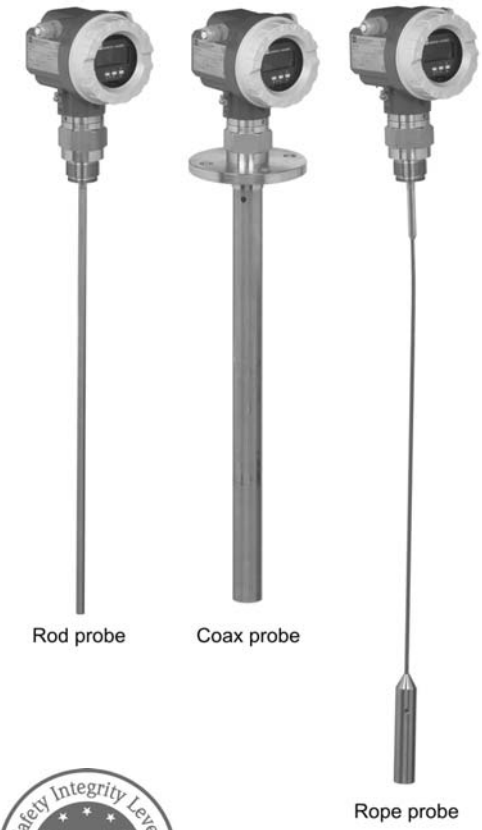

Application

Level measurement
Continuous level measurement of powdery to granular bulk solids e.g. plastic granulate and liquids.

- Measurement independent of density or bulk weight, conductivity, dielectric constant, temperature and dust e.g. during pneumatic filling.
- Measurement is also possible in the event of foam or if the surface is very turbulent.
- The HART with 4 to 20 mA analog, PROFIBUS PA and FOUNDATION Fieldbus protocols are available for system integration.
- Application in safety related systems (overspill protection) with requirements for functional safety up to SIL 2 in accordance with IEC 61508/IEC 61511-1.
- WHG approval

Interface measurement
Continuous measurement of interfaces between two liquids with very different dielectric constants, such as in the case of oil and water for example.

- Measurement independent of density, conductivity and temperature
- Electronics version for the simultaneous measurement of the level of interfaces and the total level in liquids. The HART with 4 to 20 mA analog protocol is available for system integration
- Special version for the measurement of the level of interfaces at a constant total level. The PROFIBUS PA and FOUNDATION Fieldbus protocols are available for system integration.

Your benefits

Probes are available with threaded process connections from ¾" and flanges from DN40 (1½").

- Rope probes, above all for measurement in bulk solids, measuring range up to 35 m.
- Rod probes, above all for liquids
- Coax probes, for liquids
- Simple, menu-guided onsite operation with four-line plain text display.
- Onsite envelope curve on the display for easy diagnosis.
- Easy remote operation, diagnosis and measuring point documentation with the free operating program supplied.
- Optional remote display and operation.
- With coax probes the measurement is independent of internals in the tank and of the installation in the nozzle.
- Probe rod and probe rope can be replaced/shortened.
- Approvals: ATEX, FM, CSA, TIIS, NEPSI, IECEx.

TI00358F/00/EN/13.10
71120339

Endress+Hauser
People for Process Automation

Function and system design

Measuring principle

The Levelflex is a "downward-looking" measuring system that functions according to the ToF method (ToF = Time of Flight). The distance from the reference point (process connection of the measuring device, → 📄 43) to the product surface is measured. High-frequency pulses are injected to a probe and led along the probe. The pulses are reflected by the product surface, received by the electronic evaluation unit and converted into level information. This method is also known as TDR (Time Domain Reflectometry).

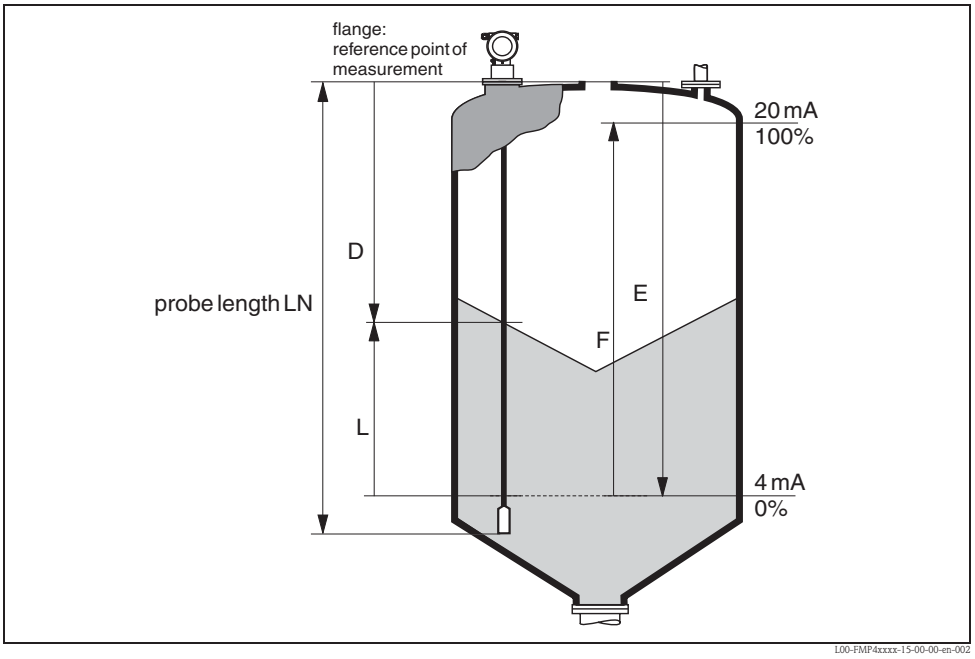

Reference point of the measurement, details → 📄 43

Dielectric constant

The dielectric constant (DC) of the medium has a direct impact on the degree of reflection of the high-frequency pulses. In the case of large DC values, such as for water or ammonia, there is strong pulse reflection while, with low DC values, such as for hydrocarbons, weak pulse reflection is experienced.

Input

The reflected pulses are transmitted from the probe to the electronics. There, a microprocessor analyzes the signals and identifies the level echo which was generated by the reflection of the high-frequency pulses at the product surface. This clear signal detection system benefits from over 30 years' experience with pulse time-of-flight procedures that have been integrated into the development of the PulseMaster® software.
The distance "D" to the product surface is proportional to the time of flight t of the impulse:

$D = c \cdot t/2$,
where c is the speed of light.

Based on the known empty distance "E", the level "L" is calculated:

$L = E - D$

Reference point for "E" see diagram above.

The Levelflex possesses functions for interference echo suppression that can be activated by the user.
They guarantee that interference echoes from e.g. internals and struts are not interpreted as level echoes.

US EPA ARCHIVE DOCUMENT

Interface measurement

When the high-frequency pulses hit the surface of the medium, only a percentage of the transmission pulse is reflected. In the case of media with a low DC_1, in particular, the other part penetrates the medium. The pulse is reflected once more at the interface point to a second medium with a higher DC_2. The distance to the interface layer now can also be determined taking into account the delayed time-of-flight of the pulse through the upper medium.

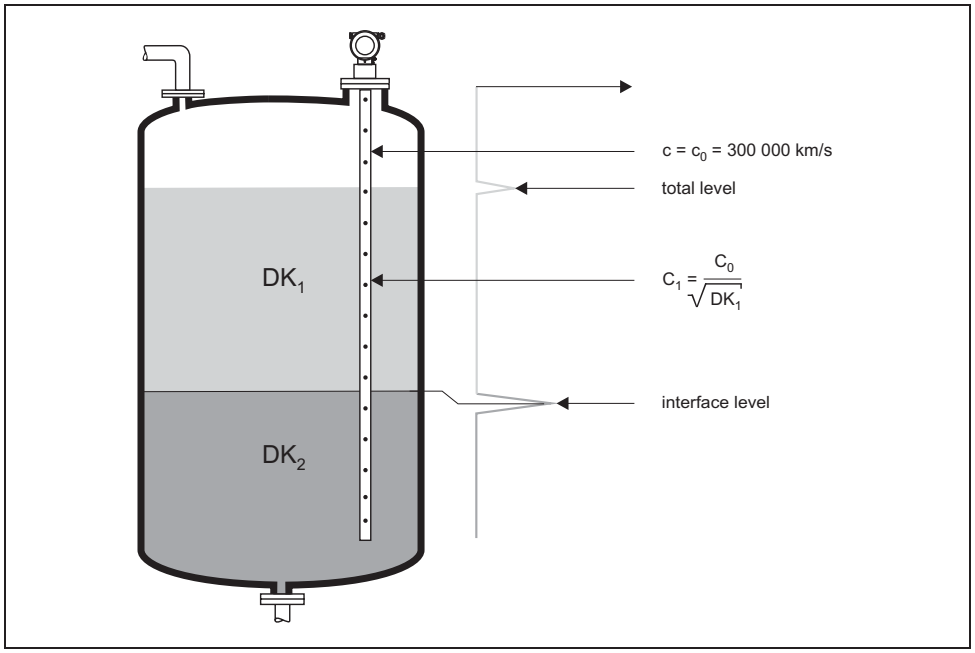

L00-FMP4xxxx-15-00-00-en-007

Output

The Levelflex is preset at the factory to the probe length ordered so that in most cases only the application parameters that automatically adapt the device to the measuring conditions need to be entered. For models with a current output, the factory adjustment for zero point "E" and span "F" is 4 mA and 20 mA. For digital outputs and the display module, the factory adjustment for zero point "E" and span "F" is 0 % and 100 %.
A linearization function with max. 32 points, which is based on a table entered manually or semi-automatically, can be activated on site or via remote operation. This function allows the level to be converted into units of volume or mass, for example.

US EPA ARCHIVE DOCUMENT

Measuring system

Probe selection

The various types of probe in combination with the process connections are suitable for the following applications:

Probes with 1½" threaded connection or flange

Type of probe:	6 mm rope probe	6 mm rope probe PA-coated [1]	4 mm rope probe	16 mm rod robe	16 mm rod probe, separable probe	Coax probe
Max. probe length:	35 m [2]	35 m [2]	Liquids: 35 m Bulk solids: 15 m	4 m	10 m	4 m
For application:	■ Bulk solids	■ Bulk solids especially cereal, flour	■ Liquids measuring range > 4 m	■ Liquids ■ bulk solids on short measuring ranges and sideway mounting ■ Interface measurement	■ Liquids ■ cramped mounting position (limited head clearance) ■ Interface measurement	■ Liquids ■ Interface measurement
Sideways capacity:	not relevant	not relevant	not relevant	30 Nm	20 Nm	300 Nm
Tensile loading capacity (min.): **rupture load (max.):** [3]	30 kN 35 kN	30 kN 35 kN	12 kN 16 kN	not relevant	not relevant	not relevant
Feature 30	**Option "B"**	**Option "H"**	**Option "A"**	**Option "K"**	**Option "S, T, U, V"**	**Option "L"**

1) ø6 mm + 2 mm PA coating.

2) Greater lengths available on request.

3) Max. load of silo ceiling. If overloaded, the rope tears; the bushing remains air-tight.

US EPA ARCHIVE DOCUMENT

US EPA ARCHIVE DOCUMENT

Probes with ¾" threaded connection

Type of probe:	4 mm rope probe	6 mm rod probe	Coax probe
Max. probe length:	35 m [1]	2 m	4 m
For application:	■ Liquids measuring range > 4 m	■ Liquids ■ Interface measurement	■ Liquids ■ Interface measurement
Sideways capacity:	not relevant	4 Nm	60 Nm
Tensile loading capacity (min.): **rupture load (max.):** [2]	5 kN 12 kN	not relevant	not relevant
Feature 30	**Option "A"**	**Option "P"**	**Option "L"**

1) Greater lengths available on request.

2) Max. load of silo ceiling. If overloaded, the rope tears; the bushing remains air-tight.

Stand-alone

- Power supply directly from power line (4-wire) or from transmitter power supply unit (2-wire).
- Onsite operation with integrated display or remote operation with HART protocol.

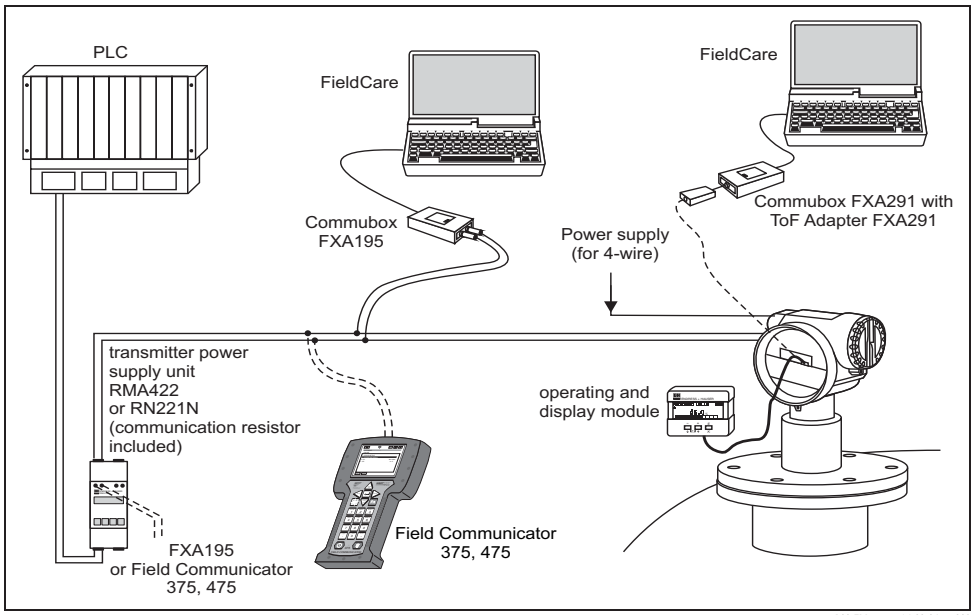

L00-FMxxxxxx-14-00-06-en-008

US EPA ARCHIVE DOCUMENT

System integration via PROFIBUS PA

Maximum 32 transmitters (depending on the segment coupler, 10 in the Ex ia IIC hazardous area according to the FISCO Model) can be connected to the bus. The Bus voltage is supplied by the segment coupler. Both onsite as well as remote operation are possible.

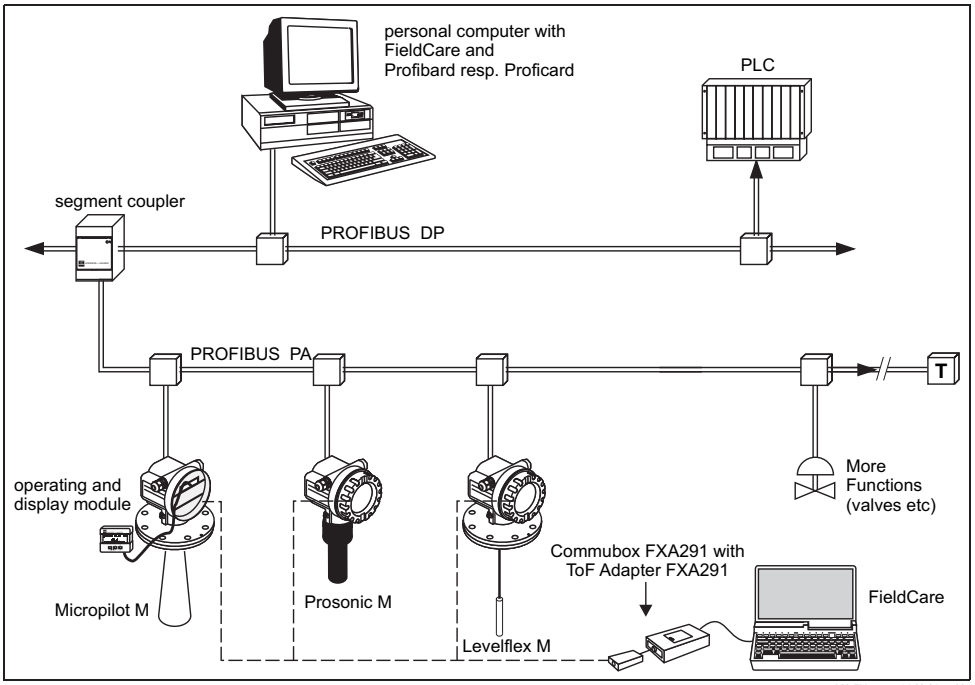

System integration via FOUNDATION Fieldbus

Max. 32 transmitters (standard, Ex em or Ex d) can be connected to the bus. In Ex ia IIC explosion protection: the max. number of transmitters is based on the applicable regulations and standards for interconnecting intrinsically safe circuits (EN 60079-14, proof of intrinsic safety). Both onsite as well as remote operation are possible. The complete measuring system consists of:

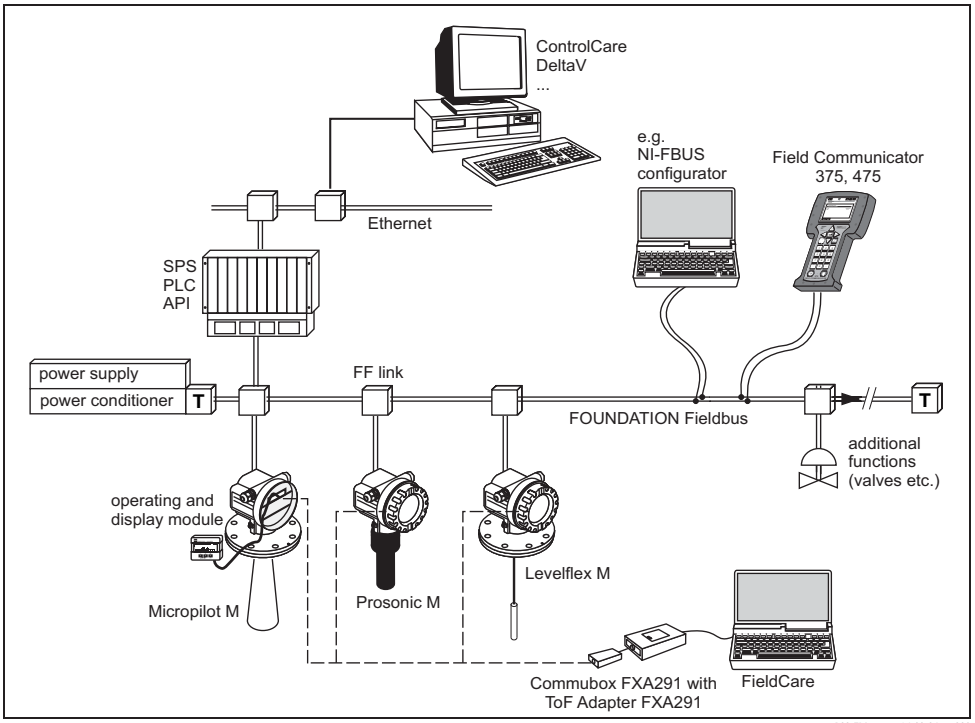

Integration into the tank gauging system

The Endress+Hauser Tank Side Monitor NRF590 provides integrated communications for sites with multiple tanks, each with one or more sensors on the tank, such as radar, spot or average temperature, capacitive probe for water detection and/or pressure sensors. Multiple protocols out of the Tank Side Monitor guarantee connectivity to nearly any of the existing industry standard tank gauging protocols.
Optional connectivity of analog 4 to 20 mA sensors, digital I/O and analog output simplify full tank sensor integration. Use of the proven concept of the intrinsically safe HART bus for all on-tank sensors yields extremely low wiring costs, while at the same time providing maximum safety, reliability and data availability.

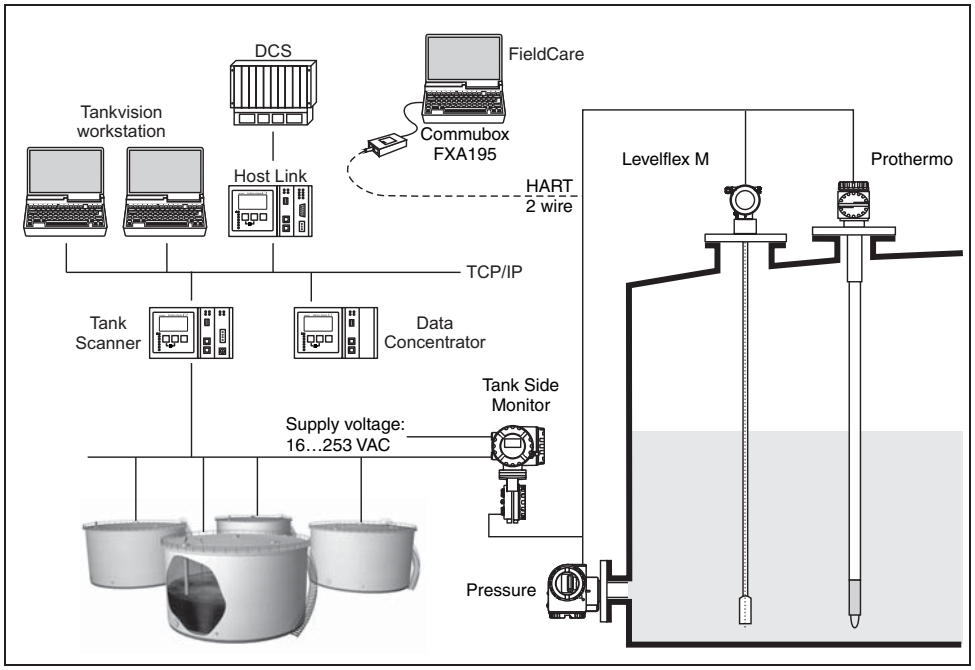

L00-FMPxxxxx-14-00-06-en-004

US EPA ARCHIVE DOCUMENT

US EPA ARCHIVE DOCUMENT

System integration via Fieldgate

Vendor Managed Inventory

By using Fieldgates to interrogate tank or silo levels remotely, suppliers of raw materials can provide their regular customers with information about the current supplies at any time and, for example, account for them in their own production planning. For their part, the Fieldgates monitor the configured level limits and, if required, automatically activate the next supply. The spectrum of options here ranges from a simple purchasing requisition via e-mail through to fully automatic order administration by coupling XML data into the planning systems on both sides.

Remote maintenance of measuring equipment

Fieldgates not only transfer the current measured values, they also alert the responsible standby personnel, if required, via e-mail or SMS. In the event of an alarm or also when performing routine checks, service technicians can diagnose and configure connected HART devices remotely. All that is required for this is the corresponding HART operating software (e.g. FieldCare) for the connected device. Fieldgate passes on the information transparently, so that all options for the respective operating software are available remotely. Some onsite service operations can be avoided by using remote diagnosis and remote configuration and all others can at least be better planned and prepared.

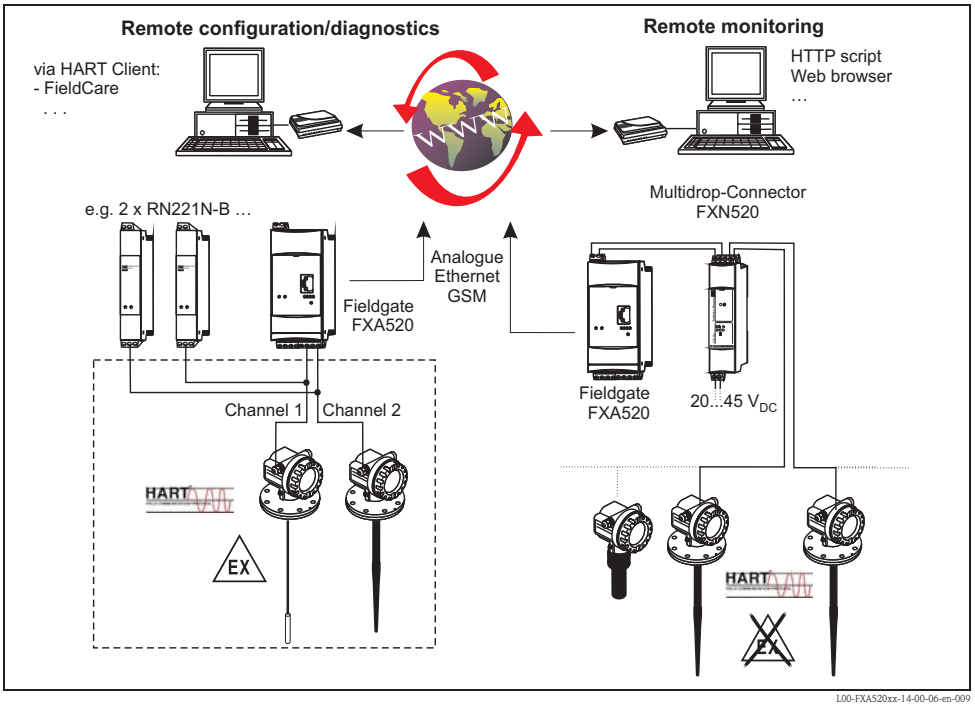

Note!
The number of devices which can be connected in multidrop mode can be calculated by the "FieldNetCalc" program. A description of this program can be found in Technical Information TI00400F/00/EN (Multidrop Connector FXN520).
The program is available from your Endress+Hauser sales organization or on the Internet at: www.endress.com. → select your country → download → search: Fieldnetcalc.

Input

Measured variable

The measured variable is the distance between the reference point (see Fig., → 📄 43) and the product surface. Subject to the empty distance entered "E" (see Fig., → 📄 4), the level is calculated. Alternatively, the level can be converted into other variables (volume, mass) by means of linearization (32 points).

Measuring range

Level measurement

The following table describes the media groups and the possible measuring range as a function of the media group.

Medium group	DC (Εr)	Typical bulk solids	Typical liquids	Measuring range	
				bare metallic probes	PA-coated Rope probes
1	1.4 to 1.6	-	– Condensed gases, e.g. N_2, CO_2	4 m, only coax probe	-
2	1.6 to 1.9	– Plastic granulate – White lime, special cement – Sugar	– Liquefied gas, e.g. propane – Solvent – Freon – Palm oil	25 m to 30 m	12.5 m to 15 m
3	1.9 to 2.5	– Portland cement, plaster	– Mineral oils, fuels	30 m to 35 m	-
		– Flour	-	-	15 m to 25 m
4	2.5 to 4	– Grain, seeds	–	–	25 m to 30 m
		– Ground stones – Sand	– Benzene, styrene, toluene – Furan – Naphthalene	35 m	25 m to 30 m
5	4 to 7	– Naturally moist (ground) stones, ores – Salt	– Chlorobenzene, chloroform – Cellulose spray – Isocyanate, aniline	35 m	35 m
6	> 7	– Metallic powder – Carbon black – Coal	– Aqueous solutions – Alcohols – Ammonia	35 m	35 m

The respective lower group applies for very loose or loosened bulk solids.

Reduction of the max. possible measuring range through:
- Extremely loose surfaces of bulk solids, e.g. bulk solids with low bulk weight for pneumatic filling.
- Buildup, above all of moist products.

Note!
Due to the high diffusion rate of ammonia it is recommended to use the FMP45 with gas-tight bushing for measurements in this medium.

Interface measurement

The measuring range for interface measurement is limited to 10 m. Larger measuring range available on request.

US EPA ARCHIVE DOCUMENT

Blocking distance

The upper blocking distance (= UB) is the minimum distance from the reference point of the measurement (mounting flange) to the maximum level. At the lowest part of the probe an exact measurement is not possible, see "Performance characteristics", → 20.

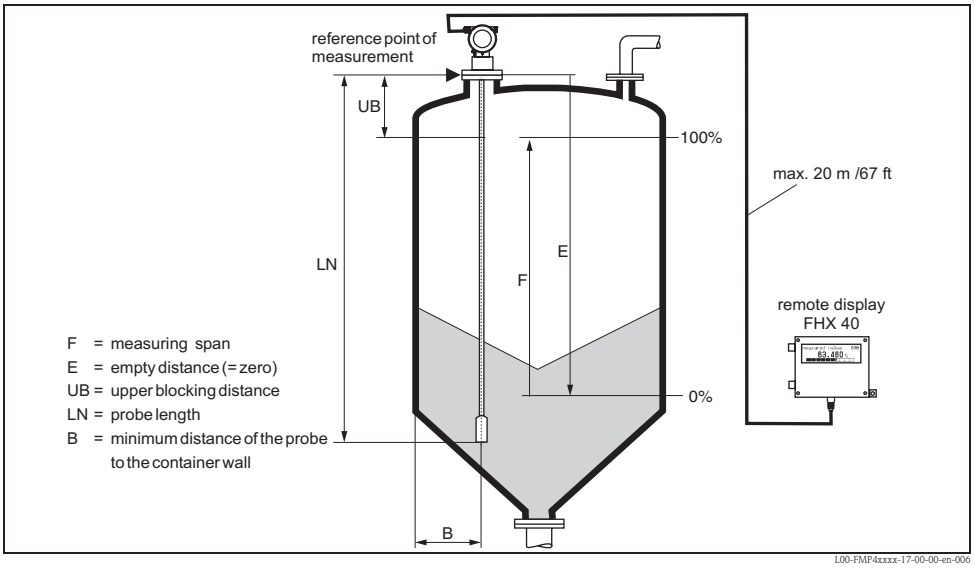

Reference point of the measurement, details → 43

Blocking distance and measuring range:

FMP40	LN [m] min	LN [m] max	UB [m] min
Rope probe	1	35 [1]	0.2 [2]
6 mm rod probe	0.3	2	0.2 [2]
16 mm rod robe	0.3	4	0.2 [2]
Coax probe	0.3	4	0

1) Larger measuring range available on request.

2) The indicated blocking distances are preset. At media with DC > 7, the upper blocking distance UB can be reduced for rod and rope probes on 0.1 m. The upper blocking distance UB can be entered manually.

FMP40 (interface)	LN [m] min	LN [m] max	UB [m] min
Coax probe	0.3	4	0
16 mm rod probe in the bypass	0.3	4	0.1 [1]
6 mm rod probe in the bypass	0.3	2	0.1 [1]
Rope probe in free field [2]	0.3	10 [3]	0.1 [1]

1) The indicated blocking distances are preset. The upper blocking distance UB can be entered manually.

2) Measurements in free field available on request.

3) Larger measuring range available on request.

Note!
Within the blocking distance, a reliable measurement can not be guaranteed.

Used frequency spectrum

100 MHz to 1.5 GHz

US EPA ARCHIVE DOCUMENT

Output

Output signal

- 4 to 20 mA (invertible) with HART protocol
- PROFIBUS PA:
  - signal coding: Manchester Bus Powered (MBP)
  - data transmission rate: 31.25 KBit/s, voltage mode
- FOUNDATION Fieldbus (H1):
  - signal coding: Manchester Bus Powered (MBP)
  - data transmission rate: 31.25 KBit/s, voltage mode

Signal on alarm

Error information can be accessed via the following interfaces:
- Local display:
  - Error symbol
  - Plain text display
- Current output, signal on error can be selected (e.g. according to NAMUR recommendation NE43)
- Digital interface

Linearization

The linearization function of the Levelflex M allows the conversion of the measured value into any unit of length or volume and mass or %. Linearization tables for calculating the volume in cylindrical tanks are preprogrammed. Other tables of up to 32 value pairs can be entered manually or semi-automatically. The creation of a linearization table with FieldCare is particularly convenient.

Data of the FOUNDATION Fieldbus interface

Basic Data

Device Type	1012 (hex)
Device Revision	04 (hex)
DD Revision	02 (hex)
CFF Revision	02 (hex)
ITK Version	4.61
ITK-Certification Driver-No.	www.endress.com / www.fieldbus.org
Link-Master (LAS) cabable	Yes
Link Master / Basic Device selectable	Yes; Default: Basic Devce
Number VCRs	24
Number of Link-Objects in VFD	24

Virtual communication references (VCRs)

Permanent Entries	1
Client VCRs	0
Server VCRs	24
Source VCRs	23
Sink VCRs	0
Subscriber VCRs	23
Publisher VCRs	23

Link Settings

Slot time	4
Min. Inter PDU delay	6
Max. response delay	10

US EPA ARCHIVE DOCUMENT

Transducer Blocks

Block	Content	Output values
Sensor Block	Contains all parameters related to the measurement	■ Level or volume[1)] (channel 1) ■ Distance (channel 2)
Diagnsotic Block	Contains diagnostiv information	No output values
Display Block	Contains parameters to configure the local display	No output values

1) Depending on the configuration of the sensor-block.

Function Blocks

Block	Content	Execution time	Functionality
Resource Block	The Resource Block contains all the data that uniquely identifies the field device. It is an electronic version of a nameplate of the device.		enhanced
Analog Input Block 1 Analog Input Block 2	The AI block takes the manufacturer's input data, selected by channel number, and makes it available to other function blocks at its output.	30 ms	standard
PID Block	The PID block serves as proportional-integral-derivative controller and is used almost universally to do closed-loop-control in the field including cascade and feedforward.	80 ms	standard
Arithmetic Block	This block is designed to permit simple use of popular measurement math functions. The user does not have to know how to write equations. The math algorithm is selected by name, chosen by the user for the function to be done.	50 ms	standard
Input Selector Block	The input selector block provides selection of up to four inputs and generates an output based on the configured action. This block normally receives its inputs from AI blocks. The block performs maximum, minimum, middle, average and "first good" signal selection.	30 ms	standard
Signal Characterizer Block	The signal characterizer block has two sections, each with an output that is a non-linear function of the respective input. The non-linear function is determined by a single look-up table with 21 arbitrary x-y pairs.	40 ms	standard
Integrator Block	The Integrator Function Block integrates a variable as a function of the time or accumulates the counts from a Pulse Input block. The block may be used as a totalizer that counts up until reset or as a batch totalizer that has a setpoint, where the integrated or accumulated value is compared to pre-trip and trip settings, generating discrete signals when these settings are reached.	60 ms	standard

US EPA ARCHIVE DOCUMENT

Mechanical construction

Design, dimensions

Housing dimensions

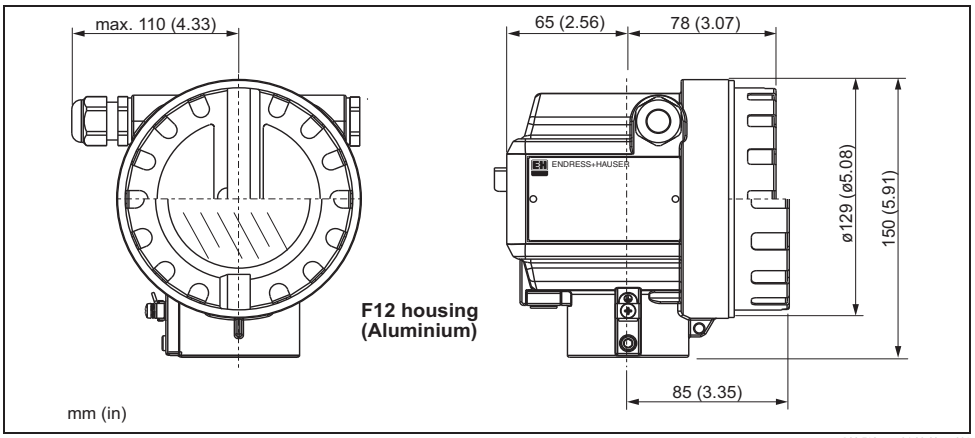

L00-F12xxxx-06-00-00-en-001

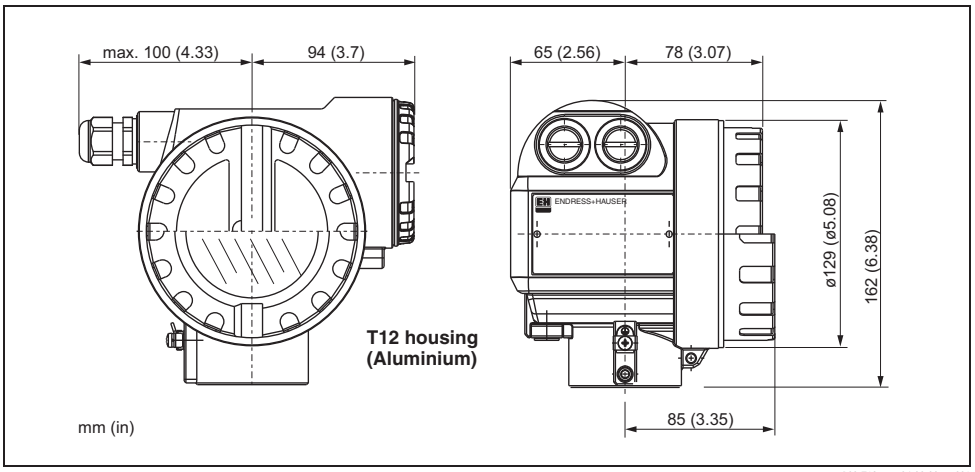

L00-T12xxxx-06-00-00-en-001

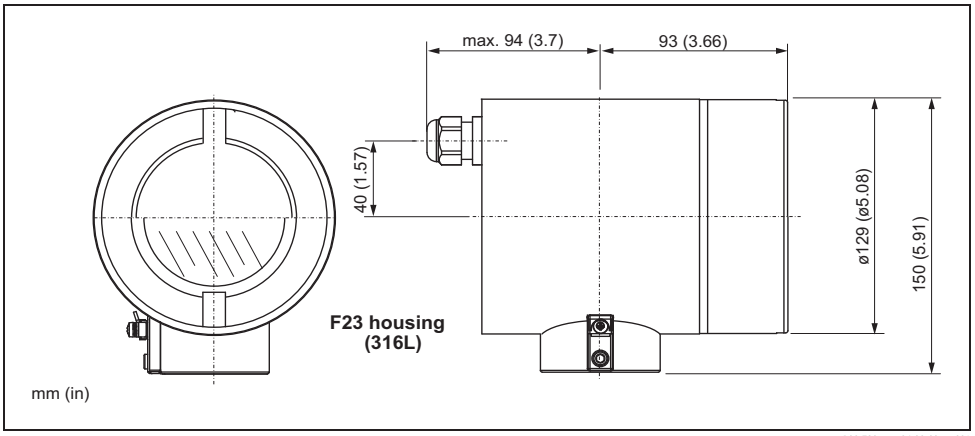

L00-F23xxxx-06-00-00-en-001

US EPA ARCHIVE DOCUMENT

Process connection, probe type

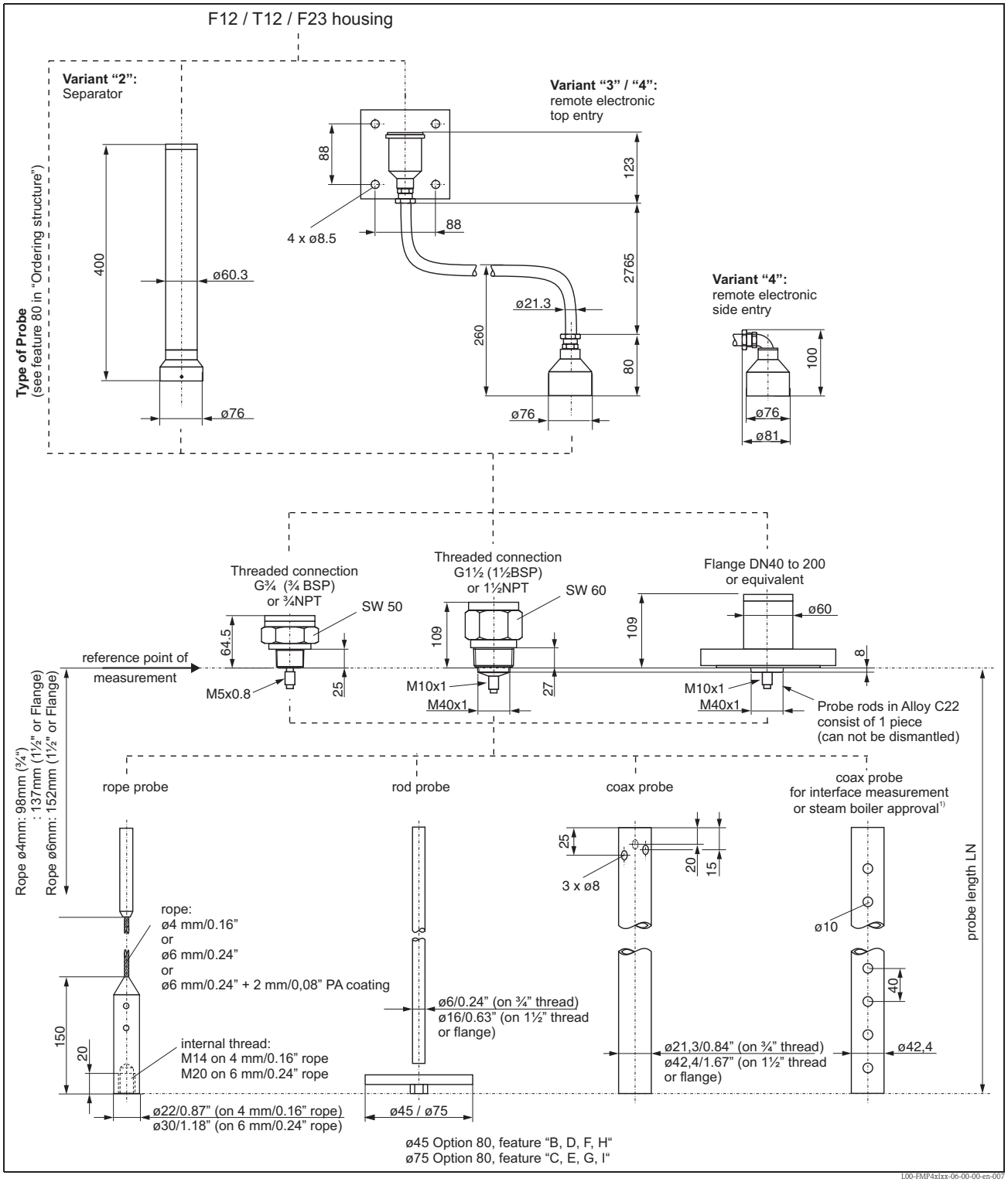

1) see SD00288F/00/EN "Steam boiler approval".

US EPA ARCHIVE DOCUMENT

General information on flanges

The surface roughness of the surface in contact with the medium, including the sealing surface of the flanges (all standards) made of Hastelloy C, Monel or Tantas, is Ra3.2. Lower surface roughness levels are available on request.

Tolerance of probe length

	Rod probes / Coax probes				Rope probes			
Over		1 m	3 m	6 m		1 m	3 m	6 m
Up to	1 m	3 m	6 m		1 m	3 m	6 m	
Admissible tolerance (mm)	- 5	- 10	- 20	- 30	- 10	- 20	- 30	- 40

Weight

Levelflex M	FMP40 + rope probe 4 mm	FMP40 + rod or rope probe 6 mm	FMP40 + rod probe 16 mm	FMP40 Coax probe
Weight for F12 or T12 housing	Approx. 4 kg + Approx. 0.1 kg/m Probe length + weight of flange	Approx. 4 kg + Approx. 0.2 kg/m Probe length + weight of flange	Approx. 4 kg + Approx. 1.6 kg/m Probe length + weight of flange	Approx. 4 kg + Approx. 3.5 kg/m Probe length + weight of flange
Weight for F23 housing	Approx. 7.4 kg + Approx. 0.1 kg/m Probe length + weight of flange	Approx. 7.4 kg + Approx. 0.2 kg/m Probe length + weight of flange	Approx. 7.4 kg + Approx. 1.6 kg/m Probe length + weight of flange	Approx. 7.4 kg + Approx. 3.5 kg/m Probe length + weight of flange

US EPA ARCHIVE DOCUMENT

Material
(not in contact with process)

T12 and F12 housing (seawater-resistant*, powder-coated)

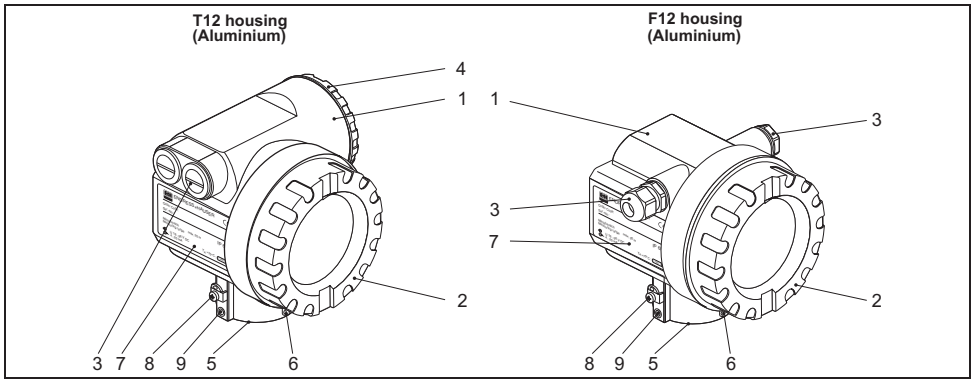

Pos.	Part	Material	
1	T12 and F12 housing	AlSi10Mg	
2	Cover (Display)	AlSi10Mg	
	Sealing	Fa. SHS: EPDM 70pW FKN	
	Window	ESG-K-Glass (Toughened safety glass)	
	Sealing of the glass	Silicone sealing compound Gomastit 402	
3	Sealing	Fa. SHS: EPDM 70 pW FKN	Trelleborg: EPDM E7502
	Cable gland	Polyamid (PA), CuZn nickel-plated	
	Plug	PBT-GF30	1.0718 galvanized
		PE	3.1655
	Adapter	316L (1.4435)	AlMgSiPb (anodized)
4	Cover (Connection compartment)	AlSi10Mg	
	Sealing	Fa. SHS: EPDM 70pW FKN	Trelleborg: EPDM E7502/E7515
	Clamp	Screws: A4; Clamp: Ms nickel-plated; Spring washer: A4	
5	Sealing ring	Fa. SHS: EPDM 70pW FKN	Trelleborg: EPDM E7502/E7515
6	Tag*	304 (1.4301)	
	Rope	316 (1.4401)	
	Crimp sleeve	Aluminium	
7	Nameplate*	304 (1.4301)	
	Groove pin*	A2	
8	Ground terminal*	Screws: A2; Spring washer: A4; Clamp: 304 (1.4301) Holder: 301 (1.4310)	
9	Screws*	A2-70	

* Seawater-resistant on request (complete in 316L (1.4404)).

US EPA ARCHIVE DOCUMENT

F23 housing (seawater-resistant*, corrosion-resistant)

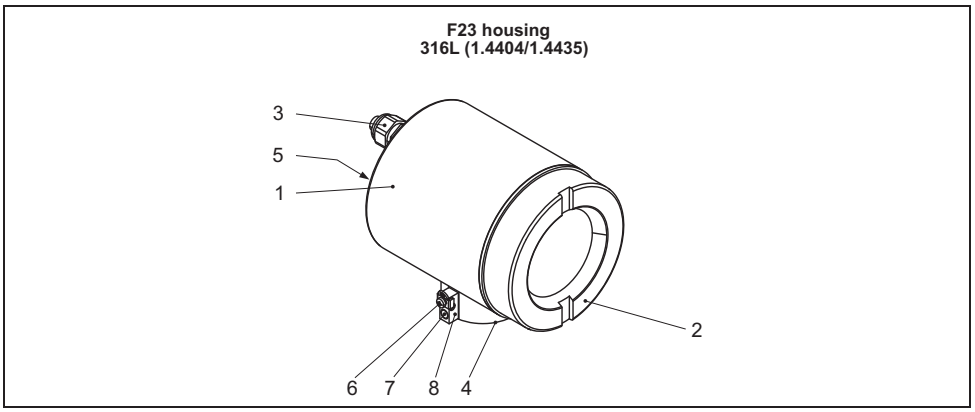

L00-x12xxxx-16-00-00-en-001

Pos.	Part	Material	
1	F23 housing	Housing body: 316L (1.4404); Sensor neck: 316L (1.4435); earth connection block: 316L (1.4435)	
2	Cover	316L (1.4404)	
	Sealing	Fa. SHS: EPDM 70pW FKN	
	Window	ESG-K-Glass (Toughened safety glass)	
	Sealing of the glass	Silicone sealing compound Gomastit 402	
3	Sealing	Fa. SHS: EPDM 70pW FKN	Trelleborg: EPDM E7502
	Cable gland	Polyamid (PA), CuZn nickel-plated	
	Plug	PBT-GF30	1.0718 galvanized
		PE	3.1655
	Adapter	316L (1.4435)	
4	Sealing ring	Fa. SHS: EPDM 70pW FKN	Trelleborg: EPDM E7502
5	Nameplate*	304 (1.4301)	
	Groove pin*	A2	
6	Grounding terminal*	Screws: A2; Spring washer: A4; Clamp: 304 (1.4301); Holder: 301 (1.4310)	
7	Screw*	A2-70	
8	Tag*	304 (1.4301)	
	Rope	316 (1.4401)	
	Crimp sleeve	Aluminium	

* Seawater-resistant on request (complete in 316L (1.4404)).

US EPA ARCHIVE DOCUMENT

US EPA ARCHIVE DOCUMENT

Wall and pipe bracket

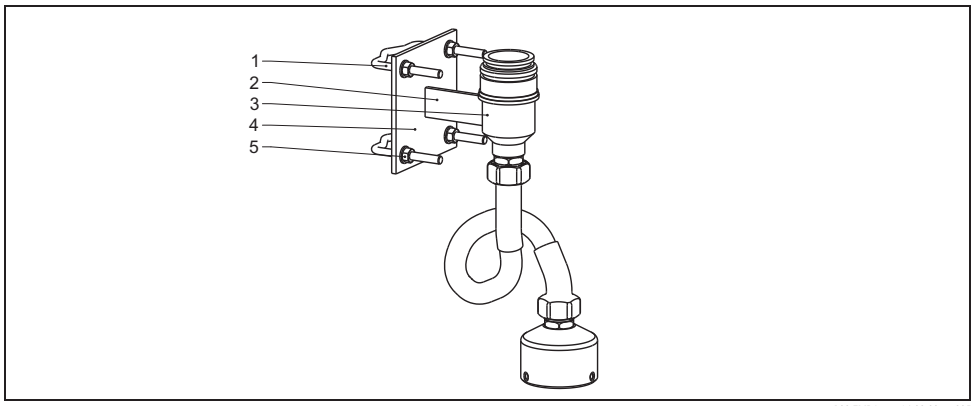

L00-FMP4xxxx-16-00-00-xx-005

Pos.	Part	Material
1	Bracket	304 (1.4301)
2	Bar	304 (1.4301)
3	Housing adapter	316L (1.4435)
4	Disc	304 (1.4301)
5	Screw nut	A4
	Washer	A2

Connecting parts

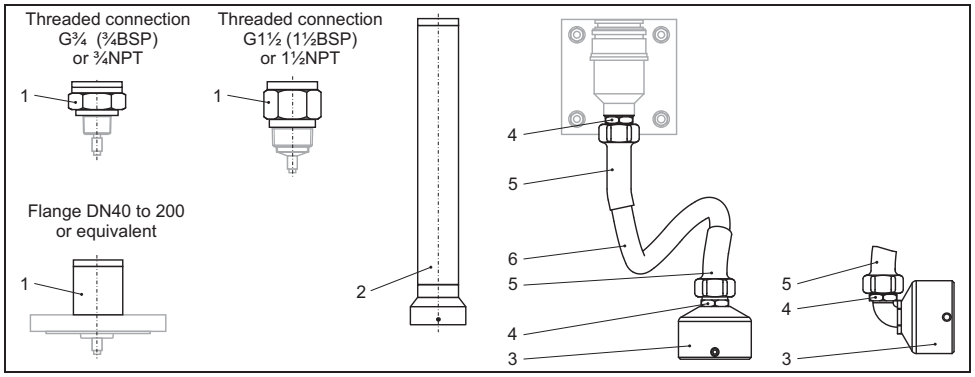

L00-FMP40xxx-16-00-00-xx-002

Pos.	Part	Material
1	Adapter	316L (1.4435)
2	Separator	316L (1.4435)
	Setscrew	A2
3	Adapter	316L (1.4404/1.4435)
	Setscrew	A2
4	Hose fitting	CuZn nickel-plated
5	Shrink hose	Polyolefin
6	Cable	PVC

Material
(in contact with process)

Standard variant

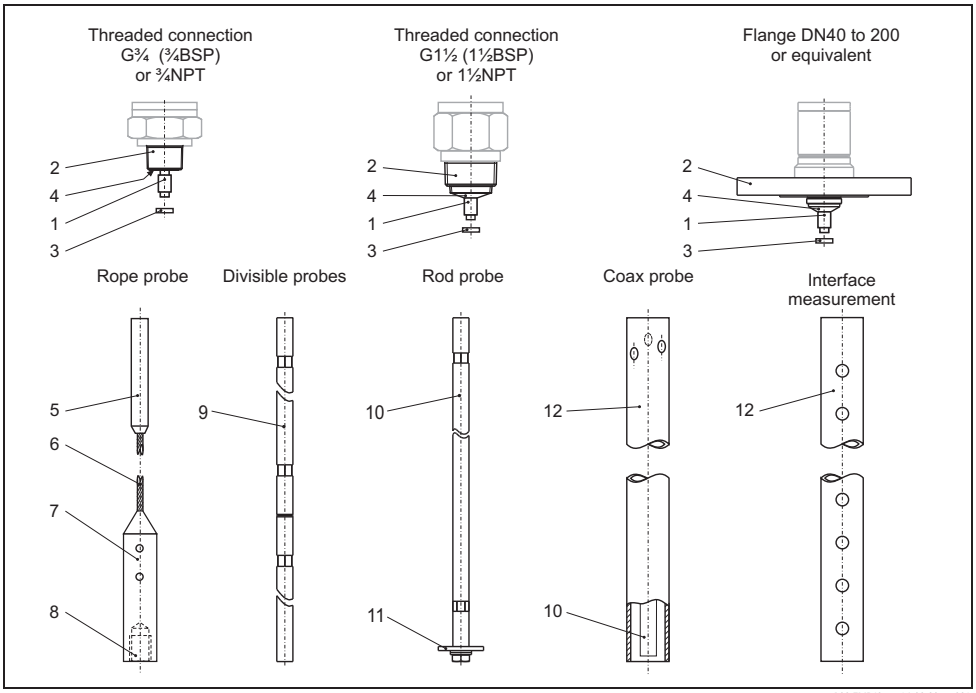

Pos.	Part	Material	
1	Counter nut	316L (1.4435)	
	Inner conductor	Rod/Rope: 318LN (1.4462)	Coax: 316L (1.4435)
2	Process connection	See Ordering information	
3	Nord-lock washer	1.4547	
4	Insulation sleeve	3/4": PPS-GF40	1-1/2": TFM1600
5	Press in sleeve	316L (1.4404/1.4435)	
6	Rope	316 (1.4401)	
7	Ballast weight	316L (1.4435)	
	Set screw	A4-70	
8	Screw	A2-70	
9	Rod	316L (1.4404/1.4435)	
	Connecting bolt	318LN (1.4462)	
	Nord-lock washer	1.4547	
10	Rod	3/4": 316L (1.4404)	1-1/2": 316L (1.4404/1.4435)
11	Centering of probe end	Disk: 316L (1.4404); Screw: A4; Nordlock: 1.4547	
12	Coax probe	316L (1.4435)	Interface measurement: 316L (1.4404)
	Spacer	PFA	

US EPA ARCHIVE DOCUMENT

Alloy variant

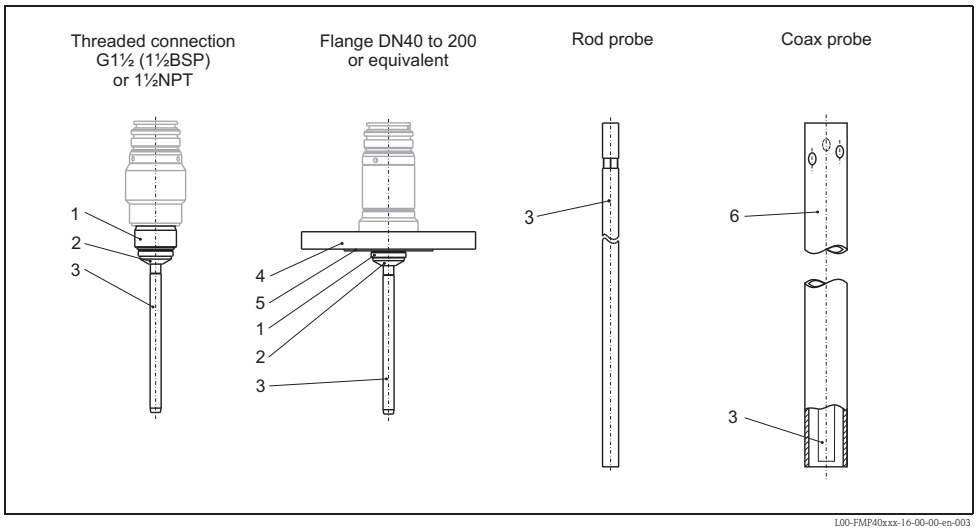

Pos.	Part	Material
1	Adapter	2.4602
2	Insulation sleeve	TFM1600
3	Rod probe	2.4602
4	Flange	316L (1.4404 / 1.4435)
5	Flange plating	2.4602
6	Coax probe	2.4602
	Spacer	PFA

DIN/EN flanges

Endress+Hauser supplies DIN/EN flanges made of stainless steel according to AISI 316L (DIN/EN material number 1.4404 or 1.4435). With regard to their temperature stability properties, the materials 1.4404 and 1.4435 are grouped under 13E0 in EN 1092-1 Tab. 18. The chemical composition of the two materials can be identical.

Process connection

See "Ordering information", → 📄 58.

Seal

See "Ordering information", → 📄 58.

Probe

See "Ordering information", → 📄 58.

US EPA ARCHIVE DOCUMENT

US EPA ARCHIVE DOCUMENT

Instruments International

Endress+Hauser
Instruments International AG
Kaegenstrasse 2
4153 Reinach
Switzerland

Tel. +41 61 715 81 00
Fax +41 61 715 25 00
www.endress.com
info@ii.endress.com

Endress+Hauser
People for Process Automation

TI00358F/00/EN/13.10
71120339
FM+SGML 6.0 ProMoDo

71120339

US EPA ARCHIVE DOCUMENT

Level | Pressure | Flow | Temperature | Liquid Analysis | Registration | Systems Components | Services | Solutions

Technical Information

Micropilot M FMR230/231/240/244/245

Level-Radar
Continuous and non-contact level measurement.
Cost-effective 4 to 20 mA 2-wire technology.
Suitable for hazardous locations.

Application

The Micropilot M is used for continuous, non-contact level measurement of liquids, pastes, slurries, and solids. The measurement is not affected by changing media, temperature changes, gas blankets or vapors.

- The FMR230 is especially suited for measurement in buffer and process tanks.
- The FMR231 has its strengths wherever high chemical compatibility is required.
- The FMR240 with the small 40 mm (1½") horn antenna is ideally suited for small vessels. Additionally, it provides an accuracy of ±3 mm (±0.12 in).
- The FMR244 combines the advantages of the horn antenna with high chemical resistance. The 80 mm (3") horn antenna is used additionally in solids.
- The FMR245 – highly resistant up to 200 °C (392 °F) and easy to clean.

Your benefits

- 2-wire technology, low price:
  A real alternative to differential pressure, floats and displacers. 2-wire technology reduces wiring costs and allows easy implementation into existing systems.
- Non-contact measurement:
  Measurement is almost independent from product properties.
- Easy on-site operation via menu-driven alphanumeric display.
- Easy commissioning, documentation and diagnostics via Endress+Hauser operating software.
- 2 frequency ranges – FMR230/FMR231 in the C-band and FMR240/244/245 ind the K-band: No compromises, the right frequency for every application.
- HART or PROFIBUS PA respectively FOUNDATION Fieldbus protocol.
- High temperatures: Suitable for process temperatures up to 200 °C (392 °F), up to 400 °C (752 °F) with high-temperature antenna.
- Rod antenna with inactive length:
  Reliable measurement in narrow nozzles, with condensation and build-up in the nozzle.
- Used for level monitoring (MIN, MAX) up to SIL 2 as per IEC 61508 / IEC 61511.
- Option: gas-tight feedthrough for FMR230/231/240/245 to improve the process safety.

TI00345F/00/EN/14.11
71139051

Endress+Hauser
People for Process Automation

Function and system design

Measuring principle

The Micropilot is a "downward-looking" measuring system, operating based on the time-of-flight method. It measures the distance from the reference point (process connection) to the product surface. Radar impulses are emitted by an antenna, reflected off the product surface and received again by the radar system.

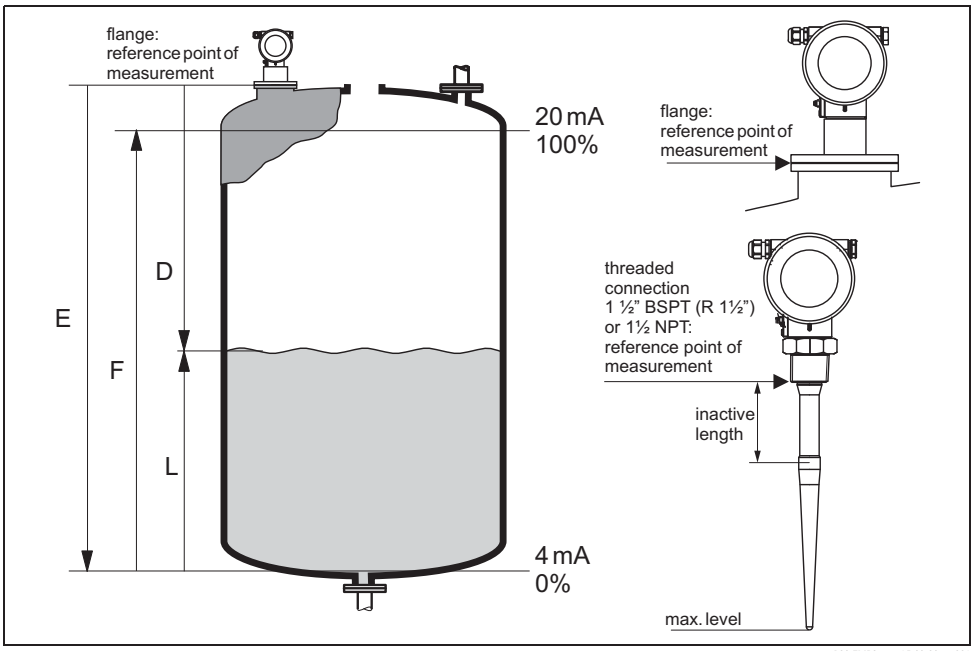

L00-FMR2xxxx-15-00-00-en-001

Input

The reflected radar impulses are received by the antenna and transmitted into the electronics. A microprocessor evaluates the signal and identifies the level echo caused by the reflection of the radar impulse at the product surface. The unambiguous signal identification is accomplished by the PulseMaster® eXact software, based on many years of experience with time-of-flight technology.
The distance "D" to the product surface is proportional to the time of flight "t" of the impulse:

$D = c \cdot t/2$,
with "c" being the speed of light.

Based on the known empty distance "E", the level "L" is calculated:

$L = E - D$

Refer to the above figure for the reference point for "E".

The Micropilot is equipped with functions to suppress interference echoes. The user can activate these functions. They ensure that interference echoes (i.e. from edges and weld seams) are not interpreted as level echo.

Output

The Micropilot is commissioned by entering an empty distance "E" (=zero), a full distance "F" (=span) and an application parameter. The application parameter automatically adapts the instrument to the process conditions. For models with a current output, the factory adjustment for zero point "E" and span "F" is 4 mA and 20 mA. For digital outputs and the display module, the factory adjustment for zero point "E" and span "F" is 0 % and 100 %.
A linearization with max. 32 points, based on a table entered either manually or semi-automatically, can be activated locally or remotely. This function provides a measurement in engineering units and a linear output signal for spheres, horizontal cylindrical tanks and vessels with conical outlet.

US EPA ARCHIVE DOCUMENT

Equipment architecture

Stand-alone

The Micropilot M can be used for measurement in a stilling well / bypass as well as in free space. The instrument provides a 4 to 20 mA output with HART protocol, or PROFIBUS PA respectively FOUNDATION Fieldbus communication.

4 to 20 mA output with HART protocol.

The complete measuring system consists of:

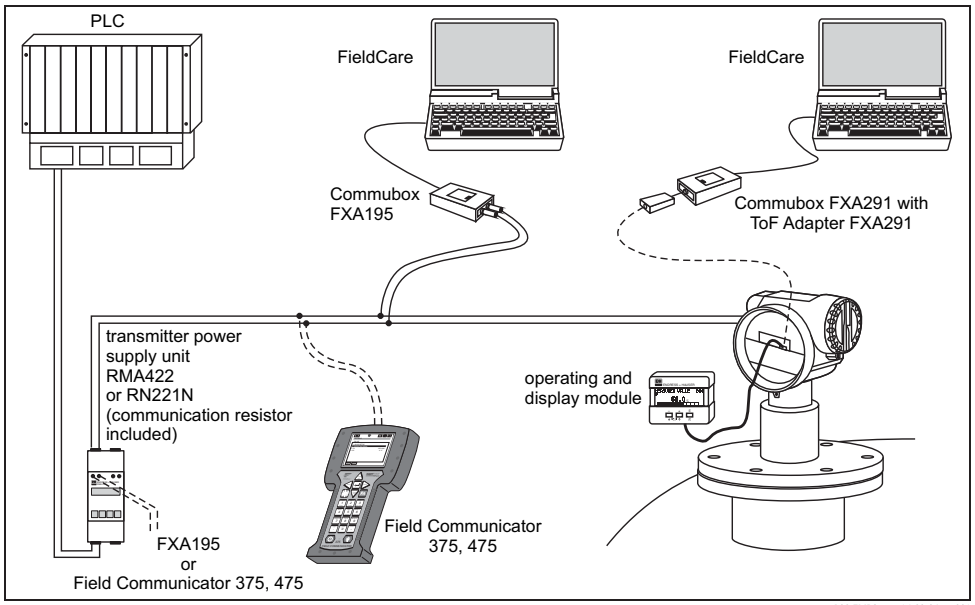

L00-FMR2xxxx-14-00-06-en-001

On-site operation

- with display and operating module,
- with a Personal Computer, FXA291 with ToF Adapter FXA291 (USB) and the operating software "FieldCare". FieldCare is a graphical operating software for instruments from Endress+Hauser (radar, ultrasonic, guided microimpulse). It assists with commissioning, securing data, signal analysis and documentation of the measuring point.

Remote operation

- with Field Communicator 375, 475,
- with a Personal Computer, Commubox FXA195 and the operating software "FieldCare".

US EPA ARCHIVE DOCUMENT

US EPA ARCHIVE DOCUMENT

System integration via PROFIBUS PA

A maximum of 32 transmitters (8 if mounted in an explosion hazardous location Ex ia IIC according to FISCO-model) can be connected to the bus. The segment coupler provides the operating voltage to the bus.
Both on-site as well as remote operation are possible.The complete measuring system consists of:

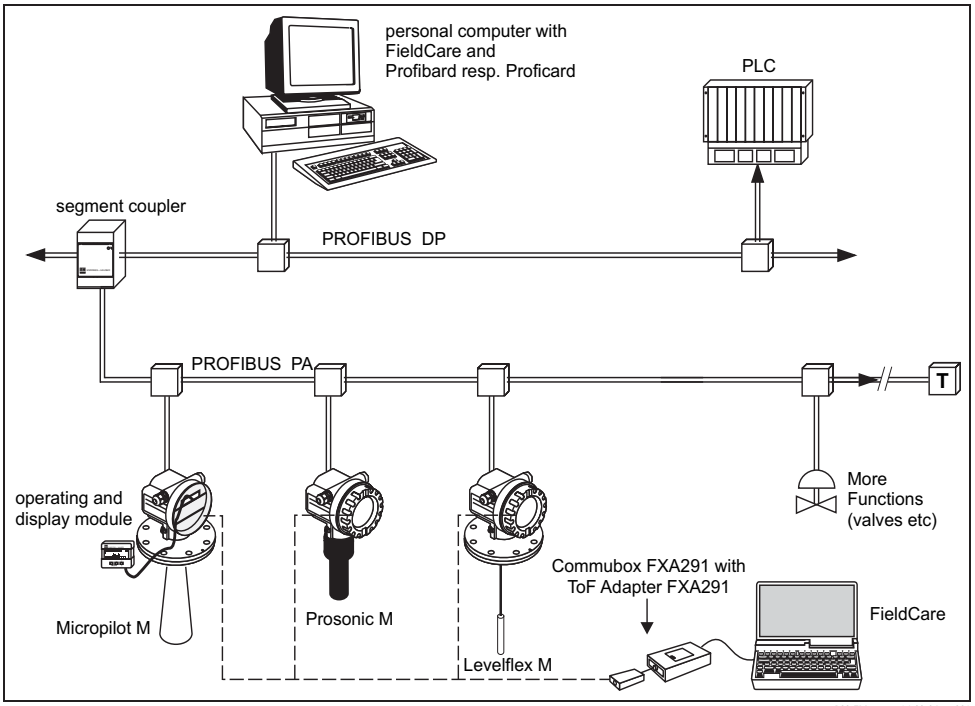

System integration via FOUNDATION Fieldbus

A maximum of 32 transmitters (standard, Ex em or Ex d) can be connected to the bus.
For protection class Ex ia IIC: the max. number of transmitters depends on the established rules and standards for intrinsically safe circuits (EN 60079-14, proof of intrinsically safety). Both on-site as well as remote operation are possible. The complete measuring system consists of:

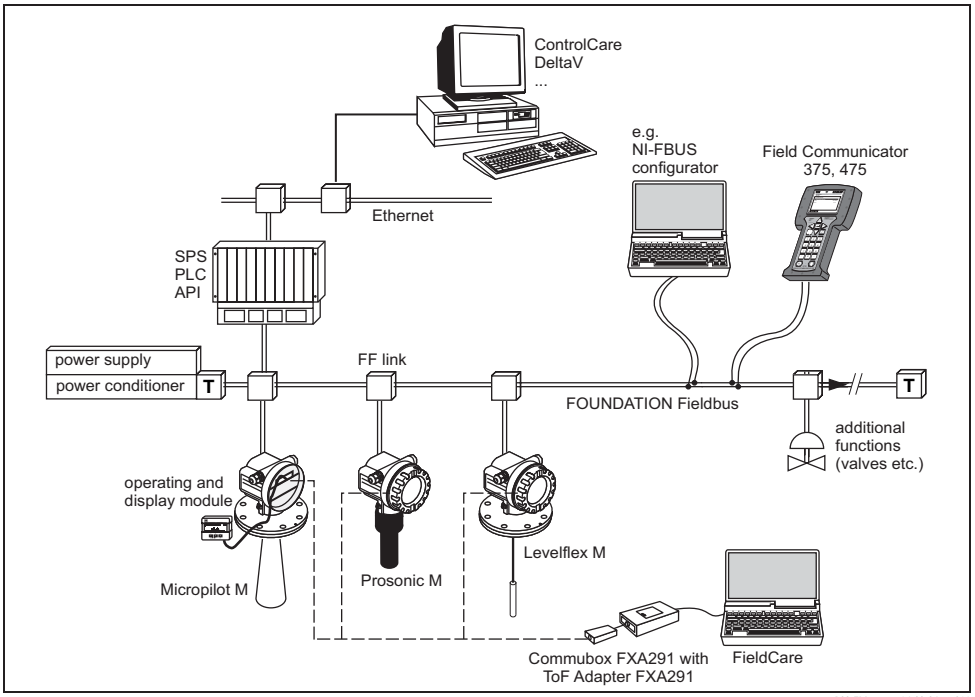

Integrated in tank gauging system

The Endress+Hauser Tank Side Monitor NRF590 provides integrated communications for sites with multiple tanks, each with one or more sensors on the tank, such as radar, spot or average temperature, capacitive probe for water detection and/or pressure sensors. Multiple protocols out of the Tank Side Monitor guarantee connectivity to nearly any of the existing industry standard tank gauging protocols. Optional connectivity of analog 4 to 20 mA sensors, digital I/O and analog output simplify full tank sensor integration. Use of the proven concept of the intrinsically safe HART bus for all on-tank sensors yields extremely low wiring costs, while at the same time providing maximum safety, reliability and data availability.

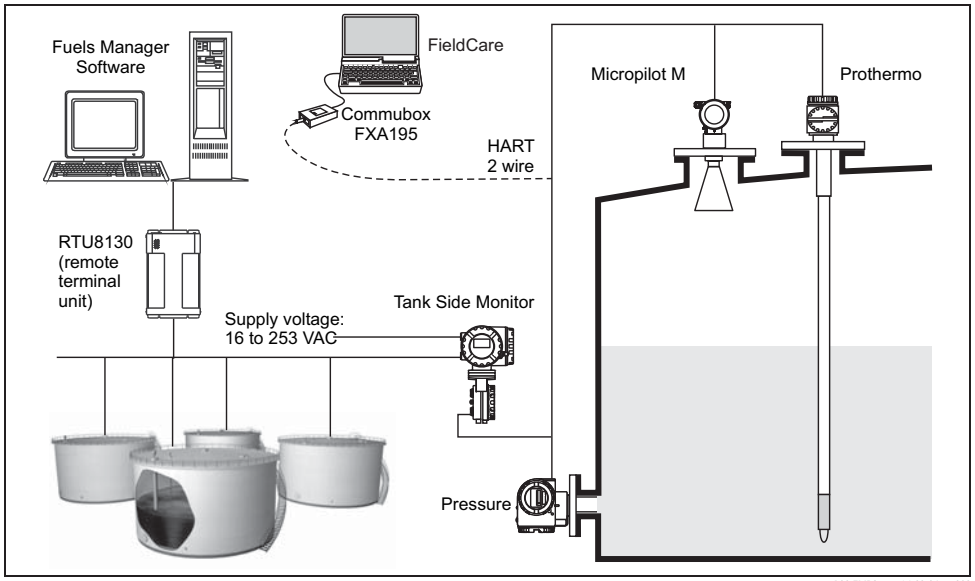

L00-FMR2xxxx-14-00-06-en-030

US EPA ARCHIVE DOCUMENT

US EPA ARCHIVE DOCUMENT

System integration via Fieldgate

Vendor Managed Inventory

By using Fieldgates to interrogate tank or silo levels remotely, suppliers of raw materials can provide their regular customers with information about the current supplies at any time and, for example, account for them in their own production planning. For their part, the Fieldgates monitor the configured level limits and, if required, automatically activate the next supply. The spectrum of options here ranges from a simple purchasing requisition via e-mail through to fully automatic order administration by coupling XML data into the planning systems on both sides.

Remote maintenance of measuring equipment

Fieldgates not only transfer the current measured values, they also alert the responsible standby personnel, if required, via e-mail or SMS. In the event of an alarm or also when performing routine checks, service technicians can diagnose and configure connected HART devices remotely. All that is required for this is the corresponding HART operating software (e.g. FieldCare) for the connected device. Fieldgate passes on the information transparently, so that all options for the respective operating software are available remotely. Some on-site service operations can be avoided by using remote diagnosis and remote configuration and all others can at least be better planned and prepared.

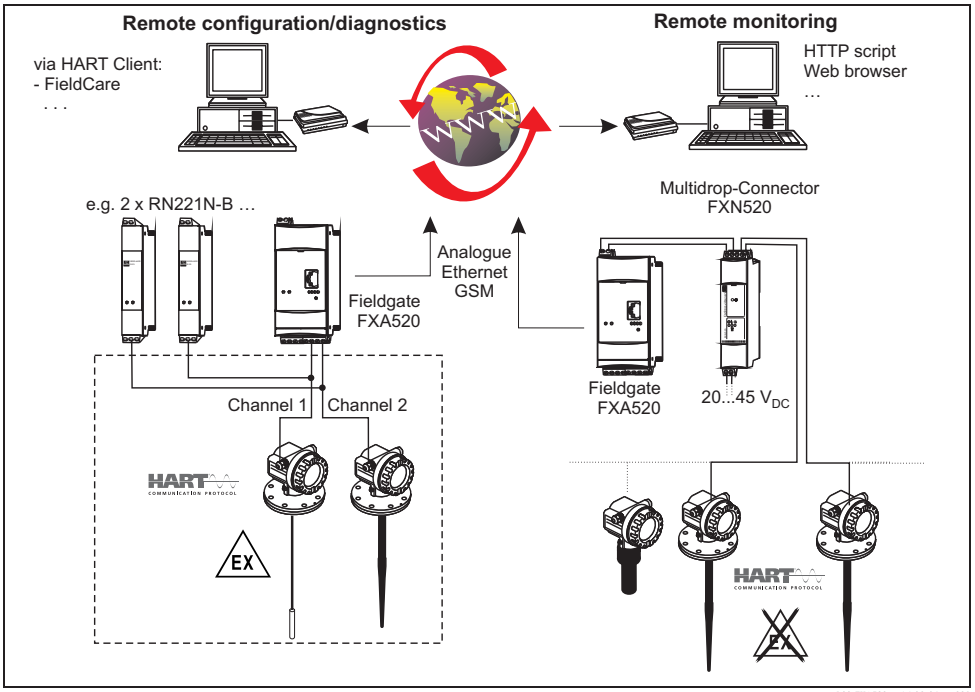

L00-FXA520xx-14-00-06-en-009

Note!
The number of instruments which can be connected in mutidrop mode can be calculated by the "FieldNetCalc" program. A description of this program can be found in Technical Information TI00400F/00/EN (Multidrop Conncector FXN520). The program is available form your Endress+Hauser sales organisation or in the internet at: www.endress.com → Select your country → Download → Search: Fieldnetcalc.

Input

Measured variable

The measured variable is the distance between a reference point (→ 📄 4) and a reflective surface (i.e. medium surface). The level is calculated based on the tank height entered.The level can be converted into other units (volume, mass) by means of a linearization (32 points).

Measuring range in liquids

The usable measuring range depends on the size of the antenna, the reflectivity of the medium, the mounting location and eventual interference reflections.

The maximum configurable range is:
- 20 m (66 ft) for Micropilot M FMR23x,
- 40 m (131 ft) for Micropilot M FMR24x (basic version),
- 70 m (230 ft) for Micropilot M FMR24x (with additional option F (G), see "ordering information")

The following tables describe the groups of media as well as the achievable measuring range as a function of application and media group. If the dielectric constant of a medium is unknown, it is recommended to assume media group B to ensure a reliable measurement.

Media group	DC (Εr)	Examples
A	1.4 to 1.9	non-conducting liquids, e.g. liquefied gas[1)]
B	1.9 to 4	non-conducting liquids, e.g. benzene, oil, toluene, …
C	4 to 10	e.g. concentrated acids, organic solvents, esters, aniline, alcohol, acetone, …
D	> 10	conducting liquids, e.g. aqueous solutions, dilute acids and alkalis

1) Treat Ammonia NH_3 as a medium of group A, i.e. use FMR230 in a stilling well.

Measuring range in solids

The FMR244 with 80 mm (3") antenna or FMR240 with 100 mm (4") horn antenna and additional option "F" (= advanced dynamics) is also suited for solid applications. The usable measuring range depends on the reflection properties of the medium, the mounting position and interference reflections which may be present. The maximum configurable measuring range for the FMR240 with 100 mm (4") horn antenna and additional option "F" (= advanced dynamics) is 30 m (98 ft) in solid applications. It is recommended to use the variable flange seal for alignment (→ 📄 78).

Reduction of the max. possible measuring range through:
- Media with poor reflection properties (= small DC). For examples refer to table below.
- Angle of repose.
- Extremely loose surfaces of bulk solids, e.g. bulk solids with low bulk weight for pneumatic filling.
- Build-up, above all of moist products.

The following table describes the media groups and the dielectric constant Εr.

Media group	DC (Εr)	Examples	Signal attenuation
A	1.6 to 1.9	– Plastic granulate – White lime, special cement – Sugar	19 to 16 dB
B	1.9 to 2.5	– Portland cement, plaster	16 to 13 dB
C	2.5 to 4	– Grain, seeds – Ground stones – Sand	13 to 10 dB
D	4 to 7	– Naturally moist (ground) stones, ores – Salt	10 to 7 dB
E	> 7	– Metallic powder – Carbon black – Coal	< 7 dB

The respective lower group applies for very loose or loosened bulk solids.

US EPA ARCHIVE DOCUMENT

Measuring range depending on vessel type, conditions and product for FMR230, FMR231

	Storage tank [1]		Buffer tank [1]		Process tank with agitator [1]		Stilling well	Bypass
	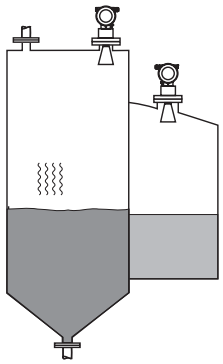 Calm product surface (e.g. intermittent filling, filling from bottom, immersion tubes).		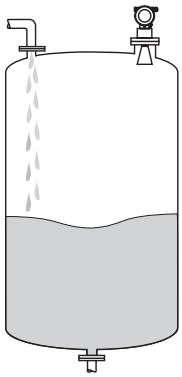 Moving surfaces (e.g. continuous filling, from above, mixing jets).		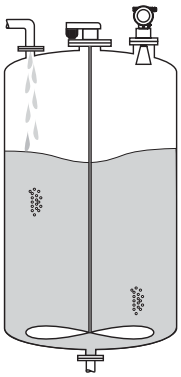 Turbulent surface. Single stage agitator < 60 U/min.		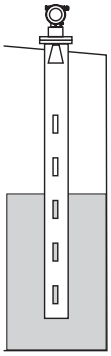	
FMR230:	150 mm (6")	200 mm (8"), 250 mm (10")	150 mm (6")	200 mm (8"), 250 mm (10")	150 mm (6")	200 mm (8"), 250 mm (10")	80 to 250 mm (3 to 10")	80 to 250 mm (3 to 10") [2]
FMR231:	Rod antenna	—	Rod antenna	—	Rod antenna	—	—	—
	B: 10 (32) C: 15 (49) D: 20 (65)	B: 15 (49) C: 20 (65) D: 20 (65)	B: 5 (16) C: 7.5 (25) D: 10 (32)	B: 7.5 (25) C: 10 (32) D: 12.5 (41)	B: 4 (13) C: 6 (20) D: 8 (26)	B: 6 (20) C: 8 (26) D: 10 (32)	A, B, C, D: 20 (65)	C, D: 20 (65)
	Measuring range [m (ft)]							

1) For media group A to use a stilling well (20 m (66 ft).

2) For media group A and B possible, i.e. with stilling well in bypass.

US EPA ARCHIVE DOCUMENT

Measuring range depending on vessel type, conditions and product for FMR240, FMR244, FMR245

Standard: max. measuring range = 40 m (131 ft)	With additional option "F" ("G"): max. measuring range = 70 m (230 ft)
* Max. recommended measuring range = 20 m (66 ft) for FMR244 with 80 mm (3") antenna, in solids 15 m (49 ft).[1) 2)] The recommended measuring range for FMR240 with 100 mm (4") horn antenna in solids is 30 m (98 ft).	

1) Larger measuring range in solids available on request.

2) In solids with additional option "F" (= advanced dynamic), and variable flange seal (→ 78).

	Storage tank				Buffer tank			
	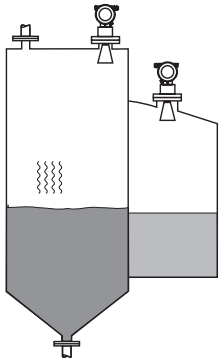 Calm product surface (e.g. intermittent filling, filling from bottom, immersion tubes).				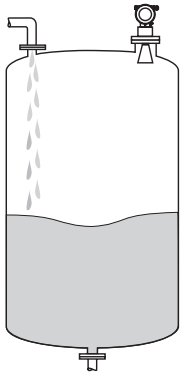 Moving surfaces (e.g. continuous filling, from above, mixing jets).			
FMR240	40 mm (1½")	50 mm (2")	80 mm (3")	100 mm (4")	40 mm (1½")	50 mm (2")	80 mm (3")	100 mm (4")
FMR244	40 mm (1½")	–	* 80 mm (3")	–	40 mm (1½")	–	* 80 mm (3")	–
FMR245	–	50 mm (2")	80 mm (3")	–	–	50 mm (2")	80 mm (3")	–
	A: 3 (9.9) / 5 (16) B: 5 (16) / 8 (26) C: 10 (32) / 15 (49) D: 15 (49) / 25 (82)	A: 4 (13) / 8 (26) B: 8 (26) / 12 (39) C: 15 (49) / 25 (82) D: 35 (110) / 40 (131)	A: 8 (26) / 10 (32) B: 15 (49) / 20 (65) C: * / 30 (98) / 40 (131) D: * / 40 (131) / 60 (197)	A: 10 (32) / 15 (49) B: 25 (82) / 30 (99) C: 40 (131) / 45 (148) D: 40 (131) / 70 (229)	B: 2 (6.6) C: 4 (13) / 5 (16) D: 7.5 (24) / 10 (32)	B: 3 (9.9) / 5 (16) C: 7.5 (24) / 10 (32) D: 10 (32) / 15 (49)	A: 2.5 (8) / 5 (16) B: 5 (16) / 10 (32) C: 10 (32) / 15 (49) D: 15 (49) / * / 25 (82)	A: 5 (16) / 7.5 (24) B: 10 (32) / 15 (49) C: 15 (49) / 25 (82) D: 25 (82) / 35 (110)
	Measuring range [m (ft)]							

US EPA ARCHIVE DOCUMENT

	Process tank with agitator				Stilling well[1]	Bypass[2]
	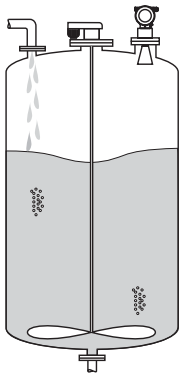 Turbulent surface. Single stage agitator < 60 RPM.				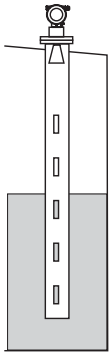	
FMR240	40 mm (1½")	50 mm (2")	80 mm (3")	100 mm (4")	40 to 100 mm (1½" to 4")	40 to 100 mm (1½" to 4")
FMR244	40 mm (1½")	–	80 mm (3")	–	40 to 100 mm (1½" to 4"	–
FMR245	–	50 mm (2")	80 mm (3")	–	50 to 80 mm (2" to 3")	50 to 80 mm (2" to 3")
	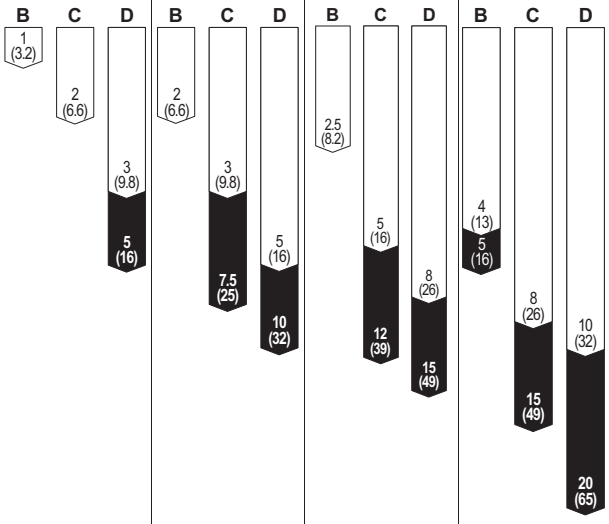				A, B, C, D 20 (65)	C, D 20 (65)
	Measuring range [m (ft)]					

1) Larger measuring range on request.
2) For media group A and B to use a Levelflex M with coax probe.

US EPA ARCHIVE DOCUMENT

Measuring conditions in liquids

Note!

- In case of **boiling surfaces, bubbling** or tendency for **foaming,** use FMR230 or FMR231. Depending on its consistence, foam can either absorb microwaves or reflect them off the foam surface. Measurement is possible under certain conditions. For FMR240/244/245, the additional option "F" ("G") recommended (→ 62).
- In case of heavy **steam development** or **condensate** the max. measuring range of FMR240 may decrease depending on density, temperature and composition of the steam → use FMR230 or FMR231.
- For the measurement of absorbing gases such as **ammonia NH_3** or some **fluorocarbons** [1], please use FMR230 in a stilling well.

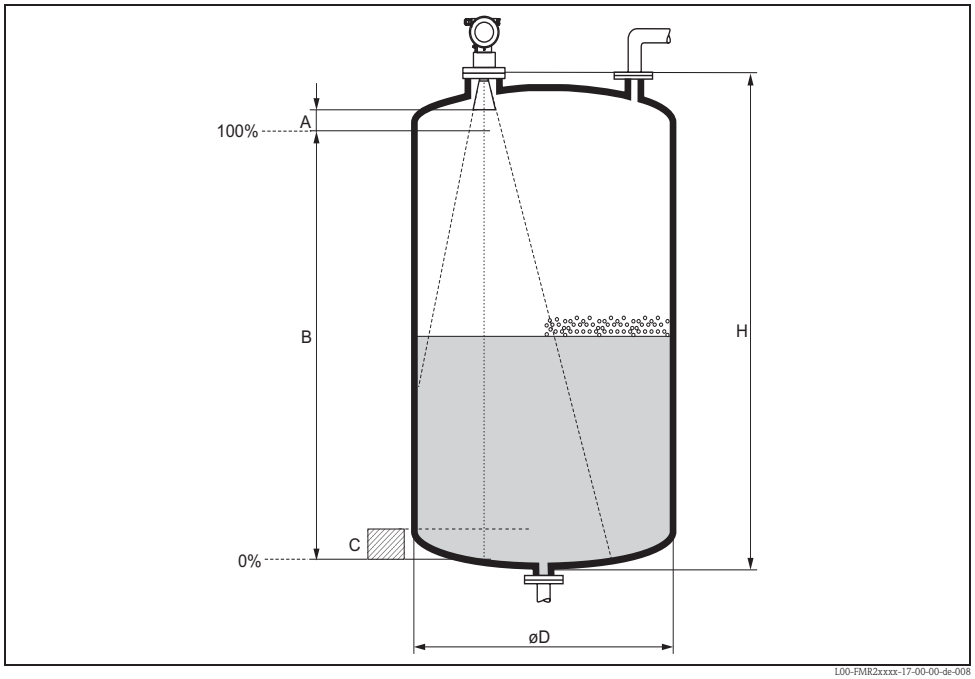

L00-FMR2xxxx-17-00-00-de-008

- The measuring range begins, where the beam hits the tank bottom. Particularly with dish bottoms or conical outlets the level cannot be detected below this point.
- In case of media with a low dielectric constant (groups A and B), the tank bottom can be visible through the medium at low levels (low height **C**). Reduced accuracy has to be expected in this range. If this is not acceptable, we recommend positioning the zero point at a distance **C** (see Fig.) above the tank bottom in these applications.
- In principle it is possible to measure up to the tip of the antenna with FMR230/231/240. However, due to considerations regarding corrosion and build-up, the end of the measuring range should not be chosen any closer than **A** (see Fig.) to the tip of the antenna.
  For FMR244/245, the end of measuring range should not be chosen closer than **A** (see Fig.) to the tip of the antenna, especially if there is development of condensate.
- The smallest possible measuring range **B** depends on the antenna version (see Fig.).
- The tank diameter should be greater than **D** (see Fig.), the tank height at least **H** (see Fig.).

	A [mm (in)]	B [m (ft)]	C [mm (in)]	D [m (ft)]	H [m (ft)]
FMR230/231	50 (1.97)	> 0,5 (> 1.6)	150 to 300 (5.91 to 11.8)	> 1 (> 3.3)	> 1,5 (> 4.9)
FMR240	50 (1.97)	> 0,2 (> 0.7)	50 to 250 (1.97 to 9.84)	> 0,2 (> 0.7)	> 0,3 (> 1)
FMR244	150 (5.91)	> 0,2 (> 0.7)	50 to 250 (1.97 to 9.84)	> 0,2 (> 0.7)	> 0,3 (> 1)
FMR245	200 (7.87)	> 0,2 (> 0.7)	50 to 250 (1.97 to 9.84)	> 0,2 (> 0.7)	> 0,3 (> 1)

1) Affected compounds are e.g. R134a, R227, Dymel 152a.

US EPA ARCHIVE DOCUMENT

Measuring conditions in solids

- The measuring range begins, where the beam hits the bottom. Particularly with conical outlets the level cannot be detected below this point. The maximum measuring range can be increased in such applications by using a top target positioner (→ 77).
- In case of media with a low dielectric constant (groups A and B), the bottom can be visible through the medium at low levels. In order to guarantee the required accuracy in these cases, it is recommended to position the zero-point at a distance **C** above the bottom (see Fig.).
- In principle it is possible to measure up to the tip of the antenna with the Micropilot M. However, due to considerations regarding abrasion and build-up and depending on the orientation of the product surface (angel of repose), the end of the measuring range should be at a distance of **A** (see Fig.). If required, and if some conditions (high DC value, flat angle of repose) are met, shorter distances can be achieved.

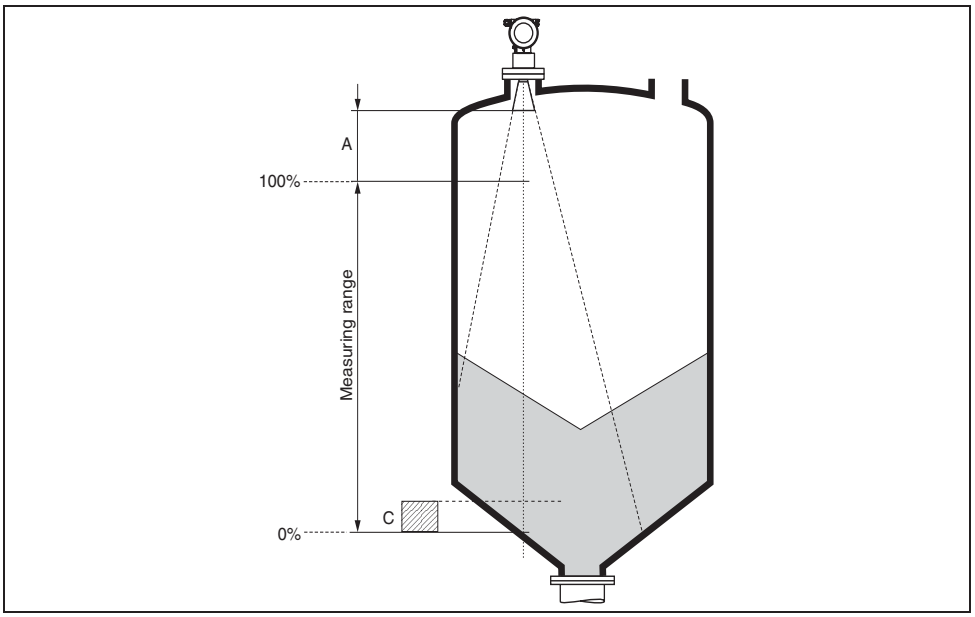

A [mm (in)]	C [mm (in)]
approx. 400 (15.7)	50 to 150 (1.97 to 5.91)

Operating frequency

- FMR230/231: C-band
- FMR240/244/245: K-band

Up to 8 Micropilot M transmitters can be installed in the same tank because the transmitter pulses are statistically coded.

Transmitting power

Distance	Average energy density in beam direction	
	max. measuring range = 20 m (66 ft) / 40 m (131 ft)	measuring range = 70 m (230 ft)
1 m (3.3 ft)	< 12 nW/cm^2	< 64 nW/cm^2
5 m (16 ft)	< 0.4 nW/cm^2	< 2.5 nW/cm^2

US EPA ARCHIVE DOCUMENT

Output

Output signal

HART

Signal coding	FSK ±0.5 mA over currency signal
Data transmission rate	1200 Baud
Galvanic isolation	Yes (IO-Module)

PROFIBUS PA

Signal coding	Manchester Bus Powered (MBP)
Data transmission rate	31.25 KBit/s, voltage mode
Galvanic isolation	Yes (IO-Module)

FOUNDATION Fieldbus

Signal coding	Manchester Bus Powered (MBP)
Data transmission rate	31.25 KBit/s, voltage mode
Galvanic isolation	Yes (IO-Module)

Signal on alarm

Error information can be accessed via the following interfaces:
- Local display:
  - Error symbol
  - Plain text display
- Current output, signal on error can be selected (e.g. according to NAMUR recommendation NE43).
- Digital interface

Linearization

The linearization function of the Micropilot M allows the conversion of the measured value into any unit of length or volume. Linearization tables for calculating the volume in cylindrical tanks are pre-programmed. Other tables of up to 32 value pairs can be entered manually or semi-automatically.

US EPA ARCHIVE DOCUMENT

Protocol specific data

HART

Manufacturer ID	000011 hex	
Device Type Code	000F hex (for FMR230/231)	001E hex (for FMR240/244/245)
Transmitter specific revision	04 hex (for FMR230/231)	05 hex (for FMR240/244/245)
HART specification	5.0	
DD-Files	Information and files can be found: ■ www.endress.com ■ www.hartcomm.org	
Load HART	Min. 250 Ω	
Device variables	Primary value: level or volume [1)]	
Features supported	■ Burst mode ■ Additional Transmitter Status	

1) according to configuration

PROFIBUS PA

Manufacturer ID	000011 hex
Ident number	1522 hex
Profile Version	3.0
GSD file	Information and files can be found: ■ www.endress.com ■ www.hartcom.com
GSD file version	
Output values	Primary value: measured value Secondary value: distance
Input values	Display value of PLC
Features supported	■ I&M ■ Identification & Maitenance (for FMR240/244/245 of software version 01.05.00)

US EPA ARCHIVE DOCUMENT

FOUNDATION Fieldbus

	FMR230/231	FMR240/244/245
Manufacturer ID	452B48	
Device Type	100F hex	100F hex
Device Revision	04 hex	05 hex
DD Revision	Information and files can be found: ■ www.endress.com ■ www.feldbus.org	
CFF Revision		
Devise Tester Version (ITK Version)	4.61	5.00
ITK Test Campaign Number	IT035500	IT042000
Link Master (LAS) Capable	yes	
Link Master / Basic Device Selectable	yes, default: Basic Device	
Node Address	Default: 247	
Features supported	Following methods are supported: ■ Basic setup ■ Safety settings ■ Acknowledge alarm ■ Linearisation ■ Extended calibration ■ Output ■ System parameters ■ Lock TB Manufacturer parameters	

Virtual Communication Relationship (VCRs)	
Number of VCRs	24
Number of Link Objects in VFD	24
Permanent entries	1
Client VCRs	0
Server VCRs	24
Source VCRs	23
Sink VCRs	0
Subscriber VCRs	23
Publisher VCRs	23

Devise Link Capabilities	
Slot time	4
Min. inter PDU delay	4
Max. response delay	10

US EPA ARCHIVE DOCUMENT

Transducer Blocks		
Block	**Content**	**Output values**
Sensor Block	contains all parameters related to the mesurement	■ level or volume[1)] (channel 1) ■ distance (channel 2)
Diagnsotic Block	contains diagnostic information	no output values
Display Block	contains parameters to configure the local display	no output values

1) depending on the configuration of the sensor-block

Function Blocks				
Block	**Content**	**Number of blocks**	**Execution time**	**Functionality**
Resource Block	The Resource Block contains all the data that uniquely identifies the field device. It is an electronic version of a nameplate of the device.	1	—	enhanced
Analog Input 1	The AI block takes the manufacturer's input data, selected by channel number, and makes it available to other function blocks at its output.	2	30 ms	standard
Analog Input 2			30 ms	
PID Block	The PID block serves as proportional-integral-derivative controller and is used almost universally to do closed-loop-control in the field including cascade and feedforward.	1	80 ms	standard
Arithmetic Function Block	This block is designed to permit simple use of popular measurement math functions. The user does not have to know how to write equations. The math algorithm is selected by name, chosen by the user for the function to be done.	1	50 ms	standard
Input Selector Block	The input selector block provides selection of up to four inputs and generates an output based on the configured action. This block normally receives its inputs from AI blocks. The block performs maximum, minimum, middle, average and 'first good' signal selection.	1	30 ms	standard
Signal Characterizer Block	The signal characterizer block has two sections, each with an output that is a non-linear function of the respective input. The non-linear function is determined by a single look-up table with 21 arbitrary x-y pairs.	1	40 ms	standard
Integrator Block	The Integrator Function Block integrates a variable as a function of the time or accumulates the counts from a Pulse Input block. The block may be used as a totalizer that counts up until reset or as a batch totalizer that has a setpoint, where the integrated or accumulated value is compared to pre-trip and trip settings, generating discrete signals when these settings are reached.	1	60 ms	standard

Additional Function Block Information	
Instantiable Function Blocks	No
Number of instanciable blocks	—

US EPA ARCHIVE DOCUMENT

Mechanical construction

Design, dimensions

Housing dimensions

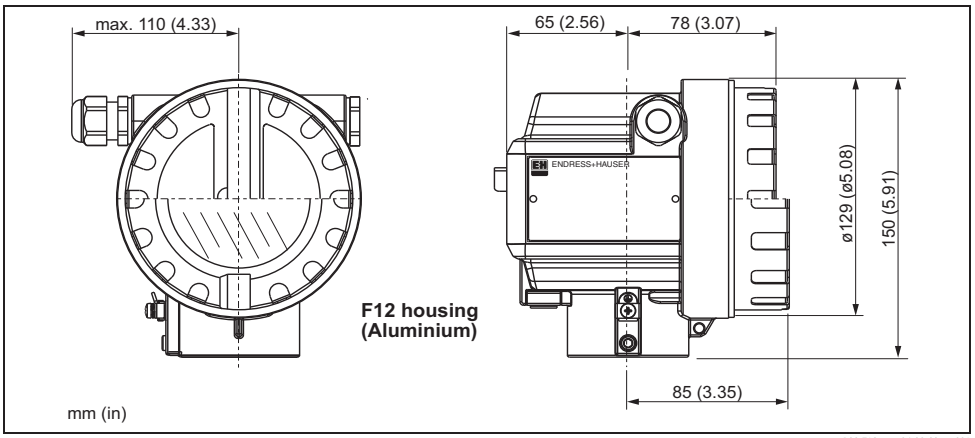

L00-F12xxxx-06-00-00-en-001

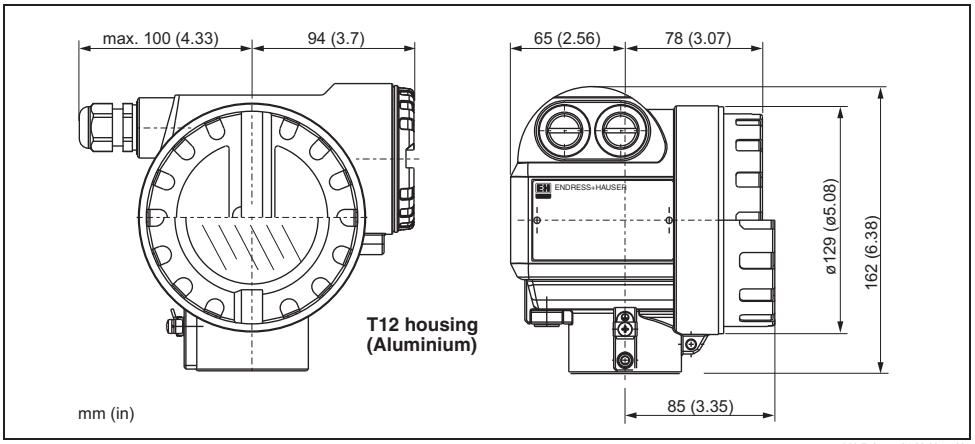

L00-T12xxxx-06-00-00-en-001

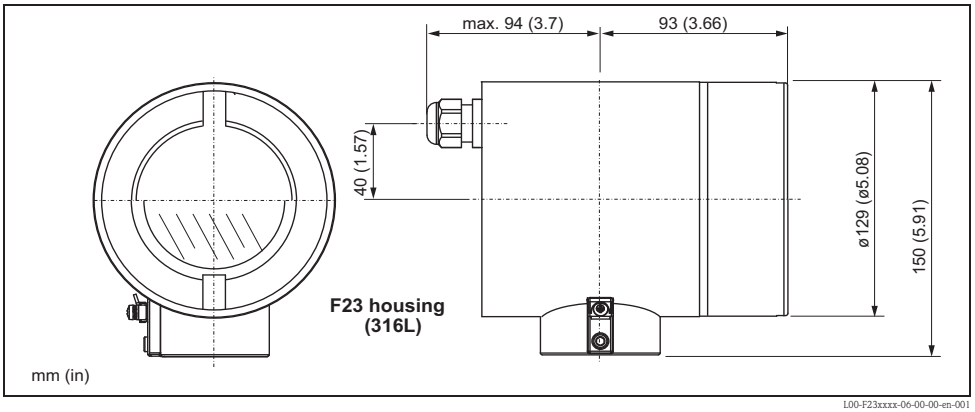

L00-F23xxxx-06-00-00-en-001

US EPA ARCHIVE DOCUMENT

Micropilot M FMR230 - Process connection and antenna

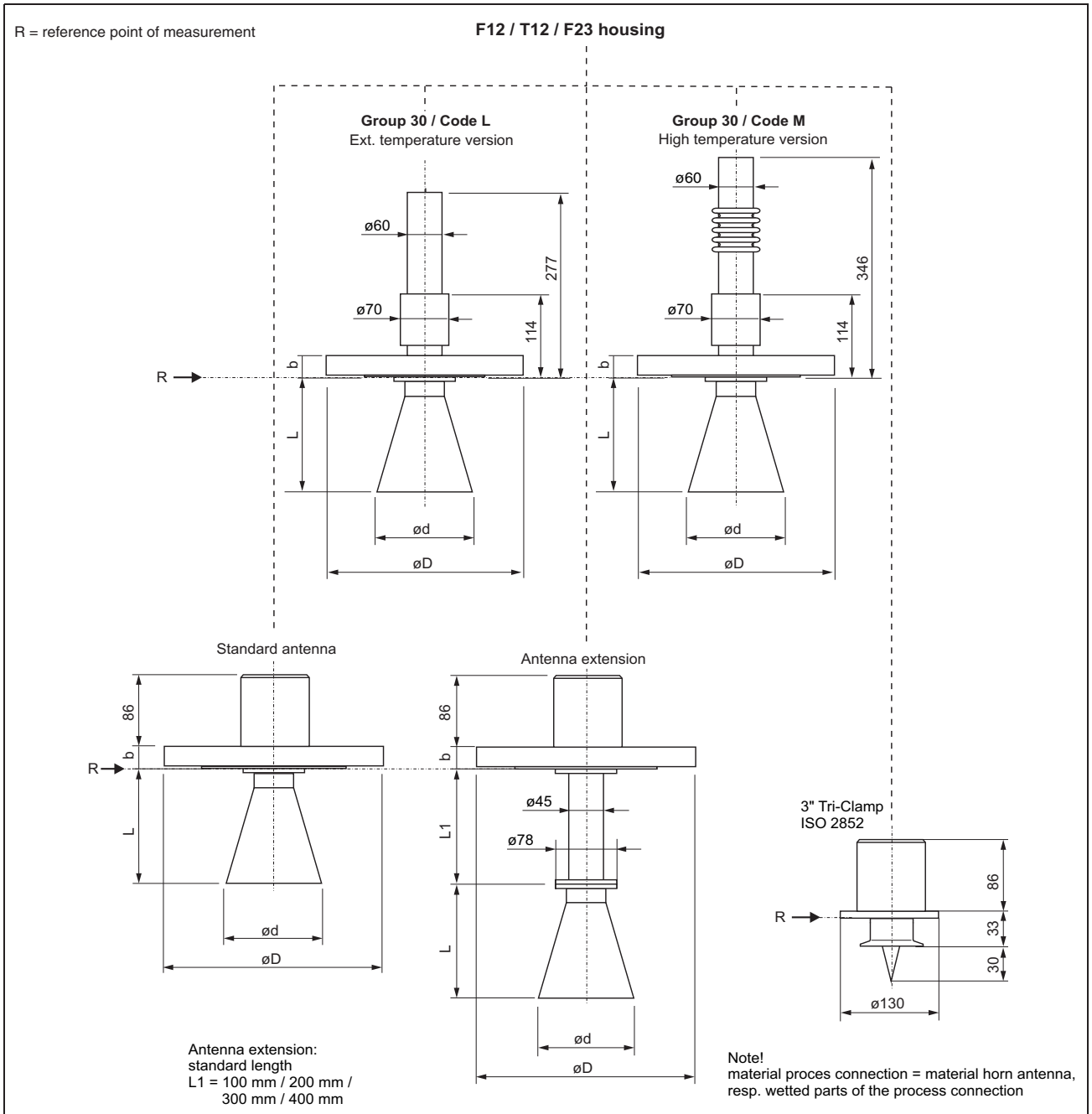

Horn antenna

Antenna size		80mm/3”	100mm/4”	150mm/6”	200mm/8”	250mm/10”
L [mm]	316L	68	105	185	268	360
	Alloy4C	74	119	204	289	379
d [mm]		75	95	145	190	240

Flange to ANSI B16.5

Flange	3”	4”	6”	8”	10”
b [mm]	23.9 (28.4)	23.9 (31.8)	25.4	28.4	30.2
D [mm]	190.5 (209.5)	228.6 (254)	279.4	342.9	406.4

for 150 lbs (for 300 lbs)

Flange to EN 1092-1 (agreeable to DIN 2527)

Flange	DN 80	DN 100	DN 150	DN 200	DN 250
b [mm]	20 (24)	20 (24)	22	24	26
D [mm]	200 (200)	220 (235)	285	340	405

for PN 16 (for PN 40)

Flange to JIS B2220

Flange	DN 80	DN 100	DN 150	DN 200	DN 250
b [mm]	18	18	22	22	24
D [mm]	185	210	280	330	400

for 10K

L00-FMR230xx-06-00-00-en-005

US EPA ARCHIVE DOCUMENT

Micropilot M FMR231 - Process connection and antenna

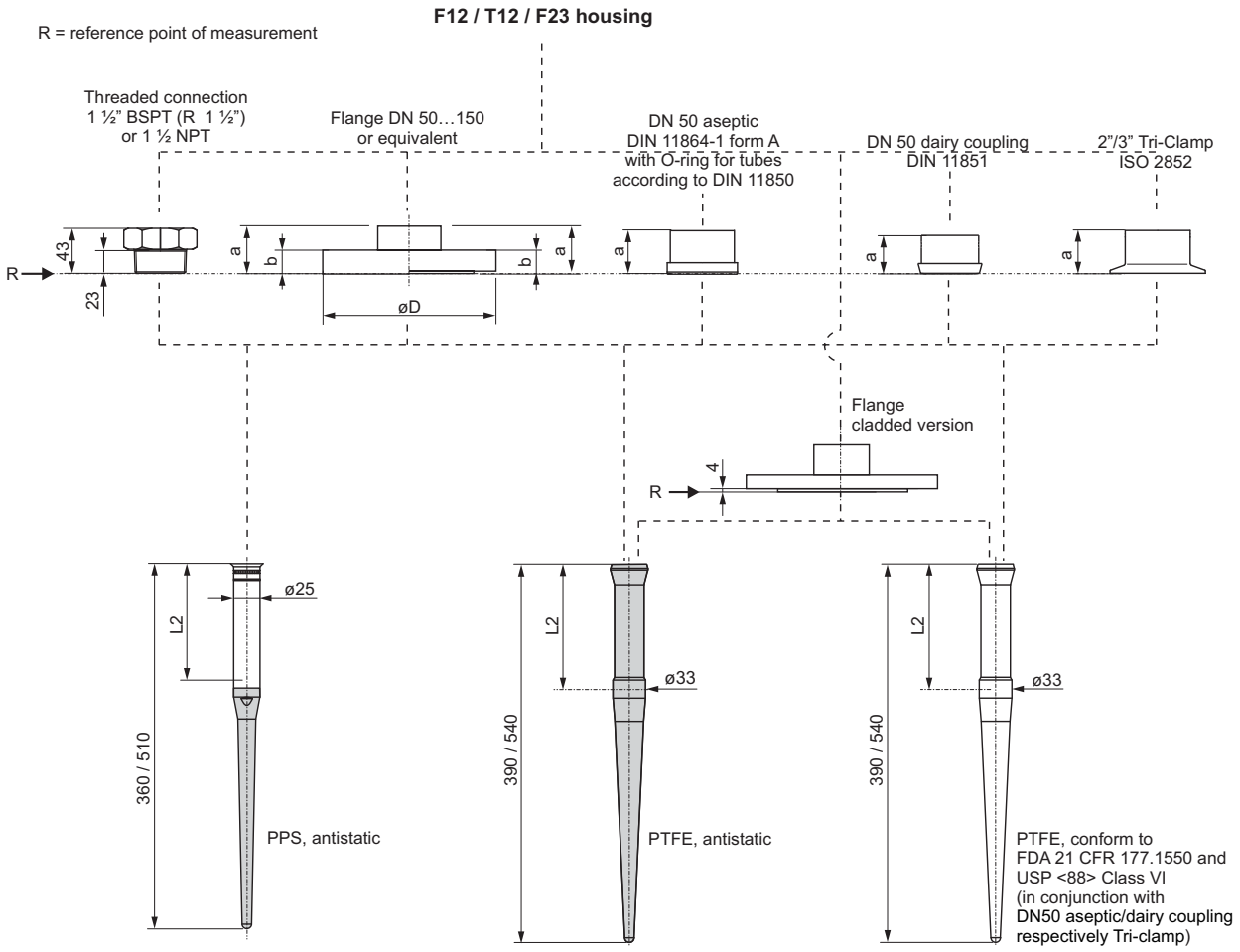

Inactive length, equivalent
to max. nozzle height
L2 = 100 mm / 250 mm

Flange to EN 1092-1 (agreeable to DIN 2527)

Flange	DN 50	DN 80	DN 100	DN 150
b [mm]	20	20 (24)	20	22
D [mm]	165	200 (200)	220	285

for PN 16 (for PN 40)

Flange to ANSI B16.5

Flange	2"	3"	4"	6"
b [mm]	19.1	23.9 (28.4)	23.9 (31.8)	25.4
D [mm]	152.4	190.5 (209.5)	228.6 (254)	279.4

for 150 lbs (for 300 lbs)

Flange to JIS B2220

Flange	DN 50	DN 80	DN 100	DN 150
b [mm]	16	18	18	22
D [mm]	155	185	210	280

for 10K

Process connection	Flange DN 50…150	DN 50 aseptic coupling	DN 50 diary coupling	2"/3" Tri-Clamp
a [mm] without gastight feedthrough	41	44.5	41	41
a [mm] with gastight feedthrough	77	80.5	77	77

L00-FMR231xx-06-00-00-en-005

US EPA ARCHIVE DOCUMENT

Micropilot M FMR240 - Process connection and antenna

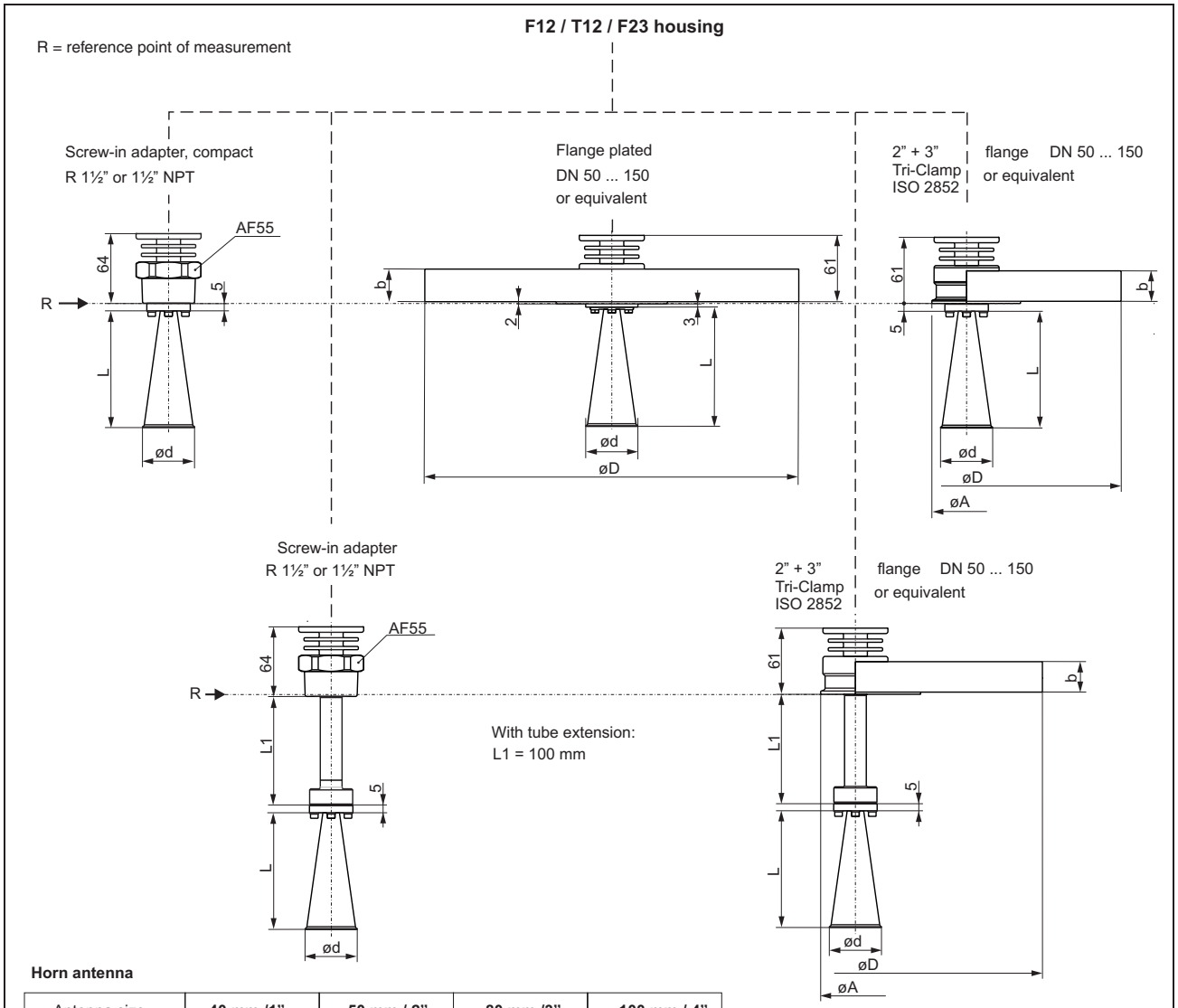

Horn antenna

Antenna size	40 mm /1"	50 mm / 2"	80 mm /3"	100 mm / 4"
L [mm]	86	115	211	282
d [mm]	40	48	75	95

Note!
material process connection = material horn antenna, resp. wetted parts of the process connection

Flange to EN 1092-1 (agreeable to DIN 2527)

Flange	DN 50	DN 80	DN 100	DN 150
b [mm]	18 (20)	20 (24)	20 (24)	22
D [mm]	165 (165)	200 (200)	220 (235)	285

for PN 16 (for PN 40)

Flange to JIS B2220

Flange	DN 50	DN 80	DN 100	DN 150
b [mm]	16	18	18	22
D [mm]	155	185	210	280

for 10K

Flange to ANSI B16.5

Flange	2"	3"	4"	6"
b [mm]	19.1 (22.4)	23.9 (28.4)	23.9 (31.8)	25.4
D [mm]	152.4 (165.1)	190.5 (209.5)	228.6 (254)	279.4

for 150 lbs (for 300 lbs)

Tri - Clamp to ISO 2852

Clamp	2"	3"
A	64	91

L00-FMR240xx-06-00-00-en-006

US EPA ARCHIVE DOCUMENT

Micropilot M FMR244 - Process connection and antenna

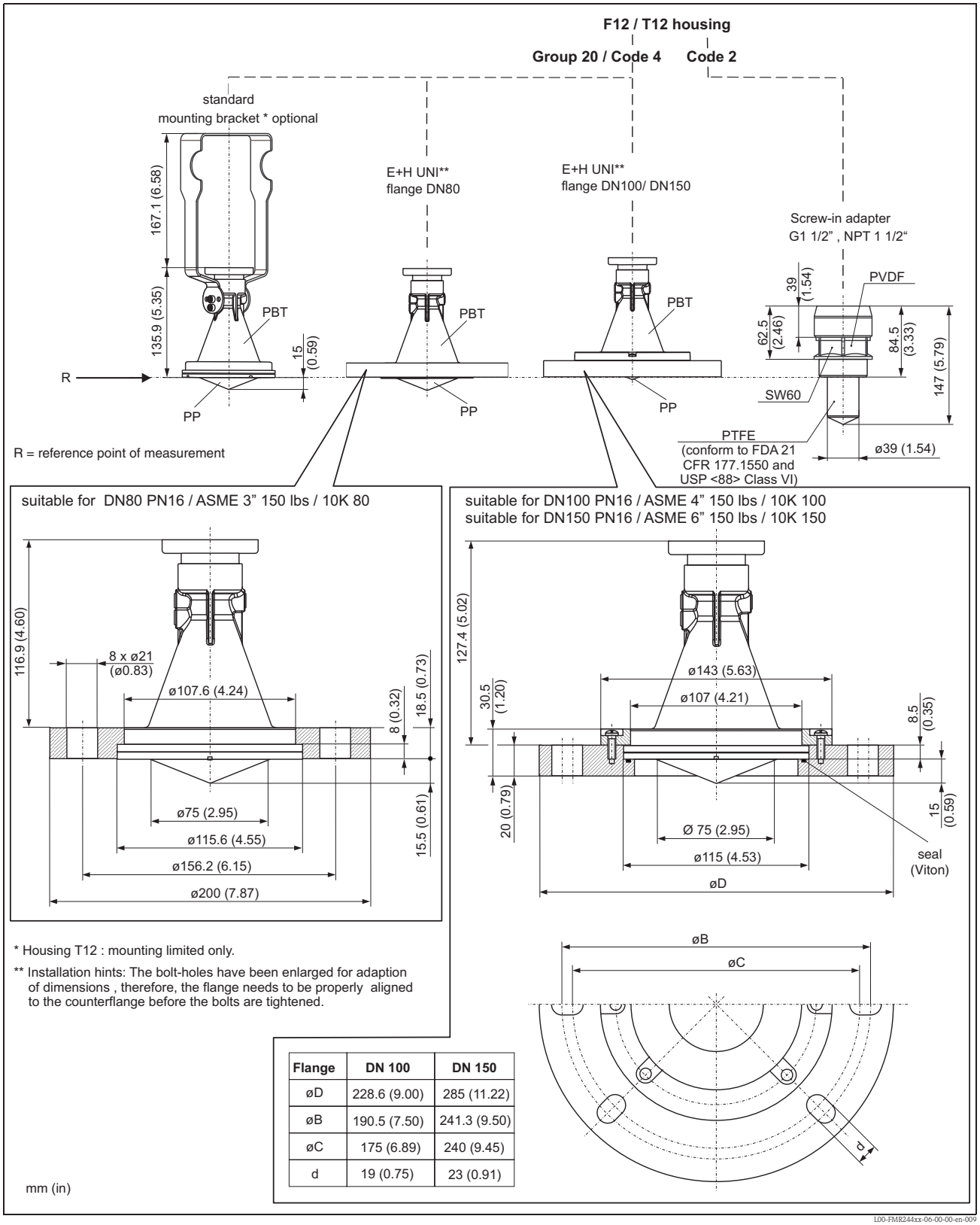

Flange	DN 100	DN 150
øD	228.6 (9.00)	285 (11.22)
øB	190.5 (7.50)	241.3 (9.50)
øC	175 (6.89)	240 (9.45)
d	19 (0.75)	23 (0.91)

US EPA ARCHIVE DOCUMENT

Micropilot M FMR245 - Process connection and antenna

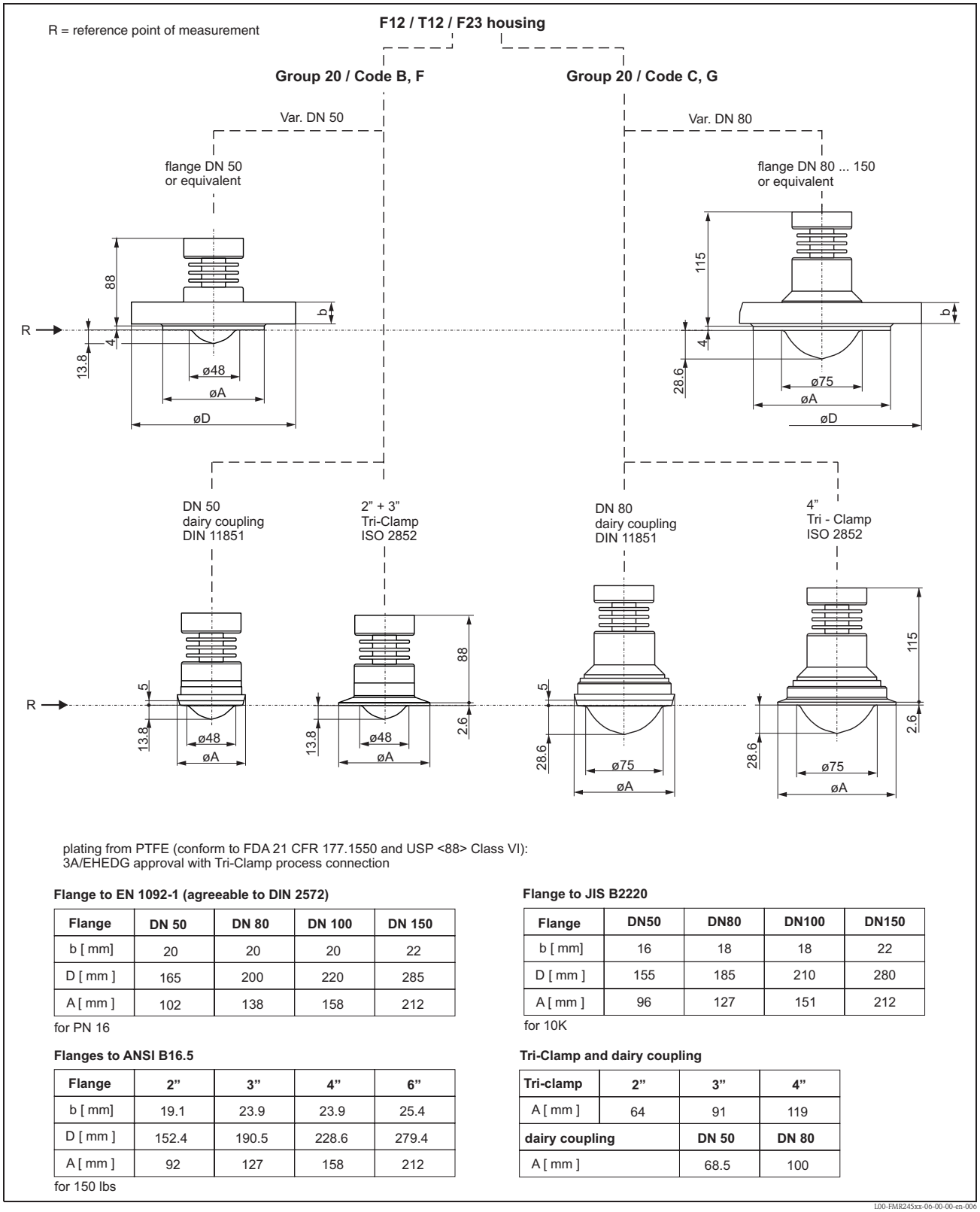

Flange to EN 1092-1 (agreeable to DIN 2572)

Flange	DN 50	DN 80	DN 100	DN 150
b [mm]	20	20	20	22
D [mm]	165	200	220	285
A [mm]	102	138	158	212

for PN 16

Flange to JIS B2220

Flange	DN50	DN80	DN100	DN150
b [mm]	16	18	18	22
D [mm]	155	185	210	280
A [mm]	96	127	151	212

for 10K

Flanges to ANSI B16.5

Flange	2"	3"	4"	6"
b [mm]	19.1	23.9	23.9	25.4
D [mm]	152.4	190.5	228.6	279.4
A [mm]	92	127	158	212

for 150 lbs

Tri-Clamp and dairy coupling

Tri-clamp	2"	3"	4"
A [mm]	64	91	119
dairy coupling		**DN 50**	**DN 80**
A [mm]		68.5	100

L00-FMR245xx-06-00-00-en-006

US EPA ARCHIVE DOCUMENT

Weight

Micropilot M	FMR230	FMR231	FMR240	FMR244	FMR245
Weight for F12 or T12 housing	Approx. 6 kg + weight of flange	Approx. 4 kg + weight of flange	Approx. 4 kg + weight of flange	Approx. 2,5 kg	Approx. 4 kg + weight of flange
Weight for F23 housing	Approx. 9,4 kg + weight of flange	Approx. 7,4 kg + weight of flange	Approx. 7,4 kg + weight of flange	–	Approx. 7,4 kg + weight of flange

Material (not in contact with process)

T12 and F12 housing (seawater-resistant*, powder-coated)

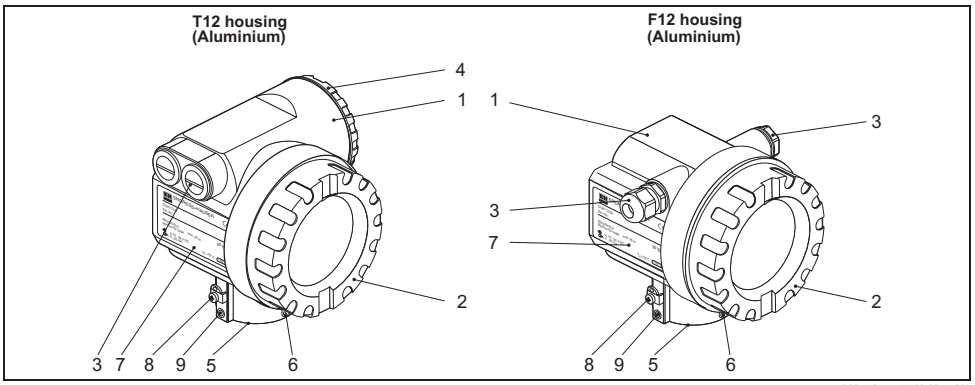

L00-x12xxxx-16-00-00-en-001

Pos.	Part	Material	
1	T12 and F12 housing	AlSi10Mg	
2	Cover (Display)	AlSi10Mg	
	Sealing	Fa. SHS: EPDM 70pW FKN	
	Window	ESG-K-Glass (Toughened safety glass)	
	Sealing of the glass	Silicone sealing compound Gomastit 402	
3	Sealing	Fa. SHS: EPDM 70 pW FKN	Trelleborg: EPDM E7502
	Cable gland	Polyamid (PA), CuZn nickel-plated	
	Plug	PBT-GF30	1.0718 galvanized
		PE	3.1655
	Adapter	316L (1.4435)	AlMgSiPb (anodized)
4	Cover (Connection compartment)	AlSi10Mg	
	Sealing	Fa. SHS: EPDM 70pW FKN	Trelleborg: EPDM E7502/E7515
	Clamp	Screws: A4; Clamp: Ms nickel-plated; Spring washer: A4	
5	Sealing ring	Fa. SHS: EPDM 70pW FKN	Trelleborg: EPDM E7502/E7515
6	Tag	304 (1.4301)	
	Rope	VA	
	Crimp sleeve	Aluminium	
7	Nameplate*	304 (1.4301)	
	Groove pin*	A2	
8	Ground terminal*	Screws: A2; Spring washer: A4; Clamp: 304 (1.4301) Holder: 301 (1.4310)	
9	Screws*	A2-70	

* Seawater-resistant on request (complete in 316L (1.4404)).

US EPA ARCHIVE DOCUMENT

F23 housing (seawater-resistant*, corrosion-resistant)

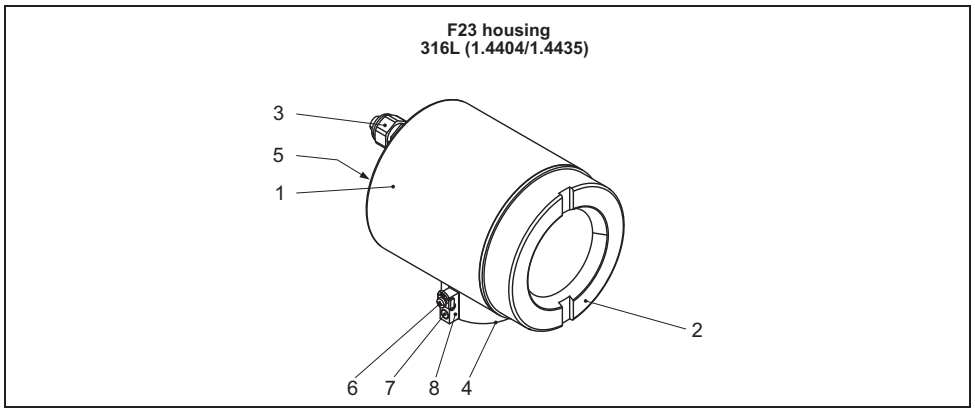

L00-x12xxxx-16-00-00-en-001

Pos.	Part	Material	
1	F23 housing	Housing body: 316L (1.4404); Sensor neck: 316 L(1.4435); earth connection block: 316L (1.4435)	
2	Cover	316L (1.4404)	
	Sealing	Fa. SHS: EPDM 70pW FKN	
	Window	ESG-K-Glass (Toughened safety glass)	
	Sealing of the glass	Silicone sealing compound Gomastit 402	
3	Sealing	Fa. SHS: EPDM 70pW FKN	Trelleborg: EPDM E7502
	Cable gland	Polyamid (PA), CuZn nickel-plated	
	Plug	PBT-GF30	1.0718 galvanized
		PE	3.1655
	Adapter	316L (1.4435)	
4	Sealing ring	Fa. SHS: EPDM 70pW FKN	Trelleborg: EPDM E7502
5	Nameplate*	304 (1.4301)	
	Groove pin*	A2	
6	Grounding terminal*	Screws: A2; Spring washer: A4; Clamp: 304 (1.4301); Holder: 301 (1.4310)	
7	Screw*	A2-70	
8	Tag	304 (1.4301)	
	Rope	316 (1.4401)	
	Crimp sleeve	Aluminium	

* Seawater-resistant on request (complete in 316L (1.4404)).

US EPA ARCHIVE DOCUMENT

Material
(in contact with process)

FMR230

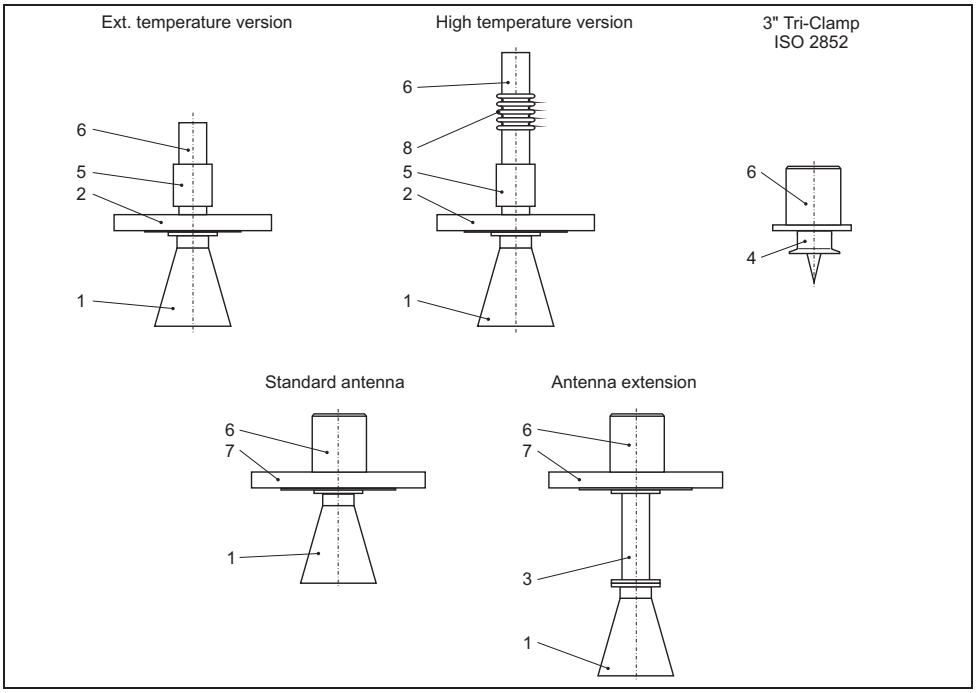

L00-FMR230xx-16-00-00-en-003

Pos.	Part	Material	
1	Horn antenna	316L (1.4404)	Hastelloy
	Screw	A4	Hastelloy
	Spring washer	A4	
2	Flange	316L (1.4404/1.4435)	
3	Antenna extension	316L (1.4435)	Hastelloy
	Screws	A4	Hastelloy
	Spring washer	A4	
4	Process connection (e.g. Tri-Clamp)	316L (1.4435)	
	Coupling		
5	Process separation	316L (1.4404)	
6	Housing adapter	304 (1.4301)	
7	Flange	316L (1.4404) optional Hastelloy plated	
	Coupling	316L (1.4435)	Hastelloy
8	Temperature reduction	304 (1.4301)	

US EPA ARCHIVE DOCUMENT

FMR231

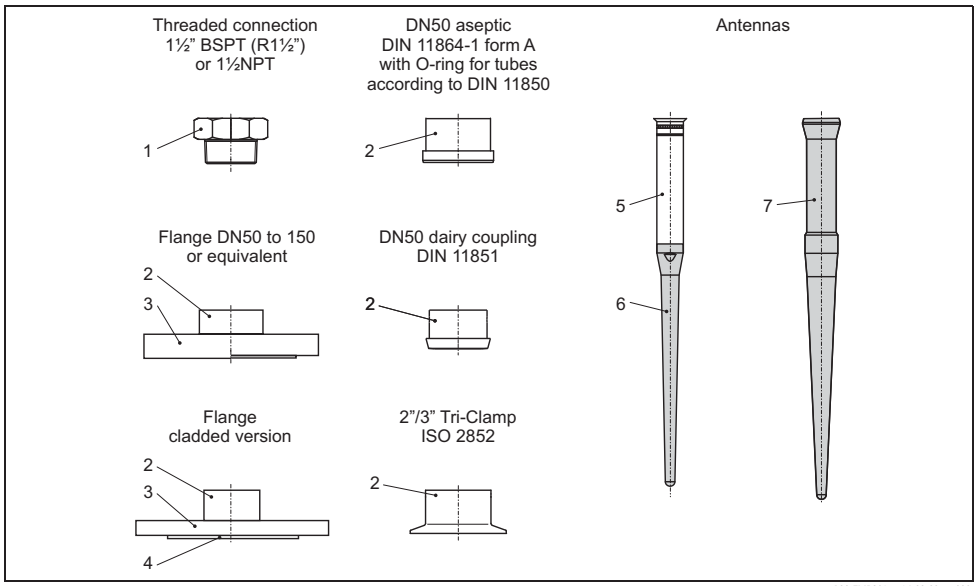

Pos.	Bauteil	Werkstoff
1	Adapter	316L (1.4435)
		PVDF
2	Adapter	316L (1.4435)
3	Flange	316L (1.4404/1.4435)
4	Plating	PTFE
5	Pipe	316L (1.4435)
6	Rod antenna	PPS, antistatic
7	Rod antenna	PTFE, antistatic
		PTFE, conform to FDA 21 CFR 177.1550 and USP <88> Class VI (in conjunction with flange, DN50 aseptic/dairy coupling respectively Tri-clamp)

US EPA ARCHIVE DOCUMENT

FMR240

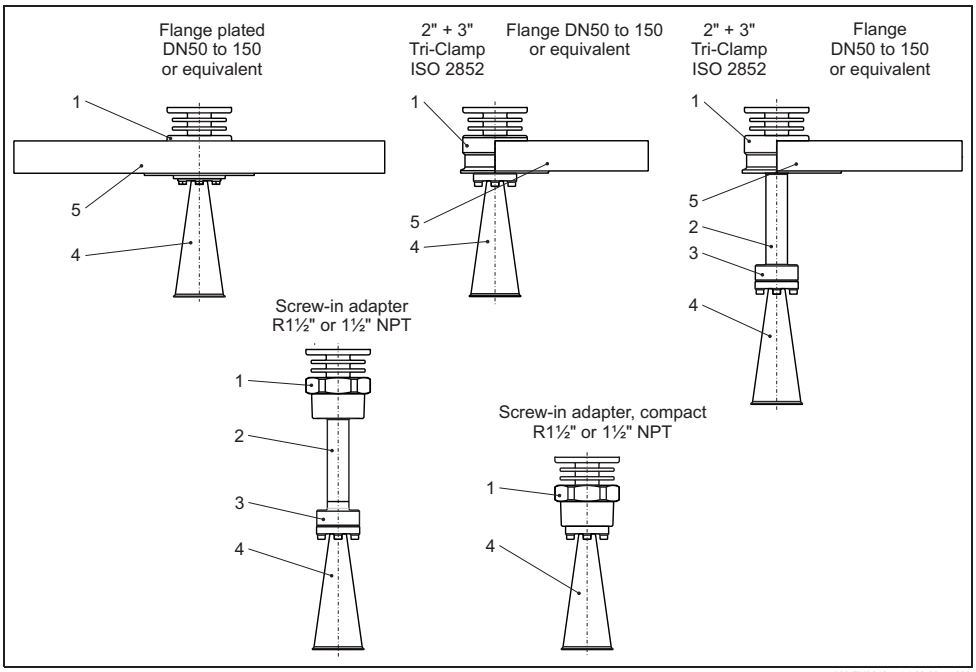

L00-FMR240xx-16-00-00-en-003

Pos.	Part	Material	
1	Adapter	316L (1.4404)	
	Mounting plate		
2	Pipe extension	316L (1.4404)	
3	Process adapter extension	316L (1.4404)	
	Mounting plate		
4	Horn	316L (1.4404)	Hastelloy C22
	Screws	A4	Hastelloy C22
	Spring washer	A4	
5	Flange	316L (1.4404) optional Hastelloy C22 plated	

US EPA ARCHIVE DOCUMENT

FMR244

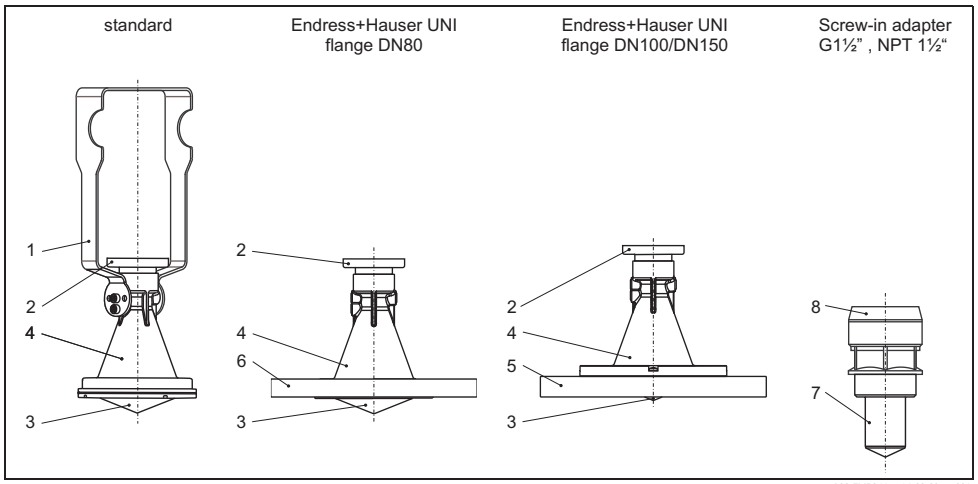

Pos.	Part	Material
1	Mounting bracket	304 (1.4301)
	Screws	A2
	Nordlock disk	A4
2	Adapter	304 (1.4301)
3	Focusing refractor	PP
	Sealing	Silicone
4	Horn	PBT
5	Flange + adapter ring	PP
	Screws	A2
	Sealing	Viton
6	Collar flange	PP
7	Sleeve	PTFE (conform to FDA 21 CFR 177.1550 and USP <88> Class VI)
	Sealing	Viton
8	Adapter	PVDF

US EPA ARCHIVE DOCUMENT

FMR245

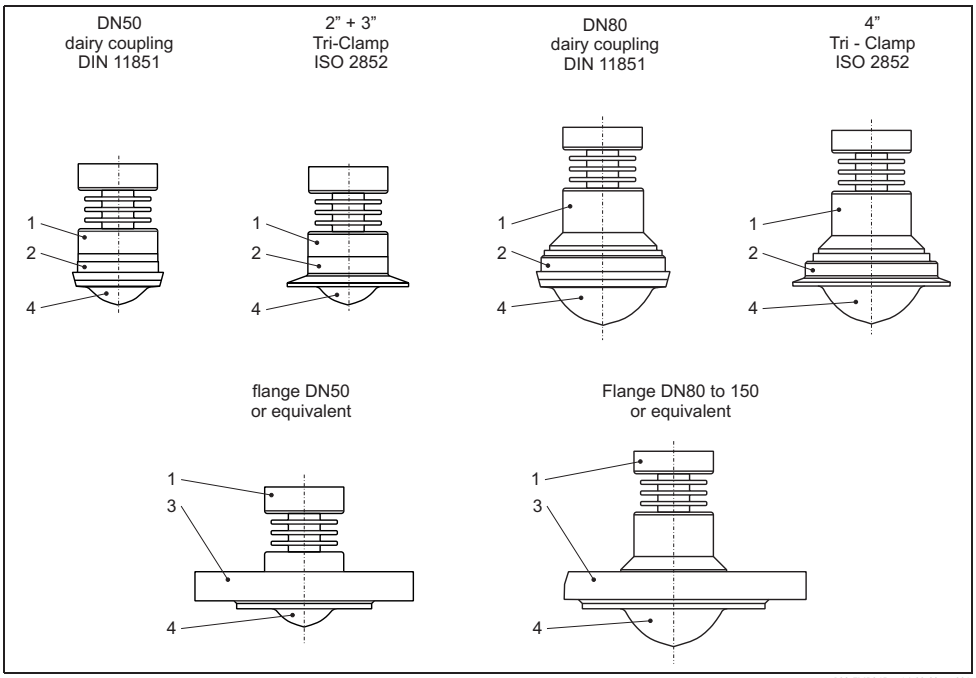

Pos.	Part	Material
1	Adapter	304 (1.4301)
2	Process connection	316L (1.4435)
3	Flange	316L (1.4404 / 1.4435)
4	Plating	PTFE (conform to FDA 21 CFR 177.1550 and USP <88> Class VI)

Flange

Endress+Hauser supplies DIN/EN flanges made of stainless steel AISI 316L with the material number 1.4404 or 1.4435. With regard to their temperature stability properties, the materials 1.4404 and 1.4435 are grouped under 13E0 in EN 1092-1 Tab. 18. The chemical composition of the two materials can be identical.

Process connection

See "Ordering information", → 📄 63ff.

Note!
Material process connection = material horn antenna, resp. wetted parts of the process connection.

Seal

See "Ordering information", → 📄 63ff.

Antenna

See "Ordering information", → 📄 63ff.

Note!
Material process connection = material horn antenna, resp. wetted parts of the process connection.

US EPA ARCHIVE DOCUMENT

US EPA ARCHIVE DOCUMENT

Instruments International

Endress+Hauser
Instruments International AG
Kaegenstrasse 2
4153 Reinach
Switzerland

Tel.+41 61 715 81 00
Fax+41 61 715 25 00
www.endress.com
info@ii.endress.com

Endress+Hauser
People for Process Automation

TI00345F/00/EN/14.11
71139051
FM+SGML 9.0 ProMoDo

Vaisala Rain Gauge RG13, RG13H

Features/Benefits

- Designed to measure rainfall and precipitation in remote and unattended locations
- Provides accurate measurements with long term performance
- Requires no regular maintenance
- Economical and proven in operation

The Vaisala Rain Gauge RG13, RG13H uses a tipping-bucket mechanism to produce a contact closure every time it receives a predetermined small quantity of rainfall (0.2 mm).

The body and funnel of the gauge are of aluminium alloy. An accurately machined septum-ring at the top gives an aperture of exactly 400 cm^2. The tipping-bucket mechanism is mounted inside the body on a cast aluminium-alloy base equipped with fixing slots, three levelling screws and a spirit level.

The mechanism consists of a divided bucket pivoted at its centre. Rain collects in the upper half. When this is full, the mechanism tilts and discharges the collected water, allowing the other half of the bucket to begin filling.

A siphon device is fitted to the base of the funnel to control the rate of flow into the buckets. By ensuring a constant flow rate into the tipping bucket, calibration is made easier and accuracy improved. The alternate filling and discharging continue as long as rain is falling, and at each tilt, a magnet momentarily closes the contacts of a reed switch.

In the rain gauge of type RG13H, a heater element is provided inside the body in order to melt snow. The heater switches on at temperatures below +4 °C.

Technical Data

Diameter of aperture	225 mm
Area of aperture	400 cm^2
Rainfall capacity	unlimited
Sensitivity (rainfall per pulse)	0.2 mm
Dimensions	
Height	390 mm
Diameter	300 mm
Weight	2.5 kg
Operating temp. range	-40 ... +60 °C
Heating connection/disconnection at	+4 °C
Heating power	40 W (1 A / 40 VDC)
Accuracy	1 % (at 25 mm/h)
Resolution	0.2 mm (also 0.1 mm and 0.5 mm available)

VAISALA

For more information, visit www.vaisala.com or contact us at sales@vaisala.com

Ref. B010195EN-D ©Vaisala 2010
This material is subject to copyright protection, with all copyrights retained by Vaisala and its individual partners. All rights reserved. Any logos and/or product names are trademarks of Vaisala or its individual partners. The reproduction, transfer, distribution or storage of information contained in this brochure in any form without the prior written consent of Vaisala is strictly prohibited. All specifications — technical included — are subject to change without notice.

CE

MACTEC

engineering and constructing a better tomorrow

July 26, 2011

Mr. David J. Millay, P.E.
LG&E-KU Services Company, Inc.
220 West Main Street
Louisville, Kentucky 40202
Phone: 502-627-2468
Facsimile: 502-217-2850
Electronic mail: David.Millay@LG&E-KU.com

SUBJECT: Addendum B
Report of Geotechnical Exploration and Slope Stability Analyses
KU Green River Power Station – No 2 Pond/Coal Pile Runoff Pond and Scrubber Pond
South Carrollton, Muhlenberg County, Kentucky
MACTEC Project No. 3143-10-1317.02

Dear Mr. Millay:

MACTEC Engineering and Consulting, Inc. (MACTEC) is pleased to submit this Addendum to our *Report of Geotechnical Exploration and Slope Stability Analyses,* dated December 3, 2010. The purpose of this addendum was to:

- Provide responses and clarifications to the recommendations by EPA's contractor, AMEC, as noted in Enclosure 2 of their report dated on June 27, 2011 issued to Kentucky Utilities.

- Submit additional Seepage and Slope Stability analyses as requested by Mr. David Millay in an electronic transmittal issued to Nick Schmitt, dated on June 22, 2011.

A discussion of each of the above items follows. Our services were provided in general accordance with our Master Agreement No. 31528, Contract No. 495429 dated August 23, 2010, and our Proposal No. PROP10LVLE Task 162. This Addendum should be attached to and made part of the referenced report.

RESPONSE TO EPA REPORT

The EPA contractor's comments and recommendations in the Dam Safety Assessment draft report were based, in part, on visual observation of site conditions and review of MACTEC's *Geotechnical Exploration and Slope Stability Analyses Data Package* for the No 2 Pond/Coal Pile Runoff Pond and Scrubber Pond at the KU Green River Power Station in South Carrollton, Muhlenberg County, Kentucky, dated December 3, 2010.

Below is a listing of the EPA contractor's comments and recommendations, each followed by our response or clarification.

1. *"Section 4 is located on the east embankment of Ash Treatment Basin #2. AMEC is concerned with the configuration and soil strength parameters used in the analyses. AMEC recommends this section be reviewed for existing conditions and parameters adjusted to reflect softer conditions at the toe. The wet areas may also reflect seepage from the pond; and therefore, higher water levels would need to be utilized in the pond and embankment analyses."*

   MACTEC Response: Our rationale for selection of soil strength parameters was provided in Section 5.3 of our *Report of Geotechnical Exploration and Slope Stability Analyses.* Laboratory testing (triaxial shear tests) of the material encountered in Section 4 was conducted to identify the appropriate cohesion and phi angle values. The selected parameters used in our analysis provide, in our opinion, the appropriate level of conservatism and we do not recommend further adjustments. MACTEC does not suggest manipulating the phreatic surface in Section 4 from the calculated levels; the phreatic surface generated in the analyses under steady state conditions reflects actual conditions in the field.

2. *"AMEC recommends Kentucky Utilities evaluate the need to revise the stability analyses for Ash Treatment Basin #2 [Number 2 Pond] resulting from any changes made to improve the hydraulics of the facility as described in the previous section."*

   MACTEC Response: Based on the re-grading measures taken by KU to raise the crest elevation to 400.5 feet, it is our opinion that an analysis depicting this grade change under steady state and transient conditions would not have a significant change in factors of safety.

3. *"A rapid-drawdown should be performed for upstream embankment [No 2 pond] in case the pond would need to be lowered in response to a problem, and the downstream embankment in relation to flooding of Green River."*

   MACTEC Response: The stability of the selected cross sections at the Number 2 Pond was originally evaluated under rapid drawdown for the upstream embankments. The target factors of safety were met and the results of these analyses were provided in our *Report of Geotechnical Exploration and Slope Stability Analyses.* A "tail water" study based on the flooding of the Green River, including a rapid drawdown analysis of the downstream embankments for the Number 2 pond was conducted. The results of the analysis show that the target safety factors referenced from both KEEC and USACE were either met or exceeded. The results are shown in Table 2 of this Addendum.

4. *"A rapid-drawdown should be performed [Coal Pile Runoff Pond] for upstream embankment in case the pond would need to be lowered in response to a problem, and the downstream embankment in relation to flooding of Green River."*

MACTEC Response: The stability of the selected cross sections at the Coal Pile Runoff Pond was originally evaluated under rapid drawdown for the upstream embankments. The target factors of safety were met and the results of these analyses were provided in our *Report of Geotechnical Exploration and Slope Stability Analyses*. A tail water study based on the flooding of the Green River, including a rapid drawdown analysis of the downstream embankments for the Coal Pile Runoff pond was conducted. The results of the analysis show that the target safety factors referenced from both KEEC and USACE were either met or exceeded. The results are shown in Table 2 of this Addendum.

We trust the information provided above along with the analysis discussed in the subsequent section of this Addendum, sufficiently clarify the EPA contractor's comments related to our *Report of Geotechnical Exploration and Slope Stability Analyses* for the Green River No 2 Pond/Coal Pile Runoff Pond and Scrubber Pond. Please let us know if additional assistance is required.

SEEPAGE AND STABILITY ANALYSES

Additional Seepage and Slope Stability analyses were performed in order to address the EPA contractor's concerns and to accommodate your request. All analyses in Addendum B were modeled in SEEP/W and SLOPE/W, developed by GEO-SLOPE International, Ltd., using the same material and soil strength properties as shown in our *Report of Geotechnical Exploration and Slope Stability Analyses,* dated December 3, 2010.

Analysis Description

The analysis performed included:

- A tail water study of the Number 2 Pond and Coal Pile Runoff Pond analyzing the fluctuations of the Green River as depicted by the hypothetical flood stage hydrograph data developed by LG&E and KU Services Company, based on records they had reviewed. The tail water study was conducted in order to determine more accurate factors of safety in a rapid drawdown case under transient conditions.

- A steady state analysis of the downstream embankment of Section 1 of the Coal Pile Runoff Pond, in order to improve the factors of safety by providing operational or construction recommendations.

- A Seismic Analysis of Section 1 (downstream), Section 4 (upstream), and Section 5 (upstream) of the Number 2 Pond and Coal Pile Runoff Pond.

Tail Water Study

MACTEC performed a "tail water study" (inundation of the embankment due to flooding of the Green River) under transient conditions of the Number 2 Pond and Coal Pile Runoff Pond downstream embankments using SEEP/W. The embankments were modeled so that the maximum normal operating pool elevations were held constant, and the Green River incrementally fluctuated from the toe elevation to the crest elevation, and back down to the toe

elevation, for each section in accordance with the provided flood stage hydrograph data. The phreatic surfaces were calculated using time increments of one day throughout the flood cycle.

Hydraulic conductivity values were necessary in order to obtain phreatic surfaces developed by SEEP/W. The hydraulic conductivity values used were based on grain size distributions and industry accepted values for similar soil types. Table 1 depicts the hydraulic conductivities used for the SEEP/W analysis.

Table 1. Summary of hydraulic conductivity values

Material Type	Vertical Hydraulic Conductivity k_Y (ft/s)	Vertical Hydraulic Conductivity k_X (ft/s)
Clay Fill	6.56E-009 to 2.36E-006	3.28E-009 to 1.18E-006
Alluvium	2.36E-006	1.18E-006
CCW Fly Ash	1E-004	5E-005
CCW Bottom Ash	1.54E-003	7.68E-004
Rip Rap	3	3

Drawn by: AIS
Checked by: NGS

The critical phreatic surfaces for each section provided by SEEP/W under transient conditions were analyzed for slope stability. The combined results are provided in the attachments to this Addendum.

Downstream Rapid Draw Down Slope Stability Analysis

MACTEC performed a downstream rapid drawdown slope stability analysis using SLOPE/W. The slope stability analysis for each section was performed for each phreatic surface developed by SEEP/W. The lowest factor of safety generated by SLOPE/W for each section is shown in Table 2.

Table 2. Summary of downstream rapid drawdown factors of safety.

Location	Section	Rapid Drawdown Factor of Safety
Coal Pile Runoff Pond	S-1	1.2
Number 2 Pond	S-2	1.9
Number 2 Pond	S-3	2.2
Number 2 Pond	S-4	2.1
Number 2 Pond	S-5	2.5

Drawn by: AIS
Checked by: NGS

As outlined in Section 5 of our *Report of Geotechnical Exploration and Slope Stability Analyses,* dated December 3, 2010, the target factor of safety for a rapid drawdown analysis is a minimum of 1.1 according to USACE EM 1110-2-1902: Slope Stability, and 1.2 according to KEEC Design Criteria for Dams & Associated Structures (401 KAR 4:030, KAR 4:040). The lowest factors of safety, as shown in Table 2, exceed the minimum values. The slope stability models which include the phreatic surfaces developed in SEEP/W are shown in the results of this Addendum.

Steady State Slope Stability Improvements of Section 1

MACTEC analyzed Section 1 of the Coal Pile Runoff Pond, in an effort to improve the factor of safety. The steady state slope stability analysis of Section 1 of the Coal Pile Runoff Pond returns a factor of safety of 1.4. Two options to effectively raise the factor of safety to 1.5 were analyzed:

- Create a rock buttress large enough to influence the resisting forces to increase the factor of safety to 1.5, or;

- Lower the normal operating pool elevation enough to influence the driving forces to increase the factor of safety to 1.5.

A 4.4 cubic yard/linear-foot rock buttress was added to the Section 1 embankment model and analyzed in steady state at the maximum flood elevation of 404.7 feet. The addition of a 4.4 cubic yard/linear-foot rock buttress situated along the toe of Section 1 will improve the factor of safety to 1.5. The rock buttress can be designed in a way that will not encroach on the surrounding tree line.

The maximum normal operating pool elevation for Section 1 was incrementally lowered until an optimum phreatic surface was found that would yield a factor of safety of 1.5. The analysis was conducted under steady state conditions for when the phreatic surface was maintained at the optimum level, and then raised to the maximum flood elevation of 404.7 feet. A factor of safety of 1.5 can be achieved by lowering the maximum normal operating pool 11 feet to an elevation of 393 feet. The results of the steady state slope stability improvements of Section 1 can be found in the attached results of this Addendum.

Seismic Analysis Study

A seismic analysis of the Number 2 Pond/Coal Pile Runoff Pond and Scrubber pond was previously conducted in our *Report of Geotechnical Exploration and Slope Stability Analyses,* dated December 3, 2010 using STABLE6H. The target factor of safety of 1.0, as referenced in our report, was exceeded except in three locations- Section 1(downstream), Section 4(upstream), and Section 5(upstream). Section 4 was modeled with a highly conservative horizontal acceleration. These sections were re-examined using our GEO-SLOPE based programs, and compared with the previous factors of safety. In addition, Section 1with the added rock buttress was analyzed.

The seismic conditions were modeled using a peak horizontal ground acceleration of 0.10g for Section 1 and Section 5 and 0.28g for Section 4 in the previous analysis, and 0.08g for all three sections in the re-examined analysis. The horizontal accelerations of 0.10g and 0.28g were derived from inspecting the USGS hazard maps available on the USGS National Seismic Hazard Mapping Project (NSHMP) database, whereas, the horizontal acceleration of 0.08g was obtained using USGS (NSHMP) software that based the horizontal acceleration values on latitude and longitude of the project site. The results of the factor of safety comparison are shown in Table 3.

Table 3. Comparison Summary of factors of safety for seismic analysis.

Location	Section	STABLE6H Factors of Safety	GEO-SLOPE Factors of Safety using a 0.08g horizontal acceleration
Coal Pile Runoff Pond	1- Downstream	1.0	1.0
Coal Pile Runoff Pond	1-Downstream with Rock Buttress	Post dated design	1.1
Number 2 Pond	4- Upstream	1.0	1.3
Number 2 Pond	5- Upstream	0.8	1.0

Drawn by: AIS
Checked by: NGS

A horizontal acceleration of 0.08g corresponds to a 10 per cent probability of exceedance in 50 years with a return period of 500 years. The slope stability analysis modeled in SLOPE/W for Section 1 (downstream), Section 1 with a rock buttress (downstream), Section 4 (upstream), and Section 5 (upstream) are presented in the results attached to this Addendum.

CLOSURE

This Addendum should be attached to and made part of our *Report of Geotechnical Exploration and Slope Stability Analyses,* dated December 29, 2010. We appreciate the continued opportunity to work with you on this project. Please contact us if you have any questions regarding the information presented in this letter.

Sincerely,

MACTEC ENGINEERING AND CONSULTING, INC.

STATE OF KENTUCKY
NICHOLAS G. SCHMITT
10311
LICENSED
PROFESSIONAL ENGINEER

Ariel I. Sarno, E.I.T.
Staff Engineer

Nicholas G. Schmitt, P.E.
Senior Principal Engineer
Licensed Kentucky 10311

Attachments: Results of Slope Stability Analyses – Green River Power Station No 2 Pond/Coal Pile Runoff Pond and Scrubber Pond

RESULTS:

TAIL WATER STUDY

- **Transient seepage conditions**
- **Rapid draw down slope stability**

Slope Stability (Transient/Rapid Draw Down) Analysis for the Critical Phreatic Surface, Section - 1 of the Coal Pile Run-off Pond

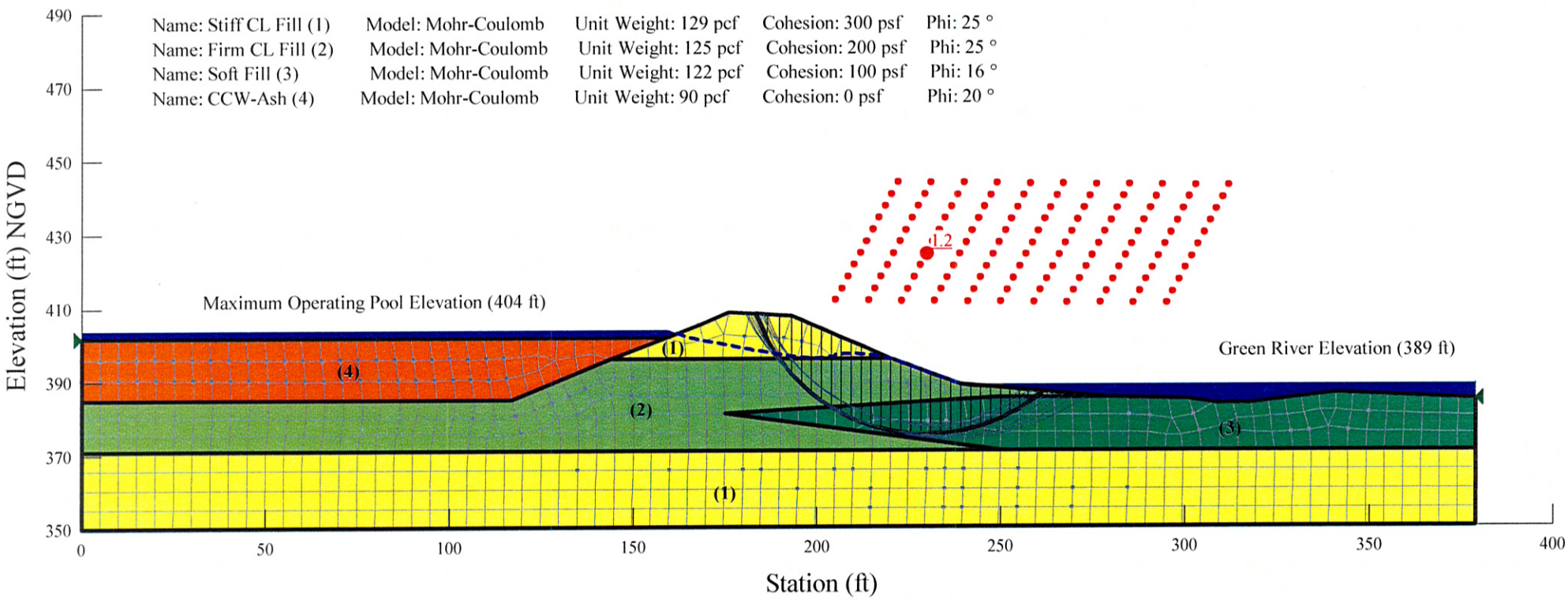

Slope Stability (Transient/Rapid Draw Down) Analysis for the Critical Phreatic Surface, Section - 2 of the Number 2 Pond

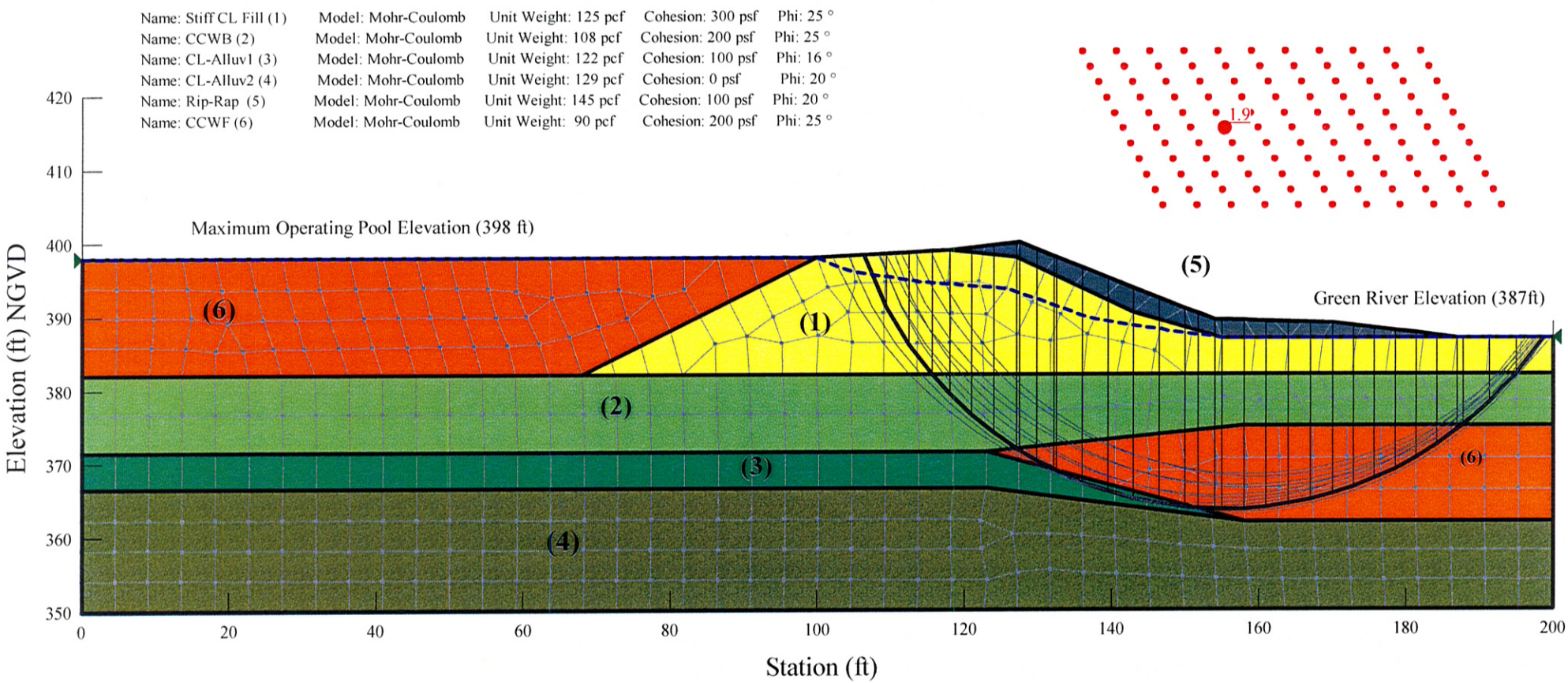

Slope Stability (Transient/Rapid Draw Down) Analysis for the Critical Phreatic Surface, Section - 3 of the Number 2 Pond

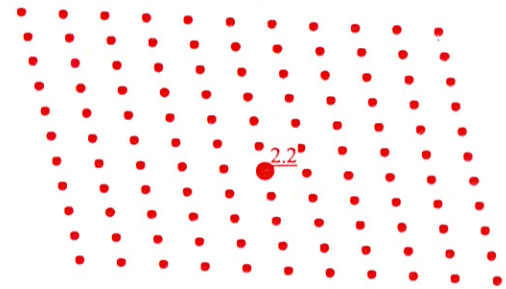

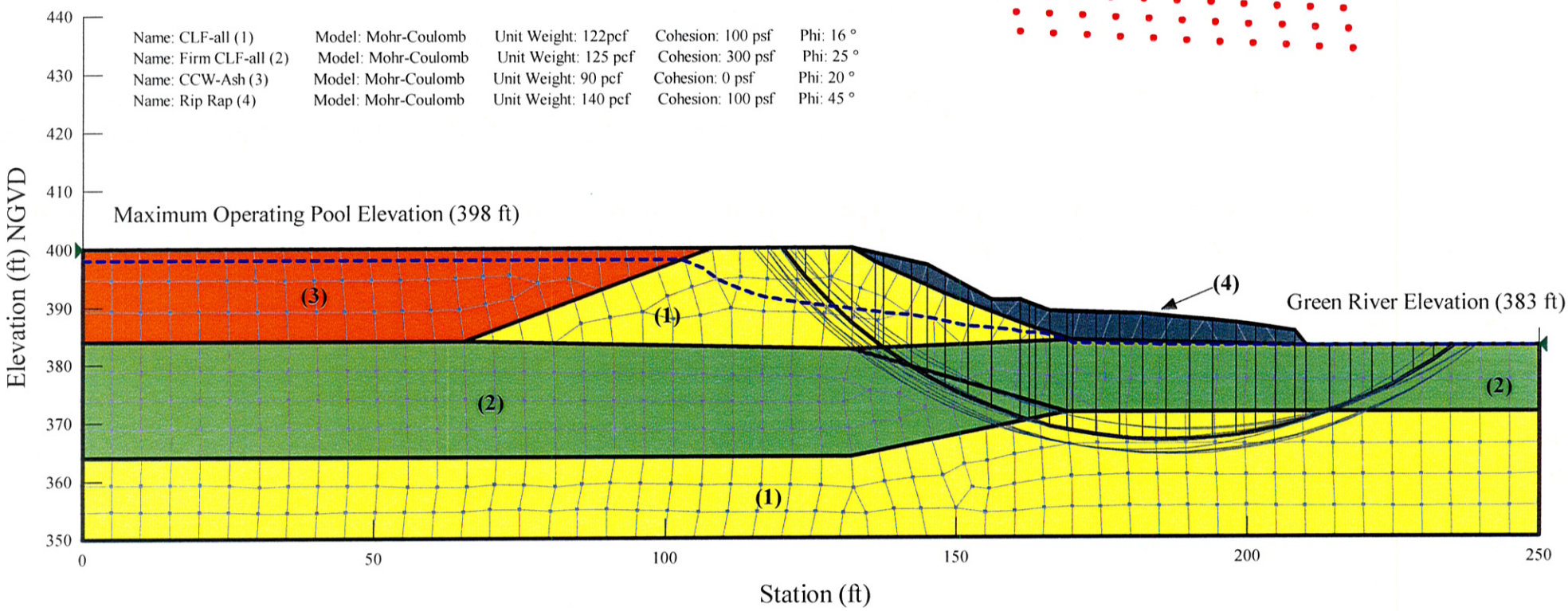

Slope Stability (Transient/Rapid Draw Down) Analysis for the Critical Phreatic Surface, Section - 4 of the Number 2 Pond

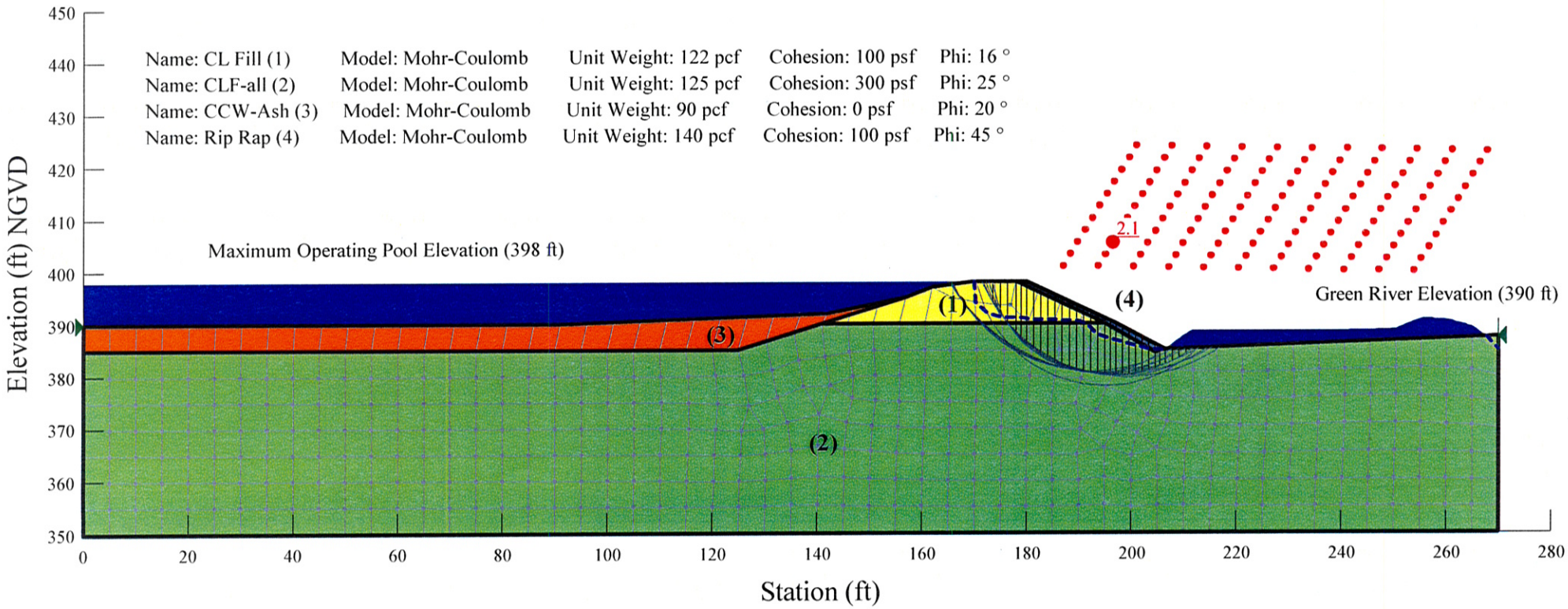

Slope Stability (Transient/Rapid Draw Down) Analysis for the Critical Phreatic Surface, Section - 5 of the Number 2 Pond

Name: CLF Alluv (1)	Model: Mohr-Coulomb	Unit Weight: 122 pcf	Cohesion: 100 psf	Phi: 16 °
Name: CL Alluv (2)	Model: Mohr-Coulomb	Unit Weight: 125 pcf	Cohesion: 300 psf	Phi: 25 °
Name: CL Fill (3)	Model: Mohr-Coulomb	Unit Weight: 129 pcf	Cohesion: 300 psf	Phi: 25 °
Name: CCW-Ash (4)	Model: Mohr-Coulomb	Unit Weight: 90 pcf	Cohesion: 0 psf	Phi: 20 °
Name: Rip Rap (5)	Model: Mohr-Coulomb	Unit Weight: 140 pcf	Cohesion: 100 psf	Phi: 45 °

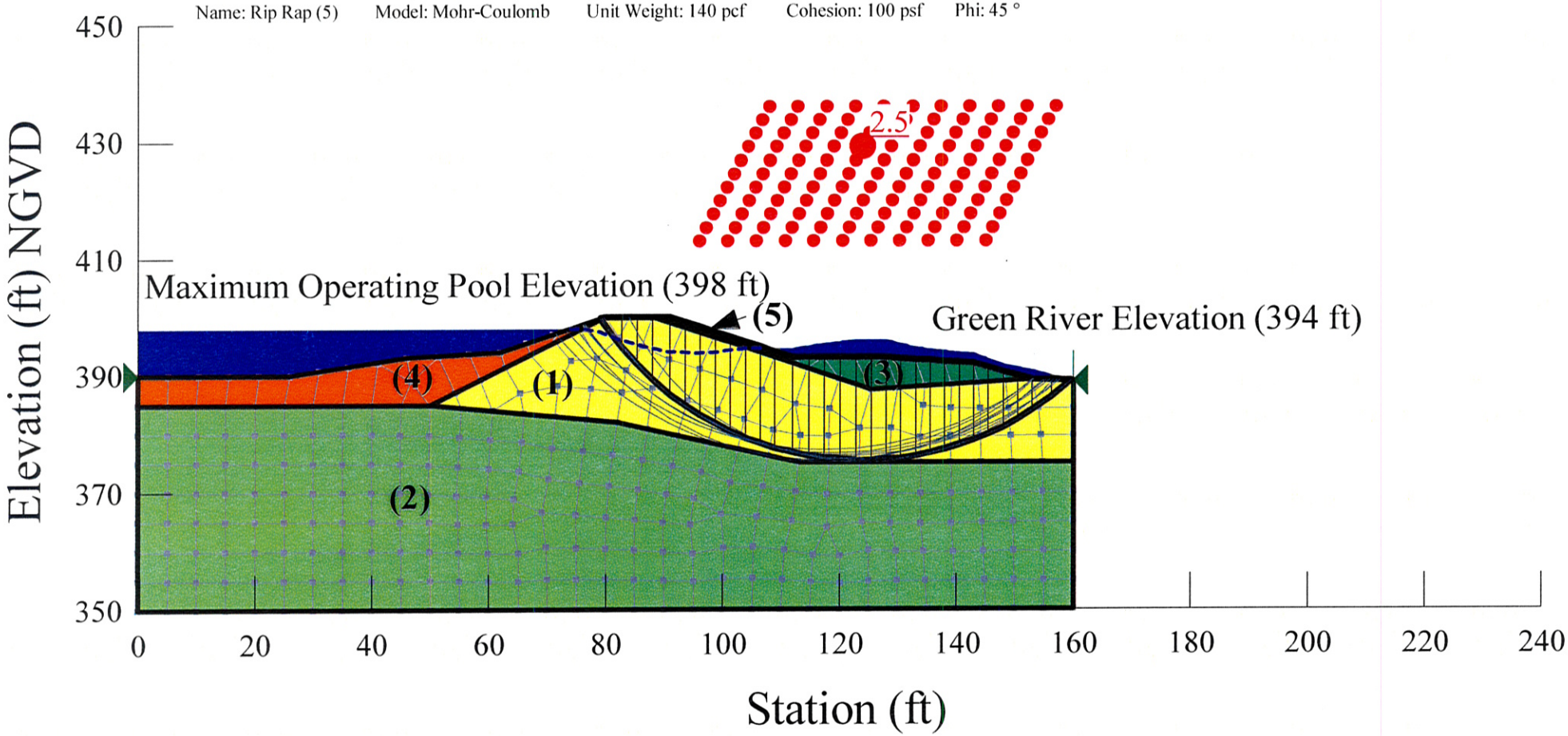

RESULTS:

SECTION 1 IMPROVEMENT OPTIONS

- **Rock Buttress**
- **Lowering the maximum operating pool elevation**

Slope Stability (Steady State) Analysis for Section - 1 of the Coal Pile Run-off Pond with a Rock Buttress at a Maximum Flood Elevation of 404.7 ft

Name: Stiff CL Fill (1)	Model: Mohr-Coulomb	Unit Weight: 129 pcf	Cohesion: 300 psf	Phi: 25 °
Name: Firm CL Fill (2)	Model: Mohr-Coulomb	Unit Weight: 125 pcf	Cohesion: 200 psf	Phi: 25 °
Name: Soft Fill (3)	Model: Mohr-Coulomb	Unit Weight: 122 pcf	Cohesion: 100 psf	Phi: 16 °
Name: CCW-Ash (4)	Model: Mohr-Coulomb	Unit Weight: 90 pcf	Cohesion: 0 psf	Phi: 20 °
Name: Rock Buttress	Model: Mohr-Coulomb	Unit Weight: 145 pcf	Cohesion: 100 psf	Phi: 20 °

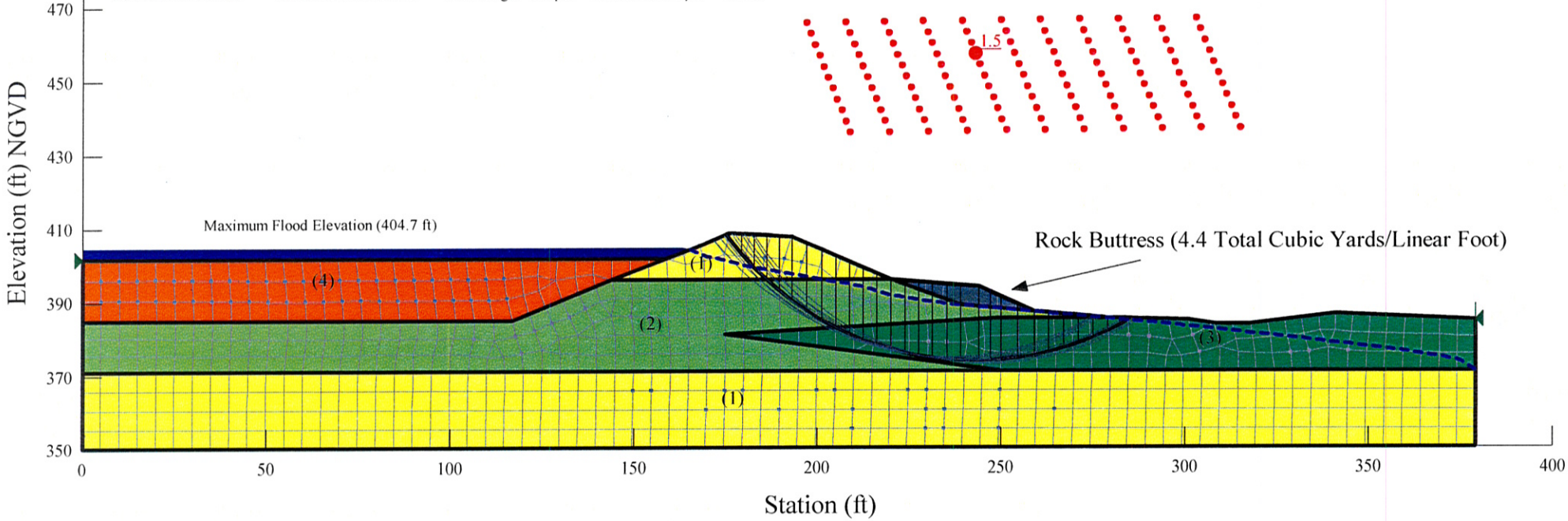

Slope Stability (Steady State) Analysis for Section - 1 of the Coal Pile Run-off Pond After Lowering the Normal Operating Pool Elevation to 393 feet, from the Maximum Flood Elevation of 404.7 ft

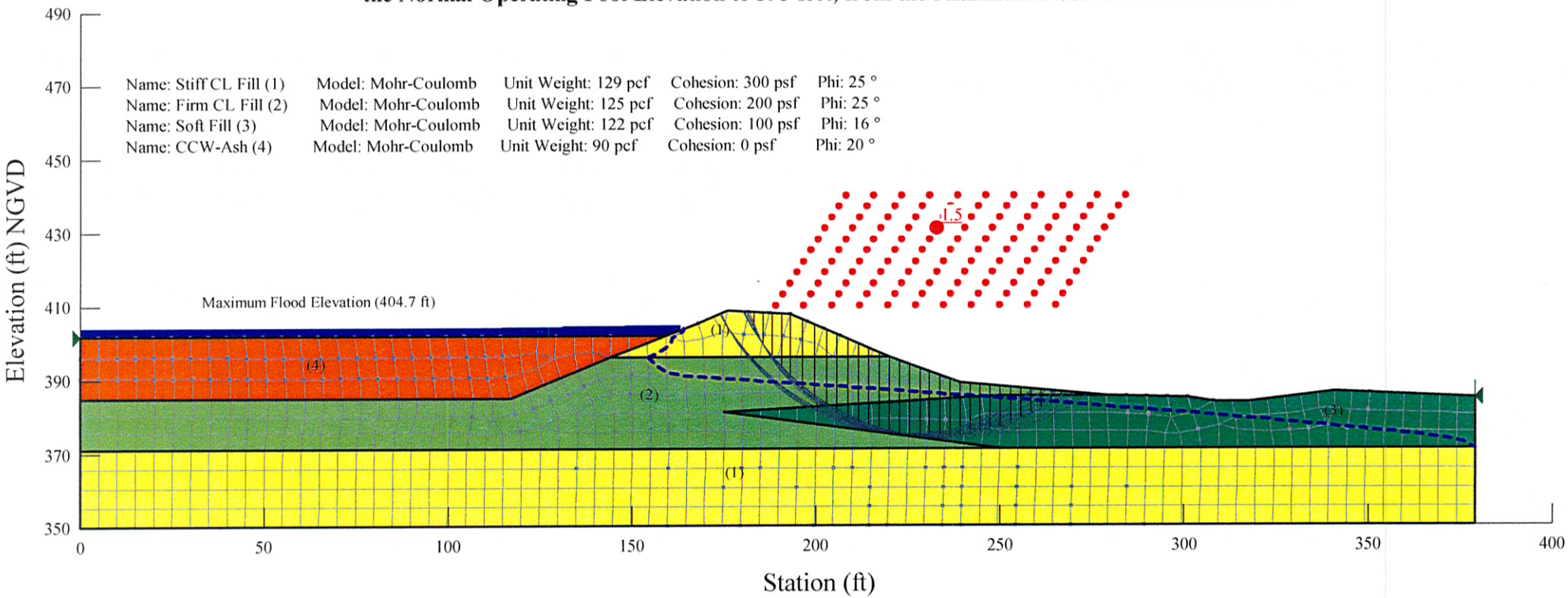

RESULTS:

SEISMIC STUDY

- **Section 1 (downstream)**
- **Section 1 with Rock buttress (downstream)**
- **Section 4 (upstream)**
- **Section 5 (upstream)**

Slope Stability (Steady State/Siesmic) Analysis for Section - 1 of the Coal Pile Run-off Pond
The Horizontal Ground Acceleration = 0.08g

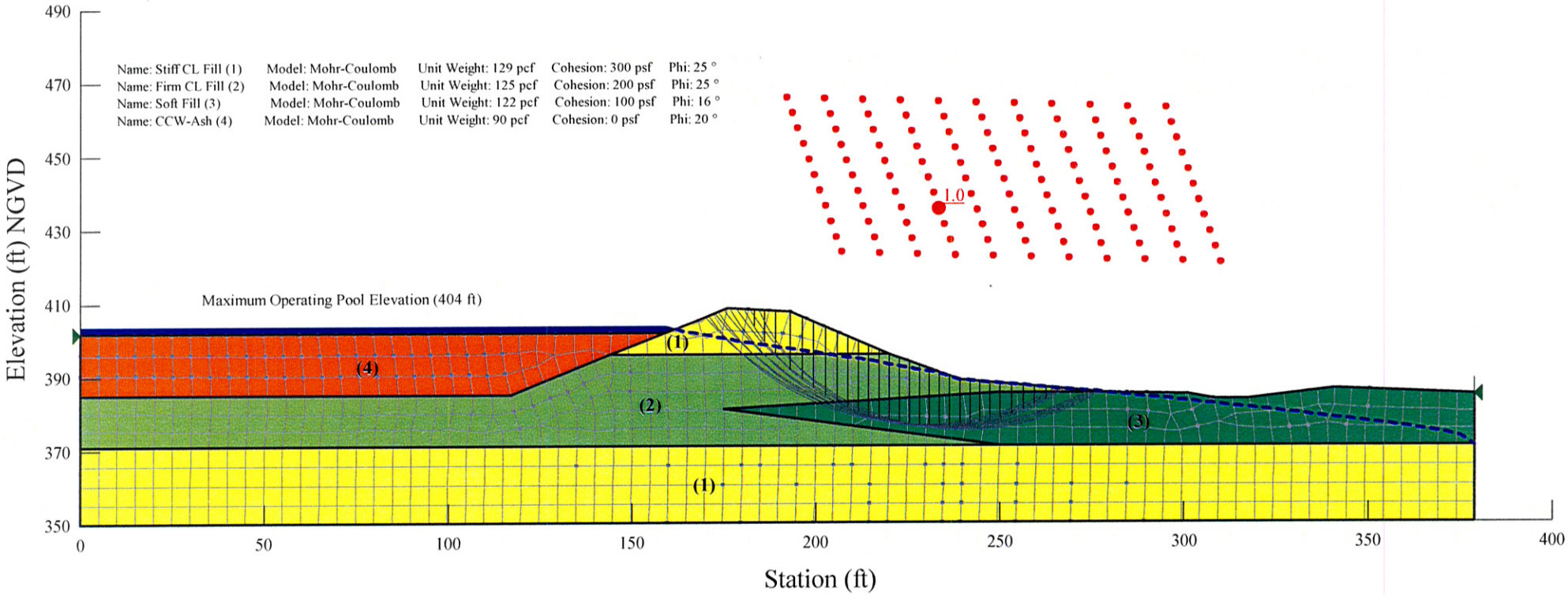

Slope Stability (Steady State/Seismic) Analysis for Section - 1 of the Coal Pile Run-off Pond with a Rock Buttress
The Horizontal Ground Acceleration = 0.10g

Name: Stiff CL Fill (1)	Model: Mohr-Coulomb	Unit Weight: 129 pcf	Cohesion: 300 psf	Phi: 25 °
Name: Firm CL Fill (2)	Model: Mohr-Coulomb	Unit Weight: 125 pcf	Cohesion: 200 psf	Phi: 25 °
Name: Soft Fill (3)	Model: Mohr-Coulomb	Unit Weight: 122 pcf	Cohesion: 100 psf	Phi: 16 °
Name: CCW-Ash (4)	Model: Mohr-Coulomb	Unit Weight: 90 pcf	Cohesion: 0 psf	Phi: 20 °
Name: Rock Buttress	Model: Mohr-Coulomb	Unit Weight: 145 pcf	Cohesion: 100 psf	Phi: 20 °

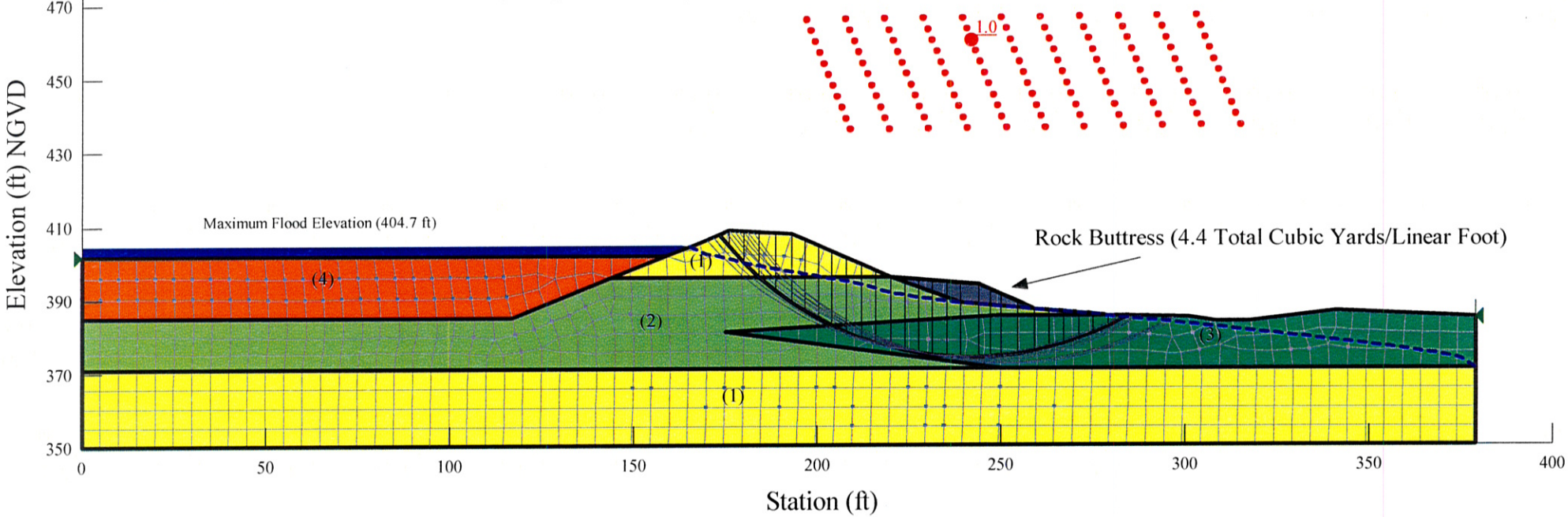

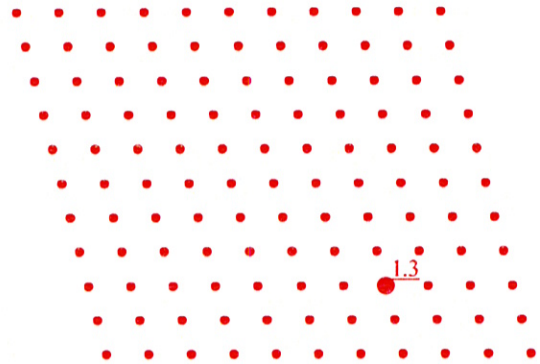

Slope Stability (Steady State/Siesmic) Analysis for Section - 4 of the Number 2 Pond
The Horizontal Ground Aceleration = 0.08g

Name: CL Fill (1)	Model: Mohr-Coulomb	Unit Weight: 122 pcf	Cohesion: 100 psf	Phi: 16 °
Name: CLF-all (2)	Model: Mohr-Coulomb	Unit Weight: 125 pcf	Cohesion: 300 psf	Phi: 25 °
Name: CCW-Ash (3)	Model: Mohr-Coulomb	Unit Weight: 90 pcf	Cohesion: 0 psf	Phi: 20 °
Name: Rip Rap (4)	Model: Mohr-Coulomb	Unit Weight: 140 pcf	Cohesion: 100 psf	Phi: 45 °

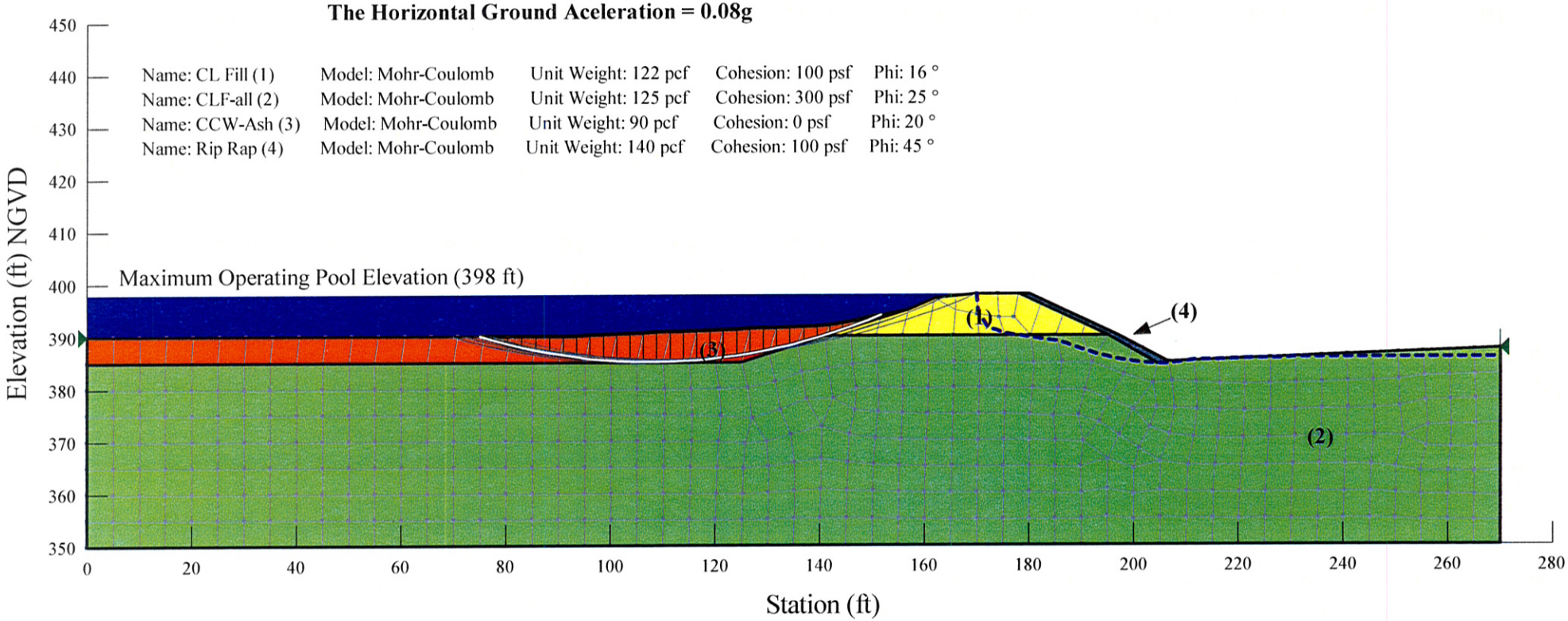
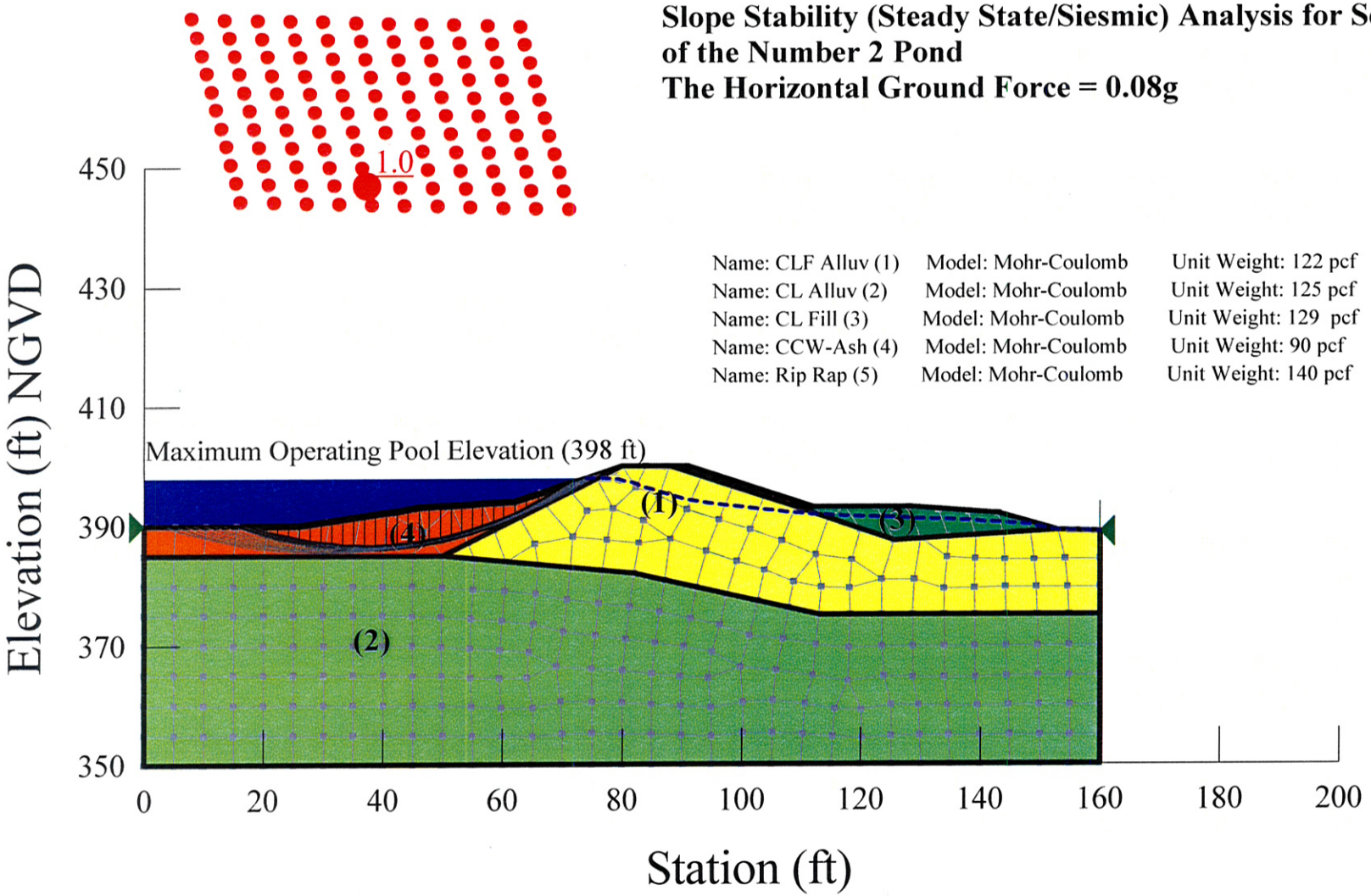
Slope Stability (Steady State/Siesmic) Analysis for Section - 5 of the Number 2 Pond
The Horizontal Ground Force = 0.08g