US EPA ARCHIVE DOCUMENT

EPA/625/R-93/011
October 1993

Radon Reduction Techniques for Existing Detached Houses

Technical Guidance (Third Edition) for Active Soil Depressurization Systems

D. Bruce Henschel

Air and Energy Engineering Research Laboratory
Office of Environmental Engineering and Technology Demonstration
Office of Research and Development
U.S. Environmental Protection Agency
Research Triangle Park, North Carolina 27711

Printed on Recycled Paper

US EPA ARCHIVE DOCUMENT

EPA Disclaimer Notice

The U.S. Environmental Protection Agency (EPA) strives to provide accurate, complete, and useful information. However, neither EPA nor any person contributing to the preparation of this document makes any warranty, expressed or implied, with respect to the usefulness or effectiveness of any information, method, or process disclosed in this material. Nor does EPA assume any liability for the use of, or for damages arising from the use of, any information, method, or process disclosed in this document.

Mention of firms, trade names, or commercial products in this document does not constitute endorsement or recommendation for use.

US EPA ARCHIVE DOCUMENT

US EPA ARCHIVE DOCUMENT

Preface

This technical guidance document has been prepared to serve as a comprehensive aid in the detailed selection, design, installation, and operation of indoor radon reduction measures for existing houses based on active soil depressurization techniques. It is intended for use by radon mitigation contractors, building contractors, concerned homeowners, state and local officials, and other interested persons.

This document is the third edition of EPA's technical guidance for indoor radon reduction techniques. This document addresses primarily radon reduction techniques based on active soil depressurization technology, which is one of the most widely used approaches for reducing radon in existing houses. The document also addresses active soil pressurization and passive soil depressurization techniques, because these less widely used techniques bear a number of similarities to active depressurization systems.

This edition incorporates additional and updated information on active soil depressurization techniques, reflecting new results and perspectives that have been obtained in this developing field since the second edition of EPA's technical guidance (EPA/625/5-87/019) was published in January 1988. Thus, this document should be viewed as replacing Section 5 ("Soil Ventilation") of the second edition.

This document does not provide guidance regarding indoor radon reduction techniques other than active soil depressurization (and active soil pressurization and passive soil depressurization). Persons interested in other techniques, including house ventilation, entry route sealing, house pressure adjustments, air cleaners, and well water treatment, are referred to the second edition of the technical guidance document.

Homeowners and occupants who are interested in a brief overview of the alternative radon reduction techniques available, and of the steps to follow in getting a radon reduction system installed in their home, are referred to the booklet entitled *Consumer's Guide to Radon Reduction,* EPA-402-K92-003. Copies of that booklet, and of the second and third editions of the detailed technical guidance document, can be obtained from the state agencies and the EPA regional offices listed in Section 15. Copies of the second and third editions of the technical guidance document can also be obtained from

ORD Publications Office
Center for Environmental Research Information
U.S. Environmental Protection Agency
26 West Martin Luther King Drive
Cincinnati, OH 45268-1072

Contents

Preface iii
Figures xi
Tables xiii
Acknowledgments xiv
Glossary xv
Metric Equivalents xxii

HOW TO USE THIS DOCUMENT H-1

1 Introduction 1
1.1 Purpose 1
1.2 Scope 2
1.3 Content 2
1.4 Reason for Focus on Active Soil Depressurization 3

2 Principles, Applicability, and Past Performance of Soil Depressurization Systems 5
2.1 Principles of Active Soil Depressurization 5
2.1.1 Active Sub-Slab Depressurization (SSD) 7
2.1.2 Active Sump/Drain-Tile Depressurization (Sump/DTD) 7
2.1.3 Active Drain-Tile Depressurization (Above-Grade/Dry-Well Discharge) 11
2.1.4 Active Block-Wall Depressurization (BWD) 13
2.1.5 Active Sub-Membrane Depressurization (SMD) in Crawl Spaces 13
2.2 Applicability of Active Soil Depressurization 18
2.2.1 Active Sub-Slab Depressurization 19
2.2.2 Active Sump/Drain-Tile Depressurization 20
2.2.3 Active Drain-Tile Depressurization (Above-Grade/Dry-Well Discharge) 21
2.2.4 Active Block-Wall Depressurization 22
2.2.5 Active Sub-Membrane Depressurization 23
2.3 Performance of Active Soil Depressurization Systems 24
2.3.1 Active Sub-Slab Depressurization 25
2.3.2 Active Sump/Drain-Tile Depressurization 37
2.3.3 Active Drain-Tile Depressurization (Above-Grade/Dry-Well Discharge) 41
2.3.4 Active Block-Wall Depressurization 44
2.3.5 Active Sub-Membrane Depressurization 52
2.4 Performance of Active Soil Pressurization Systems 64
2.4.1 Active Sub-Slab Pressurization 65
2.4.2 Active Block-Wall Pressurization 67
2.5 Performance of Passive Soil Depressurization Systems 67

US EPA ARCHIVE DOCUMENT

Contents (continued)

3 Pre-Mitigation Diagnostic Test Procedures for Soil Depressurization Systems 73
3.1 General 73
3.1.1 Purposes of Pre-Mitigation Diagnostics 73
3.1.2 Diagnostic Tests That Can Be Considered 73
3.2 Procedures for the Visual Survey 76
3.3 Procedures for Sub-Slab Suction Field Extension Measurements 81
3.3.1 Qualitative Assessment of Suction Field Extension 83
3.3.2 Quantitative Assessment of Suction Field Extension 88
3.4 Procedures for Radon Grab Sampling and Sniffing 92
3.5 Procedures for Other Types of Diagnostic Tests 98
3.5.1 Sub-Slab Flows 98
3.5.2 Well Water Radon Analysis 100
3.5.3 Measurements to Determine Significance of Building Materials as a Radon Source 101
3.5.4 Pressure Differential Measurements Across the House Shell 103
3.5.5 Blower Door Measurements 106
3.5.6 Tracer Gas Testing 107

4 Design and Installation of Active Sub-Slab Depressurization Systems 109
4.1 Selection of the Number of Suction Pipes 109
4.1.1 Houses Having Good Sub-Slab Communication 109
4.1.2 Houses Having Marginal or Poor Sub-Slab Communication 110
4.2 Selection of Suction Pipe Location 112
4.2.1 Houses Having Good Sub-Slab Communication 112
4.2.2 Houses Having Marginal or Poor Sub-Slab Communication 114
4.3 Selection of Suction Pipe Type and Diameter 115
4.3.1 Type of Suction Pipe 115
4.3.2 Diameter of Suction Pipe 116
4.4 Selection of the Suction Fan 118
4.4.1 Centrifugal In-Line Tubular Fans 120
4.4.2 In-Line Radial Blowers 123
4.4.3 High-Suction/Low-Flow Blowers 123
4.5 Installation of Suction Pipes Beneath the Slab 125
4.5.1 Vertical Pipe Installed Down Through Drilled Hole Indoors 125
4.5.2 Vertical Pipe Installed Down Through Large Hole Indoors (Large Sub-Slab Pit) 130
4.5.3 Vertical Pipe Installed Into Unused Sump Pit Indoors 134
4.5.4 Horizontal Pipe Installed Through Foundation Wall from Outdoors 134
4.5.5 Horizontal Pipe Installed Through Foundation Wall from Inside Basement 137
4.5.6 Suction Pipe Installed from Inside Garage 137
4.6 Design/Installation of the Piping Network and Fan 140
4.6.1 Suction Loss in the Piping Network 140
4.6.2 Considerations in Pipe Routing Between Suction Points and Fan 145
4.6.3 Considerations in Pipe Installation Between Suction Points and Fan 148

US EPA ARCHIVE DOCUMENT

Contents (continued)

4.6.4 Design and Installation of the Fan and Exhaust Piping—Interior Stacks 151
4.6.5 Design and Installation of the Fan and Exhaust Piping—Exterior and Garage Stacks 162
4.7 Slab Sealing in Conjunction with SSD Systems 176
4.7.1 Perimeter Channel Drains 177
4.7.2 Other Major Holes Through Slab 180
4.7.3 Untrapped Floor Drains Connected to the Soil 181
4.7.4 Sumps 181
4.7.5 Intermediate Openings Through the Slab 182
4.7.6 Openings in Block Foundation Walls 183
4.8 Gauges/Alarms and Labelling 183
4.8.1 Gauges and Alarms 184
4.8.2 System Labelling 185

5 Design and Installation of Active Drain-Tile Depressurization Systems (Sump Depressurization) 187
5.1 Selection of the Number of Suction Pipes: Need for a SSD Component to Sump/DTD System 187
5.2 Selection of DTD Suction Pipe Location: At Sump or Remote 188
5.3 Selection of Suction Pipe Type and Diameter 189
5.4 Selection of Suction Fan 190
5.5 Installation of a Suction Pipe into the Drain Tile Loop 190
5.5.1 Suction Drawn on Tiles Remote from Sump 190
5.5.2 Suction Drawn on Capped Sump 191
5.6 Design/Installation of the Piping Network and Fan 195
5.7 Slab Sealing in Conjunction with Sump/DTD Systems 195
5.8 Gauges/Alarms and Labelling 196

6 Design and Installation of Active Drain-Tile Depressurization Systems (Above-Grade/Dry-Well Discharge) 197
6.1 Selection of the Number of Suction Pipes: Need for a SSD Component to the DTD/Remote Discharge System 198
6.2 Selection of DTD Suction Pipe Location 199
6.3 Selection of Suction Pipe Type and Diameter 200
6.4 Selection of the Suction Fan 200
6.5 Installation of a Suction Pipe into the Drain Tiles 201
6.6 Design/Installation of the Piping Network and Fan 203
6.7 Slab Sealing in Conjunction with DTD/Remote Discharge Systems 204
6.8 Gauges/Alarms and Labelling 204

7 Design and Installation of Active Block-Wall Depressurization Systems 207
7.1 Selection of the Number of Suction Pipes 210
7.1.1 Individual-Pipe Variation 210
7.1.2 Baseboard Duct Variation 210

US EPA ARCHIVE DOCUMENT

Contents (continued)

7.2 Selection of Suction Pipe Location 211
7.2.1 Individual-Pipe Variation 211
7.2.2 Baseboard Duct Variation 213
7.3 Selection of Suction Pipe Type and Diameter 214
7.3.1 Individual-Pipe Variation 214
7.3.2 Baseboard Duct Variation 214
7.4 Selection of the Suction Fan 215
7.5 Installation of Suction Pipes Into the Block Walls 216
7.5.1 Individual-Pipe Variation 216
7.5.2 Baseboard Duct Variation 217
7.6 Design/Installation of the Piping Network and Fan 219
7.7 Wall and Slab Sealing in Conjunction with BWD Systems 220
7.7.1 Wall Openings 220
7.7.2 Slab Openings 223
7.8 Gauges/Alarms and Labelling 223

8 Design and Installation of Active Sub-Membrane Depressurization Systems 225
8.1 Selection of the Approach for Distributing Suction, and the Number of Suction Pipes 225
8.1.1 Approach for Distributing Suction 225
8.1.2 Number of Suction Pipes 227
8.2 Selection of Suction Pipe Location 228
8.2.1 Individual-Pipe/SMD Approach 228
8.2.2 Sub-Membrane Piping/SMD Approach 228
8.3 Selection of Suction Pipe Type and Diameter 229
8.3.1 Individual-Pipe/SMD Approach 229
8.3.2 Sub-Membrane Piping/SMD Approach 230
8.4 Selection of the Suction Fan 231
8.5 Installation of the Membrane and the Suction Pipes 232
8.5.1 Installation of the Membrane 232
8.5.2 Installation of the Suction Pipes 235
8.6 Design/Installation of the Piping Network and Fan 241
8.7 Sealing in Conjunction with SMD Systems 242
8.7.1 Sealing the Membrane 242
8.7.2 Sealing the Block Foundation Wall 242
8.8 Gauges/Alarms and Labelling 242

9 Considerations for Active Soil Pressurization Systems 245
9.1 Selection of the Number of Pressurization Pipes 245
9.1.1 Sub-Slab Systems 245
9.1.2 Block-Wall Systems 247
9.2 Selection of Pressurization Pipe Location 247
9.3 Selection of Pressurization Pipe Type and Diameter 247
9.4 Selection of Pressurization Fan 248

US EPA ARCHIVE DOCUMENT

Contents (continued)

9.5 Installation of Pressurization Pipes Beneath the Slab or Into the Block Walls 248
9.5.1 Sub-Slab Systems 248
9.5.2 Block-Wall Systems 249
9.6 Design/Installation of Piping Network and Fan 249
9.7 Sealing in Conjunction with Soil Pressurization Systems 251
9.8 Gauges/Alarms and Labelling 251

10 Considerations for Passive Soil Depressurization Systems 253
10.1 Selection of the Number of Suction Pipes 253
10.1.1 Passive SSD Systems 253
10.1.2 Passive DTD Systems 254
10.1.3 Passive SMD Systems 254
10.2 Selection of Suction Pipe Location 254
10.2.1 Passive SSD Systems 254
10.2.2 Passive DTD Systems 255
10.2.3 Passive SMD Systems 255
10.3 Selection of Suction Pipe Type and Diameter 256
10.4 Selection of a Supplemental Suction Fan 256
10.5 Installation of Suction Pipes 256
10.5.1 Passive SSD Systems 256
10.5.2 Passive DTD Systems 256
10.5.3 Passive SMD Systems 257
10.6 Design/Installation of Piping Network 257
10.7 Sealing in Conjunction with Passive Soil Depressurization Systems 259
10.8 Gauges/Alarms and Labelling 259

11 Post-Mitigation Diagnostic Test Procedures for Soil Depressurization Systems 261
11.1 General 261
11.1.1 Purposes of Post-Mitigation Diagnostics 261
11.1.2 Diagnostic Tests that Can Be Considered 261
11.2 Procedures for the Visual Inspection 263
11.3 Procedures for Suction (and Flow) Measurements in the System Piping 263
11.4 Procedures for Indoor Radon Measurements 265
11.4.1 Initial Short-Term Radon Measurement 265
11.4.2 Subsequent Radon Measurements 265
11.5 Procedures for Checking Combustion Appliance Backdrafting 265
11.5.1 Backdrafting Test Procedures for Mitigators 266
11.5.2 Backup Backdrafting Test Methods for House Occupants 268
11.5.3 Steps Required When Backdrafting Is Observed 268
11.6 Procedures for Suction Field Extension Measurements 269
11.6.1 Qualitative Check with Chemical Smoke 269
11.6.2 Quantitative Measurement with Micromanometer 270
11.7 Procedures for Radon Grab Sampling and Sniffing 272
11.8 Procedures for Chemical Smoke Flow Visualization Tests 273

US EPA ARCHIVE DOCUMENT

Contents (continued)

11.9 Procedures to Test for Exhaust Re-Entrainment 273
11.10 Procedures for Well Water Radon Analysis 274
11.11 Procedures to Determine the Significance of Building Materials as a Radon Source 274

12 Operation and Maintenance Requirements for Active Soil Depressurization Systems 275
12.1 Instructions Following Installation 275
12.2 Operating and Maintenance Requirements 275
12.2.1 System Fan 275
12.2.2 Piping Network, and System and Foundation Seals 277
12.2.3 Follow-Up Indoor Radon Measurements 278

13 Installation and Operating Costs for Active Soil Depressurization Systems 281
13.1 Sub-Slab Depressurization Costs 282
13.1.1 SSD Installation Costs 282
13.1.2 SSD Operating Costs 283
13.2 Sump/Drain-Tile Depressurization Costs 284
13.2.1 Sump/DTD Installation Costs 284
13.2.2 Sump/DTD Operating Costs 284
13.3 Drain-Tile Depressurization/Remote Discharge Costs 285
13.3.1 DTD/Remote Discharge Installation Costs 285
13.3.2 DTD/Remote Discharge Operating Costs 285
13.4 Block-Wall Depressurization Costs 285
13.4.1 BWD Installation Costs 285
13.4.2 BWD Operating Costs 286
13.5 Sub-Membrane Depressurization Costs 286
13.5.1 SMD Installation Costs 286
13.5.2 SMD Operating Costs 287
13.6 Active Soil Pressurization Costs 288
13.6.1 Soil Pressurization Installation Costs 288
13.6.2 Soil Pressurization Operating Costs 288
13.7 Passive Soil Depressurization Costs 288
13.7.1 Passive Soil Depressurization Installation Costs 288
13.7.2 Passive Soil Depressurization Operating Costs 289
13.8 Summary of ASD Installation and Operating Costs 289

14 References 291

15 Sources of Information 299

US EPA ARCHIVE DOCUMENT

Figures

H-1 A summary of the steps to be followed in using this document. H-2

1 Sub-slab depressurization (SSD) using pipes inserted down through the slab from indoors. 8

2 Sub-slab depressurization (SSD) using pipes inserted horizontally through the foundation wall from outdoors. 9

3 Drain-tile depressurization (DTD) where the tiles drain to a sump in the basement. 10

4 Drain-tile depressurization (DTD) where the tiles drain to an above-grade discharge remote from the house. 12

5 Block-wall depressurization (BWD) using the individual-pipe approach. 14

6 Sub-membrane depressurization (SMD) for the case where individual suction pipes penetrate the membrane (SSD analogue). 15

7 Sub-membrane depressurization (SMD) for the case where suction is drawn on perforated piping beneath the membrane (DTD analogue). 16

8 Example of a visual survey form. 77

9 Experimental configuration for quantitative pre-mitigation sub-slab suction field extension and flow diagnostics using a vacuum cleaner. 83

10 Example of siting vacuum cleaner suction hole and sub-slab suction test holes for quantitative suction field extension testing, when slab is fully finished. 89

11 Example of graphical interpretation of the results from quantitative suction field extension measurements. 91

12 Procedure for calculating sample radon concentrations from measured counts when using the alpha scintillation cell technique for grab sampling. 96

13 Suction loss per 100 linear ft of straight piping, as a function of gas volumetric flow rate and pipe diameter, for circular pipe having smooth walls. 117

14 Alternative approaches for installing the SSD suction pipe in the slab, in cases where the weight of the suction pipe is not supported at the slab penetration. 127

15 Alternative approaches for installing the SSD suction pipe in the slab, in cases where the weight of the suction pipe is supported at the slab penetration. 128

16 Some alternative approaches for supporting the weight of a suction pipe when there is a horizontal piping run, in cases where the pipe is not supported at the slab penetration. 131

17 Some alternative approaches for supporting the weight of a suction pipe when the pipe rises directly up through the overhead flooring with no horizontal run. 132

18 A typical configuration for treating an adjoining slab on grade using a horizontal suction pipe penetrating the stem wall from inside the basement. 138

19 One possible method for angling a suction pipe beneath the living-area slab of a slab-on-grade house, from inside an adjoining garage. 139

20 One representative SSD piping configuration illustrating an interior exhaust stack. 141

21 One representative SSD piping configuration illustrating an exterior exhaust stack. 142

22 Two of the alternative methods for providing proper drainage when a horizontal piping run must be routed over or under obstructions, creating low points in the piping. 147

Figures (continued)

23 A representative method for mounting a fan in the attic above an interior stack. 155

24 Some options for supporting a fan and exhaust piping in an attic in cases where there is no horizontal piping run in the attic. 157

25 Some alternative approaches that can sometimes be considered for wiring SSD fans mounted in attics. 159

26 Two possible configurations for vent caps on SSD stacks. 160

27 A representative method for mounting an exterior fan at the base of an exterior stack. 164

28 Some of the alternative methods for offsetting exterior stacks against the house. 167

29 Some alternative methods for supporting an exterior stack against the side of a house. 169

30 Options when an exterior stack reaches the roof overhang. 170

31 Some alternative methods for supporting exterior stacks where they are routed around a roof overhang. 171

32A Cross-section of a sealed perimeter channel drain, illustrating water drainage channels both above and below the seal. 178

32B Method for sealing the sump and the slab channel leading to the sump in cases where perimeter channel drains empty into a sump in the basement. 179

33 Some alternative sump cover designs (illustrated for the case where suction is being drawn at the sump). 193

34 Some approaches for connecting individual BWD suction pipes into a SSD system. 208

35 Block-wall depressurization (BWD) using the baseboard-duct approach. 209

36 One specific example of a baseboard duct BWD configuration with a major SSD component, for the case where a sump and sump pump are installed as part of the radon mitigation system. 218

37 Some options for closing major wall openings at the top of block foundation walls, in conjunction with BWD systems. 221

38 Some alternative approaches for increasing block wall treatment by a SMD system. 236

39 Some of the alternative approaches for installing individual SMD suction pipes through the membrane. 238

40 Sub-slab pressurization using one typical approach. 246

US EPA ARCHIVE DOCUMENT

Tables

1 Examples of In-Line Tubular Fans Which Have Been Marketed for Radon Mitigation 121

2 Performance Characteristics of Some In-Line Radial Blowers Being Marketed for Radon Reduction Systems 123

3 Performance Characteristics of Some High-Suction/Low-Flow Blowers Suitable for Radon Reduction Systems 124

4 Number of Feet of Straight Pipe Required to Create the Same Suction Loss As Created by the Flow Obstruction in One Fitting 143

5 Assumptions Used in Estimating Annual Operating Costs for ASD Systems 282

6 Summary of Installation and Operating Costs for ASD and Related Systems 290

7 Radon Contacts for Individual States 300

8 Radiation Contacts for EPA Regional Offices 303

US EPA ARCHIVE DOCUMENT

US EPA ARCHIVE DOCUMENT

Acknowledgments

These acknowledgments must begin by recognizing the contributions of the large number of researchers and mitigators who, through their efforts over the years, have defined the state of the art of radon mitigation technology. This manual is a documentation of the combined contributions of these many individuals. Many of these individuals are recognized through citations that appear in the list of references (Section 14), although it was not possible through this mechanism to acknowledge everyone who has aided in the advancement of this field.

Special recognition is given to several individuals who devoted particularly large amounts of time in reviewing the draft of this document and in providing consultation to help ensure that the manual rigorously reflects field experience around the U.S. These individuals include Terry M. Brennan of Camroden Associates, Inc., Oriskany, NY; William P. Brodhead of WPB Enterprises, Inc., Riegelsville, PA; Douglas L. Kladder and Steven R. Jelinek of Colorado Vintage Companies, Inc., Colorado Springs, CO; Marc Messing of Infiltec Radon Control, Falls Church, VA; and John W. Anderson, Jr., and Jack C. Bartholomew, Jr., of Quality Conservation, Spokane, WA.

Appreciation is also expressed to the large number of other individuals who reviewed the draft of the manual. Their comments have significantly improved the accuracy and completeness of this document. Of the reviewers outside of EPA, the author is particularly indebted to William J. Angell, Director of the Midwest Universities Radon Consortium, University of Minnesota; Richard S. Bainbridge of Aarden Testing; Kenneth J. Gadsby of Princeton University; David H. Saunders of the National Association of Home Builders Research Center; Arthur G. Scott of Arthur Scott and Associates; and Bradley H. Turk of Mountain West Technical Associates.

Of the reviewers within the Agency, particular appreciation is expressed to David J. Price and David M. Murane of the Radon Division, Office of Radiation and Indoor Air; and representatives of EPA's regional offices, especially Larainne G. Koehler of Region 2, Lewis K. Felleisen of Region 3, Paul Wagner of Region 4, James C. Benetti of Region 5, Stephen G. Chambers of Region 7, Philip C. Nyberg of Region 8, and David Holguin of Region 9.

The author also wishes to express particular appreciation to Frank T. Princiotta, Everett L. Plyler, Michael C. Osborne, and Timothy M. Dyess of EPA's Air and Energy Engineering Research Laboratory, for their technical input, guidance, and support throughout the preparation of this document.

US EPA ARCHIVE DOCUMENT

Glossary

ABS (acrylonitrile butadiene styrene)—A plastic that is resistant to deterioration (e.g., by soil chemicals), similar to PVC. ABS is used to make rigid piping that is commonly used; e.g., for residential sewer lines and for perforated drain tiles.

Active soil depressurization (ASD)—A class of techniques for reducing radon concentrations inside buildings. These techniques function by drawing radon-containing soil gas away from the foundation and exhausting it outdoors before it can enter the building.

Aggregate—As used here, aggregate refers to gravel or crushed rock that is placed beneath concrete slabs during construction to provide an even, well-supported base for the concrete and to provide a capillary break for moisture purposes. The term "gravel" may refer to crushed rock (e.g., pea gravel) or to naturally occurring material (e.g., river-run gravel). The presence of sub-slab aggregate often results in good sub-slab communication. The optimal aggregate from the standpoint of radon mitigation is clean, coarse aggregate, without substantial fine material to block the open spaces between the larger rocks.

The term "aggregate" is also sometimes used in some areas to refer to sand or sand/pebble mixtures, which can also be used to support slabs and provide a capillary break. However, in this document, the term is used only to refer to gravel or crushed rock.

Air changes per hour (ach)—The number of times within 1 hour that the volume of air inside a house would nominally be replaced, given the rate at which outdoor air is infiltrating the house. If a house has 1 ach, it means that all of the air in the house will be nominally replaced in a 1-hour period.

Alarm—As used here, a device that gives a visual or auditory signal (such as a light or a buzzer) when the suction in an ASD system moves outside the acceptable operating range for that system. An alarm may or may not also include a gauge to provide a reading of the actual suction in the system.

Alpha particles—A positively charged sub-atomic particle, comparable to the nucleus of a helium atom, emitted during decay of certain radioactive elements, such as radon and some of its progeny. The type of radiation responsible for the lung cancer risk associated with radon decay products. Many of the measurement devices used to detect radon are based on the detection of alpha particles.

Backdrafting (of combustion appliances)—A condition where the normal movement of combustion products up a flue, resulting from the buoyant forces on the hot gases, is reversed, so that the combustion products can enter the house. Backdrafting of combustion appliances (such as fireplaces and furnaces) can occur when depressurization in the house overwhelms the buoyant force on the hot gases. Backdrafting can also be caused by high air pressures at the chimney or flue termination.

Backer rod—A compressible, closed-cell polyethylene foam material, which is formed into ropes or cords of alternative diameters. Backer rod can be force-fit into wide cracks and similar openings to serve as a support for caulking material.

Band joist—Also called header joist, header plate, or rim joist. A board (typically 2 x 10 in.[1]) that rests (on its 2-in. dimension) on top of the sill plate around the perimeter of the house. The ends of the floor joists are nailed into the header joist that maintains spacing between the floor joists.

Baseboard duct—A continuous system of sheet metal or plastic channel ducting that is sealed over the joint between the wall and floor around the entire perimeter of the basement. Holes drilled into hollow blocks in the wall allow suction to be drawn on the walls and joint to remove radon through the ducts to a release point away from the inside of the house.

Basement—A type of house construction where the bottom livable level has a slab (or occasionally an earthen floor) that averages 3 ft or more below grade level on one or more sides of the house.

Block cavities, block voids—The air space(s) within concrete block or cinder block often used to construct foundation walls. The block cavities form an interconnected matrix within a finished wall.

Block-wall depressurization (BWD)—A variation of the ASD technology, where the system is attempting to depressurize the interconnected cavities inside the hollow-block foundation wall.

[1] Readers more familiar with metric units may use the equivalents listed at the end of the front matter.

US EPA ARCHIVE DOCUMENT

Glossary (continued)

Blower door—A device consisting of an instrumented fan that can be mounted in an existing doorway of a house. By determining the air flows through this fan required to achieve different degrees of house depressurization, the blower door permits determination of the tightness of the house shell, and an estimation of the natural filtration rate.

Chemical smoke—An inert fine powder, resembling smoke, which is released at selected locations during diagnostics in order to visualize the direction of air movement at those locations. Chemical smoke might be used, for example, to determine whether soil gas appears to be entering the house through selected openings in the slab. Chemical smoke can be dispensed from specially designed guns, bottles, or tubes, often by squeezing a rubber bulb on one end of the device or by squeezing the sides of the plastic bottle.

Cold air return—The registers and ducting that withdraw house air from various parts of the house and direct it to a central forced-air furnace or heat pump. The return ducting is at low pressure relative to the house because the central furnace fan draws air out of the house through this ducting.

Communication (as in "sub-slab communication")—A measure of how well openings beneath the slab (e.g., through porous gravel or soil under the slab) connect the sub-slab region, permitting suctions (or flows) generated at one point to extend to other points beneath the slab. Sub-slab communication is classified here in three categories: good, marginal, and poor. The concept of communication can also be applied to communication between the sub-slab region and the cavities in block foundation walls, communication beneath crawl-space membranes, etc.

Contractor (as in "radon contractor")—A building trades professional who works for profit to correct radon problems; a radon remediation expert. Also referred to as a radon mitigator. Through EPA's Radon Contractor Proficiency Program (RCPP), contractors can voluntarily demonstrate their proficiency. Some state radiological health offices also maintain lists of qualified professionals.

Convective movement—As used here, the bulk flow of radon-containing soil gas into the house as the result of pressure differences between the house and the soil. Distinguished from diffusive movement.

Coring drill—A large power drill that can cut circular cores (e.g., of 4- to 5-in. diameter) out of concrete slabs. Coring drills can be operated dry (e.g., with a carbide bit) or wet (e.g., with a diamond bit).

Crawl space—An area beneath the living space in some houses, where the floor of the lowest living area is elevated above grade level. This space (which generally provides only enough head room for a person to crawl in) is not living space but often contains utilities. Distinguished from slab-on-grade or basement construction.

Crawl-space depressurization—A radon reduction approach that has sometimes been applied to crawl-space houses, where an exhaust fan (blowing crawl-space air outdoors) causes the crawl space to become depressurized relative to the living area above. This approach prevents radon-containing crawl-space air from flowing up into the living area. Appears to be second only to SMD as an effective alternative for treating crawl-space houses.

Cubic feet per minute (cfm)—A measure of the volume of a fluid (measured in cubic feet) flowing within a fixed period of time (expressed in minutes).

Depressurization—In houses, a condition that exists when the air pressure inside the house is slightly lower than the air pressure outside or the soil gas pressure. The lower levels of houses are essentially always depressurized during cold weather because of the buoyant force on the warm indoor air (creating the natural thermal stack effect). Houses can also be depressurized by winds and by appliances that exhaust indoor air. ASD systems attempt to depressurize the soil (i.e., to reduce the soil gas pressure to a value lower than the pressure in the house).

Detached houses—Single family dwellings as opposed to apartments, duplexes, townhouses, or condominiums. Those dwellings that are typically occupied by one family unit and which do not share foundations and/or walls with other family dwellings.

Diagnostic testing—Tests conducted before or after the installation of a radon reduction system to aid in deciding which radon reduction technology to use, designing the selected system, or evaluating the reasons why an installed system is not performing as anticipated.

Diffusive movement—The random movement of individual atoms or molecules, such as radon atoms, in the absence of (or independent of) bulk (convective) gas flow. Atoms of radon can diffuse through tiny openings or even through unbroken concrete slabs. Distinguished from convective movement.

Drain tile—Perforated piping, usually constructed of flexible corrugated black high-density polyethylene or polypropylene, or of rigid ABS, PVC, or baked clay. Such tiles are buried beside the foundation of the house to collect water around the foundation and route it away from the foundation via a sump or a remote discharge.

Drain-tile depressurization (DTD)—A variation of the ASD technology, where the area around the foundation is depressurized by drawing suction on drain tiles.

Effective leakage area—A parameter determined from blower door testing, giving a measure of the tightness of the house shell. Conceptually, this leakage area reflects the square inches of open area through the house shell, through which air can infiltrate or exfiltrate.

Entry routes—Pathways by which soil gas can flow into a house. Openings through the flooring and walls where the house contacts the soil.

EPDM (ethylene propylene diene monomer; a terpolymer of that monomer)—A heavy rubberized membrane used for waterproofing flat roofs as a substitute for built-up tar-and-felt roofs. For SMD systems in crawl-space houses, EPDM is one logical material to be laid on top of the polyethylene sheeting along the routes of expected foot traffic within the crawl space to protect the polyethylene from being punctured.

Exfiltration—The movement of indoor air out of the house.

Exhaust fan—A fan oriented so that it blows indoor air out of the house. Exhaust fans cause outdoor air (and soil gas) to infiltrate at other locations in the house, to compensate for the exhausted air.

Expansion joint—A gap through a concrete slab, usually about 1/2-in. wide and filled with asphalt-impregnated fibrous material. In some regions, such joints are installed around the slab perimeter as the wall/floor joint. In other cases, they are installed across the middle of the slab (perpendicular to the front and rear walls). They are referred to as expansion joints because they would compress if the slab ever expanded. They would also reduce cracking if a segment of the slab shifted vertically relative to the foundation walls or relative to another segment of the slab.

Flowable caulk—Refers to caulks (often urethane caulks in this document) that are sufficiently fluid such that they tend to flow like a viscous liquid prior to curing. Flowable caulks have the advantage of flowing into cracks and irregularities in the opening being sealed, thus forming an effective seal.

Footing(s)—A concrete or stone base, supporting a foundation wall, that is used to distribute the weight of the house over the soil or subgrade underlying the house.

Forced-air furnace (or heat pump)—A central furnace or heat pump that functions by recirculating the house air through a heat exchanger in the furnace. A forced-air furnace is distinguished from a central hot-water space heating system or electric resistance heating.

Furring strip—A small strip of wood (usually 1- by 2-in. or 1- by 4-in.) that is commonly attached vertically to the interior of block or poured concrete foundation walls inside basements to support interior panelling being installed over the foundation walls; used in lieu of standard 2- by 4-in. studs. In radon mitigation, one occasional use of furring strips can be to attach the crawl-space membrane for SMD systems to the perimeter foundation wall.

Gamma meter—A portable, hand-held instrument that can be used to measure the rate of energy release by gamma radiation in microroentgens per hour.

Gamma radiation—Electromagnetic radiation released from the nucleus of some radionuclides during radioactive decay. Some gamma radiation, caused by radionuclides in the surrounding soil and rock and cosmic radiation from space, will exist in all houses. In infrequent cases, indoor gamma radiation can also result from building materials having elevated radionuclide concentrations.

Gauge—As used here, a device that provides a continuous, quantitative measurement of the suction within the piping of an ASD system. Gauges may or may not also be equipped with an alarm that provides a visual or auditory signal if the suction moves outside the acceptable range for the system.

Grade (above or below)—The term by which the level of the ground surrounding a house is known. In construction, grade typically refers to the surface of the ground. Structures can be located at grade, below grade, or above grade relative to the surface of the ground.

Ground fault interrupter switch—A switch that can be installed in the power cord leading to masonry drills that are being used to drill or core holes through concrete slabs. The switch is intended to reduce the risk of electrical shock to the workers by shutting off power to the drill if there were a power surge (e.g., if there were a short circuit in the drill) or if the bit hit an electrical conduit beneath the slab.

Heat exchanger—A device used to transfer heat from one stream to another. In air-to-air heat exchangers for residential use, heat from exhausted indoor air is transferred to incoming outdoor air, without mixing the two streams.

Heat recovery ventilators—Also known as air-to-air heater exchangers or heat exchangers.

Hollow-block wall, Block wall—A wall constructed using hollow rectangular masonry blocks. The blocks might be fabricated using a concrete base (concrete block) or using ash remaining after combustion of solid fuels (cinder block). Walls constructed using hollow blocks form an interconnected network with their interior hollow cavities. Foundation walls are most commonly constructed either of hollow block or of poured concrete, although other materials (such as fieldstone or wood) are sometimes also used.

US EPA ARCHIVE DOCUMENT

House air—Synonymous with indoor air. The air that occupies the space within a house.

Indoor air—That air that occupies the space within a house or other building.

Infiltration—The movement of outdoor air or soil gas into a house. The infiltration that occurs when all doors and windows are closed is referred to in this document as the natural closed-house infiltration rate. The reverse of exfiltration.

Installation costs—As used here, the cost to the homeowner of having an indoor radon reduction system installed in a house. If the system is installed by a professional mitigator, installation costs will include labor (including fringe benefits), materials, overhead, and profit.

Ionizing radiation—Any type of radiation capable of producing ionization in materials it contacts. Ionizing radiation includes high energy charged particles, such as alpha and beta particles, and non-particulate radiation, such as gamma rays and X-rays. By comparison, wave radiation, such as visible light and radio waves, does not ionize adjacent atoms.

Joist—Any of the parallel horizontal beams (commonly 2- by 10-in. boards) set from wall to wall to support the flooring for a living space or attic overhead. For example, joists in the basement ceiling will support the flooring for the first floor. If the basement has a plasterboard ceiling, the ceiling plasterboard will also be attached to these joists from underneath.

Load-bearing—A term referring to walls or other structures in a house that contribute to supporting the weight of the house.

Make-up air, Outdoor source of draft air (to address combustion appliance backdrafting)—As used here, an outdoor supply of fresh air into the house to provide the required draft air (and combustion air) needed for proper movement of products of combustion up the flues of combustion appliances. Such make-up air may be needed in cases where an ASD system is found to be creating backdrafting of combustion appliances through depressurization of the house. The term "make-up air" can also be used to describe the supply of outdoor air into the house in general, to prevent house depressurization by combustion appliances and exhaust fans, in cases where an ASD system has not been installed. "Make-up air" can also be used to refer to fresh air drawn into the cold air return of forced-air furnace systems to ventilate and perhaps even pressurize the house.

Manometer—A pressure-sensing device that displays pressure differences between two locations by the level of a colored liquid. Two types of such manometers (a U-tube and a curved inclined manometer) are commonly used as pressure gauges permanently mounted on ASD installations.

Magnehelic^{R} gauge—A pressure gauge manufactured by the Dwyer Instrument Co. that displays pressures on a calibrated face. Such gauges are sometimes used as permanently mounted pressure gauges on ASD installations.

Membrane—As used here, sheeting (commonly polyethylene) that is laid over the earthen or gravel floor of a crawl space as part of a sub-membrane depressurization system.

Micromanometer—A pressure-sensing device capable of detecting pressure differences as low as 0.001 in. WG. Commonly used in diagnostic testing; e.g., to assess sub-slab depressurizations created by a diagnostic vacuum cleaner or a SSD system.

Microroentgen—The roentgen (R) is a unit of measure of the total ionizing energy being produced by radiation in a unit mass of air. A microroentgen (μR) is 1 millionth (10^{-6}) of a roentgen. Gamma radiation is commonly measured in units of μR/hr; i.e., the rate at which ionizing energy is released by the gamma rays per mass of air.

Mitigator—See Contractor.

Non-flowable caulk, Gun-grade caulk—Refers to caulks that are sufficiently viscous such that the caulk bead will tend to retain its shape prior to curing. Distinguished from flowable caulks. Non-flowable caulks are less effective at settling into cracks and irregularities in the opening being sealed but are required in cases where the opening does not provide a channel to contain the fluid movement of the flowable caulks or where the opening is on a vertical surface.

Operating costs—The costs to the homeowner/occupant of continued operation of the radon reduction system. Operating costs include electricity to operate the ASD fan, the house heating/cooling penalty resulting from the exhaust of treated house air by the ASD system, system maintenance (such as occasional fan repair/replacement), and the costs for periodic follow-up radon measurements to ensure that the system is continuing to be effective.

Passive soil depressurization—Soil depressurization techniques that are analogous to ASD systems but which rely on natural phenomena (thermal and wind effects) rather than an active fan to develop the suction in the system. Passive suctions will be much lower than fan-developed suctions, and the performance of passive soil depressurization systems will always be lower, less reliable, and more variable than that for active systems.

US EPA ARCHIVE DOCUMENT

Glossary (continued)

PE (polyethylene)—A polymeric, plastic-like material similar to PVC. Rigid polyethylene piping is sometimes used in ASD system piping. Thin sheets of polyethylene (usually 6 to 10 mils thick) are commonly used as the membrane over the crawl-space floor for SMD systems.

Perimeter channel drain, Canal drain (sometimes referred to as a "French" drain)—A water drainage technique installed in basements of some houses during initial construction. If present, typically consists of a 1- or 2-in. gap between the basement block wall and the concrete floor slab around the entire perimeter inside the basement. This gap allows water seeping through block foundation walls or flowing from on top of the slab to drain into the fill beneath the slab. Often, this approach is utilizing the sub-slab fill as a dry well. Sometimes, an interior sub-slab drain tile loop (or, rarely, the channel drain itself) channels this water to a sump in the basement. The term "French drain" is sometimes also used to refer to a large gravel-filled dry well on the exterior of the house (rather than directly under the slab), which drains water away from the foundation; that is not the definition intended in this document.

Picocurie (pCi)—A unit of measurement of radioactivity. A curie is the amount of any radionuclide that undergoes exactly 3.7×10^{10} radioactive disintegrations per second. A picocurie is one trillionth (10^{-12}) of a curie, or 0.037 disintegrations per second.

Picocurie per liter (pCi/L)—A common unit of measurement of the concentration of radioactivity in a gas. A picocurie per liter corresponds to 0.037 radioactive disintegrations per second in every liter of air.

Plenum—A chamber into which air is forced, drawn, or collected, prior to distribution to other locations.

Polyethylene—see PE.

Post-mitigation—Refers to any steps taken following the installation of a radon reduction system in a house.

Poured concrete wall—A foundation wall constructed by pouring concrete within forms that are removed after construction. The most common alternative to hollow-block walls.

Pre-mitigation—Refers to any steps taken prior to the installation of a radon reduction system in a house.

P-trap—In plumbing applications, a horizontal section of piping containing a U-shaped dip at one end (resembling a horizontal letter "P") installed directly below drains. The intent is for water to stand in the U, creating a plug that prevents odors or vermin from the sewer from entering the house through the drain.

PVC (polyvinyl chloride)—A polymeric, plastic material that is resistant to deterioration (e.g., by soil chemicals) and is used in a wide variety of products. It is used to make rigid piping that is commonly used; e.g., in residential sewer lines, and as the piping for ASD systems. Flexible PVC couplings can be used to join sections of rigid PVC piping.

Radon—The only naturally occurring radioactive element that is a gas. Technically, the term "radon" can refer to any of a number of radioactive isotopes having atomic number 86. In this document, the term is used to refer specifically to the isotope radon-222, the primary isotope present inside houses. Radon-222 is directly created by the decay of radium-226 in the uranium decay chain, and has a half-life of 3.82 days. Another common isotope of radon (radon-220, also known as thoron) is a decay product of radium-224, in the thorium decay chain; thoron has a much shorter half-life (56 seconds) than does radon-222 and, hence, is generally not a serious problem inside houses. However, where high thorium concentrations exist in the soil very near the house or where high soil permeability permits rapid movement of the thoron into the house, thoron can sometimes be an important contributor to total radon concentrations.

Radon Contractor Proficiency Program (RCPP)—A voluntary program established by the U.S. Environmental Protection Agency through which a radon mitigator, by passing an examination and by meeting certain other requirements, can demonstrate proficiency in this field.

Radon decay products (or radon progeny)—The four radioactive elements that immediately follow radon-222 in the decay chain. These elements are polonium-218, lead-214, bismuth-214, and polonium-214. These elements have such short half-lives that they exist only in the presence of radon. The progeny are ultrafine solids that tend to adhere to other solids, including dust particles in the air and solid surfaces in a room. They adhere to lung tissue when inhaled; the two decay products that are alpha emitters (polonium-218 and polonium-214) can then bombard the tissue with alpha particles, thus creating the health risk associated with radon. Also referred to as radon daughters.

Re-entrainment—Used in this document to refer to the flow of ASD exhaust gases back into the house after they have been discharged outdoors. Re-entrained exhaust can prevent indoor radon concentrations from being reduced to the extent that would otherwise be possible by the ASD system. Discharge of the ASD exhaust above the house eave and away from openings in the house shell is intended to reduce (if not totally eliminate) re-entrainment.

Rotary hammer drill, Hammer drill—An electric power drill that includes a hammering motion in addition to the rotation of the drill bit, suitable for drilling through concrete. The hammering motion is created by metal-to-metal contact within the drill. These drills are smaller and less powerful than are electro-pneumatic roto-stop hammers.

Roto-stop hammer, Electro-pneumatic roto-stop hammer—A large electrically driven power drill that provides a hammering motion in addition to the rotation of the drill bit, and which is larger and more powerful than a rotary hammer drill. The hammering motion is created pneumatically, using compressed air generated by a compressor within the device. The hammer usually requires two hands to operate. The term "roto-stop" refers to the fact that the device can be adjusted to eliminate the rotary motion so that it can be used as a chisel or electric jackhammer.

Sealing—Measures to close openings through slabs, foundation walls, crawl-space membranes, or other parts of the house. Sealing can be intended to prevent soil gas from entering the structure through the particular opening or to prevent house air from leaking out through the opening (short-circuiting into an operating ASD system). "True" sealing would refer to a 100% airtight seal, preventing all convective air movement through the opening (and, usually, preventing diffusive radon movement as well). In practice, many seals will not be 100% effective at preventing convective and diffusive movement. To adequately reduce short-circuiting of house air into ASD systems, "true" seals are not necessary.

Sill plate—A horizontal band (typically 2 x 6 in.) that rests on top of a block or poured concrete foundation wall and extends around the entire perimeter of the house. The ends of the floor joists that support the floor above the foundation wall rest upon the sill plate.

Slab—A layer of concrete, typically about 4-in. thick, that commonly serves as the floor of any part of a house whenever the floor is in direct contact with the underlying soil.

Slab below grade—A type of house construction where the bottom floor is a slab that averages between 1 and 3 ft below grade level on one or more sides.

Slab on grade—A type of house construction where the bottom floor of a house is a slab that is no more than 1 ft below grade level on any side of the house.

Sniffing (to estimate radon concentrations)—A specific adaptation of grab sampling techniques for radon measurement, to obtain a rapid estimate of the radon concentration at potential entry routes (e.g., under slabs and inside block wall cavities). Relative to standard grab sampling, uses a much shorter counting time, and thus provides a less quantitative radon measurement. Most commonly used in pre-mitigation diagnostic testing.

Soil depressurization—Reducing the soil gas pressure (generally relative to the pressures inside a house), usually with the objective of preventing the convective flow of soil gas up into the house.

Soil gas—Gas that is always present underground in the small spaces between particles of the soil or in crevices in rock. Major constituents of soil gas include nitrogen and oxygen (from the outdoor air), water vapor, and carbon dioxide. Since radium-226 is essentially always present in the soil or rock, trace levels of radon-222 will exist in the soil gas.

Soil ventilation—Dilution of the soil gas with air drawn from elsewhere, usually from the outdoors or from inside the house. Such ventilation reduces the radon concentration in the soil gas, thus reducing the amount of radon that would enter the house when the soil gas enters. Note the significant distinction between "soil depressurization" and "soil ventilation." Sub-slab pressurization probably functions largely by a soil ventilation mechanism. SSD systems, while often functioning largely by a soil depressurization mechanism, may also have a true soil ventilation component.

Source term—Refers to the "strength" of the radon source in the soil and rock underlying a house. This strength is determined by the radium content of the soil and rock, the fraction of the radon that actually enters the soil gas when the radium decays, and the ease of soil gas movement through the soil toward the house. In this document, the term "source term" is often used to refer to the concentration of radon in the soil gas.

Stack effect—The upward movement of house air when the weather is cold caused by the buoyant force on the warm house air. House air leaks out at the upper levels of the house, and outdoor air (and soil gas) leaks in at the lower levels to compensate. The continuous exfiltration upstairs and infiltration downstairs maintain the stack effect air movement, so named because it is similar in principle to hot combustion gases rising up a fireplace or furnace flue stack.

Sub-membrane depressurization (SMD)—A variation of the ASD technology commonly applied to crawl-space houses, in which suction is drawn beneath a membrane that has been placed over the earthen or gravel crawl-space floor.

Sub-membrane piping—Perforated piping, like drain tile, that has been placed beneath the membrane of SMD systems to aid in the distribution of the suction field beneath the membrane.

US EPA ARCHIVE DOCUMENT

Sub-slab depressurization (SSD)—A variation of the ASD technology, where suction is drawn beneath the concrete slab in a basement, slab-on-grade, or slab-below-grade house.

Suction field extension—A measure of how well suction applied at one point (e.g., beneath the slab) extends to other parts of the sub-slab region.

Suction pipes—Pipes, usually PVC, ABS, or PE, which are installed (e.g., through slabs, walls, and membranes) in order to draw suction as part of an ASD system.

Sump—A pit through a basement floor slab, designed to collect water and thus avoid water problems in the basement. Water is often directed into the sump by drain tiles around the inside or outside of the footings.

Sump pump—A pump to move collected water out of the sump pit, to an above-grade discharge remote from the house. "Submersible" sump pumps are designed for operation with the entire unit near or below the water level in the sump, and the motors are thus designed to be corrosion-resistant. Submersible pumps are necessary any time the sump pit is to be covered as part of the radon mitigation system to resist rusting of the pump motor.

Tight house—A house with a low air exchange rate. If 0.5 to 0.9 ach is typical of modern housing, a tight house would be one with an exchange rate well below 0.5 ach.

Top voids—The air space in the top course of blocks in hollow-block foundation walls; that is, the course of block to which the sill plate is attached and on which the walls of the house rest.

Veneer, Brick veneer—A single layer of brick constructed on the exterior face of an outer wall of a house or other building (e.g., in lieu of wooden siding), to provide protection, insulation, and ornamentation. The brick veneer is securely attached to the load-bearing frame or masonry wall behind it, to prevent the brick from pulling away from the house. However, the veneer is not designed to support a load itself, other than the weight of the bricks.

Ventilation rate (of a house)—The rate at which outdoor air enters the house, displacing house air. The ventilation rate depends on the tightness of the house shell, weather conditions, and the operation of appliances (such as fans) influencing air movement. Commonly expressed in terms of air changes per hour, or cubic feet per minute.

Visual survey (of a house)—A mandatory component of pre-mitigation diagnostic testing. Involves inspection of the house to aid in the selection and design of the radon reduction measure.

Wall/floor joint—The junction between the slab (of a basement or slab-on-grade house) and the foundation walls. In many cases, this junction will be a small crack which is perhaps only a hairline crack, or it can be perhaps 1/16-in. wide. In other cases, where this joint is a perimeter channel drain, the gap will be 1 to 2 in. wide. In still other cases, the perimeter wall/floor joint may consist of an expansion joint (a 1/2-in.-wide gap filled with asphalt-impregnated fibrous material), usually to better accommodate any vertical shifting of the slab relative to the foundation walls. Where the slab and the footings/foundation wall have been poured as a monolithic pour, there may be no crack, other than potential settling cracks.

Warm air supply—The ducting and registers that direct heated house air from the forced-air furnace, to the various parts of the house. The supply ducting is at elevated pressure relative to the house because the central furnace fan is blowing air through this ducting.

Waterless trap—A trap, similar in function to the P-trap commonly used in plumbing applications but not requiring water in order to block sewer (or soil) gas from flowing up into the house via floor drains, etc. The trap is designed such that a weighted ball or ring seats in a manner to prevent gas entry, even if the water in the trap dries out. Very useful in sealing floor drains or providing a water path through sump covers in radon mitigation systems, in cases where water flow is likely to be so infrequent that a standard water trap might dry out. Marketed under the trade name Dranjer[R].

WG, in. WG—The term "WG" stands for "water gauge." Inches of water is a unit of measure of pressure (or suction); 1 in. of water pressure would be that pressure able to sustain the weight of a column of water 1 in. high. Atmospheric pressure (i.e., the pressure created on the surface of the earth by the weight of air in the atmosphere) is 33.9 ft, or about 407 in., of water at standard conditions. One inch of water gauge (1 in. WG) is the reading that would be provided by a pressure measurement device (a "gauge") if the pressure actually being measured by the device were 1 in. of water greater than atmospheric (i.e., if the absolute pressure being measured were 408 in. rather than 407 in. of water). Also expressed as WC ("water column").

Working level (WL)—A unit of measure of the exposure rate to radon and radon progeny defined as the quantity of short-lived progeny that will result in 1.3 x 10^5 MeV of potential alpha energy per liter of air. Exposures are measured in working level months (WLM); e.g., an exposure to 1 WL for 1 working month (170 hours) is 1 WLM. These units were developed originally to measure cumulative work place exposure of underground uranium miners to radon and continue to be used today as a measurement of human exposure to radon and radon decay products.

US EPA ARCHIVE DOCUMENT

Metric Equivalents

Although it is EPA's policy to use metric units in its documents, non-metric units are used in this report for the reader's convenience. Readers more accustomed to the metric system may use the following factors to convert to that system.

Non-metric	*Times*	*Yields metric*
mil (0.001 in.)	0.0254	millimeter (mm)
inch (in.)	2.54	centimeter (cm)
foot (ft)	30.5	centimeter (cm)
square foot (ft^2)	0.093	square meter (m^2)
cubic foot (ft^3)	28.3	liter (L)
gallon (gal)	3.78	liter (L)
cubic foot per minute (cfm, or ft^3/min)	0.47	liter per second (L/sec)
inch of water gauge (in. WG)	249	pascal (Pa)
degree Fahrenheit (°F)	5/9 (°F-32)	degree Centigrade (°C)
British thermal unit (Btu)	1,060	joule (J)
picocurie per liter (pCi/L)	37	Becquerel per cubic meter (Bq/m^3)
microroentgen (μR)	2.58×10^{-10}	coulomb per kilogram of air (C/kg)

US EPA ARCHIVE DOCUMENT

US EPA ARCHIVE DOCUMENT

How to Use This Document

This document has been designed as a comprehensive reference document that will most commonly be used by professional mitigators or by other persons interested in the detailed design and installation of indoor radon reduction systems for existing houses. As a result, the document is lengthy. Because of the tremendous amount of material to be covered, the discussion of the major individual steps in selecting, diagnosing, designing, and installing mitigation systems has necessarily been separated into different sections. The size of this document can complicate its effective use, especially by the first-time user.

This section is a step-by-step summary of how to use this document. To some extent, it is also an overview on how to go about selecting, designing, installing, and operating a radon reduction system for an existing house. The steps in this process are summarized in Figure H-1.

Many of the steps involved in this process will often be conducted by a professional mitigator. However, some steps (such as long-term operation of the system) will commonly be the responsibility of the homeowner or occupant.

Step 1. Determine that the house has a radon problem and initiate action to accomplish mitigation.

This step will be initiated or conducted by the homeowner, relocation firm, etc., prior to involvement by the mitigator.

1A. Measure radon levels in the house to determine whether there is a radon problem.

- Can be done by homeowner using charcoal or alpha-track detectors; or owner can have measurement done by a professional firm (using any one of a variety of measurement methods).
- Use EPA-recommended radon measurement protocols. See EPA 402-R-92-004 (Reference EPA92d) and EPA 402-R-92-003 (EPA93).
- A summary of these measurement protocols for homeowners is presented in *A Citizen's Guide to Radon*, EPA/402-K92-001 (EPA92a).

1B. Take temporary measures to reduce radon levels, prior to permanent mitigation, as warranted and as feasible.

- The homeowner/occupant can increase house ventilation and/or seal major soil gas entry routes, as temporary measures while awaiting the installation of the permanent mitigation system.
- Guidance for carrying out these temporary measures is provided in Section 2.3 on page 24 of the second edition of the *Technical Guidance*, EPA/625/5-87/019 (EPA88a). Guidance for identifying radon entry routes is provided in Section 2.2 (page 15) of the second edition.

1C. Arrange for permanent mitigation of the house.

- The homeowner, relocation firm, etc., will talk with one or more professional mitigators prior to selecting one to install a permanent mitigation system in the house.
- Owners should not consider installing a system on a do-it-yourself basis unless they feel fully conversant with the principles of mitigation and with the information in this manual.
- See Section 2.5.1 (page 41) of the second edition of *Technical Guidance*.
- For assistance in locating and selecting a mitigator, see the sources of information listed in **Section 15 of this document.**

US EPA ARCHIVE DOCUMENT

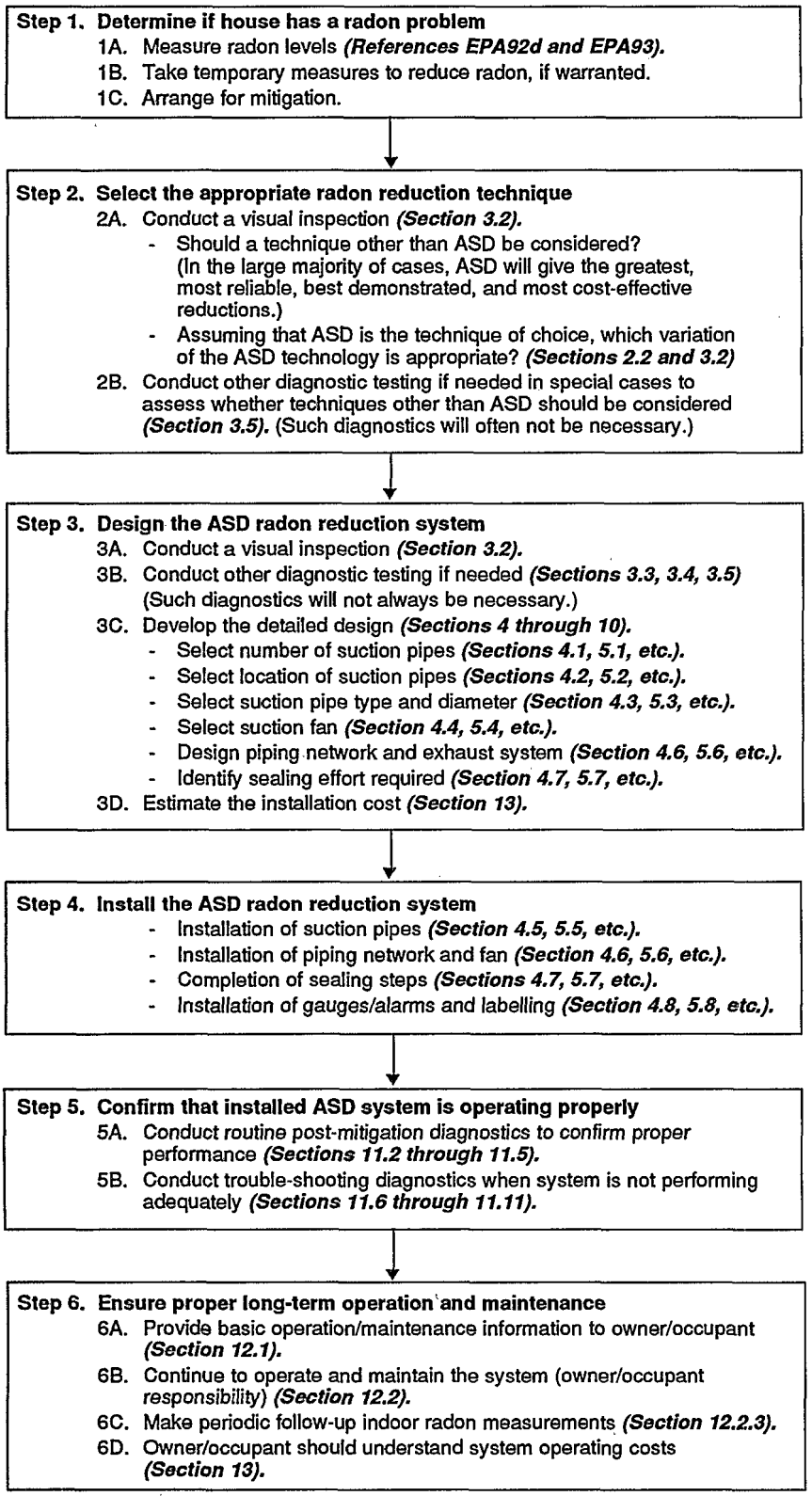

Figure H-1. A summary of the steps to be followed in using this document.

Step 2. Select the appropriate radon reduction technique for that house.

The selection of a mitigation system depends upon house characteristics and radon levels. In the majority of cases, professional mitigators will determine that the most efficient, reliable, and cost-effective radon reduction technique will be some suitable variation of the ***active soil depressurization (ASD)*** technology. But in some cases, other approaches can or should be considered.

2A. Conduct a visual inspection of the house, in accordance with Section 3.2 of this document.

- Are a combination of factors present that might complicate the application of ASD to that house?
  - Suspected poor sub-slab communication.
  - Fieldstone foundation walls.
  - Inaccessible crawl space.
  - Complex substructure.
  - High degree of finish.
  - Well water or building materials strongly suspected of being the radon source.
- Are factors present suggesting that specific other radon reduction approaches (other than ASD) might be candidates?
  - A tight basement, suggesting the possibility of applying ***basement pressurization;*** occupants whose life-style would be amenable to a basement pressurization approach.
  - A tight and/or inaccessible crawl space, suggesting the potential for applying ***crawl-space depressurization.***
  - Relatively low pre-mitigation radon concentrations, so that only perhaps 50% radon reduction is required, in which case a ***heat recovery ventilator*** might be considered.
  - Low pre-mitigation radon concentrations, combined with major soil gas entry routes, which might suggest that a stand-alone ***sealing*** approach could be considered.
  - Well-drained, gravelly, native soil, suggesting that ***active soil pressurization*** may be preferred over ASD.
  - Suspected high well water radon concentrations, suggesting that ***well water treatment*** may be needed instead of, or in addition to, ASD.
  - Suspected high-radium building materials contributing to indoor radon (rare in most places), in which case some type of barrier coating or source removal might be considered.
- If there are no factors ruling out ASD, which variation of the ASD technology is appropriate? (See **Section 2.2 of this document,** in addition to **Section 3.2).**
  - ***Sub-slab depressurization*** (SSD), preferred in almost all houses having slabs (i.e., basements and slabs on grade) where drain tiles are not present.
  - ***Drain-tile depressurization*** in cases where the tiles drain to a sump in the basement (sump/DTD); an alternative to SSD when a sump having drain tiles is present.
  - ***Drain-tile depressurization*** in cases where the tiles drain to an above-grade discharge or dry well (DTD/remote discharge); an alternative to SSD that can be considered when such tiles are present.
  - ***Block-wall depressurization*** (BWD), usually used only as a supplement to SSD, DTD, or SMD in cases where these other techniques do not adequately treat entry routes associated with the block walls.
  - ***Sub-membrane depressurization*** (SMD), the only ASD variation applicable in crawl-space houses having earth- or gravel-floored crawl spaces.

US EPA ARCHIVE DOCUMENT

US EPA ARCHIVE DOCUMENT

2B. Conduct any other pre-mitigation diagnostic testing required to enable final selection of the appropriate radon reduction approach for that house. (See appropriate portions of **Section 3 of this document.)**

In many cases, no diagnostic testing beyond the visual survey will be needed to make the final selection of the radon reduction technique.

- Blower door testing **(Section 3.5.5)** to determine if the basement is sufficiently tight to warrant practical consideration of ***basement pressurization.*** Basement pressurization is usually considered only when application of ASD is complicated (e.g., by poor sub-slab communication and/or by fieldstone foundation walls) and alternatives to ASD are thus being weighed.

- Blower door testing **(Section 3.5.5)** to determine if a crawl space is sufficiently tight to make ***crawl-space depressurization*** an effective alternative to SMD.

- Blower door testing **(Section 3.5.5)** to determine if the house is sufficiently tight to warrant practical consideration of a ***heat recovery ventilator*** to achieve the desired degree of radon reduction. (Usually conducted only where alternatives to ASD must be weighed; e.g., due to poor communication, fieldstone walls, and/or homeowner preference for an HRV.)

- Well water analysis **(Section 3.5.2)** to determine whether ***well water treatment*** should be considered as a supplement to, or replacement for, ASD in order to adequately reduce airborne radon concentrations. (Would usually be conducted only in cases where wells in the area have been observed to contain significantly elevated radon levels.)

- Gamma radiation measurements or flux measurements ***(Section 3.5.3)*** to determine whether building materials are a significant source of radon and, hence, whether barriers or source removal may be needed. (Often conducted only where local experience suggests that building materials may be a source.)

Step 3. Design the radon reduction technique for that house.

Since this document addresses only ASD, the following discussion focuses on the design of ASD systems. For the design of other radon reduction techniques, refer to the appropriate section of the second edition of *Technical Guidance*, EPA/625/5-87/019 (EPA88a).

3A. Conduct a visual inspection of the house, in accordance with **Section 3.2 of this document.**

The visual survey discussed in Step 2A above, in connection with selection of the reduction technique, will also provide most of the information needed for effective design of the ASD system. Often, this survey will be the only "pre-mitigation diagnostic testing" needed to design an ASD system.

- Factors that would influence the number and location of SSD suction pipes (e.g., observed sub-slab aggregate, house floor plan and finish, sub-slab utilities).

- Factors that would influence the design of a crawl-space SMD system (e.g., size of crawl space, nature of the crawl-space floor, accessibility).

- Factors that would influence the routing of the ASD exhaust piping (e.g., house finish, accessibility of an existing utility chase, presence or absence of an attic, location of an adjoining garage).

- Factors that would influence the degree of slab or wall sealing that would be required (e.g., the presence of a perimeter channel drain between the slab and the foundation wall).

- Driving forces for radon entry that might influence ASD design (i.e., major exhaust fans that could depressurize the house sufficiently to provide a major challenge to the system). See also Section 2.2 on page 15 of the second edition of *Technical Guidance*.

3B. Conduct any other pre-mitigation diagnostic testing needed to permit effective design of the ASD system. (See appropriate portions of **Section 3 of this document.)**

- If any pre-mitigation diagnostic test is required in addition to the visual survey, this test will most often be a ***qualitative assessment of sub-slab communication*** **(Section 3.3.1 of this document).**
  - Tells qualitatively whether sub-slab communication is good, marginal, or poor.
  - Is conducted primarily when visual evidence or other experience in the area provides no clue regarding the general nature of the sub-slab communication; i.e., whether the system is likely to need one SSD suction pipe or several.
- Other diagnostic tests to aid in ASD design (beyond the qualitative communication test) will often not be cost-effective for professional mitigators. These other tests include
  - Radon grab sampling or "sniffing" beneath the slab, inside block walls, and at suspected soil gas entry routes **(Section 3.4).**
  - Quantitative measurement of sub-slab communication **(Section 3.3.2).**
  - Quantitative measurement of the flows produced by the sub-slab region **(Section 3.5.1).**

3C. Develop the detailed design of the ASD system, using one of the following sections of this document:

- **Section 4** ***(for SSD systems)***
- **Section 5** ***(for sump/DTD systems)***
- **Section 6** ***(for DTD/remote discharge systems)***
- **Section 7** ***(for BWD systems)***
- **Section 8** ***(for crawl-space SMD systems)***
- **Section 9** ***(for active soil pressurization systems)***
- **Section 10** ***(for passive soil depressurization systems)***

The information base supporting the design guidance for the ASD systems in **Sections 4 through 8** is presented in **Section 2.3 of this document.** Data supporting the guidance for active pressurization systems are in **Section 2.4,** and for passive depressurization systems in **Section 2.5.**

- Guidance for selecting the ***number of suction pipes*** is presented in the first sub-section within Sections 4 through 10 (e.g., in **Section 4.1** for SSD systems).
- Guidance for selecting the ***location of the suction pipes*** is presented in the second sub-section (e.g., **Section 4.2**).
- Guidance for selecting the ***type and diameter*** of the suction pipes is presented in the third sub-section (e.g., **Section 4.3**).
- Guidance for selecting the ***suction fan*** is presented in the fourth sub-section (e.g., **Section 4.4**).
- Guidance for the design of the ***piping network and exhaust system*** is presented in the sixth sub-section (e.g., **Section 4.6**).
- Guidance for the design of the ***sealing effort*** required in conjunction with the ASD system is presented in the seventh sub-section (e.g., **Section 4.7**).

3D. Estimate the costs to install the designed ASD system.

- The cost for installation by a professional mitigator will depend on the house and mitigation system characteristics, the mitigator's practices, and the mitigator's labor rates (including fringe benefits), materials costs, overhead, and profit margin.
- Typical installation costs for each variation of the ASD technology are presented in **Section 13 of this document** (e.g., in **Section 13.1.1** for SSD systems, **Section 13.2.1** for sump/DTD systems, etc.).
  - ***See summary of installation costs for the alternative ASD variations in Table 6,*** **Section 13.8.**

US EPA ARCHIVE DOCUMENT

Step 4. Install the radon reduction system in that house.

Since this document addresses only ASD, the following discussion focuses on the installation of ASD systems. For installation of other radon reduction techniques, refer to the appropriate section of the second edition of *Technical Guidance* (EPA/625/5-87/019).

4A. Proceed with the installation of the system in accordance with the design, using the appropriate section of this document (Sections 4 through 10).

As with the design guidance in Step 3C above, the data base supporting this installation guidance is presented in **Sections 2.3, 2.4, and 2.5 of this document.**

- Guidance for ***installing the suction pipes*** in the slab, wall, or membrane is presented in the fifth sub-section within Sections 4 through 10 (e.g., in **Section 4.5** for SSD systems).
- Guidance for ***installing the piping network and the exhaust system*** is presented in the sixth sub-section (e.g., **Section 4.6**).
- Guidance for ***completing the sealing steps*** required in conjunction with the ASD system is presented in the seventh sub-section (e.g., **Section 4.7**).
- Guidance for ***installing gauges and/or alarms*** on the systems, and for ***labelling the system components***, is presented in the eighth sub-section (e.g., **Section 4.8**).

Step 5. Confirm that the installed system is operating properly.

5A. Conduct post-mitigation diagnostic tests that are required in all cases, even when the ASD system appears to be operating well, as described in Section 11 of this document.

- Complete a ***visual inspection of the installed system*** as a routine quality assurance step, as described in **Section 11.2**, to confirm that all details have been completed properly.
- Measure ***suction (and possibly flow) in the system piping***, a step that can be completed while a pressure gauge is being installed in the system piping. See **Section 11.3**.
- Measure the ***indoor radon concentrations*** achieved by the system since this is the real measure of system performance, as described in **Section 11.4.**
  - Complete a short-term radon measurement within 30 days after system installation or ensure that the homeowner/occupant completes such a measurement (**Section 11.4.1**).
  - Recommend that the owner/occupant also make a long-term radon measurement (**Section 11.4.2**).
- Test for ***combustion appliance backdrafting***, as described in **Section 11.5.**

5B. Conduct post-mitigation diagnostic tests on a trouble-shooting basis, to determine how a system that is not performing adequately can be improved.

- Conduct ***suction field extension*** measurements beneath the slab, inside the block wall, or beneath the SMD membrane (**Section 11.6).**
  - Probably the most effective and most commonly used post-mitigation diagnostic when ASD systems do not perform well.
  - Most common reason for inadequate performance is that suction field is not extending adequately.
- Conduct ***radon grab sampling or "sniffing"*** measurements (**Section 11.7**).
  - Can be used to assess the relative importance of alternative potential entry routes.
  - As one specific example, high residual radon concentrations inside an individual block foundation wall in houses having a SSD, DTD, or SMD system could suggest that a BWD component should be added to the system to treat that wall.

US EPA ARCHIVE DOCUMENT

- Conduct ***chemical smoke flow visualization tests***, as described in **Section 11.8**, to help identify potential entry routes not being adequately depressurized.

- Conduct ***well water radon analyses*** or ***gamma surveys to assess building materials as a radon source***, as discussed in **Sections 11.10 and 11.11**, if these tests were not conducted prior to mitigation and if all other possible reasons for elevated residual post-mitigation radon levels have been eliminated.

Step 6. Ensure proper long-term operation and maintenance of the ASD system.

6A. Provide the homeowner/occupant with information to help ensure proper operation and maintenance of the system (Section 12.1).

This step is the responsibility of the professional mitigator.

- According to EPA's interim mitigation standards (Reference EPA91b), the owner/occupant shall be provided with the following information.
  - A description of the system, at a central label.
  - The system characteristics representative of proper operation (e.g., the proper range of readings that can be expected on any pressure gauge mounted on the system piping).
  - The name and telephone number of the mitigator, to contact if the system stops performing properly.
  - A statement indicating any required maintenance by the owner/occupant.
- Other information that might be provided, depending on the mitigator's practice, includes
  - Copies of warranties and manufacturer's brochures.
  - The operating principles of the system.
  - Corrective action that can be taken if the system operation ever moves outside the acceptable range (including steps the occupant can take directly prior to calling a professional mitigator for repairs).

6B. Continue to operate and maintain the system properly.

This step is the responsibility of the homeowner or occupant.

- Ensure continued proper operation of the system fan **(Section 12.2.1 of this document).**
  - When the house is occupied, do not turn the fan off or down to a lower power setting than that at which it was left by the mitigator.
  - Best radon reduction performance is obtained when the fans are operated at full power.
  - Take appropriate action if the suctions in the system piping, as indicated on a gauge, fall below (or rise above) the acceptable range marked on the gauge by the mitigator; or, if there is no gauge, if a system alarm or some other indicator suggests that the system may not be operating properly. ***(See specific procedures in*** **Section 12.2.1.)**
  - A professional mitigator may have to be called in to make repairs.
  - There are some simple diagnostic steps the owner or occupant can take directly prior to calling a mitigator.
  - At some interval (4 to 10 years), the fan will have to be repaired or replaced.
- Periodically inspect the system piping in an effort to ensure that blockage by ice or moisture does not occur **(see Section 12.2.2).**
- Periodically inspect seals in the system piping, and seals that were installed in the house foundation as part of the mitigation system (Section 12.2.2).

US EPA ARCHIVE DOCUMENT

- Repair seals as necessary.

- With crawl-space SMD systems, "seal repair" may involve occasional major repairs or replacement of membrane.

6C. Make periodic follow-up indoor radon measurements to confirm that the mitigation system is continuing to perform adequately **(Sections 12.2.3 and 13.1.2).**

- EPA recommends re-testing at least once every 2 years.

  - Can be done directly by homeowner/occupant using a charcoal or alpha-track detector; or, a professional measurement firm could be hired.

  - Measurement should be made in frequently occupied part of house.

  - Long-term measurement (e.g., with alpha-track detector) is probably advisable unless some recent apparent change in system performance warrants a more rapid measurement (e.g., using a charcoal detector).

- Measurements more frequent than once every 2 years are advisable if there is any apparent change in system performance (e.g., a change in system suctions) or if the house has been modified.

6D. EPA recommends that the owner/occupant be advised of the annual operating costs associated with operation and maintenance of the ASD system **(Section 13).**

- The operating costs consist of four elements:

  - The electricity to operate the fan.

  - The house heating/cooling penalty, resulting from treated house air being exhausted by the system.

  - The cost of system maintenance (repair/replacement of fans on all ASD systems, repair of seals, and occasional major repair/replacement of membrane for crawl-space SMD systems).

  - The cost of periodic follow-up indoor radon measurements.

- ***The range of values for these operating costs are summarized in Table 6 in*** **Section 13.8,** ***for the alternative ASD variations.***

US EPA ARCHIVE DOCUMENT

US EPA ARCHIVE DOCUMENT

Section 1
Introduction

1.1 Purpose

This technical guidance document is designed to aid in the selection, design, and operation of indoor radon reduction techniques using soil depressurization in existing houses. In particular, it draws from the experience of numerous researchers and radon mitigators over the past eight years and distills this information into practical guidance. The guidance should enable the design, installation, and evaluation of soil depressurization systems with increased confidence, with reduced system costs, and/or improved system performance, under a variety of conditions.

As the term is used here, "guidance" represents a recommendation of what EPA considers to be a reasonable course of action for a given set of conditions, based on experience to date. Often, alternative reasonable courses of action are possible. Where this situation occurs, this document attempts to provide readers with sufficient background to permit an informed decision for their specific sets of circumstances. A mitigator will sometimes face special circumstances where the guidance in this document might not represent the preferred approach in that specific case; a careful, informed judgement of the necessary approach must be made in such special cases. Following the EPA guidance will not, in all cases, guarantee a fully successful mitigation system. However, by effectively drawing upon the prior experience, use of the guidance should reduce the risk of installing an unsuccessful system and should facilitate making the subsequent modifications needed to achieve success.

The term "guidance" must be distinguished from the term "standard." Guidance is a recommendation of what generally appears to be good practice. In many cases here, the guidance is a recommendation of multiple alternative courses of action that appear reasonable, from among which the user can choose. Users of this document have the option of following these recommendations or of using a different approach where warranted by their particular circumstances.

By comparison, standards are prescribed procedures or requirements which must be met. As discussed later, EPA has issued interim standards and is in the process of developing final standards that radon mitigation contractors must follow if they wish to be listed under the Agency's Radon Contractor Proficiency Program (RCPP). Many of these standards are mentioned at appropriate locations in this document. Where individual standards are mentioned, the text clearly indicates which features are standards (and are thus considered mandatory for RCPP-listed mitigators) and which features are guidance (and are thus subject to the judgement of the user).

This document updates and replaces Section 5 (Soil Ventilation) of the second edition of EPA's *Technical Guidance* (EPA88a). Other EPA publications providing information on indoor radon reduction in houses include

- *Consumer's Guide to Radon Reduction* (EPA92c), a booklet which provides a concise overview for homeowners of alternative radon reduction techniques.

- *Application of Radon Reduction Methods* (EPA89a), which is intended to direct a user through the steps of diagnosing a radon problem, selecting a reduction method, and designing/installing/operating a radon reduction system in existing houses, with less detail than is presented in the technical guidance documents.

- *Radon Contractor Proficiency Program Interim Radon Mitigation Standards* (EPA91b), which list the criteria that commercial mitigators are expected to meet if they are listed as proficient under the RCPP. Final radon mitigation standards, which will replace the interim standards, are currently in preparation.

- *Radon Reduction in New Construction: An Interim Guide* (EPA87a), a brochure summarizing features that can be incorporated into a house during construction to reduce indoor radon levels.

- *Radon-Resistant Construction Techniques for New Residential Construction: Technical Guidance* (EPA91a), EPA's technical guidance document specifically for radon reduction in houses during construction.

Further information on the indoor radon problem in general can be obtained from the following EPA publications, among others:

- *A Citizen's Guide to Radon (Second Edition)* (EPA92a), a booklet providing background concerning radon and summarizing health risks, measurement methods, and reduction approaches.

- *Technical Support Document for the Second Edition of the Citizen's Guide to Radon* (EPA92b); this support document provides the information supporting the guidance in the *Citizen's Guide*.

- *Radon Reference Manual* (EPA87b), which provides additional background information on indoor radon (e.g., nature and origin, health effects, geographic distribution, and measurement).

1.2 Scope

This technical guidance document addresses the design, installation, and operation of soil depressurization systems for radon reduction in existing houses. Alternative radon reduction methods, including structure ventilation, sealing of entry routes, structure pressure adjustments, air cleaning, and well water treatment, are not addressed here. Until the third edition of the *Technical Guidance* is expanded in the future to update these other reduction methods, readers interested in these other methods are referred to the second edition.

The emphasis in this document is on *active* soil *de*pressurization, i.e., on systems which use a fan to depressurize the soil. However, active soil *pressurization*, where the system fan is reversed to blow outdoor air into the soil, is covered in Section 9. In addition, *passive* soil depressurization is also addressed in Section 10; with passive systems, natural phenomena, including the indoor vs. outdoor temperatures and the flow of winds over the roof-line, are relied upon to provide the depressurization instead of a fan.

This document focuses on the retrofit of radon reduction methods into *existing* houses as distinguished from the incorporation or radon-resistant features into new houses during construction. Separate guidance has been issued on the subject of new construction (EPA87a, EPA91a). The soil depressurization methods described in this document will be generally applicable to new construction. However, incorporation of reduction methods during the construction phase permits certain house construction features to be modified to improve system performance. Thus, the approach to system design and installation and the utilization of other reduction approaches (such as sealing) can be quite different for new construction relative to retrofit into existing houses.

As reflected by the title, this document focuses on detached houses, as distinguished from multi-family dwellings (apartments, condominiums) and from large buildings, such as schools and commercial buildings. Separate technical guidance has been issued for school buildings (EPA89b). The active soil depressurization methods described in this document will be generally applicable to these other types of buildings. However, because of the size and of some important differences in construction methods used in these larger buildings, the approach used in system design and installation of the soil depressurization system can be different. Moreover, other reduction approaches (such as building pressure adjustment through modifications to the ventilation system) can more often play a role in these large buildings.

As discussed in Section 2.1, this document addresses all variations of the soil depressurization approach, including sub-slab depressurization, drain-tile depressurization, block-wall depressurization, and sub-membrane depressurization in crawl spaces. One or more of these variations can be applied to each of the house substructure types (basements, slabs on grade, crawl spaces, and combinations of these). These techniques can be applied to address essentially any pre-mitigation radon concentration, from extremely elevated to only slightly elevated.

Soil depressurization techniques can treat only that radon entering the house as a component of soil gas. Thus, this document addresses only those cases where the radon problem is due to naturally occurring uranium/radium in the underlying soil and rock or to contaminated fill underneath the house (e.g., uranium mill tailings). Soil depressurization techniques cannot treat cases where the airborne radon in the house enters with the well water or emanates from the building materials (due to, for example, contaminated aggregate used in the concrete).

1.3 Content

This document consists of five major elements.

1. General information on soil depressurization technology, including the principles involved with each variation of soil depressurization (Section 2.1) and the conditions under which each variation is particularly applicable or inapplicable (Section 2.2). This information also includes a detailed summary of the available data demonstrating the performance of each variation as a function of the range of house design, house operation, system design, system operation, and geology/climate variables (Sections 2.3, 2.4, and 2.5).

2. A description of the diagnostic test procedures that can be used prior to mitigation to enable cost-effective design and installation of systems. See Section 3. Procedures are described for the full range of possible pre-mitigation diagnostic tests. Emphasis is placed on the three pre-mitigation diagnostic tests most commonly found to be cost-effective in aiding the design of soil depressurization systems: a visual survey of the house; sub-slab suction field extension measurements; and radon grab sampling and sniffing.

3. Detailed guidance on the design and installation of each variation of the soil depressurization technique. This detailed guidance is included in Sections 4 through 8, with one section devoted to each of the soil depressurization variations. Guidance on design and installation of active soil pressurization and of passive soil depressurization—to the extent possible, given the much more limited experience with these two approaches—is presented in Sections 9 and 10, respectively.

4. A description of the diagnostic test procedures that should be used following installation of a system to ensure that the system is operating properly and/or to diagnose the cause of the problem if it is not performing adequately. See Section 11.

5. A description of system operation and maintenance requirements (Section 12).

US EPA ARCHIVE DOCUMENT

In addition, estimated installation and operating cost ranges for these systems are presented in Section 13. These cost ranges should be inclusive of most, but not all, of the soil depressurization installations throughout the continental U.S., in 1991 dollars.

1.4 Reason for Focus on Active Soil Depressurization

This revision to the second edition of EPA's *Technical Guidance* focuses on active soil depressurization for two reasons.

1. Active soil depressurization is the most consistently effective radon reduction method in existing houses, and is the technique most widely used by commercial mitigators.

   Active soil depressurization systems have consistently been found to provide high indoor radon reductions with good reliability. Most commercial mitigators appear to include active soil depressurization as the central component in most of their installations, especially when reductions greater than perhaps 50% are required. By comparison, the other mitigation approaches—house or crawl-space ventilation (with or without heat recovery), entry route sealing, house pressurization (or crawl-space pressurization or depressurization), and indoor air cleaners—have each been found to be distinctly less effective and/or less reliable than active soil depressurization. In addition, some of these techniques offer other drawbacks—e.g., a potential impact on occupant comfort and life-style in the case of house pressurization and uncertainty regarding the actual effect on health risk in the case of some of the particle-removal based air cleaners. In part for those reasons, these other techniques are less well demonstrated than is active soil depressurization. Many of these other techniques offer little, if any, reduction in installation or operating cost relative to active soil depressurization. These other techniques are most commonly used

   a) by homeowners on a do-it-yourself basis. Some of these techniques can sometimes be implemented easily without special skills, and some of them are relatively inexpensive when a mitigator's labor costs do not have to be incurred.

   b) by mitigators, either in conjunction with active soil depressurization or in circumstances where active soil depressurization is not applicable.

2. The available data for active soil depressurization has increased the most significantly since the second edition was published in 1988; hence, it is for this technique that the most significant improvements in technical guidance can be provided.

This document includes sections on active soil *pressurization* and on *passive* soil depressurization, as well as on active soil depressurization. The pressurization and passive techniques are included here because they each have certain similarities to active soil depressurization, and because this technical guidance document thus provides the most appropriate context in which to present these techniques. However, it must be recognized that

- Pressurization and passive techniques are far less well demonstrated than is active soil depressurization; hence, less rigorous technical guidance can be provided for these other techniques, and the guidance that is presented here is less well supported.

- Passive soil depressurization techniques will always be less effective than active soil depressurization. The effectiveness of passive soil depressurization techniques in existing houses is unpredictable, highly variable, and often moderate, at best. Passive systems will likely find their greatest application in new construction, where features can be incorporated into the house during construction to help improve passive performance.

- Although active soil pressurization techniques will occasionally provide greater radon reductions than does active soil depressurization in a given house (usually where the underlying native soil is highly permeable), these occasions appear to be fairly infrequent.

US EPA ARCHIVE DOCUMENT

US EPA ARCHIVE DOCUMENT

Section 2
Principles, Applicability, and Past Performance of Soil Depressurization Systems

2.1 Principles of Active Soil Depressurization

The general principle of soil depressurization is to draw radon-containing soil gas away from the house foundation before it can enter and to exhaust this soil gas outdoors. Where a fan is used to create the necessary suction, the approach is referred to as *active* soil depressurization (ASD). The vast majority of soil depressurization systems that have been installed are ASD systems.

There are several common variations of the ASD process. For the purposes of this document, these variations are defined as follows:

- Sub-slab depressurization (SSD). One or more suction pipes are inserted into the aggregate or soil beneath a concrete slab (either vertically down through the slab from the space above, or horizontally through a foundation wall below slab level, from outdoors or from inside an adjoining basement). Suction is then drawn on these pipes using the fan, with the collected soil gas then vented outdoors.

- Drain-tile depressurization (DTD). Some houses have a loop of perforated drain tile immediately beside the footing, either inside or outside the footing, for water drainage purposes. The nature of the DTD system depends on how the drain tiles have been designed to direct the water away from the house:

  -- where the tiles drain to a sump inside a basement, the sump is capped, and the fan draws suction on the sump/drain tile network (referred to as "sump/DTD");

  -- where the tiles drain to an above-grade discharge at a low spot on the lot or to a dry well, the tile loop is tapped into at an appropriate point outdoors, and the fan connected to depressurize the loop (referred to as "DTD/remote discharge").

- Block-wall depressurization (BWD). One or more individual suction pipes are inserted into the void network within a block foundation wall and connected to the fan. Alternatively, in what is referred to as the "baseboard duct" approach, a series of holes is drilled into the void network around the perimeter of a basement, just above slab level; these holes are then enclosed within a plenum ("baseboard") sealed to the wall and slab around the perimeter, and the plenum is connected to a fan.

- Sub-membrane depressurization (SMD), for crawl-space houses having dirt floors. Plastic sheeting is placed over some or all of the dirt floor, creating a plastic "slab." One or more individual suction pipes penetrate this sheeting to draw suction under the plastic (analogous to SSD), or suction is drawn on a loop of perforated drain tiles placed under the plastic (analogous to DTD).

The primary mechanism by which ASD often functions is to create a negative pressure in the soil or aggregate immediately under/beside the foundation, i.e., under the concrete floor slab, or inside the hollow-block foundation wall, or underneath a membrane laid over a dirt crawl-space floor. If the gas pressure in the soil under/beside the foundation surface is negative relative to that inside the house, then flows through any openings through the foundation (e.g., through slab cracks and block pores) will consist of clean house air flowing outward through these openings, rather than soil gas flowing inward. For the system to be effective, this soil depressurization must be maintained at least near the major openings/entry routes. (Good depressurization can be less crucial; e.g., in central, uncracked regions of slabs where there are no entry routes for convective soil gas flow into the house.) Especially in cases where a SSD or DTD system is found to be maintaining an excellent suction field in the aggregate underneath a slab, it is clear that flows through the slab openings have thus been reversed everywhere.

A second mechanism by which ASD appears to function—to a greater or lesser extent in different circumstances—is dilution of the radon-containing soil gas beneath the slab and around the foundation. ASD systems can draw house air and outdoor air down into the soil around the foundation, diluting the radon in the soil gas. Thus, even when a negative soil gas pressure is not being maintained immediately under/beside the foundation in some places, any soil gas entering the house at those locations may contain less radon, and the ASD system can sometimes still be effective if the dilution is sufficient.

Most ASD systems probably function through a combination of the two mechanisms above. Where the slab is fairly tight (so that little house air is drawn into the soil) and the native soil is fairly tight (so that little outdoor air is drawn into the soil), the soil depressurization mechanism is undoubtedly the predominant component. But where the slab is leaky and the native soil is highly permeable, so that more air is drawn into the soil, the soil gas dilution component probably becomes increasingly important. In cases of extremely permeable native soils, where flows of outdoor air into the system become so high that it is difficult to maintain an adequate suction field, the dilution mechanism may become the predominant component. As discussed later, in such cases, it is sometimes preferable to use soil pressurization techniques (which function largely by dilution) rather than to attempt soil depressurization.

Perhaps a third mechanism, referred to here as "air-barrier shielding," might also sometimes play a role. Operation of ASD systems is postulated to create flows of outdoor air down through the soil into the system. This subtle flow of ambient air under essentially unmeasurable pressure gradients may be creating a shield around the foundation, diverting soil gas which would otherwise flow toward the foundation. This mechanism could explain why SSD systems in houses having marginal sub-slab communication sometimes obtain good radon reductions despite the failure of the SSD system to establish measurable depressurizations everywhere beneath the slab. It could also explain why SSD systems in basement houses with block foundation walls can achieve high radon reductions despite failure of the SSD system to create measurable depressurizations within the wall cavities; the walls become a less important source because the soil gas is intercepted before it can enter the void network. Of course, this "air-barrier shielding" could also be interpreted as nothing more than a variation of the two mechanisms listed previously. That is, the soil is in fact being depressurized at the remote location where the conceptual air barrier diverts the soil gas flow, in accordance with the first mechanism; the depressurization is just too small to measure. Or, the soil gas is just being diluted by the ambient air flow, in accordance with the second mechanism.

In practice, ASD systems are commonly designed assuming that the first mechanism above is the sole mechanism that can be relied upon. That is, effective depressurization of the soil and fill material is assumed to be necessary immediately under/beside the exterior surface of the foundation, at least in the vicinity of openings through the foundation. In particular, ASD variations involving depressurization beneath a concrete floor slab (SSD, and DTD in cases where the drain tile loop is inside the footings) must achieve effective depressurization immediately under the slab. (There are specific cases, with some ASD variations, where comprehensive depressurizations are difficult and often unnecessary to maintain under/beside some foundation surfaces; these cases will be discussed later.) To maintain effective soil depressurization near all entry routes through the foundation, the ASD system requires a suitable combination of the following factors.

- Suction points located sufficiently close to the entry routes.
- Adequate communication within the aggregate and soil immediately under the slab (or under the membrane covering the dirt floor in the crawl-space). With good communication, the suction field generated by a suction point can extend beneath the slab to entry routes remote from the suction point. Good communication thus reduces the need to locate suction points close to all of the entry routes. Where SSD or DTD are being relied upon to treat entry routes associated with the foundation wall, or where BWD systems are being relied upon to treat slab-related entry routes, communication between the sub-slab and the void network within the block wall, or between the sub-slab and the soil on the outside of the footing/foundation wall, can sometimes also be of concern (in addition to the communication within the sub-slab aggregate/soil).
- Fans sufficiently powerful to develop adequate suctions in the system piping at the flows that are encountered. Even where communication is satisfactory, fans developing adequate suction increase the likelihood that sufficient depressurization will extend through the aggregate, soil, or wall voids, remote from the suction points. Where communication is very poor, it becomes all the more important that the fans achieve at least some minimum suction (although very high-suction fans will not necessarily provide significant additional extension of measurable soil depressurization).
- A system design intended to minimize pressure loss in the system, so that fan suction is effectively used in establishing a suction field in the soil rather than in simply moving gas through the system piping. Among the steps that can by implemented to reduce pressure loss in the system are a) use of system piping with a sufficiently large cross-sectional area; b) reducing the length of the piping runs and the number of elbows and other flow obstructions; and c) excavating a hole under the slab under SSD pipes, to reduce pressure loss as the soil gas accelerates to piping velocity.
- Closure of major openings in the slab or foundation wall beneath or beside which the soil is being depressurized (e.g., closure of important slab openings when sub-slab depressurization is used). If such openings are not adequately closed, indoor air will flow out through these openings and will enter the suction system. The ability of the soil suction field to extend effectively to remote entry routes could be seriously hindered by house air flowing into the soil/aggregate through unclosed openings.

These factors will be repeatedly addressed in the subsequent discussions of the individual ASD variations.

The general principles indicated above are discussed further below, as they pertain to each of the specific variations of the ASD technique.

US EPA ARCHIVE DOCUMENT

US EPA ARCHIVE DOCUMENT

2.1.1 Active Sub-Slab Depressurization (SSD)

In active SSD, a fan is used to draw soil gas away from the foundation by means of individual suction pipes which are inserted into the region under a concrete slab. The pipes are commonly inserted vertically downward through the slab from inside the house, as illustrated in Figure 1. When more convenient, they can also be inserted horizontally through a foundation wall at a level beneath the slab, as in Figure 2. Horizontal penetration through a foundation wall is most likely to be convenient when the slab is near grade level, and the penetration can be made from outdoors (as shown in Figure 2) or through the stub wall from inside an adjoining basement.

The intent of the SSD system is to create a low-pressure region underneath the entire slab. If a depressurization can be maintained under the slab which is sufficiently large so as not to be overwhelmed by depressurizations created inside the house by weather effects and homeowner activities, this would prevent soil gas from entering the house through cracks and other openings in the slab. It could also reduce or prevent soil gas entry into the void network inside hollow-block foundation walls in the region around the footings, thus at least partially preventing radon entry via the walls. Sometimes, the depressurization can extend under the footings or through the block walls to inhibit soil gas entry into the house through below-grade openings in the exterior face of the foundation wall.

Were the system to function solely by the primary mechanism discussed earlier, i.e., by maintaining a measurable depressurization in the soil everywhere that it contacts the foundation, a soil depressurization of about 0.015 in. WG, measured during mild weather, would nominally be required to ensure that subsequent cold weather and winds would rarely depressurize the house sufficiently to overwhelm the system. If exhaust appliances were off during the measurement, the soil would nominally have to be depressurized by an additional 0.01 to 0.02 in. WG to ensure that the system would not be overwhelmed when these appliances were turned on. However, some experience suggests that the other mechanisms mentioned earlier, including soil gas dilution and perhaps air-barrier shielding, can come into play to varying degrees, depending upon the circumstances. These other mechanisms could explain why good radon reductions are often achieved by SSD systems even in cases where portions of the sub-slab are only marginally depressurized, to an extent far less than the nominally required 0.025 to 0.035 in. WG. They could also explain why SSD systems appear to prevent radon entry through wall-related entry routes in many (but definitely not all) cases, even when no depressurization (or only minimal depressurization) can be measured inside the wall voids.

The central issues with SSD systems are the number of suction pipes needed, where they must be placed, and the suction that the fan must maintain in the pipes, in order to establish an adequate sub-slab depressurization near all (or at least the major) soil gas entry routes. The resolution of these issues is determined largely by the communication beneath the slab, i.e., by the ease with which suction at one point can extend to other parts of the slab and to the surrounding soil. Where a good and uniform layer of aggregate (gravel or crushed rock) was placed under the slab during construction, communication immediately underneath the slab will generally be very good. In such cases, one (or perhaps two) suction pipes will generally be sufficient, and can be located with some flexibility, even if the communication within the native soil, underlying the aggregate, is poor. Where there is good aggregate, the system can be pictured as using the aggregate layer as a large collector or plenum, into which the soil gas in the vicinity of the house is drawn and then exhausted outdoors. Where there is not a good layer of aggregate, or where the layer is uneven or interrupted to a significant degree, more suction pipes will commonly be needed, and their location near to the major entry routes (such as the wall/floor joint) will be increasingly important, depending upon the communication within the underlying soil.

Although poor communication within the underlying soil will not impact the ability of SSD to depressurize slab-related entry routes when sub-slab aggregate is present, it would hinder the suction field from extending through the soil under the footings. Thus, it could impact the ability of SSD to depressurize entry routes associated with the outer face of the foundation walls. It would also reduce the flow of outdoor air down through the soil, thus reducing the possible roles of soil-gas dilution and air-barrier shielding as mechanisms in determining SSD performance.

Where drain tiles are located inside the footings under the slab, the drain-tile depressurization approaches described in Sections 2.1.2 and 2.1.3 are essentially a variation of SSD. However, in this document, the term "sub-slab depressurization" is used only to refer to cases where individual pipes are inserted into the sub-slab region in the manner depicted in Figures 1 and 2, or in closely-related adaptations of that approach.

SSD has been one of the most widely applied and effective approaches used by the radon mitigation industry, especially in treating high-radon houses. SSD should be one of the first techniques considered in any house, especially where there is no sump and where sump/ DTD is thus not an option.

2.1.2 Active Sump/Drain-Tile Depressurization (Sump/DTD)

Drain tiles surround part or all of some houses in the vicinity of the footings to collect water and drain it away from the foundation. The drain tiles may be perforated rigid plastic (usually ABS or PVC), perforated flexible plastic (high-density polyethylene or polypropylene), or porous clay. Drain tiles will generally be located right beside, or just above, the perimeter footings. They can be either on the side of the footings away from the house (in which case they are referred to here as "exterior" drain tiles), or on the side toward the house (referred to as "interior" drain tiles). In houses with slabs, interior drain tiles would be under the slab, embedded in any sub-slab aggregate. Sometimes (although not commonly) interior drain tiles are not located beside the footings but extend underneath the slab in some different pattern. Exterior drain tiles are usually buried in a bed of aggregate

US EPA ARCHIVE DOCUMENT

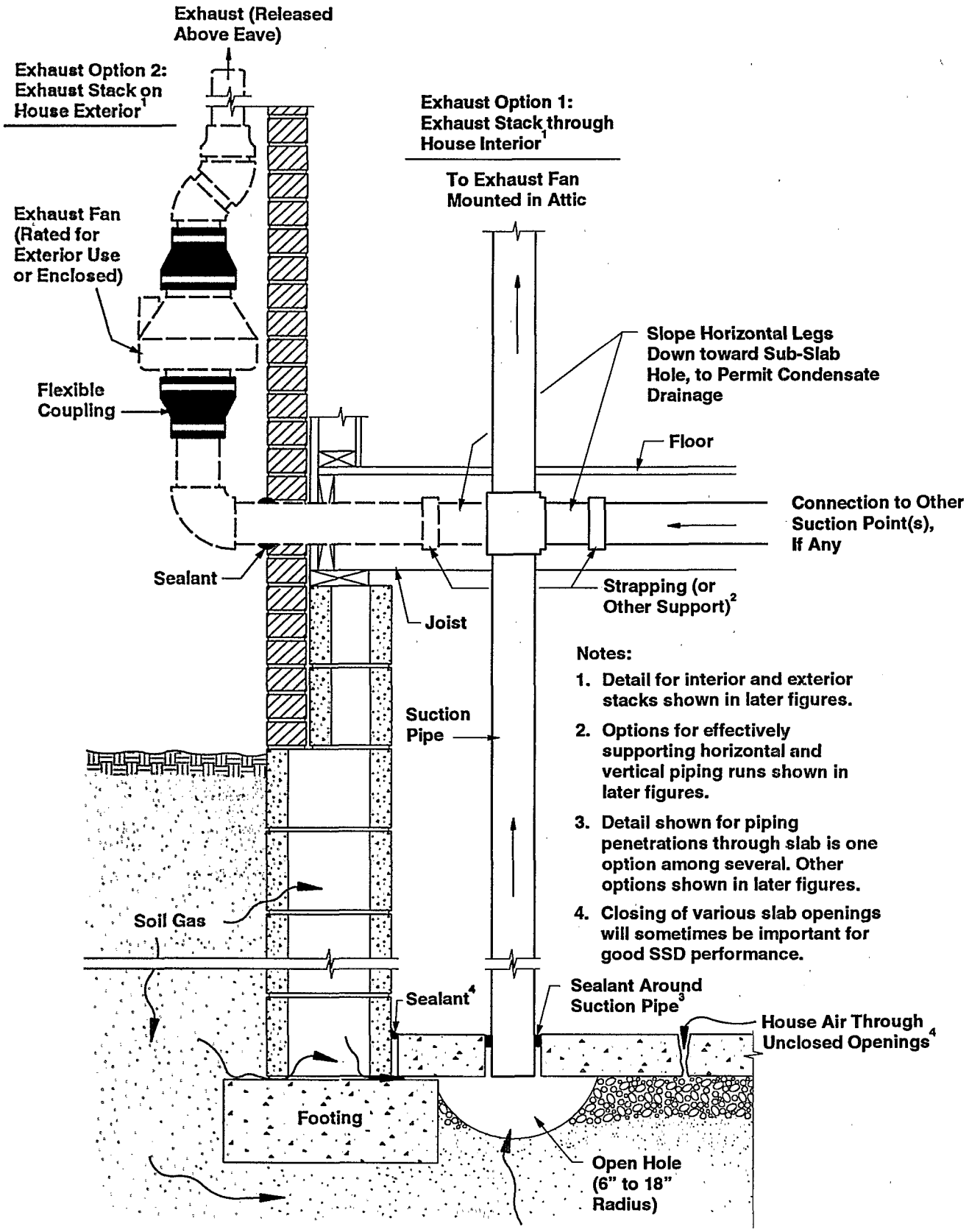

Figure 1. Sub-slab depressurization (SSD) using pipes inserted down through the slab from indoors.

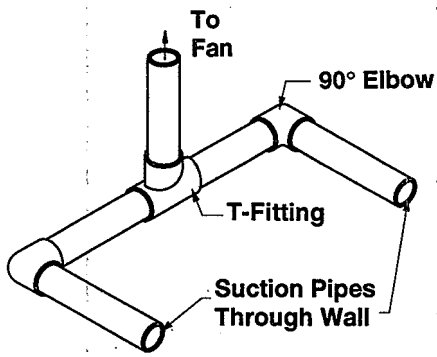

One possible configuration for a multi-pipe system

Notes:

1. The exterior downspout exhaust stack illustrated here is one of several possible stack configurations, as discussed later.

2. Sealing pipe penetration through wall is important to reduce leakage of outdoor air and air from block cavities into SSD system.

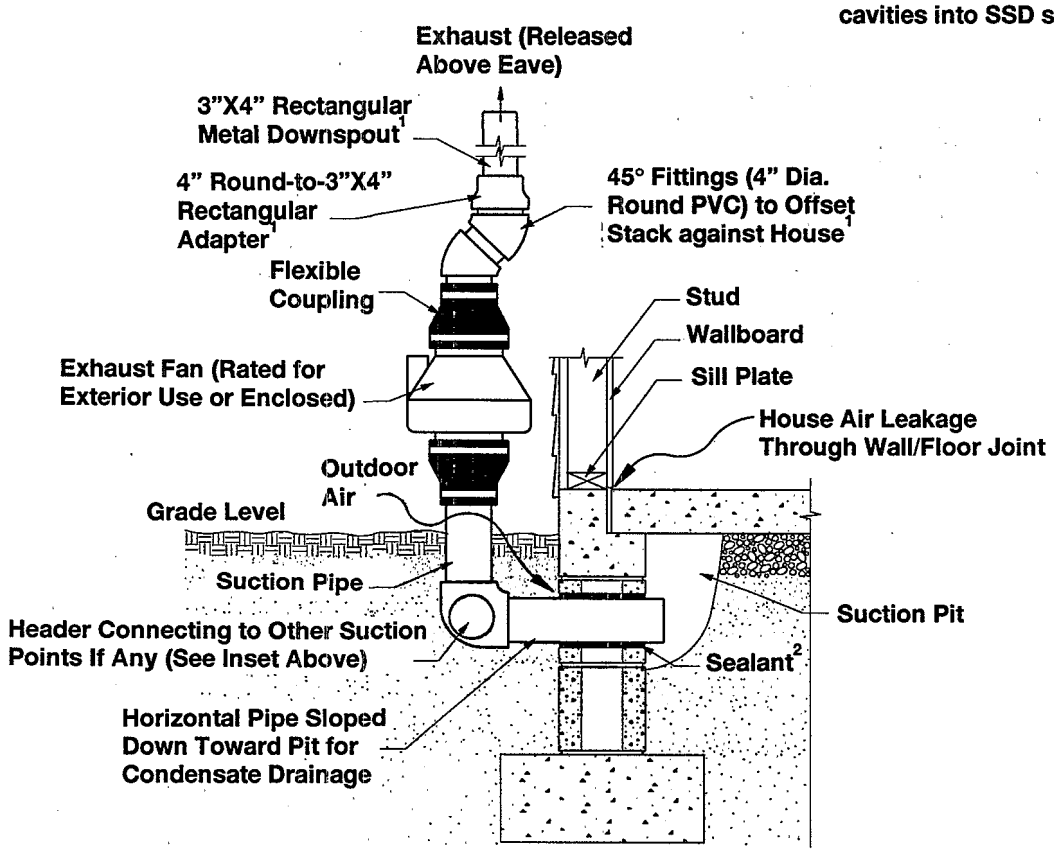

Figure 2. Sub-slab depressurization (SSD) using pipes inserted horizontally through the foundation wall from outdoors.

beside the footings; this exterior aggregate bed is sometimes (but not always) covered with a material such as geotechnical cloth or roofing felt, intended to reduce pluggage of the gravel bed with dirt.

Both interior and exterior drain tiles can discharge collected water by either one of three methods. If the lot is sufficiently sloped, the water can be routed to an above-grade discharge at a low point on the lot, remote from the house. As an alternative, the water can be directed to a dry well away from the house. Or, in basement houses when the lot is not sufficiently sloped, the water is drained to a sump inside the basement, from which the water is pumped to an above-grade discharge. This section addresses the case where the tiles drain to a sump.

A typical sump/DTD system is illustrated in Figure 3. An air-tight cover is sealed over the sump pit. Suction is then drawn on the drain tile network by connecting a suction pipe to the sump/drain tile system. While the suction pipe can be installed through the sump cover, it can be advisable instead to connect the suction pipe to the tiles at a location remote from the sump, as illustrated in the figure. Installation of the suction pipe remote from the sump will facilitate subsequent maintenance of the sump pump, and will reduce the suction loss that will result if air leaks develop around the sump cover (e.g., as a result of improper re-installation of the cover after subsequent sump pump maintenance).

The drain tiles shown in Figure 3 are interior tiles, although exterior tiles can also drain to a sump. Where the drain tiles

US EPA ARCHIVE DOCUMENT

US EPA ARCHIVE DOCUMENT

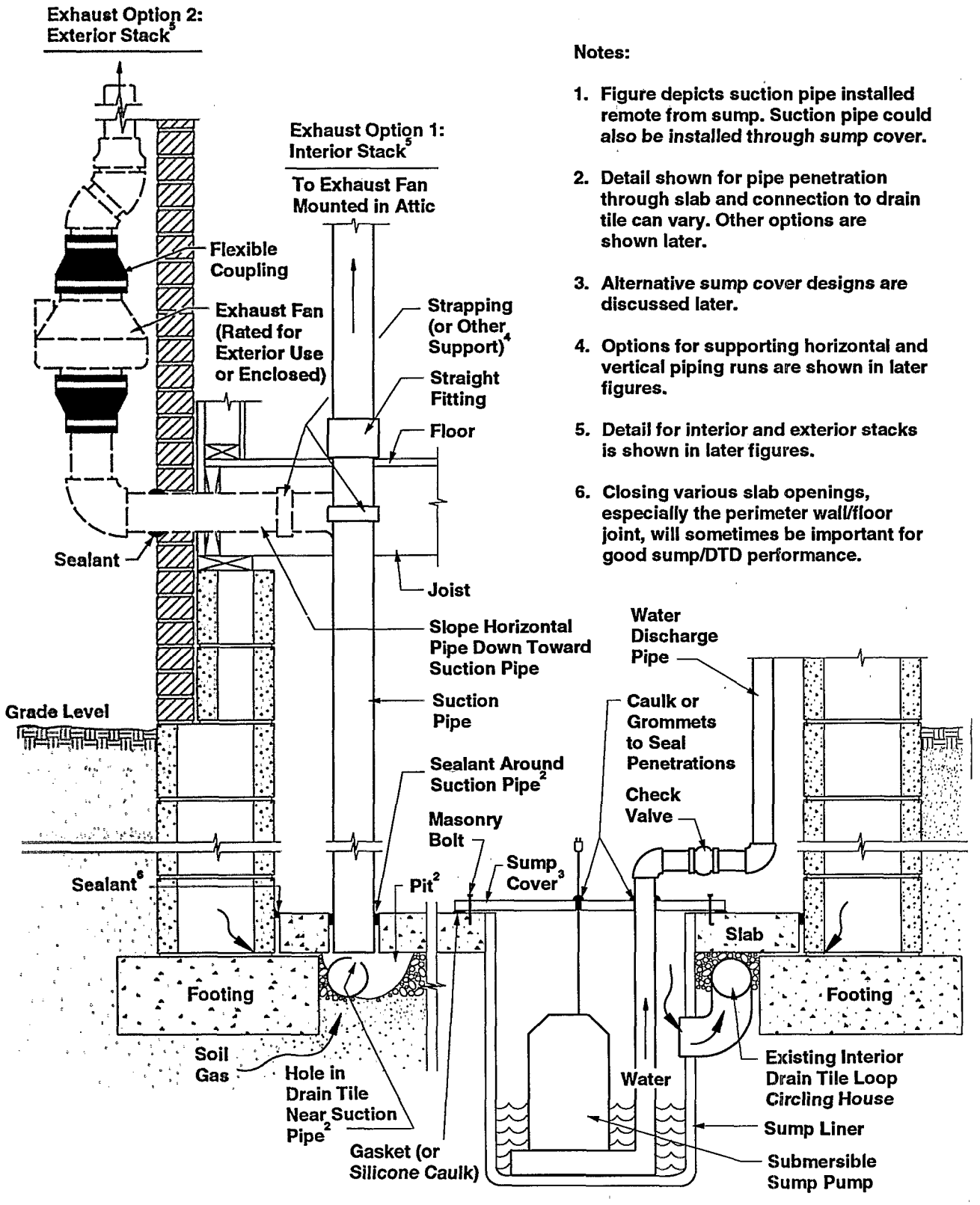

Notes:

1. Figure depicts suction pipe installed remote from sump. Suction pipe could also be installed through sump cover.
2. Detail shown for pipe penetration through slab and connection to drain tile can vary. Other options are shown later.
3. Alternative sump cover designs are discussed later.
4. Options for supporting horizontal and vertical piping runs are shown in later figures.
5. Detail for interior and exterior stacks is shown in later figures.
6. Closing various slab openings, especially the perimeter wall/floor joint, will sometimes be important for good sump/DTD performance.

Figure 3. Drain-tile depressurization (DTD) where the tiles drain to a sump in the basement.

are exterior tiles, and where the suction pipe taps into these exterior tiles remote from the sump, the piping will connect to the tiles outside the house and will look more like that shown in Figure 4 for DTD/remote discharge systems. (Of course, when exterior tiles drain to a sump, the remote discharge line in Figure 4 will be absent, and the suction pipe will thus be connecting to the drain tile loop immediately beside the footings rather than to the discharge line.)

Where the tiles are interior tiles, the principles involved with this DTD system are basically the same as those for the SSD variation described in the previous section. However, DTD on interior tiles offers two key advantages. First, the tiles provide a network that helps distribute the suction under the slab and are located in a zone which will necessarily always have been excavated and backfilled during construction (and hence will generally have some communication, even under houses where little or no aggregate has been placed). Second, the tiles are located right beside two of the major soil gas entry routes: the joint between the perimeter foundation wall and the concrete slab inside the house; and the perimeter footing region where soil gas can enter the void network inside block foundation walls. Thus, interior drain tiles provide a convenient, in-place network that enables suction to be easily and effectively drawn over a wide area, particularly where it is usually needed the most. These features are particularly important in cases where sub-slab communication is marginal or poor; they are less important in cases where there is a good layer of sub-slab aggregate.

Because sump/DTD with interior tiles generally ensures effective suction immediately beside the footings, this approach may be more likely than SSD to treat the block walls at points around the perimeter where the tiles are present.

Where the tiles draining into the sump are exterior tiles, the sump/DTD system will still be expected to divert soil gas away from the void network in block foundation walls. However, because the suction on exterior tiles is being applied outside the footings, any suction field created beneath the slab will depend upon extension of the exterior suction through the bottom course of blocks or beneath the footings, into the sub-slab region. This extension, in turn, will depend upon the permeability of the underlying native soil. Limited suction field data from sump/DTD systems with exterior tile loops suggest that, as expected, the sub-slab depressurizations created by such systems can be lower than those by systems having interior loops. Suction on an exterior loop does appear to treat the wall/floor joint inside the footings, at locations where tile is present, but the reduced sub-slab depressurizations might result in lesser treatment of slab-related entry routes toward the central portion of the slab.

The chances of achieving effective treatment with sump suction (with either interior or exterior tiles) are greatest when the tiles form a nearly complete loop around the perimeter (i.e., around at least three sides of the house). However, good performance can sometimes be achieved even when there is only a partial loop, on one or two sides. This is especially true when there is an interior loop and aggregate under the slab. With exterior tiles, good performance with partial loops appears to depend on good permeability in the native soil.

Because of the typical effectiveness of sump/DTD, this approach should be among the first considered in any basement house having a sump with drain tiles. Sump/DTD will commonly be the preferred approach when the sump connects to an interior loop of tiles, whether or not there is a layer of sub-slab aggregate. However, when there is aggregate, SSD is a competitive option, and SSD might still be selected instead of sump/DTD under some conditions (e.g., if there is a high degree of floor/wall finish at the location where the suction pipe would have to be inserted into the drain tiles). Where the drain tiles form an exterior loop, SSD in the basement may sometimes be preferred over sump/DTD, especially if there is sub-slab aggregate, since SSD will apply the suction beneath the slab rather than outside the footings. However, sump/DTD can still be a good choice if there is a reasonably complete exterior loop of tiles (i.e., on at least three sides of the house), especially if the owner wants to keep all of the system piping outside the house (tapping the suction pipe into the tiles outdoors, remote from the sump). If there are only exterior tiles, and if these tiles do not form a reasonably complete loop, suction on the tiles will not be delivered directly to some portion of the perimeter; this will be of greatest concern when the native soil has low permeability. In such cases, SSD might warrant greater consideration as the initial approach.

2.1.3 Active Drain-Tile Depressurization (Above-Grade/Dry-Well Discharge)

Where the tiles drain to an above-grade discharge or to a dry well, a different basic DTD design is required, as illustrated in Figure 4. A check valve is installed in the discharge line, to prevent outdoor air from being drawn into the system via the discharge line. Suction is then drawn on the drain tile network, as illustrated. The suction pipe will often be connected to the drain tile loop immediately beside the footings; it can also connect to the discharge line, as shown in Figure 4. The drain tiles shown in the figure are exterior tiles, which will commonly be the case when there is remote discharge, although interior tiles can also drain remote from the house.

The principles involved with DTD/remote discharge are the same as those described in the preceding section for sump/DTD.

Because DTD/remote discharge can be effective, and because the system will be entirely outside the house (making it potentially less obtrusive and less expensive than other ASD options), this approach should be among those considered in any case where remotely-discharging drain tiles exist. As in the sump/DTD case, DTD/remote discharge will most often be the preferred approach when there is an interior loop of tiles, especially when there is not a good layer of sub-slab aggregate; a good aggregate layer would make SSD more competitive. DTD/remote discharge will also often be selected when there is a reasonably complete exterior loop (i.e., around at least three sides of the house). When the drain tile loop is exterior to the footings, there is an increased chance that SSD may turn out to be the technique of choice, rather than DTD/remote discharge, because SSD will apply the suction directly under the slab.

US EPA ARCHIVE DOCUMENT

US EPA ARCHIVE DOCUMENT

Notes:

1. For clarity, suction pipe is depicted installed in the drain tile discharge line. Commonly, the suction pipe might instead be installed directly in the tile loop beside the footings.

2. Figure depicts one option for connecting the rigid 4" diam. suction pipe to 4" flexible corrugated drain tile. Alternative methods of connection to 3" and 4" flexible tile, or to rigid plastic or clay tile, are presented in text.

3. The reverse flow valve shown represents one design currently on the market. Other valve configurations are available.

4. The exterior downspout exhaust stack illustrated here is one of several possible stack configurations.

5. Closing various slab openings, especially the perimeter joint, will sometimes be important for good DTD performance.

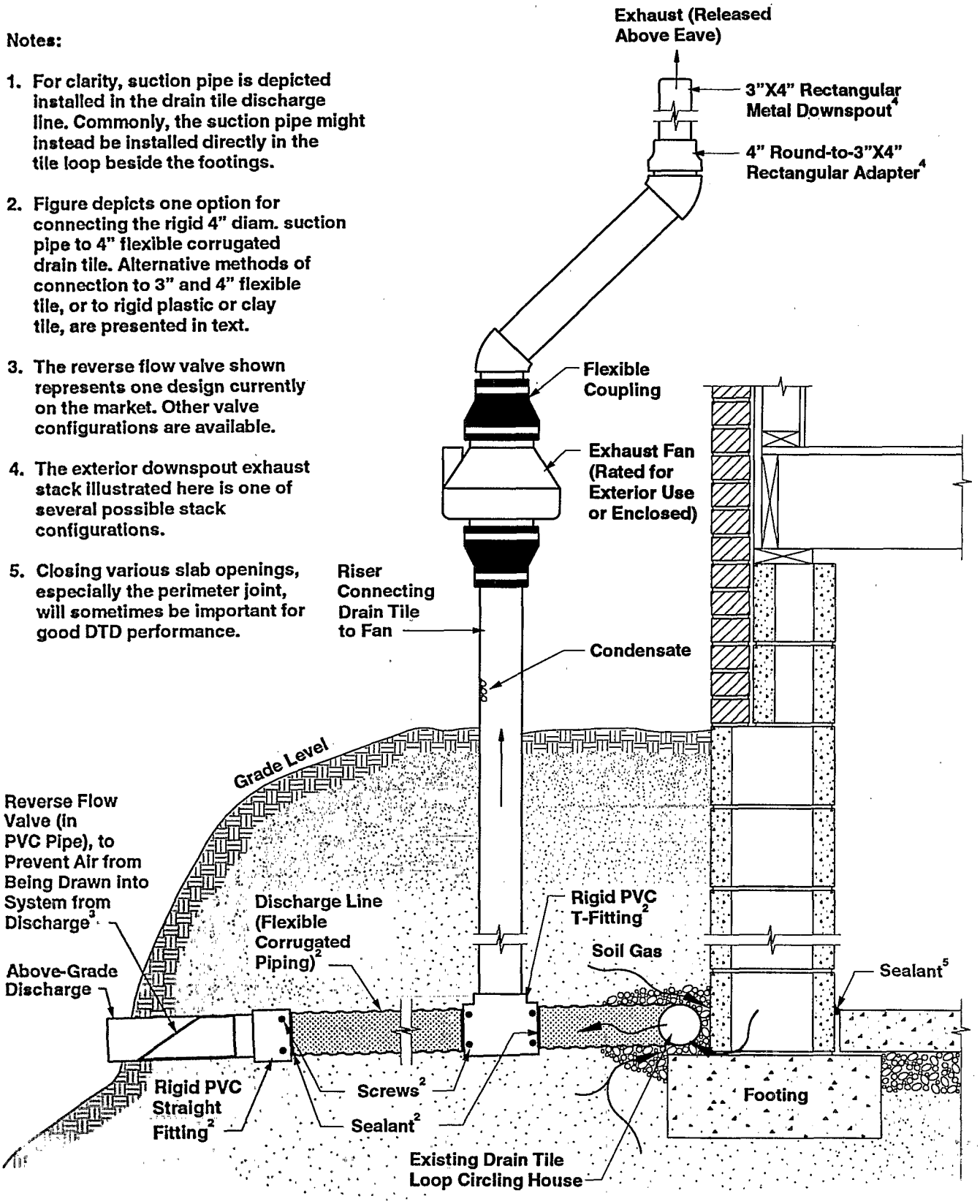

Figure 4. Drain-tile depressurization (DTD) where the tiles drain to an above-grade discharge remote from the house.

US EPA ARCHIVE DOCUMENT

2.1.4 Active Block-Wall Depressurization (BWD)

When the foundation wall is constructed of hollow concrete or cinder blocks, the interconnected network of block cavities within the wall can serve as a conduit for soil gas. Soil gas which enters the wall through mortar joint cracks, pores, and other openings in the exterior face of the blocks below grade can move either vertically or laterally throughout the wall inside this void network. Where the house has a basement, with the interior face of the blocks inside the basement, the soil gas can then be drawn into the house through any openings in the interior face, such as holes around utility penetrations, mortar joint cracks, and the pores in the block itself. Even more importantly, if the cavities in the top course of block open to the basement, the walls will act as a chimney, with soil gas flowing up through the void network and into the basement through these uncapped top voids. Even in slab-on-grade or crawl-space houses with hollow-block foundations, it is sometimes possible (if the top cavities are not closed) for soil gas in the block voids to flow up into the wooden framing resting on top of the wall, and hence into the house, even though the foundation wall itself does not extend up into the living area.

The principle of BWD is to draw the soil gas out of this void network using a fan drawing suction on the voids. The fan would presumably increase the flow of soil gas into the voids, but would draw the soil gas into the system piping and exhaust it outdoors rather than permitting it to enter the basement. Where the block walls are the primary entry route, and where the BWD system is able to adequately depressurize the void network, this approach would most directly treat that entry route. The depressurization created within the voids by a BWD system will sometimes extend under the slab, depending upon the communication between the voids and the sub-slab, and upon the communication within the sub-slab fill. Thus, the wall/floor joint, and perhaps some slab-related entry routes more remote from the walls, will sometimes also be treated by a BWD system.

Figure 5 illustrates one method for implementing BWD. This approach, referred to as the "individual pipe" approach, involves insertion of one or two suction pipes into the void network in each wall to be treated; these pipes are then connected to one or more fans. A second approach for implementing BWD, referred to as the "baseboard duct" approach, has been used occasionally. In this approach, a series of holes is drilled into the void network around the perimeter of a basement, just above slab level; these holes are then enclosed within a plenum ("baseboard") sealed to the wall and slab around the perimeter, and the plenum is connected to a fan. For clarity, Figure 5 shows BWD being used as a stand-alone technique; however, more commonly where BWD is used, the primary mitigation system will be a SSD system, with depressurization of one or more selected walls implemented as a component of that SSD system.

A key problem with BWD is that the numerous and often-concealed wall openings (especially open top wall voids, and block pores) are very difficult to close adequately. Thus, despite efforts to close these openings, large amounts of house air (and possibly outdoor air) will leak into the BWD system through these openings. Therefore, it has often proven to be difficult or impractical to maintain sufficient depressurization throughout the entire wall. Thus, the wall-related entry routes have sometimes not been adequately treated (along with centrally located slab-related routes), with the result that radon reductions have not been consistent either within a given house over time, or between houses, when BWD is used as a stand-alone method. As an added concern, substantial house air leakage into a BWD system has sometimes depressurized the basement sufficiently to cause backdrafting of fireplaces and other combustion appliances (as well as increasing the heating/cooling penalty of the system). Where backdrafting occurs, an outdoor supply of combustion air must be provided, or else the BWD system might be operated in pressure instead of suction. Basement depressurization resulting from BWD systems can also increase soil gas influx through wall- and slab-related entry routes not adequately depressurized by the system, thus reducing net radon reduction performance, and sometimes even increasing basement concentrations (e.g., House 19 in Reference Sc89).

In view of these concerns, BWD is looked upon as a technique which would be used largely as an occasional supplement to SSD systems, rather than as a method that would commonly be used by itself. The role of BWD as a supplement to SSD can be very important in some cases. Even where a SSD system has very effectively depressurized the entire sub-slab region, occasional cases have been encountered where this sub-slab depressurization did not adequately prevent soil gas from entering the void network, requiring simultaneous treatment of the walls using BWD (e.g., Houses 3 and 16 in Reference Fi91).

2.1.5 Active Sub-Membrane Depressurization (SMD) in Crawl Spaces

In houses having a crawl space with a dirt floor (including dirt floors covered with gravel and/or with a plastic vapor barrier), a variation of SSD or DTD can be implemented if a "slab" (in the form of a plastic membrane) is placed over the dirt floor. Suction can be drawn underneath this plastic "slab," either using individual suction pipes penetrating the membrane (analogous to SSD), or through suction on a length or a loop of perforated drain tile placed beneath the plastic (analogous to DTD). Examples of both SMD approaches are illustrated in Figures 6 and 7.

SMD has been demonstrated to be the most effective radon reduction method for crawl-space houses. It should be one of the first methods considered in any crawl-space house where the crawl space is accessible for system installation and where the required radon reductions are sufficiently great (greater than about 50%) such that natural ventilation of the crawl space will not be adequate. Use of an exhaust fan to depressurize the entire crawl space, preventing radon-containing crawl-space air from flowing up into the living area, has also been found to be effective, as well as less expensive than SMD to install. However, crawl-space depressurization is usually less effective than SMD, and has a much higher heating penalty, since much of the air exhausted by the

US EPA ARCHIVE DOCUMENT

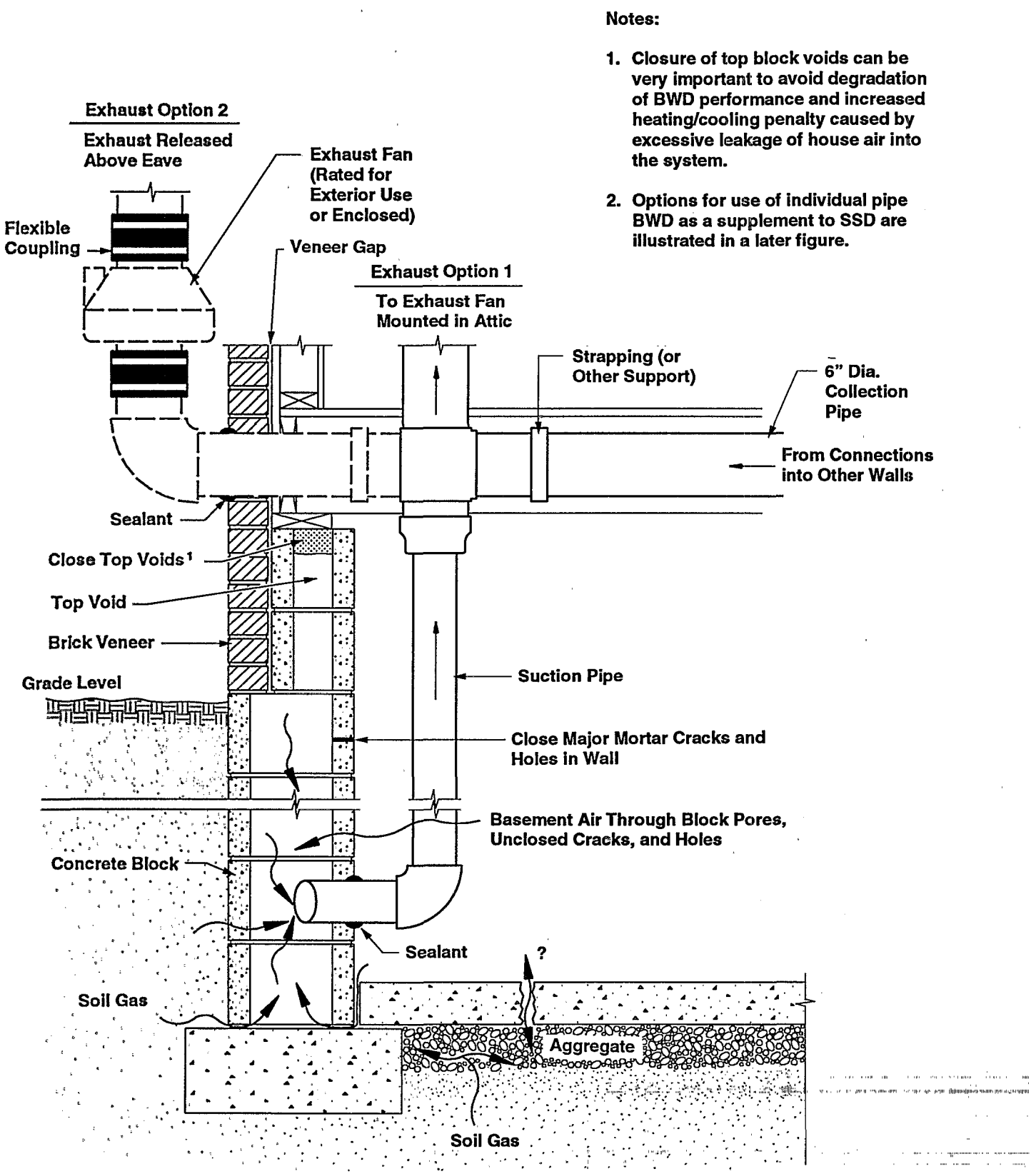

Figure 5. Block-wall depressurization (BWD) using the individual-pipe approach.

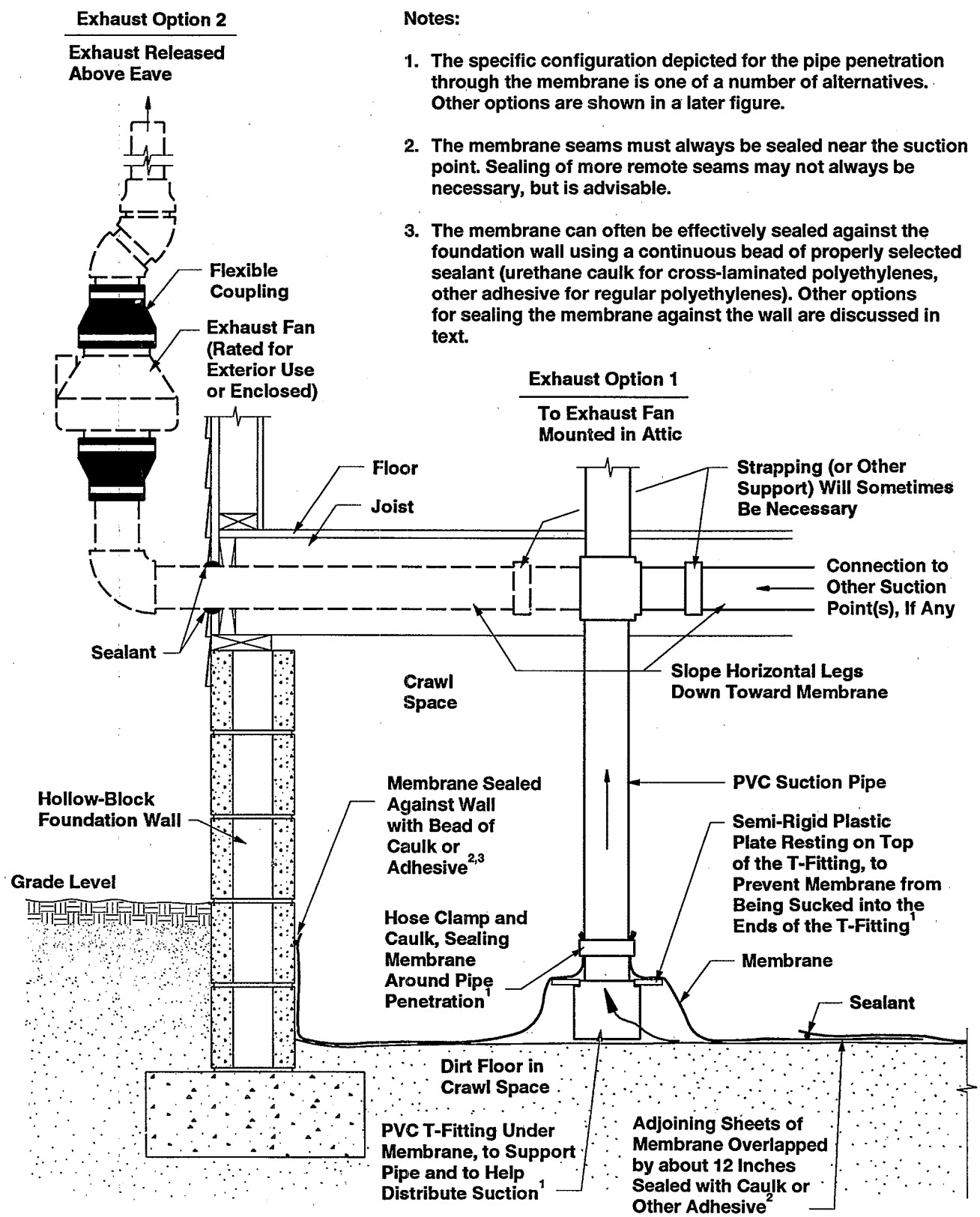

Figure 6. Sub-membrane depressurization (SMD) for the case where individual suction pipes penetrate the membrane (SSD analogue).

US EPA ARCHIVE DOCUMENT

Notes:

1. The perforated piping is depicted here as a straight length down the center of the crawl space. Alternative configurations are discussed in the text.
2. The perforated piping depicted in the inset is flexible corrugated piping. Rigid perforated Schedule 40 pipe could also be used.
3. The membrane seams should always be sealed near the perforated piping. Sealing of remote seams may not always be necessary, but is advisable.
4. The membrane can often be effectively sealed against the foundation wall using a continuous bead of an appropriate sealant. Other options for sealing the membrane against the wall are discussed in the text.

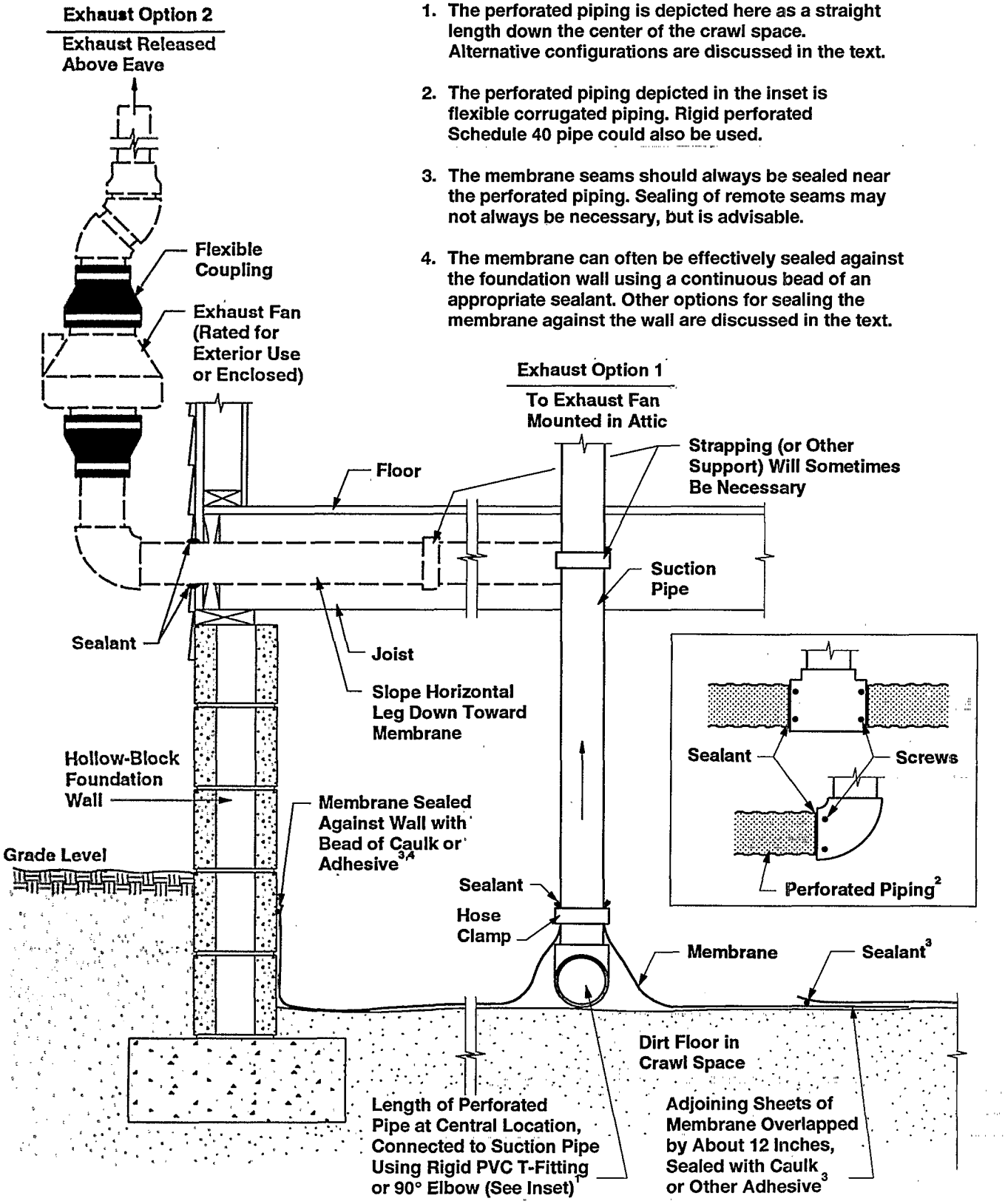

Figure 7. Sub-membrane depressurization (SMD) for the case where suction is drawn on perforated piping beneath the membrane (DTD analogue).

depressurization fan will be treated house air drawn down from the living area.

The principles involved in SMD are similar to those for SSD and DTD.

- If adequate suction can be maintained beneath the plastic, soil gas entry into the crawl space should be reduced or eliminated. By this sub-membrane depressurization mechanism, gas flows through seams or punctures in the membrane should be crawl-space air being drawn down into the sub-membrane region, rather than soil gas flowing up into the crawl space, from which it might enter the living area.

- The other mechanisms discussed earlier for ASD systems may also come into play: dilution of the soil gas radon levels under the membrane, resulting from the increased flows of air into the sub-membrane region (from the crawl space, the block walls, and outdoors); and air-barrier shielding.

- In crawl spaces having block foundation walls, the SMD system might help prevent soil gas entry through the block cavities into the crawl space and into the living area overhead, analogous to SSD and DTD. However, there are not sufficient data in houses where block crawl-space walls are a major living-area entry route to assess how consistently or reliably SMD will thus treat the walls.

In addition, there may be an element of crawl-space depressurization contributing to the performance of SMD systems. Significant leakage of crawl-space air into the SMD system through membrane openings can cause such depressurization of the entire crawl space relative to the living area, reducing or completely reversing the normal flow of crawl-space air up into the living area. This can be an effective mitigation method in its own right (He92).

Where the crawl space has a floor of bare earth, which is often the case—i.e., where there is not a layer of gravel on the floor beneath the membrane—suction beneath a SMD membrane is analogous to SSD with no aggregate under the slab. Thus, just as with SSD in houses having poor sub-slab communication, the sub-membrane depressurizations maintained in SMD systems are generally fairly low, and measurable suction field extension beneath the membrane is limited. These lower depressurizations may mean that SMD systems will be less likely; e.g., to treat wall-related entry routes, in cases where that might be necessary. However, SMD systems have generally proven to be very effective in crawl-space houses, despite reduced sub-membrane suctions.

Where the crawl space is large, where significant reductions in indoor radon concentrations are desired (e.g., to 2 pCi/L or less), and/or where the soil comprising the crawl-space floor has very low permeability (with no gravel on the floor), it has sometimes been found necessary to take steps to help the sub-membrane suction field extend adequately around the crawl space. The most common steps are installing additional suction pipes through the membrane (analogous to installing multiple suction pipes in a SSD system), or connecting the suction system to perforated piping under the membrane (as in Figure 7).

A key remaining issue in the design of SMD systems is how much effort should be made to reduce crawl-space air leakage into the system by sealing the membrane against perimeter foundation walls and interior piers, and at seams between sheets of plastic. Some results suggest that such comprehensive sealing of the membrane may not always be necessary in order to achieve good radon reductions in the living area. This result is probably a commentary on the limited sub-membrane depressurizations needed to adequately reduce soil gas flow into the crawl space in some cases. It may also be a commentary on the relative benefits of the mechanisms other than sub-membrane depressurization discussed above, especially sub-membrane soil gas dilution and crawl-space depressurization.

Comprehensive sealing of the membrane is often conducted routinely by mitigators. Mitigators report that complete sealing is needed in order to ensure the best radon reduction performance. Complete sealing also will help avoid possible backdrafting of combustion appliances in the crawl space as a result of the crawl-space depressurization that can occur if the SMD fan draws too much crawl-space air out through the unsealed seams. Furthermore, complete sealing will reduce the amount of treated air drawn out of the living area and exhausted by the SMD system, thus reducing the heating/cooling penalty. Until further research confirms the conditions under which incomplete membrane sealing is acceptable, it is advisable to seal the membrane everywhere.

This issue extends to the question of whether the entire crawl-space floor even has to be covered by the membrane. This question is important because portions of crawl spaces are often inaccessible or are occupied by, for example, the furnace and water heater. Good radon reductions have sometimes been achieved even in cases where the dirt floor was not entirely covered. This result could be suggesting that a) some sections of the dirt floor are less significant sources of radon than others; b) suction on a portion of the soil can extend sufficiently to intercept the soil gas before it reaches the uncovered sections of floor; and/or c) depressurization of the entire crawl space is contributing to the observed reductions, through a different mechanism than soil depressurization. Until this question is better understood, it is advisable to ensure that the entire crawl-space floor is covered by the membrane, if at all possible.

In isolated cases, relatively good radon reductions have been achieved with "sub-membrane depressurization" without the membrane, i.e., by drawing suction on pipes embedded in the bare soil in the crawl space. Referred to here as "site ventilation," this approach is analogous to the "radon wells" in Sweden, and would appear to require certain geological characteristics in order to be successful. The soil would have to be relatively permeable laterally, and less permeable vertically toward grade, so that the suction field would extend through the soil over the area of the crawl space, but would not be dissipated by extensive leakage of crawl-space air down from above. A strata of porous, gravelly soil, capped with a layer of clay soil, would be an ideal example of a geology conducive

US EPA ARCHIVE DOCUMENT

to this approach. Site ventilation cannot be expected to be sufficient by itself in most locations. However, the fact that SMD can sometimes be effective even when the membrane does not cover the entire floor could be indicating that a site ventilation component may exist in some SMD installations.

2.2 Applicability of Active Soil Depressurization

Where properly designed and operated, ASD systems (especially SSD, DTD, and SMD) have consistently demonstrated high, reliable radon reductions in a wide range of houses. Radon reductions greater than 90% are common when pre-mitigation levels are significantly elevated. Performance has been demonstrated in thousands of commercial installations (and numerous experimental installations) over the past 8 years, in houses having the full range of substructure types. Installation costs of ASD systems are typically moderate. Exact costs can vary from house to house: a range of $800-$2,500 appears generally representative for most commercially installed ASD systems (He91b, He91c, Ho91, EPA92c), with an average cost of $1,135 for SSD and DTD obtained from an EPA survey of private-sector mitigation (Ho91). Other radon reduction approaches have one or more of the following disadvantages, relative to ASD:

a) Some other approaches are more expensive to install than ASD. Air-to-air heat exchangers for house ventilation have an average installation cost of $1,606 according to Reference Ho91. Entry route sealing as a stand-alone method can sometimes be more expensive than ASD, depending upon the extent of the sealing and the amount of floor/wall finish that must be removed and re-installed to permit the sealing.

b) Most other approaches are less effective than ASD. Air-to-air heat exchangers provide reductions no greater than 25-75%; entry route sealing as a stand-alone method provides 0-50%; natural crawl-space ventilation provides 0-50%.

c) Other approaches are generally less well demonstrated. House pressurization has been successfully tested in only a limited number of houses; most of the other alternatives to ASD listed in a) and b) are also less well demonstrated than ASD.

In view of their demonstrated high radon reductions in a wide variety of houses, and in view of their moderate cost, ASD systems should be one of the first approaches considered in essentially any house. These systems are applicable in treating houses having very high pre-mitigation radon concentrations (e.g., above 100 pCi/L). ASD will generally be required in order to reliably achieve 4 pCi/L and less in any house where the pre-mitigation level is above about 8 to 16 pCi/L. (Only house pressurization and crawl-space depressurization appear to offer potential for achieving reductions as great as ASD, and these other techniques are much less well demonstrated, are not as widely applicable, and can offer other complications.) And ASD can also be cost-effective in treating houses having only slightly elevated pre-mitigation levels (e.g., 4 to 10 pCi/L), potentially providing greater and more reliable reductions at less long-term capital and operating cost than the other alternatives for achieving moderate reductions, namely, house ventilation and entry route sealing.

Techniques other than ASD would be considered most seriously in unusually difficult houses having combinations of the following complications:

a) very poor sub-slab communication, requiring a large number of suction pipes;

b) fieldstone foundation walls which are an important entry route, since such walls can be difficult to treat and are not amenable to BWD;

c) a very high degree of floor/wall/ceiling finish on the story in contact with the soil, thus complicating the placement and routing of suction pipes;

d) homeowner resistance to aspects of the ASD system, e.g., appearance, need to maintain a fan, etc.

Generally, any one of the above complications, by itself, could be overcome by suitable design. However, especially when there are multiple problems, the effort required to overcome them could make the ASD system more expensive (or would create a greater aesthetic impact) than would an alternative mitigation approach, such as house pressurization or house ventilation. Of course, the applicability of one of these other approaches would itself depend upon other characteristics of the house, such as the pre-mitigation radon level and the natural ventilation rate of the house (which would determine the effectiveness of house ventilation), and the tightness of the basement (which would impact basement pressurization). Mitigation experience to date suggests that only a few percent of the houses in this country are likely to be truly inappropriate for ASD (Bro90, Mes90b, Sh90, St90, We90).

Where ASD is being considered for a specific house, the applicable variation of the technology is usually selected as follows:

a) In basement houses having sumps with drain tiles, sump/DTD will be one of the first ASD options considered. Sump/DTD will most likely be successful when the drain tiles form a loop inside the footings, or when there is good aggregate beneath the slab regardless of the drain tile configuration. Sump/DTD will least likely be successful when the drain tiles are outside the footings and form only a partial loop (i.e., a loop around fewer that three sides of the house).

b) In basement houses having drain tiles draining to a remote above-grade discharge or dry well, DTD/remote discharge will be one of the first options considered, with the same considerations listed in a) above for the sump/DTD case. It should be anticipated that a supplemental SSD system could turn out to be required, in addition to the DTD system if installed, if the drain tiles form an exterior loop around fewer than three sides of the house.

US EPA ARCHIVE DOCUMENT

c) In any basement or slab-on-grade house, SSD will generally always be one of the first ASD variations considered. Where the house has drain tiles, SSD can be considered as an alternative or supplement to sump/DTD or DTD/remote discharge. The exact design of the SSD system will have to be developed reflecting the degree of sub-slab communication, degree of interior finish, etc.

d) BWD would generally never be installed initially as a stand-alone mitigation method unless prior experience with similar houses in the locality indicated that the block walls were the predominant source and were sufficiently leak-tight (e.g., top voids capped), such that BWD offered clear potential for being the most cost-effective approach in that house. Likewise, unless experience with other similar houses in the locality suggested otherwise, it would generally not be efficient to install a BWD component on a SSD system, until initial operation of the SSD system confirmed that it was not effectively treating the wall-related entry routes and that a BWD component is indeed required.

e) SMD would be the ASD technique used in any crawl-space house, or in the crawl-space wing of a combined-substructure house if that wing is found to need treatment.

The subsections below list in further detail the specific house features which determine when each of the individual ASD variations is likely to be most applicable.

2.2.1 Active Sub-Slab Depressurization

SSD will be most applicable under the following conditions.

- In any house having a concrete floor slab (basements, slabs on grade, and paved crawl spaces).

- In houses having good communication immediately beneath the slab, although houses having poor communication can also be treated. Good communication is most commonly associated with a good layer of aggregate (gravel or crushed rock) under the slab. Poor communication can result from a) lack of, or uneven distribution of, aggregate (combined with a relatively impermeable native soil underlying the slab); or from b) sub-slab obstructions (such as forced-air supply ducts and interior footings or grade beams) which interrupt the aggregate.

  With good communication, design of a SSD system is simplified, with only one or two suction pipes commonly needed, and with flexibility in choosing where the pipes are located. Poor communication does not render SSD inapplicable; however, it does require more care in selecting the number and location of suction pipes, and perhaps also in other design aspects (such as a higher-suction fan). Mitigation performance might still be reduced despite this increased care. Very poor communication (requiring a large number of carefully located suction pipes) combined with extensive interior finish (complicating the siting and installation of pipes indoors) could warrant more serious consideration of mitigation techniques other than SSD, or of installation of the SSD pipes from outdoors. Some obstructions that cause poor communication, such as sub-slab forced-air supply ducts, will sometimes not significantly increase the number of suction pipes required, if there is a layer of aggregate (Fi90, He91a). In such cases, the system may be functioning more by soil gas dilution or by air-barrier shielding (as discussed in Section 2.1), rather than by creating an unambiguous depressurization beneath the slab.

- In houses which a) do not have drain tiles (so that DTD is not an option); or b) which have only a partial loop of tiles outside the footings (so that DTD is likely to leave some portion of the perimeter foundation untreated). However, if sub-slab communication is good, SSD can sometimes still be the best selection even in a house having drain tiles, in cases where the system pipe routing is simplified by avoiding the need to tap into the drain tiles; the extent or condition of the drain tiles is questionable; or rain gutter downspouts, window well drains, or other such drains empty into the drain tiles, making the tiles difficult to seal and depressurize.

- In houses having any pre-mitigation radon concentration (high, moderate, or only slightly elevated).

  SSD is capable of achieving the very high radon reductions required in houses having extremely high pre-mitigation concentrations (e.g., above 100 pCi/L). It (along with DTD, where drain tiles exist) is the most reliable approach available for providing the necessary reductions in any basement or slab-on-grade house requiring more than about 50-75% radon reduction (i.e., any house having pre-mitigation concentrations greater than 8 to 16 pCi/L). The one other approach which appears capable of achieving reductions greater than 50-75%, in addition to ASD, is house pressurization. This technique has been far less well demonstrated than ASD, and is applicable primarily when the basement can be reasonably well isolated from the living area to permit pressurization of the basement. (The presence of forced-air furnace ducting between the basement and the living area could seriously complicate efforts to isolate the two levels.)

  Even when pre-mitigation concentrations are less than 8 to 16 pCi/L, and other less effective techniques can be considered (such as house ventilation and entry route sealing), SSD is still a viable candidate approach. It can be less expensive than some of these other approaches (e.g., air-to-air heat exchangers and extensive sealing efforts), and will commonly provide much greater radon reductions. For example, a house having a pre-mitigation level of 6 pCi/L might be expected to be reduced to 3 pCi/L by a house ventilation approach that doubled the ventilation rate, but could realistically be expected to be reduced to 1 to 2 pCi/L with SSD. This is important if an objective is to achieve near-ambient levels indoors.

- In houses with hollow-block foundation walls as well as poured concrete foundation walls. SSD can also be applicable in houses having fieldstone walls, although there is an increased chance that some other mitigation technique

US EPA ARCHIVE DOCUMENT

will be needed to supplement or replace SSD. While hollow-block walls increase the significance of wall-related entry routes, and thus increase the chance that some additional wall-related treatment might be needed, adequate reductions can commonly be achieved with SSD alone in houses having such walls. If there is reasonably good sub-slab communication, and/or if the SSD suction pipes are located sufficiently close to the walls, SSD often (but not always) appears to adequately reduce or prevent soil gas entry through wall-related routes. In the case of block walls, the system is probably intercepting the soil gas in the vicinity of the footings, reducing or preventing its entry into the void network through mortar joint cracks and other openings near the base of the wall. Depending upon the permeability of the native soil, the suction field may also extend under the footings, possibly treating entry routes on the exterior face of block or fieldstone walls.

Depending upon the nature and significance of the wall-related entry routes, and the ability of SSD to intercept soil gas before it reaches the exterior face of the wall, there are definitely cases SSD does not adequately reduce or prevent entry through wall-related routes. In those cases, SSD will have to be supplemented by some additional wall treatment (e.g., BWD treating selected block walls).

In houses having fieldstone foundation walls, SSD can still be a reasonable choice (or a reasonable component of a combined mitigation system) if the slab is an important entry route. However, if sub-slab communication is poor and if the fieldstone wall is a major entry route, SSD may not be able to develop an adequate suction field or airflow in the soil to intercept the soil gas entering through the wall. In such cases, a technique other than SSD may be needed—basement pressurization, house ventilation, or sealing or isolation/ventilation of the fieldstone wall.

- In houses where at least a portion of the slab is not finished, so that suction pipes can be installed through the slab where required in an aesthetically acceptable manner without disturbing the existing wall, floor and ceiling finish. However, even where the slab is entirely finished, pipes can usually be a) installed in an inconspicuous location (e.g., in closets); or b) concealed behind new finish (e.g., boxed in behind new wall-board); or c) inserted under the slab from outside the living area, as in Figure 2. Some of these steps in finished houses will increase costs, but will often not be so severe as to render SSD inapplicable in practice. Almost all houses have at least some portion of the slab unfinished (e.g., a utility room); where sub-slab communication is good, that limited unfinished space can be sufficient, wherever it happens to be located on the slab.

In summary, SSD can be one of the first options considered in any house having a slab. It can be considered regardless of the sub-slab communication, the pre-mitigation radon concentration, the nature of the foundation wall, or the degree of interior finish. In general, only very poor sub-slab communication, combined with heavy interior finish which limits suction pipe placement (or combined with fieldstone foundation walls), will render SSD impractical on the basis of technical and/or cost considerations. In houses having slabs and no drain tiles (so that DTD is not an option), and having pre-mitigation levels above 8-16 pCi/L, the only other options available besides SSD for achieving post-mitigation levels of 4 pCi/L and less are a) BWD; b) basement/house pressurization; or c) measures involving modifications to the house, e.g., removal of the existing slab and pouring a new slab over a good bed of clean, coarse aggregate. These other options will not always be applicable or practical, either.

2.2.2 Active Sump/Drain-Tile Depressurization

Sump/DTD will be most applicable under the following conditions.

- In any (basement or "slab-below-grade") house having a sump pit with drain tiles entering the sump. Sump/DTD should always be one of the first mitigation approaches considered when a sump with tiles is present. It should be noted that sometimes a sump pit will exist but will not have tiles draining into it; suction on such a sump pit would not be DTD, but rather, would be SSD, with the tile-less sump simply serving as a ready-made hole through the slab.

- In houses where the tiles that drain into the sump form a loop beside the footings that is nearly complete (i.e., on at least three sides of the house). This is especially true if either a) the tiles are outside the footings, and sub-slab communication is good to marginal; or b) they are inside the footings, and the communication beneath the slab is marginal to poor. A nearly complete loop is not important if the tiles are under the slab and if there is good communication immediately beneath the slab. (An incomplete loop would also exist in the case where a portion of a complete loop is damaged or blocked with silt.) Sump/DTD can also be tried as the initial approach even when the loop is not nearly complete and communication is marginal, but there would be an increased chance that this initial installation might subsequently have to be supplemented with a SSD system.

  Where the tile loop is outside the footings, the system will be depending upon extension of the suction field through the native soil beneath the footings, through the block foundation wall, or through below-grade utility channels penetrating the foundation, to treat the sub-slab region. Likewise, the system will be depending upon extension of the field through the native soil to treat sections of the footing where the tile does not exist. Probably for these reasons, the best results with exterior tiles have been observed (with good to marginal sub-slab communication) when the tiles exist on at least three sides of the house (Fi91, Kl92). Similar concerns exist when the tiles are inside the footings, but sub-slab communication is marginal to poor. There have been cases where moderate to high radon reductions (40 to 90+%) have been achieved with exterior loops on less than three sides (Mi87, Sc88, He89, Kl92); the higher reductions with partial exterior

US EPA ARCHIVE DOCUMENT

loops likely have been obtained in cases where the native soil had relatively good permeability.

Where the tiles are inside the footings, and where communication is good, the extent of the tiles is far less significant. Just as a SSD system can perform very well with only one SSD suction pipe when communication is very good, likewise a sump/DTD system can perform well with a limited segment of drain tile when communication is good.

- In houses without potential major soil gas entry routes remote from the perimeter walls, in cases with exterior drain tiles. Such remote entry routes could include, for example, interior load-bearing walls (especially hollow-block walls) or fireplace structures which penetrate the slab and rest on footings underneath the slab; and interior expansion joints in the slab. While the suction applied to an exterior loop of tiles has been shown to extend under the slab (Fi91, KI92), this extension may be weaker than that with SSD or with interior tiles. The perimeter foundation walls and wall/floor joint are receiving the strongest treatment; these perimeter entry routes are commonly the major ones (especially with block walls), so that effective treatment of these routes is often sufficient where there are not major interior entry routes. Where there are interior routes remote from the perimeter, these routes will provide the system with an increased challenge. Available data suggest that, if the exterior loop is complete and if the fan performance is sufficient, DTD on exterior loops can produce significant reductions in indoor radon in houses with such interior entry routes, especially if the sub-slab communication is good and/or if the permeability of the native soil is relatively good. However, the risk of reduced performance is increased.

- In houses having any pre-mitigation radon concentration (high, moderate, or only slightly elevated). In view of the high radon removals and the moderate cost of sump/DTD systems, they can be considered for treating any pre-mitigation level, as discussed for the case of SSD in Section 2.2.1.

- In houses having any type of foundation wall (block, poured concrete, or fieldstone), as discussed for SSD in Section 2.2.1.

- In houses where the area over the slab is largely finished living space. The installation can generally be confined to the area immediately over the sump, if the suction pipe taps into the sump. If the suction pipe taps into the tiles at a point remote from the sump, the installation will be confined to that one point around the perimeter, which can be selected to minimize the impact; if the tiles form an exterior loop, this point will be outdoors. Thus, in houses having moderate to poor sub-slab communication, so that a SSD system would require multiple suction pipes, it is likely that a sump/DTD system can be installed with a less significant aesthetic impact or with less significant modifications to the existing finish, compared to SSD.

- In houses where extensive wall finish or other obstructions do not hinder installation of a suction pipe into the sump or into the perimeter tiles remote from the sump. If access to the sump and tiles is constrained, and if there is good sub-slab communication, SSD may be preferred over sump/DTD even in cases where a sump with a nearly-complete loop of tiles is present.

- In houses where the drain tiles do not become flooded, i.e., where the sump pump is operating properly. If the drain tiles become blocked with water, the suction being drawn by the fan will not be distributed around the tile loop.

In some cases, there will be some uncertainty whether the tiles around a given house form a complete loop, or whether they are partially silted shut, or whether they are inside or outside the footings. In such cases, judgement must be used. If there is a reasonable likelihood that the tiles go around three sides of the house, the advantages of the sump/DTD approach might make it cost-effective to attempt before proceeding to SSD or some other approach, especially if only moderate radon reductions (50 to 85%) are required.

As indicated above, there will be cases where SSD may be the most applicable technique for a given house, rather than sump/DTD, even in cases where a sump and a complete loop of tiles is present. These cases include, for example, houses where the sump or tiles cannot be conveniently accessed, or houses where there is a drainage problem.

2.2.3 Active Drain-Tile Depressurization (Above-Grade/Dry-Well Discharge)

DTD/remote discharge will be most applicable under the following conditions.

- In any (basement or "slab-below-grade") house having drain tiles draining to an above-grade discharge or dry well. DTD/remote discharge should be one of the first mitigation approaches considered when a such a drain tile system is present.

- In houses where the drain tiles form a loop beside the footings that is nearly complete (i.e., on at least three sides of the house), if either a) the tiles are outside the footings, and sub-slab communication is good to marginal; or b) if they are inside the footings, as will commonly be the case with remote discharge, and the communication beneath the slab is marginal to poor. If the tiles are under the slab and if there is good communication immediately beneath the slab, it will be sufficient if the tiles form only a partial loop (less than three sides of the house) or form some other pattern. Partial exterior loops may be sufficient in cases where the permeability of the native soil is relatively good. The rationale for this criterion is as described previously in Section 2.2.2, for the sump/DTD case.

- In houses without potential major soil gas entry routes remote from the perimeter walls, in cases with exterior drain tiles, as discussed in Section 2.2.2.

US EPA ARCHIVE DOCUMENT

- In houses having any pre-mitigation radon concentration (high, moderate, or only slightly elevated), as discussed for in Sections 2.2.1 and 2.2.2.

- In houses having any type of foundation wall (block, poured concrete, or fieldstone), as discussed for SSD in Section 2.2.1.

- In houses where the area over the slab is heavily finished living space. Because the DTD/remote discharge system is usually installed entirely outside the house, this system will tend to be less expensive and less obtrusive than other approaches that could necessitate modifications in the finished space.

- In houses where the drain tiles do not become flooded, for the reason discussed in Section 2.2.2. Flooding would be most likely in cases where the tiles drain to a dry well.

2.2.4 Active Block-Wall Depressurization

BWD applies only to houses having hollow-block foundation walls. Among block-wall houses, BWD will be most applicable under the following conditions.

- In houses where a SSD system has already been installed, and where post-mitigation diagnostic testing and indoor radon measurements indicate that this SSD system is not adequately reducing radon entry through the block walls.

  BWD systems, as stand-alone installations (i.e., without a SSD component), have generally proven less effective and less consistent than SSD systems. Therefore, a SSD system will often be the first choice, with a BWD component being added only if the SSD system by itself proves unable to adequately reduce wall-related entry. Where post-mitigation diagnostics indicate that the initial SSD system is not adequately reducing radon concentrations inside the block walls, a combined SSD+BWD system may either be required, or may be preferable to the possible option of adding additional SSD pipes near the walls.

  It can be difficult to predict the need for a BWD supplement prior to the installation of the initial SSD system; as a result, the BWD component may often be added following the initial installation. SSD systems may sometimes treat wall-related entry through interception of the soil gas before it enters the void network, rather than by actually creating a measurable depressurization within the block cavities. As a result, if pre-mitigation sub-slab suction field extension measurements are conducted using a diagnostic vacuum cleaner, failure of the vacuum cleaner to create measurable depressurization inside the cavities might not necessarily mean that an operating SSD system will not adequately reduce radon entry through the walls. In addition, high radon concentrations in the walls prior to mitigation might well not reflect the concentrations that will exist after a SSD system begins operation. Thus, the ability to use pre-mitigation diagnostics to foresee when a SSD system will need to be supplemented by a BWD component will depend upon experience in a given locale, where trends may become apparent of the conditions under which a BWD component is typically required.

- In houses where one or more of the block walls is a particularly important entry route, especially in cases where sub-slab communication is sufficiently poor such that it will be more difficult for a SSD system to address this wall-related entry. Notwithstanding the fact that SSD will usually be the first technique of choice, as discussed above, many mitigators can relate experiences where a stand-alone BWD system treating one or two selected walls proved to be extremely effective.

- In houses where there are no major openings in the block walls, or where the openings are accessible for reasonably convenient closure. This includes not only the perimeter foundation walls, but also any interior block walls which are to be treated by the BWD system, and which penetrate the slab and rest on footings underneath the slab. Block walls are commonly so leaky that large amounts of air are drawn through the walls and into the BWD system from the basement (assuming a basement house, the substructure to which BWD is most commonly applied). In addition to creating a significant house heating/cooling penalty, this leakage makes it very difficult to maintain a suction field inside the wall cavities, potentially resulting in radon reductions which are insufficient and unpredictable, and which are variable over time. It is impractical to make a block wall air-tight; even painting the wall to close the block pores and hairline mortar joint cracks would not make the wall air-tight, and such extensive effort is not generally required for BWD to be reasonably successful. However, it is crucial that major openings not be present in the wall to be treated, or, if present, that they be closed.

  In particular, BWD treatment of a wall will most likely be successful in cases where

  - a course of solid cap block closes the top of the wall. Or, if there is no solid cap block, the open voids in the top course are accessible for effective closure.

  - there is no fireplace or chimney structure built into the wall, potentially concealing routes for air leakage and soil gas entry.

  - there is no exterior brick veneer, concealing a gap between the veneer and the interior block or sheathing through which air can flow down into the void network.

  - the block does not have particularly high porosity, since high porosity facilitates air flow through the face of the block. True cinder block (as distinguished from concrete block) is often highly porous. Concrete block, which is much more common than cinder block, will occasionally have higher-than-normal porosity when there is a reduced amount of cement present in the mix from which the blocks were fabricated. Particularly porous blocks are characterized by more sharply-de-

US EPA ARCHIVE DOCUMENT

fined grains of aggregate on the surface, deeper pits between the grains, and a rougher texture. In less porous blocks, these features are more smoothed out by the cement.

- the wall is reasonably integral, and does not contain an excessive number of wide mortar joint cracks or missing mortar. (All walls will have some hairline mortar joint cracks.)

- In houses where the block wall is reasonably accessible, i.e., is not covered with sheetrock or panelling, and is not otherwise blocked. Effective treatment of a wall will require one or more individual pipes penetrating that wall, or a baseboard duct running the length of the wall. If the wall is difficult to access, this can add significantly to the installation cost.

- In houses where there are no obvious major slab-related soil gas entry routes remote from the wall, in cases where BWD is being considered as a stand-alone method without SSD. EPA data (He87, Fi91) indicate that BWD by itself can create a weak suction field beneath the slab, potentially treating some slab-related entry routes remote from the wall. However, this suction field will not always extend effectively under the slab, even if the wall openings are effectively closed. Thus, houses with badly cracked slabs, for example, would not be good candidates for BWD, except in conjunction with SSD.

- In conjunction with SSD, individual-pipe BWD is applicable in houses having any pre-mitigation radon concentration (high, moderate, or slightly elevated), as discussed in Section 2.2.1. When used in conjunction with SSD, the BWD treatment can some-times be limited to perhaps one or two walls which diagnostics indicate are the major entry routes not being treated by the SSD system. The likely moderate cost of such a SSD+BWD system, combined with its high effectiveness, makes it a good candidate even when only a moderate degree of radon reduction is required.

  As a stand-alone technique, however, BWD can sometimes be more expensive, if all walls must be treated. This could limit its applicability to houses having pre-mitigation concentrations greater than 8 to 16 pCi/L, where the required level of reduction would be sufficient to justify the increased system cost.

  The increased costs result from the possible need to treat all walls in the stand-alone case rather than just one or two, which increases the cost of pipe/duct installation and of wall sealing. In the case of the baseboard duct BWD variation, installation of the baseboard duct around the entire perimeter has consistently made this the most expensive ASD approach. The average installation cost of the baseboard variation according to EPA's survey was $1,588 (Ho91), compared to $1,135 for SSD, although costs above $2,000 could be anticipated in some cases. In the case of the individual-pipe BWD variation, the average cost reported in the survey was $1,045; this cost is somewhat less than that of SSD, suggesting that not all of the walls may have had to be treated by some of the respondents to the survey. EPA's experience has indicated that where any significant closure of wall openings is required (e.g., closure of open voids in the top course of block), and where all walls must be treated, the labor involved will almost always result in an installation cost greater than the average reported in the survey.

- In houses of any substructure where the block foundation walls can provide an entry route into the living area. BWD has most commonly been used in houses having basements. However, on occasion, BWD components have also been found to be an important addition to SSD installations in slab-on-grade houses, in some cases where open voids on the top of the stem foundation wall (at slab level) provided access to the living area. No data have been found defining experience with BWD in crawlspace houses having block foundations.

- The baseboard duct BWD approach would best be considered in houses having a perimeter channel drain (sometimes referred to as a "canal" drain or "French" drain) around the perimeter wall/floor joint. SSD would still be one of the first mitigation approaches considered, even where a perimeter channel drain is present. However, the drain should be closed in an appropriate manner, as discussed in Section 4.7.1, in order to ensure effective, reliable performance of the SSD system and to reduce the heating/cooling penalty; this closure will increase the cost of the SSD system. Application of the baseboard duct BWD approach where a perimeter channel drain is present covers the drain, a step which is likely to be required regardless of the mitigation approach used, while a) taking advantage of this ready-made access under the slab to provide sub-slab treatment around the entire slab perimeter; and b) uniformly treating the wall voids close to the footing region. When used as a stand-alone technique, baseboard duct BWD over a perimeter channel drain is in fact a combination of SSD and BWD.

2.2.5 Active Sub-Membrane Depressurization

SMD will be most applicable under the following conditions:

- In houses having dirt-floored crawl spaces (including dirt floors covered with gravel or a vapor barrier), or in basement houses where a portion of the basement has a dirt floor. SMD has consistently been found to be the most effective approach for reducing radon concentrations in houses with dirt-floored crawl spaces (Fi90, Py90), although not necessarily the least expensive; it should always be one of the first approaches considered for such houses. Crawl spaces having concrete slab floors would generally be treated using SSD. Crawl spaces having concrete wash floors (i.e., floors consisting of an unfinished layer of concrete about 2 in. thick or less) may be treated using SMD if the concrete wash is too badly cracked to enable SSD.

- In crawl-space houses where the crawl space is reasonably accessible, i.e., has adequate headroom, a reason-

US EPA ARCHIVE DOCUMENT

ably level floor, and limited obstructions (such as furnace and water heater, interior load-bearing walls and support piers, storage, etc.). It has been found that complete coverage of the crawl-space floor with the plastic membrane, and sealing the membrane at all junctions, are often not necessary. Thus, inability to access some limited portion of a crawl space due to one or more of the above problems does not necessarily render SMD inapplicable. However, SMD will provide its best performance when the crawl space is entirely or largely accessible. SMD will be inapplicable in crawl spaces which are largely or completely inaccessible (e.g., "suspended floors," which sometimes provide no more than 12 in. of headroom anywhere in the "crawl space," and which sometimes have no access to the "crawl space").

- In crawl-space houses where natural crawl-space ventilation (opening foundation vents) is not an option for radon reduction, i.e., in houses where radon reductions of more than about 50% are required in the living area, or where cold winters and the presence of water pipes in the crawl space complicate or discourage the use of natural ventilation.

  Available data (Na85, Tu87, Fi89, Py90, Py91, Fis92) suggest that the living-area reductions achievable by opening foundation vents are variable, and typically no greater than about 50%. Thus, where greater reductions are required, natural ventilation is not a reliable option. Even where reductions no greater than 50% are needed to achieve, for example, 4 pCi/L in the living area, SMD could still be a desirable option, since it could provide even greater reductions and thus reduce living area concentrations to even lower values.

  Also, in cold climates, open vents could result in water pipe freezing in the crawl space, and cold floors in the living area above. While the pipes can be insulated, these difficulties might discourage some homeowners from using natural ventilation on a year-around basis.

- In crawl-space houses where crawl-space depressurization is less likely to be a viable radon mitigation option, i.e., in houses where the crawl space is not well-isolated from the outdoors and/or from the living area, or where there are combustion appliances (such as a gas-fired furnace) in the crawl space.

  Crawl-space depressurization has consistently been found to be second only to SMD in effectiveness for reducing radon levels in crawl-space houses (Fi89, Fi90, Py90, Py91, Tu91c). It is less expensive than SMD to install, but it is commonly more expensive to operate because it generally draws a greater amount of treated house air out of the living area.

  Crawl-space depressurization will be most effective in cases where the crawl space is well isolated, i.e., where the perimeter walls are relatively tight, and where the flooring between the crawl space and the overhead living area (or the wall between the crawl space and any adjoining basement) are relatively tight. Where the crawl space is not well isolated, there is an increased chance that a) crawl-space depressurization will not be able to effectively depressurize the crawl space, and will thus not be able to provide effective radon reductions at reasonable exhaust fan capacity; b) the amount of treated house air drawn down from the living area will be high, thus increasing the heating and cooling penalty associated with crawl-space depressurization; and/or c) the installation cost of the crawl-space depressurization system will be increased, due to the effort required to provide the needed isolation. Poor crawl-space isolation thus would tend to make crawl-space depressurization less competitive with SMD. Features that tend to make the crawl space less tight include forced-air heating ducts penetrating the flooring between the crawl space and the living area, other unclosed openings through the flooring, absence of a wall separating the crawl space from an adjoining basement, and the presence of foundation vents.

  However, even where the crawl space is relatively tight, SMD will commonly provide greater radon reductions at lower exhaust flows (i.e., lower heating/cooling penalty). Thus, SMD should always be considered, even where the house may be amenable to crawl-space depressurization.

  The presence of combustion appliances in the crawl space could make crawl-space depressurization inapplicable, due to concerns that that approach could cause back-drafting of the appliances.

- In crawl-space houses having either hollow-block or poured concrete foundation walls. In the relatively limited testing to date in crawl-space houses, there has been no clear indication that possible radon entry into the crawl space or living area via the void network inside block walls presents a problem that cannot be treated by SMD. To be safe, when treating crawl-space houses having block foundations, some mitigators design the SMD system in a manner to increase its likelihood of treating the wall cavities.

2.3 Performance of Active Soil Depressurization Systems

This section reviews the experience to date with each of the ASD variations, to suggest the performance that might be expected with these techniques under various conditions. Available results are summarized from research, development, and demonstration projects, and from the experience of commercial radon mitigators.

The subsequent discussions for each ASD variation will address the current understanding of the effects of the following classes of variables on system performance:

a) House design variables, including, for example, sub-slab communication, forced-air ducts and other obstructions under the slab, the nature of any drain tile loop, foundation wall material of construction, house size, presence of an adjoining wing on the house, presence of major/inaccessible radon entry routes, and crawl-space features, such as accessibility and nature of the floor.

b) House operating variables, including, for example, the characteristics of the heating/ventilating/ air conditioning (HVAC) system, and the operation of any exhaust fans.

c) Mitigation system design variables, including, for example, the number, nature, and location of SSD suction pipes, the nature of any suction pit excavated under the slab where the SSD pipes penetrate, the degree of slab sealing carried out in conjunction with ASD installation, configuration of the SMD system in the crawl space, etc.

d) Mitigation system operating variables, including, for example, the capacity of the suction fan.

e) Geology and climate variables that could influence system operation and performance, e.g., the source strength (or the concentration of radon in the soil gas), the permeability of the underlying native soil, and weather conditions that could influence radon entry (temperature, winds, precipitation).

Much of the information summarized here has become available since the second edition of this document was published in January 1988 (see Section 5 in Reference EPA88a). While EPA88a accurately indicates the general performance of (and confidence in) these systems, there is now a broader and more extensive understanding of the conditions which influence system performance.

2.3.1 Active Sub-Slab Depressurization

Active SSD has been one of the most widely used radon reduction techniques. While there is not an accurate count of the number of SSD installations that have been made over the past six years, the number appears to be greater than ten thousand (Ho91). Such systems have been installed throughout the United States, and in some other countries.

SSD systems have consistently provided radon reductions of 80 to 99%, except in cases where sub-slab communication was extremely poor, where well water was a significant contributor to airborne radon concentrations, or where certain design problems arose. In some cases, a BWD or SMD component had to be added to the SSD system to achieve these high reductions. The highest percentage reductions are obtained when the pre-mitigation level is highly elevated. Because the system can never reduce indoor concentrations below outdoor levels (which average roughly 0.4 pCi/L around the country), a SSD system could not achieve percentage reductions as great as 90% when pre-mitigation levels are in the range of 4 pCi/L.

The EPA research, development and demonstration program has tested SSD (sometimes in combination with other ASD variations) in a total of 85 basement houses, representing a range of house design and geology/climate variables (He87, Mi87, Sc88, Fi89, He89, Ni89, Tu89, Du90, Gi90, Mes90a, Py90, Du91). These 85 houses had pre-mitigation values ranging from a low of about 10 pCi/L, to a high of over 1,000 pCi/L. Over 80% of these houses were reduced to post-mitigation values below 4 pCi/L in the basement (and typically even lower values upstairs); over 50% were reduced to 2 pCi/L and less, and about 25% were reduced to 1 pCi/L and less. Those houses still above 4 pCi/L remain elevated due to one or more of the following reasons: extremely poor sub-slab communication; re-entrainment of SSD exhaust back into the house, in some cases where the radon concentrations in the exhausts were dramatically elevated (Mi87, Fi91, He91d); and contributions to the airborne levels from radon in the well water (Ni89, Fi91, He91d). The re-entrainment problem can be addressed through additional care in the design of the system exhaust; the problem with the well water would require that a water treatment step be installed. The problem of very poor communication may be more difficult to address, with possible solutions including the addition of more suction pipes, increasing the fan capacity or making other changes in system design, adding, for example, a BWD component, or attempting another mitigation approach, such as basement pressurization.

The percentage of these basement houses that were reduced to 2 pCi/L and less could presumably also be increased by further improvements on the current SSD installations. At the time that many of these installations were made early in the program, efforts commonly stopped once the ability to achieve EPA's initial guideline of 4 pCi/L was demonstrated.

The post-mitigation measurements reported for the 85 basement houses represent a range of measurement methods and durations, ranging from several-day measurements with continuous monitors and charcoal detectors, to 3- to 12-month alpha-track detector measurements. Thus, some of these measurements better represent the long-term performance of these SSD systems than do others. However, it is clear that, overall, the SSD systems are being very effective.

The EPA program has tested SSD in 40 slab-on-grade houses, representing a range of house and geology/climate variables (Fi89, Fo89, Fi90, Gi90, Mes90a, Roe91, Tu91b, Tu91c, Fo92). These 40 houses fall into two categories: 11 represent the mid-Atlantic coast and the Midwest (Fi89, Fi90, Gi90, Mes90a), and are characterized by a good layer of aggregate under the slab; the remaining 29 represent Florida and the Southwest (Fo89, Roe91, Tu91b, Tu91c, Fo92), and are characterized by low-permeability packed sand (and/or clay) under the slab, generally with no aggregate. The pre-mitigation indoor levels ranged between 7 and 30 pCi/L at all locations, except for nine of the Florida houses (Fo89, Roe91, Fo92), where some individual pre-mitigation readings were as high as 40 to 100 pCi/L.

Of the EPA slab-on-grade study houses having good aggregate, one- or two-pipe SSD systems were sufficient to reduce all 11 of them below 4 pCi/L, 10 of them to 2 pCi/L and less, and 7 of them (almost two-thirds) to 1 pCi/L and less. These reductions were achieved despite the presence of sub-slab forced-air heating supply ducts, disrupting the communication beneath the slabs in a number of the houses. However, of the 29 houses in Florida and the Southwest with poor sub-slab communication, only 19 of these houses (about two-thirds) have to date been reduced to 4 pCi/L and less, despite the use of multiple suction pipes (as many as nine pipes in one Florida house). These 19 houses reduced to 4 pCi/L and less represent 5 of the 6 of New Mexico houses, and 14 of the 23 Florida

US EPA ARCHIVE DOCUMENT

houses. Seven of the 29 houses (about one-quarter) have been reduced to 2 pCi/L and less, and only two (both in New Mexico) have been reduced to 1 pCi/L and less, based upon short-term measurements. The apparent conclusion is that, where a good aggregate layer exists, relatively simple SSD systems can provide excellent reductions in slab-on-grade houses, despite sub-slab obstructions. But where the material directly under the slab is a low-permeability packed sand/clay, more extensive SSD systems will be needed, and residual (post-mitigation) radon levels will tend to be higher. The difficulty experienced in achieving residual levels below 2 to 4 pCi/L in the Florida houses could also be in part due to the higher pre-mitigation values in some of these houses.

This experience with SSD in basement and slab-on-grade houses under the EPA R,D&D program is also generally reflected in the experience of other researchers (Er84) and commercial mitigators. Respondents to EPA's mitigator survey (Ho91) indicated that SSD (or, where appropriate, DTD), sometimes in conjunction with sealing, is the technique used in about 90% of basement and slab-on-grade houses. In a New Jersey survey (DeP91), 75 to 85% out of almost 1,200 commercial installations surveyed in that state were found to involve SSD. In addition, discussions with a number of mitigators who have installed 250 mitigation systems or more apiece, confirm that SSD is very effective over a broad range of applications (Bar90, Bro90, Mes90b, Sh90, St90, We90). According to these mitigators, one- or two-pipe SSD systems are sufficient in a large majority of the houses mitigated. For some more difficult basement and slab-on-grade houses (as few as 10 to 20% of the total in some geographical locations), three, four, or more suction pipes are required in order for SSD to be effective, or a BWD component is required. In only about 1% of the houses treated by these mitigators were conditions so unfavorable that SSD was practically not applicable; these cases usually involved extremely poor sub-slab communication (such as wet clay under the slab), high degrees of interior finish, irregular house configurations, and additions to the house.

The following discussion summarizes the results to date, as they address each of the house, mitigation system, and geology/climate variables that can influence system design, operation, and performance.

a) House design variables

- ***Sub-slab communication.*** Numerous studies in both basement and slab-on-grade houses having good communication (Tu89, Du90, Fi89, Gi90, Mes90a, Fi91), as well as commercial experience, have consistently demonstrated that such houses can be reduced below 4 pCi/L, and generally below 2 pCi/L, with only one or two suction pipes. "Good communication" generally coincides with a layer of aggregate beneath the slab. (See definition of "aggregate" in the Glossary.) Where communication is poor (Fo89, Tu89, Py90, Du91, Fi91, Roe91, Tu91b, Fo92), reductions below 4 pCi/L are still commonly achieved, but generally require more suction pipes and more careful pipe placement to ensure that an adequate suction field is established everywhere beneath the slab. Ability to reliably achieve 2 pCi/L and less is not well demonstrated in poor-communication houses.

- ***Nature of foundation wall.*** In a majority of basement houses where sub-slab communication is good, SSD performance appears generally similar regardless of whether the foundation wall is constructed of poured concrete or of hollow block (He87, Gi90). Often, any reduced performance observed in block-foundation basement houses relative to poured-foundation houses appears small, perhaps even within the uncertainty of the radon measurements (He87). However, there will be some percentage of cases where SSD clearly is not adequately treating the entry routes associated with block walls, and a BWD component will be required, or will be more practical than attempting to address the wall entry routes through more SSD pipes (He87, Sc88, Ni89, Tu89, Py90, Sh90). The potential need to add a BWD component appears to be greatest when sub-slab communication is poor, hindering interception of soil gas by the SSD system before it enters the void network. In infrequent cases, presumably where the walls are particularly important radon sources, wall treatment has sometimes been required even when communication has been reasonably good, and when the SSD system has appeared to be effectively depressurizing the entire sub-slab (Section 7.3 in Fi91).

An attempt was made to study the effect of the foundation wall on SSD performance in slab-on-grade houses in Ohio having good sub-slab aggregate (Fi90, He91a). As it turned out, any effect of wall material could not be separated out from the effect of house size, because all of the large houses (generally greater than 1,700 ft^2) had block foundations, and all of the small ones (less than 1,400 ft^2) had poured concrete. All of the smaller houses with poured foundations were reduced from pre-mitigation levels of 13 to 30 pCi/L down to 1 pCi/L and less with one suction pipe. However, the larger, block-foundation houses were usually reduced only to within the range of 1 to 3 pCi/L, and sometimes required two suction pipes to reach that range. The one small (1,100 ft^2) house with a block foundation did perform more poorly than the small poured-foundation houses, achieving only 1.5 to 2.5 pCi/L with one suction pipe. One slab-on-grade house with good aggregate tested in Maryland (Mes90a) had a block foundation and was larger than any of the Ohio houses, yet was reduced from pre-mitigation levels of 7 to 16 pCi/L down to below 1 pCi/L with only one SSD pipe, comparable to the Ohio poured-foundation houses. This Maryland house had styrofoam insulation board on the interior face of the foundation wall below the slab, possibly reducing the short-circuiting of outdoor air into the system through the wall and thus contributing to the good performance. (In all of the houses, the slab was elevated above grade by 6 to 12 inches in at least some locations around the perimeter, creating the possibility that outdoor air could leak into the system through the walls.)

From the above data, it appears that air leakage into the system via the block walls *might* be contributing (along with house size) to reduced SSD performance in slab-on-

US EPA ARCHIVE DOCUMENT

grade houses having good aggregate. This effect could be reduced when there is insulation board inside the block foundation. Any detrimental effect of the block walls does not appear adequate to prevent achieving levels below 4 pCi/L with one to two suction pipes in slab-on-grade houses with good aggregate, even when sub-slab forced-air supply ducts are present, and even when the suction pipes are placed near the perimeter. However, wall effects could increase the number of pipes required to achieve near-ambient indoor levels in block-foundation houses. The relatively small effect of the block foundation in the good-aggregate case might be attributed to adequate extension of the suction field beneath the slab, through the aggregate, despite any leakage of outdoor air that might be occurring through the foundation walls.

But in slab-on-grade houses in Florida, where sub-slab communication is often very poor, block walls appear to have a more significant impact on SSD performance. In one house (House C4) where SSD suction pipes were tested both toward the slab interior and near the slab perimeter, pre-mitigation indoor levels of 38 to 67 pCi/L were reduced to 5.5 pCi/L by the operation of two suction pipes toward the interior of the slab, but only to 9.4 pCi/L by two pipes near the perimeter (according to 3- to 4-day continuous radon monitor measurements) (Fo92). The poorer performance with the perimeter pipe locations is presumably due to outdoor air short-circuiting into the system via the walls, which commonly extend perhaps 12 in. above grade. In a second house (House C1), originally at 40-70 pCi/L, four interior pipes generally reduced indoor levels to 2.2-3.4 pCi/L, whereas five perimeter pipes achieved a level of only 4.5 pCi/L. In a third house (C5), originally at about 20 pCi/L, two interior pipes reduced levels to 8.0 pCi/L, whereas two perimeter pipes achieved only 11.0 pCi/L. This wall effect is confirmed by measurements in test slabs and by computer modelling (Fu91). Where communication beneath the slab is very poor, the impact of air leakage into the system through block walls might be expected to have a more visible effect.

Not all slab-on-grade houses having very poor communication and block foundations have exhibited the same difficulties encountered in the Florida houses. Three such houses were tested in New Mexico (Houses AL02, AL03, and AL04 in Tu91b). Two of these houses have been reduced below 4 pCi/L with one to three suction pipes, and one has been reduced below 2 pCi/L, despite placement of the pipes near the perimeters. This difference in achievable radon levels between the Florida and New Mexico houses may be due to better suction field extension around the foundation or through the underlying soil in New Mexico resulting from the geology or dry climate in the Southwest, or resulting from local construction practices (e.g., the presence of insulation board around the foundation in some cases). It could also result, in part, from the fact that the pre-mitigation levels in New Mexico were lower, 7 to 18 pCi/L in these three houses, compared to levels up to 103 pCi/L in a few of the Florida houses.

With either basement or slab-on-grade houses having block foundation walls, another wall-related variable which could influence the performance of SSD alone is whether the voids in the top course of block were capped during construction. If the top voids are capped, there is an increased likelihood that better reductions will be achieved with fewer SSD pipes, and that a BWD component will not be needed in the ASD system. In basement houses, the closure of the top voids during construction would be apparent from the presence of a solid cap block as the top course. In slab-on-grade houses, the closure would take the form of either a) a solid top block (which could be an L-block), with the slab poured inside the stem wall (or to the notch in the L); or b) the slab poured on top of the stem wall, closing the top cavity. The nature of block stem wall in a slab-on-grade house can be difficult to determine.

- ***House size.*** Where there is a good layer of sub-slab aggregate and where there are no complicating factors, one or two SSD pipes have sometimes treated residential basement slabs and slabs on grade as large as 1,850 to 2,700 ft^2, reducing indoor levels to 1 to 2 pCi/L and less (Fi89, Fi90, Mes90a). Such reductions in such large houses have sometimes been observed even where some complicating factor is present (e.g., sub-slab forced-air supply ducts, very high pre-mitigation concentrations, or block foundation walls, as discussed above). Where such complicating factors are present, one or two pipes will commonly be sufficient to reduce large houses to 3 to 4 pCi/L and less, if not below 1 to 2 pCi/L (Fi90, Mes90a), when there is good aggregate. In such cases, house size is not a significant variable.

  Underscoring this conclusion from residential testing, tests on large slab-on-grade schools and commercial buildings have demonstrated that where communication is good and there are not sub-slab obstructions, a single suction pipe (and a properly sized fan) can be sufficient to treat slab areas as great as 50,000 ft^2 (Cr92b). No house would be anywhere near this size.

  But where sub-slab communication is not good, large house slabs will require a greater number of suction pipes located properly in order to provide sufficient suction field extension.

- ***Adjoining wings.*** In basement houses having an adjoining slab-on-grade or crawl-space wing, a SSD system treating the basement slab alone, without direct treatment of the adjoining wing, is sometimes sufficient to provide the needed radon reductions throughout the entire house (Sc88, Fi89, Mes90a). The adjoining wing is most likely to also require direct treatment when a) the adjoining wing provides important entry routes, and has distinctly elevated soil gas radon concentrations under its foundation; and b) communication beneath the basement slab is poor, hindering the extension of the basement suction field under the adjoining wing, and hindering interception of soil gas before it reaches the foundation of the adjoining wing (Mes90a).

- *Sub-slab obstructions.* Obstructions can be present under the slabs in basement and slab-on-grade houses which could potentially interrupt suction field extension even in cases where aggregate is present. Such obstructions include footings supporting interior load-bearing walls, grade beams, sub-slab forced-air supply or return ducts, and sunken living rooms in slab-on-grade houses.

  Testing in seven slab-on-grade houses in Ohio having sub-slab forced-air supply ducts has indicated that, where a good layer of aggregate exists, SSD performance is not dramatically reduced by such ducts, even though sub-slab depressurization measurements suggest that the ducts are interrupting suction field extension (Fi90, He91a). The ducts did appear to increase the likelihood that two suction pipes would be required to reduce the house below 4 pCi/L, and that the fan would have to be operated at full capacity. However, even the largest house in the Ohio project (2,600 ft² slab) was reduced below 2 pCi/L with two suction pipes (89% reduction), despite sub-slab ducts. In one large (2,700 ft²) slab-on-grade house in Maryland having sub-slab supply ducts and good aggregate, levels were reduced below 1 pCi/L (over 90% reduction) with a single suction pipe (Mes90a).

  Even in one 1,900 ft² slab-on-grade house (House AL04) in New Mexico having no aggregate (slab resting directly on dry sand/clay soil), the house has been reduced to 1 to 2 pCi/L (a reduction of about 85%) with only three SSD pipes despite the presence of sub-slab supply ducts (Tu91b). In one other house with sub-slab supply ducts and no aggregate (House AL02, having a slab of 2,000 ft²), levels were reduced below 4 pCi/L with only one pipe; however, these post-mitigation levels tend to spike with decreases in barometric pressure, for reasons that may or may not be associated with the sub-slab ducts.

  More data would be required in poor-communication houses before a conclusion could be drawn regarding how consistently the degree of success seen with sub-slab ducts in the New Mexico project might be expected in other such houses. In addition, no data exist on SSD performance in houses having forced-air return ducts under the slab (with or without aggregate). Since return ducts operate at low pressure, they would be competing with the SSD system for the soil gas, and would provide SSD systems with a greater challenge than do supply ducts.

  There is not a definitive data base available on the effects of the other types of obstructions under house slabs. In the testing of SSD systems in large slab-on-grade school buildings, which are more likely than houses to have interior footings and grade beams, experience has been that, even when aggregate is present, slab treatment by a given SSD pipe will not reliably extend past an interior footing supporting an interior block load-bearing wall which completely bisects the slab (Cr91). However, in testing in houses where such an interior footing commonly appears in the form of a stem wall separating a basement from an adjoining slab-on-grade wing, suction on the basement slab alone has been found adequate to treat the adjoining slab on grade when there is good aggregate, as discussed previously (Mes90a). This effect might sometimes be due to interception of soil gas before it reaches the slab-on-grade foundation, and not always to a measurable extension of the basement suction field into the aggregate beneath the slab on grade. The permeability of the underlying native soil could also play a role. Where aggregate is present, grade beams (thickened slabs) are likely to be poured on top of the aggregate, so that suction fields have been observed to extend past grade beams (Cr91). The effect of interior footings and grade beams on SSD systems will likely depend upon the permeability of the underlying soil, to permit the suction to extend under the interior obstruction.

  Where sub-slab communication is poor, it would be anticipated that interior obstructions would generally create a more serious problem than they do in the good-communication case.

b) House operating variables

- ***Operation of central furnace fan, and exhaust fans.*** Operation of a central furnace fan in a basement house, when the cold air return ductwork is in the basement, has been found to cause incremental increases in basement depressurization typically ranging between 0.002 and 0.02 in. WG (Mi87, Ha89, Hu89, Ma89b, Tu89, Tu90). Similar increases in depressurization have been observed in rooms within slab-on-grade houses, when cold air returns are in those rooms (Cu92). This depressurization results because the low-pressure cold air return ducting is typically very leaky, so that the central fan is withdrawing significant amounts of air from the basement and distributing most of it to other locations in the house. Various exhaust fans in basement houses have been found to be creating increases in basement depressurization ranging from 0.001 to 0.02 in. WG for clothes driers (Mi87, Ma89b, Tu90), 0.004 to 0.008 in. WG for a whole-house fan (Tu90), and 0.008 to 0.02 in. WG for an attic fan (Tu90). Again, similar increases in depressurization have been observed in the living area of slab-on-grade houses from operation of such exhaust fans (Cu92).

  SSD systems can be designed to develop sufficient sub-slab depressurizations during cold weather with the exhaust appliances off, so that the system will nominally not be overwhelmed by these additional basement depressurizations when the appliances come on. Where a good layer of aggregate exists, sub-slab depressurizations sometimes well in excess of 0.01 to 0.02 in. WG can be maintained under most or all of the slab by one or two suction pipes, during cold weather with the appliances off (e.g., Gi90, Mes90a, Fi91). Where there is not an aggregate layer, more suction pipes would be required to maintain sub-slab depressurizations that great, and it is more important to locate the pipes near the entry routes (especially the wall/floor joint) to help ensure that the depressurization extends to those entry routes.

  Depending upon site-specific factors, there may not necessarily be a significant impact on long-term average

US EPA ARCHIVE DOCUMENT

indoor concentrations if the pressure differential across some portion of the slab is occasionally reversed by operation of these exhaust fans. Moreover, since SSD seems to work by mechanisms in addition to soil depressurization (in particular, by soil gas dilution), it may in fact not be necessary to guarantee that the sub-slab depressurizations being established by the system are greater at every sub-slab location than every potential basement depressurization that the system may ever encounter. However, where the SSD system can reasonably be designed to provide sub-slab depressurizations of about 0.01 to 0.02 in. WG everywhere during cold weather with the appliances off, in order to ensure that the system will essentially never be overwhelmed, it is advisable to do so.

Where slab pressure measurements are made during mild weather, the (conservative) target sub-slab depressurization with exhaust appliances off would be increased to 0.025 to 0.035 in. WG, to include the further basement depressurization caused by the thermal stack effect during cold weather. (This conservative maximum basement depressurization is thought to be high; combustion appliances would back-draft if such basement depressurizations were maintained for an extended period.) The stack effect is discussed further in 2.3.1e (*Climatic conditions*).

Where forced-air supply ducts are located under the slab, then the SSD system faces an even greater challenge. Not only must the system overcome any depressurization of the house caused by leaky cold air returns, but it must also overcome pressurization of the sub-slab region caused by the supply ducts. Testing in a total of eight slab-on-grade houses having sub-slab supply ducts (Fi89, Fi90, Mes90a) has demonstrated that, where good aggregate is present, the SSD system can generally maintain good radon reductions despite operation of a central furnace system having such ducts. There are no data available on the effects of forced-air return ducts under the slab, which would present the SSD system with an entirely different challenge than do supply ducts.

c) Mitigation system design variables

- ***Number of suction pipes.*** Where there has been a good aggregate layer beneath the slab, radon reductions to 2 pCi/L and less have commonly been achieved in both basement and slab-on-grade houses using only one or two suction pipes (Tu89, Bro90, Du90, Fi89, Gi90, Mes90a, Mes90b, We90, Fi91). Residential slab areas as great as 1,850 ft² (Fi89) to 2,700 ft² (Mes90a) have been treated by a single suction pipe under favorable conditions, as have school slabs as large as 50,000 ft² (Cr92b).

  But when communication is marginal or poor, more pipes will be required to maintain adequate sub-slab depressurization at the major entry routes. Mitigators report two to four suction pipes commonly being required in "typical" marginal-communication houses (Bro90, Mes90b), about one pipe per 350 to 750 ft². However, depending upon how poor the communication is, how widely the entry routes are distributed, and how large the house is, even more pipes can be required. Three to five pipes (corresponding to one pipe per 350 to 750 ft²) have proven inadequate to reliably achieve less than 4 pCi/L in some Florida slab-on-grade houses having poor sub-slab communication (Fo92). Some commercial installations have been reported having as many as eight (St90) to eleven (Bro90) suction pipes in worst-case basement houses where communication was truly poor. In one large basement house (2,260 ft² slab) with no measurable suction field extension beneath the slab, 20 suction pipes (about one pipe per 100 ft²) reduced 3-month winter-quarter concentrations in the basement to 2 pCi/L (Sc88), raising doubts regarding the viability of achieving near-ambient radon concentrations with SSD alone in that house, at least in the basement during cold weather.

  Where communication is moderate to poor, various investigators have used pre-mitigation diagnostic tests to aid in deciding how many suction pipes will be needed at what locations in order to adequately depressurize the sub-slab (EPA88b, Fo90, Fi91, Tu91a, and Tu91b, among others). These tests commonly involve use of a vacuum cleaner to determine the ease of suction field extension under the slab. A large number of mitigators report that the vacuum cleaner testing, although useful as a qualitative indicator of good vs. poor communication, generally appears to over-predict the number of SSD pipes actually required to achieve the required radon reductions when used for quantitative design (Fo90, Fi91, Si91, Sau92). That is, the sub-slab suction field generated by the vacuum cleaner is more limited than it should be, suggesting that more SSD pipes will be needed to provide the desired depressurization than are in fact required to adequately reduce indoor radon levels. Perhaps in some cases, the disagreement between the vacuum cleaner and the SSD results occurs because the vacuum cleaner diagnostic test has not been conducted properly—e.g., insufficient time has been allowed for the vacuum cleaner to establish its suction field at remote test holes (Hi92). (See Section 3.3.2.) This result may also be indicating that the SSD system is working by mechanisms in addition to depressurization—e.g., by soil gas dilution, which the vacuum cleaner flows are sometimes too low to reproduce.

- ***Location of suction pipes.*** Where there is a good layer of aggregate, the one or two suction pipes can usually be located just about anywhere, as necessary to avoid finished areas and to accommodate the homeowners' living patterns. If there is no constraint regarding pipe location, placement of the pipes near what would appear to be the more important potential entry routes would intuitively seem to be advisable (e.g., toward the fully below-grade block foundation wall in a walk-out basement); but the pipes should never be placed too close to a major slab opening, such as an unsealed perimeter channel drain, which would permit excessive air short-circuiting into the system. If there are constraints on pipe location, this is generally not a problem when sub-slab communication is good; there are numerous instances where large slabs have been very effectively treated (reducing indoor levels to 1 to 2 pCi/L) with a single pipe at one end. Examples include House 21 in Reference Sc88, House 43 in Reference Fi89, and House 488 in Reference Mes90a.

US EPA ARCHIVE DOCUMENT

Where the sub-slab region can conveniently be accessed from outdoors, as is often the case in slab-on-grade houses, pipes penetrating through the foundation wall from outdoors appear to give reductions comparable to those achieved when the pipes penetrate down through the slab from indoors when communication is good (Fi90). Such exterior penetrations have even been successfully used in basement houses, in cases where the basement is so heavily finished that interior pipes are not practical (Kl89).

When communication is moderate to poor, more care is required in locating the multiple suction pipes near the major entry routes, since the suction field will not extend so far from the pipes. General experience, together with measurements of the "radon entry potential" around slabs (Tu91a, Tu91b), have indicated that the wall/floor joint, and block foundation walls where present, are consistently among the major entry routes. Interior slab locations are usually major routes only where there is some major slab opening at an interior site (e.g., a cold joint, or an interior block foundation wall or fireplace structure which penetrates the slab). Consequently, suction pipes are commonly placed near the perimeter walls when communication is poor (e.g., Sc88, Tu91b), with pipes placed at interior locations primarily when there is an interior entry route. Again, a suction pipe should not be placed too close to a major unsealed slab opening, to avoid excessive short-circuiting of house air into the system.

In addition to having the pipes near the major entry routes, location of the pipes around the perimeter in poor-communication cases also takes advantage of the fact that sub-slab communication will generally be best in the vicinity of the footings. The region around the footings had to be excavated and backfilled during construction; thus, the soil will tend to be looser and more permeable at that location, and some soil subsidence may even have taken place there after the slab was poured, possibly creating an air gap under the slab.

The one case where perimeter placement of suction pipes appears to be undesirable in poor-communication houses has been in slab-on-grade houses with block foundations and shallow footings in Florida (Fo90, Fo92), as discussed above under *Nature of foundation wall.* A similar result has been reported in Arizona and southern California (Kl92). Because of the extremely poor sub-slab communication in the Florida houses, location of the SSD pipes near the perimeter probably is resulting in enough outdoor air short-circuiting into the SSD system through the above-grade block foundation wall and perhaps through the soil under the footings, to unacceptably reduce the already-weak suction field extension through the sub-slab fill material. Location of suction pipes near perimeter block walls in slab-on-grade houses has not been found to be a significant problem at other sites, including Ohio (Fi90) and Maryland (Mes90a), where aggregate is present under the slabs. Nor did it appear to be a major problem in New Mexico slab-on-grade houses, despite the fact that the communication under the New Mexico slabs appears as poor as that under the Florida slabs.

- ***Size of suction pipes.*** The suction loss in the system piping is determined by the gas velocity in the pipe (and hence the pipe diameter), as well as by the length of piping and the number of elbows and other obstructions in the piping. For a given piping configuration, the pipe diameter necessary to adequately reduce suction loss can be calculated based upon the capabilities of the SSD fan being used and upon the suction that must be maintained beneath the slab. Four-inch diameter pipe has been the size most commonly used, since 4-in. PVC piping is readily available, and provides reasonably low suction loss over the range of flows typical of most SSD installations (commonly 25 to 100 cfm in houses having good communication). Three-in. diameter piping can usually be considered where desirable for aesthetic reasons (e.g., to permit concealment within stud walls), where flows are sufficiently low, and/or the piping run is sufficiently short, and/or fan capacity is adequate. When very low flows (e.g., 10 cfm) are expected in a particular suction pipe in poor-communication houses, 2-in. piping can be considered for that particular pipe.

  Another consideration in selecting pipe size is to reduce flow noise in the piping. As flow velocity in the pipe becomes greater than roughly 1,000 to 1,500 ft/min, pipe noise becomes increasingly audible (An92, Br92). These velocities correspond to roughly 90-130 cfm in a 4-in. pipe, or 50-75 cfm in a 3-in. pipe. The noise level tends to be greatest at elbows and other flow obstructions.

- ***Pit size under SSD pipe.*** Excavating a pit beneath the slab, at the point where the SSD pipe penetrates, decreases the pressure drop experienced by the soil gas in accelerating from its low velocity beneath the slab up to the velocity that exists in the system piping. Such pits would thus permit the suction being developed by the fan to more effectively produce a suction field beneath the slab, rather than being consumed in accelerating the soil gas. In addition to reducing the pressure loss due to gas acceleration, pits may also function in some cases by intersecting more permeable fractures and strata in the soil/fill underlying the slab.

  Pits are most important where the sub-slab communication is marginal or poor, where the fan can use all the help it can get in developing an adequate sub-slab suction field. Pits will also be beneficial in good-communication cases. The higher flows when communication is good might result in suction losses due to acceleration even greater than those in the low-flow poor-communication cases, if the pit were not present. However, the good-communication houses would be better able to sustain that suction loss without as great an impact on SSD performance. Thus, pits are typically excavated in good-communication as well as poor-communication houses, although the pits are probably most crucial for the poor-communication cases.

US EPA ARCHIVE DOCUMENT

The benefits of increasing the pit size in poor-communication houses will depend upon the nature of the sub-slab fill material and of the underlying soil (i.e., the presence of fractures and strata in the underlying material). In one study (Ma89a), increasing pit depth from zero to 4 ft increased the effective distance over which the measurable suction field extended, by factors ranging up to 10 in four poor-communication basement houses in Tennessee. These increases resulted from reduced acceleration pressure losses, as predicted by a mathematical model of suction field extension, and also from increases sometimes observed in the effective permeability of the sub-slab soil/fill, presumably achieved through intersection of fractures and strata.

In another study (Fo89, Fo92), in four poor-communication slab-on-grade houses in Florida, tests were made with three different pit configurations (no pit, pit 10 in. square by 12 in. deep, pit 15 in. square by 19 in. deep). The results showed that the pits could increase measurable sub-slab depressurizations by up to 0.005 to 0.02 in. WG at test holes 15 to 20 ft from the SSD suction pipe. However, there was not a clear relationship between pit size and the resulting increase in depressurization.

In a third study (Py90), the effects of a range of pit dimensions were tested in four basement houses in Tennessee having poor communication. In this study, wide, shallow pits (28 in. square by 10 in. deep) provided better sub-slab depressurizations in two houses (by 0.002 to 0.05 in. WG) at distances of 8 to 25 ft from the suction pipe, than did narrow, deep pits (4 in. square by 30 in. deep). In two other houses, pit sizes were increased from zero (no pit) to, first, 10 in. square by 12 in. deep (10 x 12 in.); then to 20 x 16 in.; and then to 24 x 18 inches. Sub-slab depressurizations generally increased with increasing pit size, with some important differences between the two houses. In the first of these latter two houses, which had better communication than did the other, the depressurizations were increased by 0.001 to 0.064 in. WG at distances of 9 to 38 ft from the suction pipe, and increasing the pit size above 20 x 16 in. did not provide significant improvements. But in the second house, no increase in pit size was able to make the measurable suction field extend beyond 8 ft from the suction pipe; within that 8-ft distance, the depressurization continued to increase distinctly with increasing pit size, even above 20 x 16 inches.

From the above results, it is apparent that pits can definitely be helpful in extending the suction field in houses having poor sub-slab communication, consistent with theory. The most cost-effective size for a pit will be site-specific. Depending upon how low the sub-slab permeability is, and depending upon whether fractures are present in the sub-slab material, pits will not always serve to extend the measurable suction field to distances significantly greater than can be achieved without pits. However, pits will usually increase the measurable depressurization that is achieved within this distance.

All three of the studies discussed above focused on the effect of pit size on measured sub-slab depressurizations, not the effect of the pits on the actual radon reduction performances of the SSD systems. Given the previous observations that measurable depressurizations everywhere under the slab are not always required for effective radon reductions, the effect of the pits on radon reductions might have been better than their effect on the depressurizations in some of the cases where depressurizations were not significantly increased by the pits.

In practice, most mitigators excavate a sub-slab pit of 6 to 18 in. radius, the size that can be conveniently prepared by reaching through the hole that has been drilled through the slab for the suction pipe. From the standpoint of reducing suction losses due to soil gas acceleration, calculations indicate that there would be no significant benefit in making the pit any larger than 12 to 18 in. (Br92). The only potential benefit of a larger pit would be increased possibility of intersecting permeable fissures or strata.

- ***Degree of slab sealing.*** Sealing of the wall/floor joint and of other slab openings would generally be expected to improve SSD performance, by improving the distribution of the suction field beneath the slab. Slab sealing would also be expected to reduce the amount of house air withdrawn by the system, thus reducing the house heating and cooling penalty. A variety of generally anecdotal measurements have been made by individual investigators regarding the effect of slab sealing on system performance, usually in cases where some major opening (such as an initially unclosed perimeter channel drain) appeared to be degrading the performance of an existing SSD system. The effects of such sealing would be expected to be site-specific, depending upon such factors as the size of the slab opening, the sub-slab communication, and the proximity of the suction pipe to the opening.

d) Mitigation system operating variables

- ***Fan capacity.*** The centrifugal in-line tubular fans currently being installed in many residential mitigation systems typically range in size from approximately 50 watts with 4-in. diameter couplings (capable of moving about 125 cfm at zero static pressure) to approximately 90 watts with 6-in. couplings (capable of moving about 270 cfm at zero static pressure). Fans as small as 29 watts have been used by some mitigators (Str91). In general, the 90-watt fans will provide more effective treatment of entry routes in a given house, lower indoor concentrations, and better insurance against the system being temporarily overwhelmed by weather effects or homeowner activities, compared to the 50-watt fans. However, these larger fans create a higher system operating cost, due to increased power consumption and an increased heating/cooling penalty resulting from withdrawal of a greater amount of treated air out of the house.

Where a 90-watt in-line fan at full power is not necessary to achieve the desired reductions, an operating cost savings of roughly $70 per year (He91b, He91c) might be

US EPA ARCHIVE DOCUMENT

achieved by using a 50-watt fan, or by operating a 90-watt fan at reduced power. But this reduction in operating cost will essentially always be accompanied by an increase in the residual radon levels in the house, even if levels remain below 4 pCi/L. Therefore, it is recommended that a safety factor be used in selecting the fan size and operating conditions, rather than risking increases in homeowner exposure by under-sizing the fan in an effort to achieve relatively modest reductions in operating cost.

The annual cost savings of $70 from switching to the smaller fan translates into only $5 to $6 per month savings in electricity and heating/cooling costs, a differential which many homeowners may not be able to distinguish within the normal monthly variations in their utility bills. The reductions in the capital cost of the fan would also be only modest, with the 90-watt fans currently being no more than $10 more expensive than the 50-watt fans (He91b, He91c). On a national scale, however, consistent use of the larger fan will result in increased pollutant release from electrical power plants and increased consumption of natural resources (coal, oil and gas). The trade off between reduced indoor radon levels with the larger fan, on the one hand, vs. increased energy costs, increased power generation requirements, and increased resource consumption on the other hand, is a decision that each individual mitigator and homeowner will have to make for their individual situations.

Testing in both basement and slab-on-grade houses has shown that the 90-watt centrifugal in-line fans can sometimes be operated at reduced power and still achieve indoor levels of 4 pCi/L and less, if communication is good, if the source strength is not too high, and if the house is not too large. However, even where there is good aggregate, a reduction in fan power results in some increase in radon levels, even though levels remain below 4 pCi/L. In one basement house in New Jersey (House 3) having good communication and a 2-pipe SSD system (Du90), a 90-watt fan reduced basement concentrations from 180 pCi/L to 0.8-1.0 pCi/L in two separate 6-day measurements with the fan at full power; levels increased to 1.8 to 2.3 pCi/L in two 6-day measurements with the fan reduced to 75% of full power, and to 3.7 to 4.6 pCi/L in two several-day measurements with the fan reduced to 50%. In another good-communication basement house having an adjoining paved crawl space (House 7 in Du90), with a SSD + BWD variation involving suction on a baseboard duct over a perimeter channel drain, post-mitigation levels in the basement increased from 0.3 pCi/L to 2.7 pCi/L when the 90-watt fan was reduced from full power to 50% of full power. (Pre-mitigation levels were 34 pCi/L.)

In another study (Ma88) in three basement and basement-plus-crawl-space houses having good communication and two-pipe SSD systems (OR-15, -17, and -18), reduction of a 90-watt fan to 25 to 50% of full flow resulted in only limited increases, if any, in indoor radon levels. In one basement-plus-slab-on-grade house in Washington state having good communication and a one-pipe SSD system (House ESP113 in Pr87), living-area radon levels increased from 4.3 to 5.0 pCi/L when fan power was reduced sufficiently to decrease the suction in the system piping from 1.7 to 0.8 in. WG, and the flows from 36 to 23 cfm.

The effect of reduced fan capacity was also tested in nine slab-on-grade houses in Ohio having good sub-slab aggregate (Fi90, He91a). In most houses having two SSD pipes, the effect of fan capacity was tested with both pipes operating, and also with each pipe operating individually. Where the system was reliably treating the house with the fan at full power, decreasing the 90-watt fan from full power to one-eighth of full power increased indoor radon levels from an average of 1.1 pCi/L to an average of 2.2 pCi/L (averaged over all houses). In three of these cases, decreasing fan power did not increase indoor levels. Only in cases where the SSD system was marginal with the fan at full power, were indoor levels increased above 4 pCi/L when fan power was reduced.

Occasionally, the 90-watt centrifugal in-line tubular fans will not be adequate for a given SSD installation. Under these circumstances, the question shifts from one of how small the fan can be, to one of whether an even larger fan (or multiple fans) might be warranted.

If the problem in a given installation is that system flows are too high (so that the 90-watt fan cannot move enough air to develop adequate sub-slab depressurization), then a higher-volume fan is needed. Higher-volume centrifugal in-line fans that have most commonly been used include 100-watt units with either 6- or 8-in. couplings, capable of moving up to 410 cfm at zero static pressure. (Increased volume can also be achieved by operating two smaller fans in parallel; however, for a given total volumetric flow rate, a single larger fan will generally have lower capital and operating costs than two smaller ones having a combined volumetric flow capacity equal to that of the one larger fan.) From a practical standpoint, SSD systems in residential applications will not commonly have this problem of the flows being too high. If flows are so high that a 410-cfm fan appears to be needed, it is likely that air is short-circuiting into the system somewhere, and the need is for some additional sealing rather than for a larger fan.

More commonly, the problem with SSD systems where the 90-watt fan is inadequate will be that the 90-watt fan is drawing very little flow. This will be the case when sub-slab communication is poor. In poor-communication cases, the typical 50- and 90-watt centrifugal tubular fans operate at maximum suction and at low flows, at the extreme end of their normal performance curve. Under these conditions, some investigators have considered using high-suction, low-flow fans and blowers better designed to operate at those conditions (EPA88b, Fo90, Cra91). High-suction fans and blowers can generate from perhaps 4 to more than 40 in. WG suction, compared to 1 to 2 in. WG maximum for the centrifugal in-line fans. These high-suction units have the disadvantages of significantly greater capital and operating costs; in addition,

US EPA ARCHIVE DOCUMENT

US EPA ARCHIVE DOCUMENT

units not manufactured specifically for radon mitigation are commonly much more noisy. Several high-suctions blower currently being marketed for radon reduction are quiet, but have a higher capital cost (more than $600, compared to less than $100 for a 90-watt in-line fan) and a higher power consumption (generally greater than 150 watts) (Cra91, Ra92). Another disadvantage of some of these blowers is that since their performance curve is designed for low-flow operation, a relatively small increase in flows (due, for example, to leaks that develop in the system over time) could cause the fan to become overwhelmed, losing its effectiveness.

High-suction regenerative blowers were tested in two basement houses in New York, each having poor communication and pre-mitigation concentration basement concentrations of 21 pCi/L (Houses OP-01 and OP-09 in Ni89). In each house, the blower drew on four SSD pipes around each basement perimeter. In House OP-09, this high-suction system reduced basement concentrations to 3.4 pCi/L. But in OP-01, the regenerative blower reduced basement levels to only 11 pCi/L. By comparison, a typical tubular fan drawing on a single, central SSD pipe in House OP-01 provided only slightly poorer reductions, to 14 pCi/L. It was subsequently found that the block foundation wall was the primary entry route requiring direct treatment in this particular house, and OP-01 was ultimately reduced below 4 pCi/L with a combined SSD+BWD system. The regenerative blower was clearly not much more able than the in-line fan to extend suction to the points (perhaps outside the foundation) where soil gas was entering the wall void network, despite the location of suction pipes immediately beside the wall.

In testing on one of the poor-communication slab-on-grade houses in Florida (Fo89), measurements were made comparing the sub-slab depressurizations created by the standard 90-watt centrifugal tubular fan (<2 in. WG), and by two different blowers capable of developing 2.3 and 6 in. WG static pressure. The results showed that the high-suction blowers increased the sub-slab depressurization at test holes (within about 15 ft of the suction hole) where the in-line fan had generated measurable depressurization to begin with. Sub-slab depressurization at these holes was increased by an amount proportional to the increased suction in the SSD pipe. However, the blowers did not extend the measurable suction field to greater distances than the in-line fan had provided. These tests did not include measurements of the effects of the different fans/blowers on the radon levels in the house.

One firm reports having tested a high-suction blower (typically operating in the range of 4 to 14 in. WG) in 42 basement houses in New England having very poor communi-cation, with packed sand and/or clay beneath the slab, and with system flows of about 20 cfm (Cra91). Indoor levels were reportedly reduced below 2 pCi/L in all of these houses, usually with only two suction pipes, based upon short-term post-mitigation measurements. Three-quarters of the houses were reportedly reduced below 1 pCi/L. Pre-mitigation indoor concentrations averaged about 20 pCi/L. The two suction pipes corresponded to about one pipe per 500 ft^2 of slab area, on the average.

In summary, available data on the use of high-suction fans/blowers are limited. In very poor-communication houses with low flows, such blowers would be operating more comfortably on their performance curve than would the standard in-line fans, and they thus might have a longer lifetime. However, at the present time, the limited results are mixed regarding whether radon reduction performance would be significantly improved by such blowers. It has not been demonstrated that such high-suction fans/blowers will in fact consistently result in an extension of a sub-slab suction field to portions of the slab that would not be reached by a standard 90-watt in-line centrifugal fan, although some additional extension would intuitively be expected. Accordingly, definitive guidance cannot currently be given regarding under what conditions such blowers would be worth the increased cost (and sometimes increased noise) that they would entail.

- ***Fan in suction vs. pressure.*** The case where the SSD fan is reversed, so that it pressurizes the sub-slab region with outdoor air rather than depressurizing it, will be addressed in Section 2.4.

e) Geology/climate variables

- ***Source strength.*** "Source strength" refers to the amount of radon which the underlying soil can supply to a house, and depends upon both the radon concentration in the soil gas and the rate at which the soil gas can move through the soil. Most commonly, a high source strength results from a high radon concentration in the soil gas; in this document, soil gas concentrations greater than 2,000 pCi/L will be referred to as "high."

  High source strengths necessitate more care in the design of SSD systems, even where sub-slab communication is good, because:

  a) any soil gas entry route left untreated by the system will be potentially significant, in view of the concentration of radon that can enter the house through that opening; and

  b) re-entrainment of the SSD system exhaust back into the house can be more significant, in view of the radon concentrations that will exist in the exhaust (with re-entrainment of only 0.1% of the exhaust being sufficient in worst-case houses to create indoor levels of 4 pCi/L and greater) (Fi91).

  Basement and slab-on-grade houses having high source strengths have commonly demonstrated the greatest difficulty in achieving post-mitigation indoor levels significantly below 4 pCi/L (Sc88, Fo89, Fi91, Fo92). Such houses may have difficulty achieving near-ambient indoor levels.

- ***Permeability of underlying soil.*** In most cases, the performance of a SSD system is determined by the com-

munication within (the permeability of) the material immediately below the slab, rather than that of the native soil. The material below the slab will commonly be gravel or crushed rock, or perhaps native soil that has been disturbed during construction of the house; such materials will generally have better permeability than the undisturbed native soil. If the native soil is relatively impermeable but the material directly under the slab is fairly permeable, good SSD performance is commonly achieved (e.g., Fi90).

However, the permeability of the native soil can be important in some cases. Soils having moderate permeability might aid the SSD system in treating entry routes associated with block foundation walls, either through extension of the sub-slab suction field under footings to the exterior face of the wall, or through dilution of the soil gas with ambient air drawn through down the soil. This statement is based on the observation that a BWD component has more commonly seemed to be needed, in addition to or instead of SSD, when the sub-slab communication has been very poor (Ni89, Py90, Fi91).

Where the permeability of the native soil is relatively high, SSD performance can suffer, apparently because outdoor air flowing down through the soil and into the system can interfere with the extension of the suction field. This problem was encountered in basement houses built on glacially deposited, excessively drained sandy and gravelly soils in the Spokane River Valley (Tu87). In 5 of these houses where both pressurization and depressurization of the sub-slab were tested, reversing the fan to pressurize the sub-slab (an approach which depends upon the ability to maintain high flows through the system) was consistently found to provide better radon reductions than did SSD (which is better able to maintain adequate suction fields in cases where flows are moderate to low). Similar results were observed in 1 house built on a very well-drained gravel soil in New York (Kn90).

Another way of stating the above observation is that at least two mechanisms are contributing to SSD performance, as discussed earlier: soil depressurization and soil gas dilution. With relatively tight native soils, soil depressurization is likely the more important of the two mechanisms, and SSD is the technique of choice. But with highly permeable native soils, high air flows are established through the soil; soil gas dilution becomes the predominant mechanism, and maintenance of a sub-slab suction field becomes more difficult, with the result that active soil pressurization may become the technique of choice.

- ***Climatic conditions.*** Weather conditions can influence the performance of SSD systems in several ways.

  a) Cold temperatures will increase the depressurization created by the thermal stack effect on the lower level of the house, depending upon the height of the house and the temperature difference between indoors and outdoors. This depressurization will increase the driving force for radon entry, and will give the SSD system a greater indoor depressurization to overcome. Basement depressurization in a two-story house created by the stack effect during cold weather would be approximately 0.015 in. WG (Sau89).

  If sub-slab depressurizations being created by a SSD system were being measured during mild weather with exhaust appliances off, the conservative rule of thumb would thus be that the system should be designed to maintain a depressurization of at least 0.015 in. WG everywhere to avoid being overwhelmed by the stack effect when cold weather arrives. In addition, to avoid being overwhelmed by the incremental basement depressurization created when exhaust appliances are turned on during cold weather, the SSD system should nominally maintain an additional sub-slab depressurization of up to 0.01 to 0.02 in. WG, as discussed previously in Section 2.3.1b. Thus, ideally, sub-slab depressurizations measured during mild weather with appliances off should total about 0.025 to 0.035 in. WG everywhere in order to ensure that the system will never be overwhelmed during cold weather with the appliances on.

  But as re-iterated several places in this document, this target depressurization is usually a very conservative design goal. Commonly, sub-slab depressurizations much less than these ideal targets will still provide satisfactory SSD performance. Thus, an expensive upgrade of a SSD system in an attempt to achieve these high depressurizations is often unnecessary. However, where the SSD system can reasonably be designed to achieve such depressurizations, it is probably advisable to do so.

  Furthermore, this conservative maximum basement depressurization of 0.025 to 0.035 in. WG due to thermal and appliance effects is thought to be high for many cases. Houses which are in milder climates, which are leaky, or which do not have some of the major depressurizing appliances (e.g., clothes driers, whole house fans, central furnace fans) will encounter lower worst-case basement depressurizations. In addition, the upper end of the range assumes that the major depressurizing appliances are operating during the coldest weather; among these appliances, whole-house and attic fans will in fact not be operated in cold weather, and clothes driers will be operated only intermittently. Combustion appliances in the basement would backdraft if depressurizations as great as 0.035 in. WG were actually maintained for any extended period. But although this basement depressurization range may be conservatively high for many houses, it is used throughout this document as a reasonable, conservative design tool which can be useful as long as it is properly understood.

  Where an aggregate layer exists beneath the slab, SSD systems can commonly achieve sufficient sub-slab depressurizations to compensate for the worst-case stack effect and exhaust appliance effects with one or two suction pipes (e.g., Gi90, Mes90a, Fi91). Where

US EPA ARCHIVE DOCUMENT

sub-slab communication is not good, more suction pipes, and more careful placement of the pipes, would be necessary to achieve 0.025 to 0.035 in. WG.

Where slab pressure measurements are made during cold weather with exhaust appliances on—i.e., with the system experiencing its worst-case challenge—any measurable sub-slab depressurization should be sufficient (0.001 to 0.002 in. WG).

b) Winds blowing against a house will create negative pressures across the house shell on the downwind side at the roof, and will create positive pressures on the upwind side. The net effect of these pressure changes on SSD system performance will vary from house to house, depending upon where the major openings through the house shell are, and where the major soil gas entry routes are. Data on wind speeds and directions around mitigated houses have been collected in only a few studies (Tu87, Ma88, Tu88a, Du90, Tu91b). The data from these studies has not been fully analyzed. From the analysis to date, no generally applicable, unambiguous effect of wind velocity has been demonstrated.

c) Decreases in barometric pressure sometimes appear to create significant short-term spikes in indoor radon levels and brief degradations of SSD performance. In two slab-on-grade houses in New Mexico (Tu91b), decreases in barometric pressure were found to consistently cause spikes to 10 to 20 pCi/L, where the SSD system was otherwise maintaining levels below 2 to 4 pCi/L. This barometric pressure effect appeared to be independent of other weather-related variables often associated with barometric pressure changes, namely, winds and precipitation. Similarly, others have reported that indoor radon concentrations commonly spike when barometric pressure falls (Kl92). The probable mechanism responsible for this barometric effect is that the indoor pressure decreases rapidly in conjunction with the drop in barometric pressure, while the soil gas pressure decreases more slowly. This lag in equilibration of the soil gas pressure results in a temporary increase in the house depressurization relative to the soil, increasing the driving force dramatically (by an amount potentially on the order of inches of water) and overwhelming the SSD system.

d) Precipitation, in the form of rain or snow, might influence SSD performance via two different mechanisms.

In the first mechanism, the resulting cap of snow or water-saturated soil at grade level can divert soil gas toward the foundation which would otherwise escape to the outdoor air remote from the house. As one example of how this might create a problem, this diverted soil gas might result in increased entry via the exterior face of a block foundation wall which is not being treated by the SSD system. In this hypothetical case, failure of the system to treat the exterior face might not be a problem when the soil gas is not thus diverted by the cap. Another possible way of viewing this could be that the moisture cap on the surface could be blocking the flow of ambient air down through the soil into the SSD system, thus reducing the benefits of the soil gas dilution and air-barrier shielding mechanisms postulated at the beginning of Section 2.1

In the second mechanism by which precipitation might affect SSD performance, moisture in the fill under the slab could reduce the communication within the fill, possibly reducing performance (unless the moisture also blocks radon entry). Such changes in sub-slab communication with precipitation have been reported in Florida (Fo90), although the actual effects on SSD performance have not been closely studied.

Of the investigators who have measured precipitation as part of mitigation projects (Tu87, Ma88, Tu89, Du90, Tu91b), those reporting results to date generally indicate no discernible effect of precipitation on SSD performance (Tu89, Du90). However, more definitive data are needed.

f) Mitigation system durability

- A number of investigators have made measurements around SSD systems, installed either as parts of a R,D&D project or as a commercial installation, in order to assess how well the systems were performing 1 to 4 years following installation (Ni89, Pr89, Du91, Fi90, Fi91, Gad91, Ha91). These studies have addressed both the radon concentrations being maintained in the houses, and the reasons for any observed degradation in performance (decreases in system suctions and flows, hardware failure, or homeowner intervention).

- ***Radon reduction performance.*** In general, except where a SSD fan failed or where the system was turned off by the homeowner, systems that were installed as part of a R,D&D project have maintained fairly consistent indoor radon concentrations over the 1- to 4-year periods covered by the various studies.

  One of the largest and longest-term durability studies (Fi91) has addressed 38 basement houses in eastern Pennsylvania having very high pre-mitigation concentrations, where systems were installed under an EPA project during the period 1985-87 (Sc88). Twenty of these houses had SSD systems (one with a BWD component). Winter-quarter alpha-track detector measurements in the basements and living areas were compared for the winters of 1986-87, 1987-88, and 1988-89 (Sc89, Sc90b). In 7 of the 20 SSD houses, the 1988-89 winter-quarter reading was greater than the average over all three winters by 1.0 pCi/L or more, suggesting a possible degradation in system performance over the two to four years since installation. The value of 1.0 pCi/L represents the estimated 95% confidence interval in the measurements, considering both the alpha-track measurement uncertainty and the natural radon variations in the house. Testing indicated

US EPA ARCHIVE DOCUMENT

US EPA ARCHIVE DOCUMENT

that, in four of the seven houses varying by more than 1.0 pCi/L, the increase was likely due to variations in re-entrainment of the SSD exhaust (containing up to 8,000 pCi/L), or in radon released from well water. In a fifth house, the increase was demonstrated to be due to a dramatic increase in radon entry through an opening through the poured concrete foundation wall, well above the slab; basement concentrations were reduced to 2 pCi/L by closing that wall opening. In only two of the seven houses could the increase not be explained by one of the factors above. In these two, 1988-89 readings varied from the three-winter average by 1.0 and 1.3 pCi/L, respectively. In view of the conservative nature of the ± 1.0 pCi/L confidence interval, and in view of the small absolute variation in concentrations over the three winters, it is not clear that the observed increases in fact represent any real system degradation. Measurements of system piping flows/suctions, and of sub-slab depressurizations, confirm that in none of these cases were the radon increases due to reduced fan performance, or to failure to adequately depressurize the sub-slab.

In summary, it was concluded from the Pennsylvania testing that, overall, none of the SSD systems have experienced any significant degradation over the years in their ability to treat the radon entry routes, except in cases where the fan failed (discussed later) or where the homeowner turned the system off.

In another study (Ha91, Gad91), three- to six-month alpha-track detector measurements were made in ten basement houses in New Jersey over a 2-year period, after SSD systems had been installed as part of an earlier R,D&D project (Tu89, Du90). In none of the houses did there appear to be any significant deterioration in radon levels in the house, except in two cases where the homeowner turned off the fan. (Two of the houses did show seasonal variations in radon levels.)

In a third study (Du91), continuous radon measurements were conducted for a year or more in four basement houses in the Tennessee Valley having SSD systems (two having SMD components) installed under a R,D&D project (Ma88, Ma89a, Ma89b). While radon measurements did increase slightly in all four houses over the year, in no case was the increase greater than 0.9 pCi/L (with the average increase being 0.5 pCi/L), and in no case did the indoor levels exceed 2.7 pCi/L. No clear degradation of system performance is apparent.

In 10 houses in Ohio having SSD systems (Fi90), quarterly alpha-track measurements conducted over a 1-year period generally remained in the range of 1 to 2 pCi/L and less, with no quarter-to-quarter deterioration apparent over the year. No seasonal variation was apparent.

In an earlier study (Ni89), 14 New York houses which had received radon mitigation systems as part of a 1984 project (Ni85) were re-visited in 1986-87 to assess the long-term effectiveness of these early installations. Of the six basement houses having SSD systems, radon levels appeared to have increased by 4 to 20 pCi/L in two of the six, and marginally (by 1 to 3 pCi/L) in three others. The increases resulted from condensate plugging the exhaust piping in one house, partial blockage of the grade-level exhaust pipe in two others, and radon leakage out of the pressure side of the fan (which was inside the basement) in one or two others. These problems reflect the fact that these SSD installations were some of the first in the U.S., and were among those contributing to the understanding that now exists regarding sloping exhaust piping to avoid condensate accumulation, and avoiding fans inside the house.

While some preliminary measurements have been made to assess the durability of SSD systems installed by private mitigators (Ha91, Gad91), definitive results are not yet available.

- ***System suctions and flows.*** System suctions and flows have remained relatively steady over time in those durability test projects where those data have been reported (Pr89, Fi91). In the SSD installations in Pennsylvania (Fi91), system conditions remained remarkably steady over the two to four years that the systems had been operating, except when the fan failed. It was found that, when the capacitor in the fan circuitry fails, the fan can continue to operate for an extended period at dramatically reduced suction and flow, as discussed later.

- ***Sub-slab depressurizations.*** In four basement houses in the Tennessee Valley (Du91), sub-slab depressurizations showed no discernible change over the course of a year, when the mitigation systems were operating normally. In 20 Pennsylvania houses having SSD systems (Fi91), sub-slab depressurizations remained generally high after 2 to 4 years of operation.

- ***Equipment durability.*** Of the 20 fans operating since 1985-87 on SSD systems in the Pennsylvania project, four have failed to date, all due to failure of the capacitor in the fan circuitry (Fi91). All 20 of these fans are 90-watt centrifugal in-line tubular fans from one vendor. Of the 14 SSD installations in New Jersey (Tu89, Du90), three 90-watt tubular fans have failed since 1986-87, two due to capacitor failure and one due to bearing failure (Ha91, Gad91). One private mitigator who has installed approximately 100 fans of the same type that is in the Pennsylvania study houses, estimates that roughly 10 failures have occurred over the past 5 years, about one-third due to capacitors and two-thirds due to bearings (Mes90b). The vendor of these particular fans has indicated that, at least in the earlier models, the capacitors installed in the fans had a rated operating lifetime of 40,000 hours (about 4.5 years of continuous operation), in which case additional failures can be expected in the near future as these installations age. Depending upon the brand of fan, capacitors can often be replaced relatively easily.

  When the capacitor fails, the fan will commonly stop operating after a relatively short time because the coils in the motor will burn out. However, in one case (Fi91), the fan continued to operate at dramatically reduced power for a year or more after the capacitor failed. Due to the

drop in fan performance, radon levels in the house increased significantly (from 1.9 to 8.8 pCi/L in the basement, compared to pre-mitigation values of 148 pCi/L). Yet, because the fan was running, it would have sounded to the homeowner as if it were operating normally. This result underscores the need for an flow- or suction-actuated alarm or indicator on SSD systems.

If power to the fan is interrupted after the capacitor fails, the fan will not re-start when power is restored.

- ***Homeowner intervention.*** Homeowners have occasionally turned SSD systems off, commonly due to fan noise, or in an effort to reduce the cost of electricity when windows are open during mild weather (Fi91, Ha91). Fans have been turned off when the owners were away. In two instances, the fans were turned off because the speed controller on the fan created radio interference (Fi90, Ha91). Fans were recorded as having been turned off in eight of the 38 study houses in Pennsylvania (Fi91), and in two of the eight houses tested during the durability testing in New Jersey (Ha91).

  With the centrifugal tubular fans commonly used in SSD systems, fan noise can be largely eliminated if the fan is mounted properly with flexible couplings, to avoid vibration in the exhaust piping and the house structural members.

  Turning the fan off when windows are open during mild weather should be discouraged, since it is generally impractical to ensure that the fan is consistently turned back on when windows are closed. Annual alpha-track measurements in the Pennsylvania study houses (Sc90b), where pre-mitigation levels were very high, showed that the open windows did not generally compensate for the system being off. The result was that annual average levels in houses with the fans off during the summer, were usually greater than the winter-quarter values in these same houses, since the systems were usually left on all winter.

  There is usually no problem with fans being turned off while the house is unoccupied, as long as the fans are consistently turned back on when the owners return.

  In those instances where radio interference occurs due to the speed controller, options include a) re-locating the controller in a manner to shorten and re-locate the wire between the controller and the fan, thus modifying the source of the interference; b) using a more expensive controller; or c) eliminating the controller, operating the fan at full power.

2.3.2 Active Sump/Drain-Tile Depressurization

Active sump/DTD is probably the second most used variation of the ASD technology, after SSD. Sump/DTD is likely the most common system installed in houses having a sump connected to drain tiles. (As discussed in Sections 2.1.2 and 2.2.2, SSD can sometimes be selected rather than sump/DTD even when a sump with tiles is present.) While the exact count is uncertain, sump/DTD systems have likely been installed in thousands of houses.

As with SSD systems, sump/DTD systems have commonly provided radon reductions of 80 to 99%. Exceptions have generally occurred primarily in cases where poor sub-slab communication is combined with other problems, such as an incomplete drain tile loop and a high source strength. The highest percentage reductions are obtained when the pre-mitigation level is highly elevated. In some cases where the basement house had an adjoining slab-on-grade or crawl-space wing, the sump/DTD system had to be combined with a SSD or SMD component treating the adjoining wing.

The EPA research program has tested sump/DTD in a total of 16 basement houses, sometimes in conjunction with SSD or SMD treating an adjoining slab-on-grade or crawl-space wing (He87, Mi87, Sc88, Fi89, Ni89, Du90, Gi90, Mes90a). These houses had pre-mitigation concentrations ranging from about 10 pCi/L to greater than 2,000 pCi/L. In all 16 houses, an interior loop of tiles (inside the footings) drained into the sump, although some houses (Mi87) reportedly had exterior loops also; none of the sumps had only exterior tiles. All but 1 of these 16 houses were reduced below 4 pCi/L; 11 were reduced below 2 pCi/L, and 7 (more than 40%) were reduced below 1 pCi/L.

All seven of the houses reduced below 1 pCi/L were in the Washington, D. C., area (Gi90, Mes90a), where achieving such low concentrations has generally proven to be easier than in many other parts of the country. The readings below 1 pCi/L have been confirmed by annual alpha-track measurements in five of the seven houses. The sub-slab communication was good in all seven houses, and pre-mitigation concentrations were generally below 10-20 pCi/L.

The one house which was not reduced below 4 pCi/L was House C32D in Mi87, which remained elevated (with post-mitigation readings of 5-13 pCi/L) even though the sump/DTD system was creating a very effective depressurization (over 0.1 in. WG) everywhere beneath the basement slab (Br92). This house probably remained elevated for two reasons.

- The house had an extremely high source strength, with one pre-mitigation measurement as high as 1,357 pCi/L. As discussed previously,

  -- a high source strength increases the significance of any entry route left untreated by the system. Although the slab was effectively depressurized, it is believed that the sump/DTD system was not adequately preventing the flow of very high-radon soil gas via the block wall cavities.

  -- a high source strength means that any re-entrainment of system exhaust will present an increased problem, since radon levels in the exhaust will also likely be very high. Re-entrainment had been an early problem in this house, and some reduced re-entrainment may have been continuing even after

US EPA ARCHIVE DOCUMENT

initial modifications had been made to the system to take care of this problem.

- The house had an adjoining crawl-space wing which was not treated.

All four of the houses which were reduced below 4 but not below 2 pCi/L were among the earlier houses tested in the EPA program, and most of them offered various complications. Two of them (Houses C30A and C39A in Mi87) had extremely high source strengths, and had adjoining slabs on grade which might not have been being adequately depressurized by the SSD component treating the slab-on-grade wing. Another house (House AR-20 in Ni89) had an unclosed perimeter channel drain at the time that the post-mitigation reading of 2.3 pCi/L was obtained, and showed a notable degradation in system performance a year later when the measurement was repeated with the perimeter channel drain closed, casting some doubt on the final results.

In summary, sump/DTD with interior drain tile loops appears consistently able to reduce even high-level basement houses to 4 pCi/L and less, except in instances where there is a combination of difficulties such as high source strength and untreated adjoining wings. Incomplete drain tile loops combined with poor sub-slab communication might also be expected to present a problem. Where communication is reasonably good, sump/DTD with interior tiles will likely achieve 2 pCi/L and less in the large majority of cases.

The EPA data base does not include testing in houses where an exterior loop (outside the footings) drains into the sump. However, as discussed later, mitigators in some regions of the country have reported extensive experience with such systems (Kl92).

The post-mitigation measurements reported for these 16 houses represent a range of measurement methods and durations. Some of these measurements are from annual alpha-track measurements, while others are from 4-day to 2-week continuous radon monitor readings. However, it is clear that, overall, the sump/DTD systems are being very effective.

The positive experience under the EPA R,D&D program with sump/DTD systems having interior tiles, is generally reflected in the experience of other investigators and of commercial mitigators.

Radon reductions of 70 to 95% were reported with four early sump/DTD installations in basement houses in New York (Ni85). Three of these houses were reduced below 4 pCi/L in the basement, one of them below 2 pCi/L. These reductions were achieved despite a variety of complications, including a) two of the basements had adjoining crawl spaces (which were either actively or passively ventilated as part of the mitigation effort); b) one of the houses (with a crawl space) had only a partial *exterior* drain tile loop, which would generally be expected to give poorer performance than interior loops; and c) the 24-watt fans used were much smaller than the 90-watt units commonly used today. All four houses had pebble aggregate under the slab (Br92). In addition to the one house having an partial exterior loop, two of the other houses had a complete interior loop (Br92). The nature and extent of the tiles in the other house were not reported.

Active sump/DTD systems were installed in a number of block basement houses as part of remedial work in several mining communities in Canada (Ar82). Radon reductions of 60 to 80% were reported for these early installations. Some of the key details regarding these installations were not reported, such as the nature and extent of the drain tile loops, and the nature of the sub-slab communication. In addition, other steps (such as source removal) were commonly implemented in conjunction with the DTD, so that the effects of the DTD system alone cannot always be separated out.

Numerous commercial mitigators have reported installing large numbers of sump/DTD systems in cases where the drain tiles form interior loops, inside the footings (e.g., Mes91, Bro92). The performance of these systems is reported to be generally high, although comprehensive performance data for all of these installations are not available.

Mitigators working in some regions of the country, such as the eastern slopes of the Rocky Mountains, have reported extensive experience with sump/DTD systems in cases where the tiles which drain into the sump are outside the footings (Kl92). These systems have been reported to give consistently good performance when the exterior tiles form a complete loop around full basements. The underlying soil in these houses is commonly decomposed granite, a gravel/clay mix with a permeability that is variable, but sometimes relatively high. There is often no imported crushed rock placed under these basement slabs, with the native decomposed granite having been used in lieu of crushed rock. The good performance of these exterior-loop systems, despite the absence of crushed rock, may be due in some cases to the relatively good permeability which sometimes exists in the native soil.

The following discussion summarizes the results to date with sump/DTD systems, addressing each of the house, mitigation system, and geology/climate variables that can influence system design, operation, and performance. In many cases, the effects of the variables on sump/DTD systems are similar to the effects discussed for SSD systems in Section 2.3.1; in those cases, the discussion here is abbreviated.

a) House design variables

- ***Sub-slab communication.*** Among the EPA study houses where communication was known to be good (13 of the 16 houses), sump/DTD reduced levels below 4 pCi/L in all but one case. That one case was House C32D in Mi87, where a very high source strength and an adjoining wing were complications. In 10 of these 13 good-communication houses, levels fell below 2 pCi/L. Even in the one EPA study house where the communication was reported to be marginal (House AR-16 in Ni89), levels were reduced to below 2 pCi/L. In the two EPA study houses where the communication was not reported (Mi87), levels were reduced below 4 pCi/L, despite high source strengths. In the four sump/DTD installations reported in Ni85, all of which involved good communication, levels were reduced below 4 pCi/L by three of them,

US EPA ARCHIVE DOCUMENT

despite the use of low-power (24-watt) fans and, in some cases, incomplete loops and untreated adjoining wings. In all of these houses (except for one or two in Reference Ni85), the drain tiles were inside the footings.

Where sub-slab communication is good and where the tiles are inside the footings, mitigators report routinely achieving concentrations well below 4 pCi/L with sump/DTD (Mes91, Bro92).

Thus, when the tiles are inside the footings, sump/DTD consistently gives good performance when communication is good (Sc88, Fi89, Ni89, Du90, Gi90, Mes90a, Mes91, Bro92). Even where communication is marginal, sump/DTD might be expected to give reasonable performance with interior tiles (Ni89). The drain tiles would be distributing the suction near the major entry routes (the perimeter wall/floor joint and the base of the block foundation walls). Sump/DTD systems with interior tiles are most likely to be inadequate as stand-alone methods when there is a combination of complications, including poor sub-slab communication, an incomplete tile loop, a high source strength, and/or an untreated adjoining wing which is an important radon source. But even in those cases, sump/DTD could still be an important component of any system that is installed.

As indicated earlier, good radon reductions have been reported in basements having no sub-slab crushed rock and with exterior drain tiles, when the tiles form a nearly complete loop around the house (Kl92). At least in some cases, relatively good permeability in the underlying decomposed granite may be contributing to this effectiveness.

- ***Extent of drain tile loop.*** Since most of EPA's study houses and many of the commercially-mitigated houses appear to have nearly complete interior drain tile loops, there are not sufficient data to quantify the effects of this variable. Where there is good communication and where the drain tiles are inside the footings, it will probably not be so important that a complete loop be present. Where the communication is poor, or when the tiles are outside the footings as in Colorado (Kl92), the need for a complete loop will likely be more important, to ensure that suction reaches the entire perimeter. The effect of incomplete exterior loops is discussed in Section 2.3.3a, in connection with drain tiles that discharge remote from the house.

- ***Nature of foundation wall.*** Where sub-slab communication is reasonably good, the nature of the foundation wall (block vs. poured concrete) does not appear to make any difference on sump/DTD performance. Of the 11 EPA study houses reduced below 2 pCi/L by sump/DTD, and of the 7 reduced below 1 pCi/L, more than half had block foundations. However, the data are too limited to determine whether block foundations become more of a problem when communication is poor.

  Of the five EPA study houses not reduced to 2 pCi/L or less, four had block foundations; however, as indicated earlier, some of these had other complications which may have been playing more of a role than was the block wall, such as very high source strengths and inadequately-treated adjoining wings. In the one house which was not reduced below 4 pCi/L (House C32D in Mi87), post-mitigation diagnostics suggested that the block foundation walls were apparently still a radon source, despite excellent depressurization of the sub-slab by the sump/DTD system (Br92); but again, the continued importance of the block walls was likely due to the unusually high source strength under this house. The one house with marginal communication that was reduced below 2 pCi/L (Ni89) did happen to have a poured concrete wall.

  In summary, sump/DTD with complete interior drain tile loops would generally be expected to do a fairly good job at treating block foundation walls. The suction is being distributed around the entire perimeter of the wall at its base, thus potentially preventing soil gas from entering the void network inside the wall. However, where potentially complicating factors exist, such as a high source strength (or perhaps such as poor sub-slab communication and an incomplete tile loop), the limited data suggest that the presence of a block wall rather than a poured concrete wall may increase the chances that system performance will be reduced.

- ***House size.*** One of the EPA study houses had a basement floor slab larger than 2,000 ft^2, and was reduced below 2 pCi/L with the sump/DTD system (Fi89). This house had a complete interior drain tile loop and aggregate beneath the slab. With the drain tiles aiding in distribution of the suction, it would be expected that sump/DTD should be able to treat fairly large slabs. This would especially be true when the tile loop is complete and/or where there is good sub-slab communication.

- ***Adjoining wings.*** The one study directly addressing the need to treat adjoining wings in basement houses (Mes90a) found that, with either a SSD or a sump/DTD system in the basement, the need to treat the adjoining slab on grade or crawl space was greatest when a) the adjoining wing provides important entry routes; and b) communication beneath the basement slab is poor. Five of EPA's 16 sump/DTD study houses were not reduced to 2 pCi/L or less; of these, 4 had adjoining wings which were potentially important sources, in view of the source strengths in those studies (Mi87, Sc88). In one of those cases (House C32D in Mi87), the adjoining wing was not being treated at all.

  In some cases where the drain tiles are *outside* the footings, these tiles have sometimes been observed to extend around the slab-on-grade wing as well as the basement in split-level houses (Kl92). In such cases, sump/DTD would have an increased likelihood of treating both wings effectively. (It should be noted that, when there are interior tiles leading to the basement sump, it is much less likely that these tiles will extend around the adjoining slab on grade.)

US EPA ARCHIVE DOCUMENT

- ***Sub-slab obstructions.*** No data are available on the ability of sump/DTD systems to deal with sub-slab obstructions, such as interior footings or forced-air ducts. If the tiles draining into the sump are interior tiles, then, unless the obstructions interrupt the tiles, it would be anticipated that the sump/DTD system would likely do a better job than SSD in distributing the suction field around these obstructions. If the tiles are exterior tiles, and especially if the obstruction is an interior footing supporting a load-bearing wall penetrating the slab, or is otherwise an interior entry route, it would be anticipated that the obstruction would have a greater likelihood of degrading sump/ DTD performance.

b) House operating variables

- ***Operation of central furnace fan, and exhaust fans.*** See comments in Section 2.3.1b, regarding the effect of these variables on SSD systems.

c) Mitigation system design variables

- ***Size of suction pipe.*** Active sump/DTD systems generally have system flows toward the upper end of the range observed for SSD systems. Because the drain tiles facilitate air collection from around the entire perimeter, flows are generally greater than 50 cfm, and are often greater than 100 cfm, with the 90-watt fans. At these flows, mitigators will probably often find that pipe diameters of at least 4 in. will be desirable to limit the suction loss and pipe flow noise.

- ***Degree of slab sealing.*** No data have been reported quantifying the effect of slab sealing on sump/DTD performance. Since the drain tile loop enables the system to effectively draw air from around the entire perimeter, it would be expected that caulking the wall/floor joint, wherever accessible, might significantly reduce the amount of air entrained by the system, if the joint is more than a hairline crack. Such reduced entrainment would reduce the heating/cooling penalty, if not improve system performance.

d) Mitigation system operating variables

- ***Fan capacity.*** Except possibly for a few of the earliest installations, all 16 of the sump/DTD systems installed under the EPA program have used 90-watt centrifugal in-line tubular fans with 6-in. couplings, operating at full capacity. Some mitigators report that, where communication is good, good radon reductions can be achieved with smaller fans (e.g., 50-watt fans with 5-in. couplings), despite the lower flows and suctions with those fans (Mes91).

  Data have not been reported quantifying the effect of fan capacity on system performance. Because of the higher flows sometimes observed from sump/DTD systems, use of smaller, lower-flow fans might sometimes reduce the radon reduction performance of the system.

  It would not generally be expected that higher-flow fans, larger than the 90-watt fans (capable of moving up to 270 cfm at zero static pressure), would be needed on residential sump/DTD systems. Flows too great to be handled by the 90-watt fans would usually be suggesting that air was short-circuiting into the system.

- ***Fan in suction vs. pressure.*** See Section 2.4. No data have been found where a system has been installed to pressurize a sump/drain tile network. Soils so poorly drained that a sump is necessary in the house, will probably not be sufficiently permeable to warrant sump/drain tile pressurization rather than depressurization.

  However, cases may occasionally be encountered where a sump has been installed in a house built on a highly permeable native soil, because of a particular builder's standard procedures or because of code requirements in the region. In such cases, sump pressurization might be considered.

e) Geology/climate variables

- ***Source strength.*** As with SSD systems (Section 2.3.1e), sump/DTD systems installed in houses having high source strengths have demonstrated the greatest difficulty in achieving post-mitigation indoor levels of 2 pCi/L and less (Mi87).

- ***Permeability of the underlying soil.*** See the discussion concerning SSD systems (Section 2.3.1e). Although the data base with sump/DTD systems is limited, it might be expected that, with the drain tiles located immediately beside the foundation walls, these systems might sometimes be better able than SSD systems to treat entry routes associated with block foundation walls, when the permeability of the underlying soil is poor. When the drain tiles are outside the footings, as commonly reported in Colorado (Kl92), relatively good permeability in the underlying soil may be among the factors that can contribute to extension of the suction field beneath the footings and beneath the slab (which, in that part of the country, is commonly poured on the native soil with no crushed rock).

- ***Climatic conditions.*** Although less data are available for sump/DTD systems than for SSD systems regarding the effects of climatic variables, the SSD results discussed in Section 2.3.1e would be expected to be generally applicable to sump/DTD systems as well.

f) Mitigation system durability

- ***Radon reduction performance.*** Of the 38 EPA mitigation installations in eastern Pennsylvania which have been monitored since 1985-87 (Fi91), one (House 29) involved sump/DTD with interior tiles. Winter-quarter alpha-track detector measurements in that house over the 3 years following installation remained very steady, with no one winter's reading varying from the three-winter average (1.9 pCi/L) by more than ± 0.5 pCi/L.

US EPA ARCHIVE DOCUMENT

In another study (Gad91), 4- to 6-month alpha-track measurements were repeated over a 2-year period in one house in New Jersey having a sump/DTD system (House 4 from Du90). Concentrations in the basement remained steady between 2 and 3 pCi/L during all five measurement periods.

In two houses in Ohio having sump/DTD systems (Fi90), quarterly alpha-track measurements over a 1-year period generally remained steady between 1 and 2 pCi/L in the basement, except during one quarter in one of the houses when the fan failed due to improper mounting.

During the year following installation of five sump/DTD systems in Maryland (Mes90a), annual alpha-track measurements were conducted (Mes90c). All five houses remained at 1 pCi/L and less over the year.

- ***System suctions and flows.*** System suctions and flows remained steady over the 3 years since installation, in the one sump/DTD installation among the 38 systems that have been monitored in Pennsylvania (Fi91).

- ***Sub-slab depressurizations.*** In the one Pennsylvania house (Fi91), sub-slab depressurizations remained very high (0.64-0.69 in. WG) in the 3 years since installation.

- ***Equipment durability.*** Nine of the 16 EPA sump/DTD installations were monitored for a year or more following installation. Only one of the nine fans failed, a wall-mounted unit in Ohio (Fi90). That failure was the result of improper mounting, rather than to an inherent problem with the fan.

- ***Homeowner intervention.*** No cases of homeowner intervention were reported for EPA's sump/DTD installations.

  In general, the frequency of such intervention for sump/DTD systems would be expected to be somewhat greater than that discussed in Section 2.3.1e in connection with SSD systems. The owner or service personnel will occasionally have to remove and re-install the sump cover for sump pump maintenance, and there would be some risk that the cover may not be re-installed properly.

2.3.3 Active Drain-Tile Depressurization (Above-Grade/Dry-Well Discharge)

Active DTD, in cases where the tiles discharge remote from the house (to an above-grade outfall or to an underground dry well), is less common than is sump/DTD in many parts of the country, but is fairly common in some locations.

Drain-tile systems with remote discharges commonly (but do not always) involve exterior drain tile loops, outside the footings. DTD systems on exterior tiles are expected to be more dependent upon the presence of nearly complete loops to ensure adequate treatment. That is, the loop should ideally extend around all four sides of the house in full basements, or around the three buried sides in walk-out basements. The need for a nearly complete loop is expected because the suction field from incomplete exterior loops will not always effectively extend through relatively impermeable native soil around the outside of the footings to reach sections of the foundation where tiles are not present, to treat the foundation wall and the wall/floor joint at those locations. Also, the exterior suction field can be hindered in extending underneath the footings or through the foundation wall to reach any entry routes that may exist in the central portion of the slab. However, cases have been reported where good reductions were achieved with DTD/remote discharge when the exterior tiles extended beside only one or two sides of the house; this good performance may be the result of relatively high permeability in the native soil.

By comparison, interior drain tiles (more common when the tiles drain to a sump) can better extend suction around the perimeter and to interior entry routes even when the loop is not complete, at least when aggregate is present beneath the slab. Because results to date from active DTD/remote discharge systems are all from systems treating exterior tiles, the observed performance with DTD/remote discharge are variable, depending upon the extent of the drain tile loop and the permeability of the native soil, probably among other factors.

Most of EPA's direct data on the performance of DTD/remote discharge systems are from tests in eight houses in Pennsylvania (Sc88, He89, Fi91). In all of these houses, the tiles were outside the footings, and drained to an above-grade discharge. The houses were all basements with block foundation walls.

Five of these houses had essentially complete exterior drain tile loops (Houses 10, 12, 15, 26 and 27). From winter-quarter alpha-track measurements in these houses over the 3 years following installation, three of these houses were reduced below 4 pCi/L in the basement, and two (Houses 15 and 26) were reduced below 2 pCi/L. Of the two houses not reduced below 4 pCi/L according to the alpha-track measurements (Houses 10 and 27), it has been demonstrated (Fi91) that the failure of the system to achieve levels below 4 pCi/L was not due to inadequate treatment of the foundation by the DTD/remote discharge system, but rather, was due to a) re-entrainment of the system exhaust (radon levels in the exhausts were 650 to 2,300 pCi/L); and b) in the case of House 10, radon released from well water (which contained 26,000 pCi/L). Redirection of the system exhausts, and treatment of the well water in House 10, reduced basement concentrations in both houses to below 2.5 pCi/L.

In summary, in all five EPA study houses having complete exterior loops, DTD/remote discharge reduced all five to below 4 pCi/L in the basement (actually, below 3 pCi/L), and reduced two below 2 pCi/L, when supplemented in one case by well water treatment. These concentrations generally correspond to radon reductions of 90 to 99+%, except in the case of House 12, where the relatively low pre-mitigation concentration (11 pCi/L) caused the percentage reduction to be lower (77%).

The remaining three houses with DTD/remote discharge systems in the Pennsylvania study had incomplete exterior loops (Houses 13, 14, and 16). In none of these houses was the DTD system by itself able to reduce the house below about 10 pCi/

L (Sc88, He89). In House 13, where the tiles may have been beside portions of three sides of the house, the DTD system by itself reduced basement concentrations to 11 pCi/L (84% reduction), based upon short-term measurements. Adding a separate one-pipe SSD system to supplement the DTD system in House 13 decreased levels to 2.5 pCi/L, based on 3- to 4-month alpha-track measurements during each of three winters. The other two houses had tiles beside only two sides of the house, or had an entire wing without tiles. The DTD system reduced basement levels to 15 pCi/L in House 14 (74% reduction) and 150 pCi/L in House 16 (37% reduction) (Sc88, He89). In these cases, the DTD systems were abandoned in favor of BWD systems.

In summary, in the three EPA study houses where the exterior loop was incomplete, the DTD system sometimes provided moderate to high reductions (74 to 84%) even when the tiles were beside only two or three sides of the house. In one case, only low reductions (37%) were achieved when the tiles did not extend around a wing of the house. Thus, even when the tiles are incomplete, depressurization of an exterior drain tile loop can sometimes be considered where only moderate reductions are needed. However, with the high pre-mitigation levels in the Pennsylvania houses, where high reductions were required, in no case was DTD adequate by itself to reduce levels below 4 pCi/L when the loop was not complete.

Commercial mitigators have reported good success with DTD/remote discharge in hundreds of houses in and near Colorado where exterior drain tile loops extended around all four sides of the house (full basements) or around the three buried sides (walk-out basements) (Kl92). In a few cases, good reductions were reported even in cases where the tiles extended beside only one or two sides of the house. These results were obtained despite the fact that there was no crushed rock beneath the slab; the slab was resting directly on graded native soil, which is commonly decomposed granite (a gravel/clay mix of variable permeability). The effective performance is attributed to possibly good permeability in the native soil in some cases, permitting the suction field to extend through the soil beneath the footings and beneath the slab; and the tendency of the exterior drain tiles to intersect channels through which utility lines penetrate through the foundation, thus providing a relatively high-permeability route for the suction field to extend through the foundation wall/footings and beneath the slab (Kl92).

In one other early study (Sa84), 80% radon reduction (to a post-mitigation level of 8 pCi/L) was achieved in one house by suction on an exterior drain tile loop with above-grade discharge. The tiles apparently extended around the three sides of the house that were below grade, forming a U with each leg of the U discharging to grade. Suction was drawn by two 50- to 60-watt squirrel-cage blowers, one on each leg of the U; squirrel-cage blowers tend to produce higher flows and lower suctions than do the 90-watt centrifugal fans commonly used today. This was a "berm" house with poured concrete foundation walls, good sub-slab aggregate, and forced-air supply ducts beneath the slab.

The following discussion summarizes the results to date with DTD/remote discharge systems, addressing the individual variables.

a) House design variables

- ***Sub-slab communication.*** The effect of sub-slab communication on the performance of the exterior DTD systems discussed above is unclear.

  Many of the numerous Colorado houses discussed above (Kl92) did not have crushed rock beneath the slab, suggesting limited communication; yet, good radon reductions were reported. This result could be suggesting that sub-slab communication may not be critical if the exterior tiles are beside all three or four buried sides of the house. The permeability of the native soil in this region is variable; in some cases, this permeability may have been high enough to help compensate for the lack of crushed rock. Also, it is not recorded to what extent these houses may have had soil gas entry routes at the interior of the slab, which might have challenged the DTD system in these potentially poor-communication cases if the suction field were extending only weakly inward from the perimeter. Sub-slab communication would be expected to be less important for exterior DTD performance if the main soil gas entry routes are the perimeter walls and the perimeter wall/floor joint.

  Among the EPA study houses, the two Pennsylvania houses giving the best results above (Houses 15 and 26, both having complete loops and achieving less than 2 pCi/L in the basement), were the two houses having the poorest communication (Fi91). This result would suggest that, with exterior tiles (which are probably functioning by treating the base of the block foundation wall and the wall/floor joint), the completeness of the tile loop is more important than good communication beneath the slab. The other three houses having complete loops and ultimately being reduced to 2 to 4 pCi/L (Houses 10, 12, and 27), had much better communication than did Houses 15 and 26.

  Among these five Pennsylvania houses having complete exterior loops, the two houses having poor sub-slab communication had the lowest sub-slab depressurizations created by the exterior DTD system (with no depressurization measured at some of the test holes in House 26, and respectable readings of generally 0.014-0.048 in. WG in House 15). By comparison, two of the three houses having good communication achieved better sub-slab depressurizations, 0.056-0.085 in. WG; the third house with good communication (House 12) had readings more comparable to the poor-communication houses, 0.014-0.018 in. WG. (For reference, the one sump/DTD installation in Pennsylvania with *interior* tiles and good communication achieved sub-slab depressurizations of 0.625-0.685 in. WG.) From the above measurements, it would appear that good sub-slab communication improves the chances that adequate sub-slab depressurizations will be achieved with exterior DTD systems, increasing the likelihood that any entry routes in the central

US EPA ARCHIVE DOCUMENT

portion of the slab would be treated. However, from the House 12 results, good sub-slab communication does not ensure that these systems will necessarily achieve high depressurizations. And, especially from the House 26 results, where both communication and sub-slab depressurizations were poor, but where levels below 2 pCi/L were consistently achieved nevertheless, it is apparent that good communication and good depressurization are not necessarily required for good radon reductions. This confirms that treatment of the perimeter block walls and the wall/floor joint (generally aided by having a complete drain tile loop), rather than achieving good sub-slab depressurization, is the key requirement for exterior DTD systems.

The three Pennsylvania houses having only partial exterior loops (Houses 13, 14, and 16) each had variable communication, ranging from excellent under some portions of each slab to very poor under other parts (Fi91). House 16 had generally good communication beneath the basement slab, but very poor communication beneath the adjoining paved crawl-space addition where the drain tiles did not extend. Thus, in these houses, it is not possible to assess to what extent the inadequate performance of the DTD/remote discharge system was due to the incomplete tile loops, and to what extent it was impacted by poor sub-slab communication. But, as indicated above, it is suspected that, in the absence of major entry routes in the central portion of the slab, the completeness of the loop is probably the more important variable.

The one house addressed in Sa84, which had essentially a complete loop (on the three sides of the house below grade), had good aggregate. However, due to the sub-slab forced-air ducts, communication was probably not good. The lower percentage reduction (80%) and higher residual radon levels (8 pCi/L) in this house were more likely due to the unusual features of this house (a berm house) and to the design of this early DTD system, than to the nature of the sub-slab communication.

- ***Extent of drain tile loop.*** As discussed above, the exterior tiles common with DTD/ remote discharge systems may function to a large extent by treating the base of the foundation wall and the wall/floor joint. The extent to which the suction field from these systems will extend beneath the slab is quite variable, and is not always clearly related to how good the sub-slab communication is. In addition, with the exterior tiles, the suction field probably extends only weakly through the native soil outside the footings to regions where the tiles are not present, if the native soil has relatively low permeability. Under these conditions, the extent of the drain tile loop could be a very important variable in determining the effectiveness of these systems with exterior tiles. It may often be important that the tiles be located on three or four sides of the house.

  However, experience with DTD/remote discharge in Colorado indicates that suction on exterior tiles can sometimes be effective even in cases where the tiles are on only one or two sides of the house (Kl92). Success with such partial loops appears to depend upon relatively good permeability in the native soil underlying the foundation. Under this condition, the suction field from the partial loop might be expected to better extend around the portion of the perimeter without tiles, and beneath the slab.

- ***Entry routes in center of slab.*** The available data are not adequate to quantify the effects of interior entry routes on the performance of exterior DTD systems. Only one of the Pennsylvania houses had a major interior route (House 27, which had a hollow-block structure penetrating the middle of the slab to support a fireplace on the floor above) (He87). The system in House 27 achieved levels below 4 pCi/L (93% reduction) despite this interior entry route, perhaps because the complete loop and the good sub-slab communication resulted in sub-slab depressurizations of 0.056-0.081 in. WG.

  From the preceding discussion, it would be expected that interior entry routes will likely be most important in cases where poor sub-slab communication, poor permeability in the native soil, an incomplete drain tile loop, or other factors prevent the suction field from the exterior tiles from extending beneath the slab.

- ***Nature of the foundation wall.*** The available data are not sufficient to determine the impact if the foundation wall were poured concrete rather than block.

  All of the houses in Pennsylvania had block foundations. Complete drain tile loops are ideally located to treat entry through block walls, so that the nature of the foundation wall may not be particularly important when the loop is complete. Since poured concrete walls substantially reduce wall-related entry routes, exterior DTD systems with partial loops may perform better when the wall is poured, since leaving a portion of the wall untreated would then be less of a problem. Poured concrete walls might further hinder the extension of the exterior DTD suction field into the region beneath the slab, compared to relatively porous block walls.

- ***House size.*** The data are insufficient to enable a definitive statement regarding the effect of house size. Only one of the five Pennsylvania houses having complete loops had a slab larger than 1,000 ft^2 (House 10, where the slab was 1,300 ft^2). Presumably, if the exterior drain tile loop were complete and were thus treating the entire perimeter, the size of the slab would not be particularly important, unless there was a significant entry route in the central portion of the slab.

- ***Adjoining wings.*** Experience in Colorado suggests that, in many cases, exterior tiles around a basement will also extend around an adjoining slab-on-grade wing (Kl92). In such cases, it would be anticipated that DTD/remote discharge may effectively treat both wings.

  The reader should be aware that, in other parts of the country, it is possible that exterior drain tiles will not extend around the adjoining wing, possibly leaving un-

US EPA ARCHIVE DOCUMENT

treated both the adjoining wing and the side of the basement abutting the wing. None of the EPA study houses in Pennsylvania where DTD/remote discharge has been effectively tested had adjoining wings.

- ***Sub-slab obstructions.*** The house in Sa84, with sub-slab forced-air ducts, is the only house reported with an exterior DTD system having sub-slab obstructions. The other unique features of this berm house prevent a clear interpretation of the effects of these ducts on system performance.

  Where an obstruction is not associated with an interior entry route, it might be expected that the obstruction will not significantly interfere with exterior DTD performance, since the system appears to perform largely by treating the foundation wall and wall/floor joint immediately adjacent to the tiles. But where the obstructions are associated with interior entry routes—e.g., an interior load-bearing wall or sub-slab ducts—it could be expected that the obstruction will sometimes degrade system performance, by providing an entry route potentially not effectively treatable by the exterior system.

b) House operating variables

- ***Operation of central furnace fan, and exhaust fans.*** See comments in Section 2.3.1b. To the extent that exterior DTD/remote discharge systems will sometimes provide lesser sub-slab depressurizations that will SSD or sump/interior DTD systems, the exterior DTD system may sometimes be more prone to being overwhelmed by basement depressurizations created by these fans.

c) Mitigation system design variables

- ***Size of suction pipe.*** Four-in. diameter pipe has been used on all of the EPA-sponsored DTD/remote discharge installations (Sc88). The flows from all five of the systems still operating in Pennsylvania have been above 100 cfm, confirming that pipe of at least that size will generally be needed. Flows in the Colorado systems have generally been somewhat lower, 50 to 80 cfm (Kl92); 4-in. piping has routinely been used in the Colorado installations as well. The 4-in. piping is also convenient for connecting to the exterior drain tiles, which are usually either 3 or 4 in. in diameter.

- ***Degree of slab sealing.*** No data have been reported quantifying the effect of slab sealing on DTD/remote discharge performance. As with the sump/DTD systems (Section 2.3.2c), because the tiles are immediately beside the footings, caulking the wall/floor joint would usually be a desirable step wherever the joint is accessible and whenever it is more than a hairline crack.

d) Mitigation system operating variables

- ***Fan capacity.*** All five of the exterior DTD systems in Pennsylvania have the 90-watt centrifugal tubular fans. Given the relatively high flows in these systems (>100 cfm) and the need for high suctions in an attempt to extend the suction field under the slab, the 90-watt fans will usually be the logical choice, rather than a smaller unit. The 90-watt fans have also routinely been used in the Colorado installations.

- ***Fan in suction vs. pressure.*** See Section 2.4. Soils so poorly drained that drain tiles are necessary will not usually be sufficiently permeable to warrant DTD pressurization rather than depressurization.

e) Geology/climate variables

See the discussion for these variables in Sections 2.3.1e.

f) Mitigation system durability

- ***Radon reduction performance.*** The only durability data on DTD/remote discharge systems are from the five houses in Pennsylvania (Fi91). In all cases except House 10, where exhaust re-entrainment and well water contributions caused larger fluctuations, none of the winter-quarter alpha-track measurements over a three-year period varied from the three-winter average by more than ± 1 pCi/L. In no case was a progressive degradation in performance apparent.

- ***System suctions and flows.*** In all five Pennsylvania houses, the suctions and flows in the DTD suction pipe remained steady, within the accuracy of the measurement, over the 3 to 4 years following installation.

- ***Sub-slab depressurizations.*** No degradation in sub-slab depressurizations were apparent over the 3 to 4 years after installation.

- ***Equipment durability.*** One of the five 90-watt DTD/remote discharge fans (in House 15) failed over the 4 years since installation. This fan failed due to bearing failure, the only fan in Pennsylvania to fail for a reason other than capacitor failure. This failure rate (one in five) is roughly the same as the rate for fans on the SSD systems.

- ***Homeowner intervention.*** In one case (House 15), the homeowner turned the fan off due to the noise created by the worn bearings.

2.3.4 Active Block-Wall Depressurization

BWD has occasionally been used as a supplement to SSD in basement houses, in both R&D study houses and in commercial installations, when one or more of the block foundation walls had appeared to be an important radon entry route which has not been adequately treated by SSD alone. The BWD component in these combined SSD+BWD systems is usually accomplished using the "individual pipe" approach, i.e., by inserting a PVC pipe into one or more of the block cavities in the wall(s) to be treated, and tying this pipe into the SSD system piping.

In the large majority of cases, SSD alone will be sufficient, and the BWD component will be unnecessary. However, in

some parts of the country—in particular where basement sub-slab communication is poor or where the source strength is high—mitigators are commonly prepared to supplement SSD systems with BWD components in block-foundation houses, where high radon concentrations inside the walls or other local conditions suggest that a BWD leg into one or more of the walls might be necessary (Mes90b, Sh90, Jo91).

BWD as a stand-alone method, without SSD, has been tested in a few R&D study houses having basements. It does not appear to have been widely used commercially, although mitigators have occasionally encountered isolated cases where one or two block walls were particularly important radon entry routes and where a stand-alone BWD system treating those walls proved to be extremely effective. One firm markets a "baseboard-duct" BWD system nationally through licensees (El88), sometimes used in conjunction with basement water control. But even this BWD system often has a SSD component; the baseboard ducts are often connected to a retrofitted, perforated sump crock installed through the basement slab to handle water collected in the baseboard ducting, and the suction is drawn on this sump (providing SSD) as well as on the baseboard channel drain.

From the limited available data, BWD as a stand-alone method can be effective in basement houses suited to this approach. Well-suited houses include houses which permit good closure of all major wall openings and which do not have major slab-related entry routes remote from the walls. Usually, stand-alone BWD will be considered primarily in houses where the walls are the predominant entry route, and where marginal or poor sub-slab communication will prevent a SSD system from adequately treating the walls.

Stand-alone BWD has also been made to perform reasonably well in less suitable houses, though this has often required some effort to adequately close wall openings and to boost suction in the walls (e.g., with multiple fans or more suction pipes). Moreover, the ability to reliably achieve indoor levels below 4 pCi/L with stand-alone BWD systems in such less amenable houses has not been consistently demonstrated. EPA's experience has suggested than one cannot always reliably predict which houses will be truly suitable, nor how much effort will be required to make the stand-alone BWD system give the desired reductions. In addition, due to the amount of house air that can be drawn into the system through the walls, the house heating/cooling penalty and the threat of combustion appliance backdrafting are likely to be increased, especially in houses less amenable to the BWD approach.

Results from stand-alone BWD systems have been reported only for seven basement houses in Pennsylvania (He87, Sc88), one basement house having an adjoining slab on grade in New Jersey (Tu89), and three basement houses in New York (Ni89). (The Pennsylvania study also included five other basement houses having block-wall *pressurization* systems, discussed in Section 2.4.)

Of the seven houses in Pennsylvania, six (Houses 3, 7, 8, 14, 16, and 19) involved the individual-pipe variation of the BWD process. In these five, there were one or more pipes installed in each of the perimeter walls, with House 16 having nine pipes. Among these six houses having stand-alone individual-pipe BWD systems,

- All six of the houses except House 19 achieved radon reductions of 92 to 99% in the basement. The percentage reductions are high because the pre-mitigation levels were extremely elevated, as great as 400 pCi/L. Thus, despite the high percentages, only three of the houses were reduced below 4 pCi/L (with two of these three being reduced to 2 pCi/L and less, and one to 1 pCi/L).

- Four of these houses (Houses 3, 8, 14, and 19) were particularly suitable for BWD: the walls were unfinished and accessible, the top block voids were generally accessible for closure, and there were no complications such as a block fireplace structure in the walls, exterior veneer, or high block porosity. Houses 3, 8, and 14 were reduced below 4 pCi/L with a single fan depressurizing the system; Houses 3 and 14 were reduced below 2 pCi/L. These low post-mitigation levels have been confirmed by winter-quarter alpha-track measurements over the 3 years following installation. These three houses, which were apparent beforehand as being distinctly amenable to the BWD approach, are the only Pennsylvania houses where BWD has been unambiguously successful.

- The fourth "amenable" house above (House 19) has consistently averaged 31 pCi/L in the basement since installation (no reduction from the pre-mitigation value of 32 pCi/L) (Fi91). All major openings in the walls had been effectively closed, and smoke tracer testing confirmed that the single fan was depressurizing the wall voids every-where. The slab in this house is badly cracked, and diagnostic testing confirmed that soil gas is entering the house through these cracks. Thus, the BWD system would appear to be effectively treating the walls, but the suction field is not extending beneath the slab to treat the slab-related routes remote from the walls. As a result, the ability to identify *a priori* houses which will be truly amenable to stand-alone BWD is in question. As a minimum, the absence of potentially important slab-related entry routes remote from the walls would appear to be one of the criteria for determining amenability. The walls (and the wall/floor joint) must be the primary (or sole) entry routes.

  As a point of interest, the BWD system in House 19—so unsuccessful in reducing basement concentrations—is extremely effective in reducing levels upstairs, to below 1 pCi/L (Sc89, Fi91). The BWD system is thought to be depressurizing the basement, preventing the flow of the 31 pCi/L basement air upstairs.

- Two of the six Pennsylvania houses having stand-alone individual-pipe BWD systems (Houses 7 and 16) offered difficulties in wall closure. These difficulties included inaccessible top voids, and exterior brick veneer. While radon reductions of 92 and 98% were achieved in these houses, respectively, basement levels remained elevated (32 pCi/L in House 7 according to

US EPA ARCHIVE DOCUMENT

short-term measurements, 5.3 pCi/L in House 16 based upon three winters of alpha-track measurements). To achieve these reductions, various special steps were taken in system design (using two suction fans in House 7, using 6-in. diameter piping for the major piping run in House 16 to reduce pressure loss). Had the pre-mitigation concentrations in these two houses been lower, the percentage reductions would have been lower, but it is possible that post-mitigation levels might have gotten below 4 pCi/L. These results indicate that in houses not amenable to stand-alone BWD, good reductions can sometimes still be achieved, but special steps may be required, and the ability to reduce levels below 4 pCi/L is uncertain. In these cases, stand-alone BWD is not the best choice.

In House 16, the nine-pipe BWD system was subsequently temporarily replaced with a three-pipe SSD system, to determine which would perform better (Fi91). The two SSD pipes in the basement very effectively depressurized the entire basement slab (to 0.323-0.363 in. WG), although the one SSD pipe in the adjoining paved crawl-space addition achieved more marginal sub-slab depressurizations in that wing (0.001-0.020 in. WG). Even with apparently excellent treatment of the basement slab, the SSD system alone resulted in distinctly higher indoor radon levels than did the BWD system alone (13 pCi/L in the basement, compared to 4 pCi/L with the BWD system, and 5 pCi/L upstairs, compared to 2 pCi/L with the BWD system). While the marginal treatment of the paved crawl space by the SSD system might have been contributing to the reduced performance of that system, these results suggest there can be cases where SSD systems cannot adequately treat all of the wall-related entry routes, even when the system is depressurizing the sub-slab very well. Thus, there will be cases where the SSD system must be supplemented with a BWD system. Possibly, placement of additional SSD pipes near the walls in House 16 could have improved the wall treatment by the SSD system. However, House 16 would appear to be a case where a combination of SSD + BWD could be the optimum approach for reliably reducing the house below 4 pCi/L.

The one house tested with a stand-alone BWD system in New Jersey (Tu89) was an individual-pipe system in a basement house having an adjoining slab on grade (House LBL-10). Two BWD suction pipes were installed in the wall voids of the stem wall separating the two wings. This relatively simple BWD system reduced basement concentrations from 146 pCi/L to 3 pCi/L. By comparison, a stand-alone SSD system tested in this house (with two SSD pipes extending all the way through the stem wall to beneath the adjoining slab on grade) gave about the same results. The success of the two-pipe BWD system in New Jersey is very different from the experience with the more extensive systems in Pennsylvania. The difference might result from the stem wall being a particularly important source in the New Jersey house, and/or to some depressurization beneath the adjoining slab being obtained by the BWD system.

The three New York houses (AR-01, OP-01, and OP-16) having stand-alone BWD systems were all individual-pipe installations in houses having marginal sub-slab communication (Ni89). In the two houses which either had solid cap blocks (AR-01) or where a substantial effort was undertaken to close the voids in the top course of block (OP-16), suction on one to three walls reduced radon levels to about 2 pCi/L (from pre-mitigation levels of 17 to 55 pCi/L). BWD had been selected for these houses because higher radon levels had been measured inside the block cavities than beneath the slab, suggesting that wall entry was important.

Even in the third New York house (OP-01), where no wall sealing was performed and where suction was drawn only on one wall, levels were reportedly reduced from 21 to about 3 pCi/L. In House OP-01, this one-wall BWD system gave lower post-mitigation readings than did a one-pipe SSD system which was tested back-to-back with the BWD system. The SSD system alone gave readings of 5 to 7 pCi/L, compared to the 3 pCi/L for the BWD system alone. The apparent success of the BWD system in House OP-01 was achieved despite several factors which would suggest that it would not be amenable to BWD as a stand-alone method: unsealable top block voids; the ability to treat only one of the walls; high sub-slab radon concentrations; and an extensively cracked slab, offering entry routes remote from the foundation walls. This success in OP-01 may have been due, at least in part, to the following factors (Br92):

- the block foundation walls extended all the way up to the attic. Thus, even though the top voids (in the attic) could not be sealed, there would be an increased resistance to air flow from the top voids down into the BWD system, increasing the suctions that could be maintained inside the cavities at basement level.

- three suction pipes were installed in the one wall, with the result that suction is thought to have extended around the corners into the adjoining walls. Thus, at least parts of two other walls were also being treated. Perhaps these three walls were the major entry routes.

- the post-mitigation level was probably depressed by the fact that this measurement was made during mild weather. Cold-weather post-mitigation results were not reported.

One of the seven Pennsylvania houses having a stand-alone BWD system (House 11) received the baseboard-duct variation of the technology (He87, Sc88). This particular house was in fact one (end) unit in a multi-unit townhouse structure, with a perimeter channel drain around the entire structure. Only moderate radon reductions (about 65%, to 21 pCi/L) were achieved. The testing in this one unit could not fairly represent the results that might be achieved in a detached house where the full perimeter channel drain could be accessed; in addition, the owners of this house discontinued participation in the project before testing could be completed. Thus, the results from this townhouse are not felt to be a fair representation of the performance that might be expected with a stand-alone baseboard-duct system in a detached house.

US EPA ARCHIVE DOCUMENT

BWD (generally the individual-pipe variation) has been tested in a number of cases as a supplement to a SSD system. The benefits of adding a BWD component to a SSD system will depend upon the significance of the walls as an entry routes, and the ability of the SSD system by itself to address wall-related entry. A BWD component is most commonly needed when sub-slab communication is poor, hindering the extension of the SSD suction field around the base of the walls.

In three houses in Pennsylvania, SSD systems were tested with and without a BWD component. In each case, the BWD component consisted of one or more individual pipes into each of the perimeter walls, connected into the SSD piping and treated by a single fan. In one house with moderate to good communication (House 3), a one-pipe SSD system depressurized the sub-slab to 0.024-0.093 in. WG, and was adequate to reduce basement levels to about 3 pCi/L; a supplemental five-pipe BWD component further reduced levels below 2 pCi/L (Fi91). In the second house, House 20, which had poor communication (He87, Sc88), a BWD component was necessary in order to reduce basement concentrations to near 4 pCi/L; the SSD system by itself was marginally inadequate, achieving 5 to 8 pCi/L in the basement. In this house, the BWD component consisted of one 2-in. diameter (equivalent) wall suction pipe tapped into each of the five 4-in. SSD pipes, which were immediately beside the walls. The BWD pipes caused suction in the SSD pipes to fall from about 0.9 in. WG to about 0.2 in. WG. (Well water treatment was also necessary in House 20, as discussed in Fi91.)

But in the third house in Pennsylvania (House 7), with variable communication (ranging from low to good), addition of a BWD component caused performance to *degrade* significantly (increasing basement concentrations from about 4 to 26 pCi/L). Analogous to House 20, the BWD component in House 7 was achieved by tapping one 2-in. (equivalent) wall suction pipe into each of the seven 4-in. SSD pipes. As in House 20, the air flow out of the BWD component of the system in House 7 caused the suction in the SSD pipes to decrease significantly, from about 0.9 in. WG to about 0.1 in. WG. But in House 7, the reduced suction in the SSD piping resulted in a significant reduction in the performance of the SSD component of the system which more than offset any benefits from the BWD treatment of the walls.

In one basement house in New Jersey having an adjoining paved crawl space and having poor communication (LBL-12 in Tu89), SSD in the basement reduced levels only to 5 pCi/L. Addition of a suction pipe into the cavities of the block wall separating the two wings, and connecting it to the SSD system, reduced levels to 2.3 pCi/L.

In testing in New York (Ni89), BWD was tested in conjunction with SSD in four houses. One of these houses (OP-01), a full basement house, has been discussed earlier in connection with testing of BWD alone and SSD alone. In House OP-01, combined operation of the one-pipe SSD system and the BWD system on one wall reduced basement levels from 21 pCi/L to about 3 pCi/L during cold weather. By comparison, SSD alone had achieved only 5-7 pCi/L; BWD alone had achieved 3 pCi/L, but that had been during mild weather.

The other three New York houses had been basement houses having adjoining slabs on grade (AR-04, -05, and -09), reportedly with relatively good communication beneath the basement slab. Grab radon measurements inside the block cavities were in all cases comparable to, or higher than, the radon measured beneath the basement slab, indicating the importance of wall-related entry. In each case, a SSD system in the basement was supplemented by a BWD leg treating the stem wall between the two wings. In all three houses, adding the BWD component made a significant improvement compared to the SSD component alone. In two of the cases, the BWD component was required to reduce basement concentrations below 4 pCi/L (achieving levels of about 2 pCi/L).

In these three New York houses (Ni89), and in New Jersey House LBL-12 discussed previously (Tu89), the depressurization of the stem wall may have also been providing some depressurization beneath the adjoining slab on grade. To that extent, these results would be generally consistent with results observed by others (Mes90a), indicating that, in basement houses having adjoining slabs, SSD beneath the adjoining slab is sometimes required in addition to SSD in the basement. Where a BWD component is being added to a basement SSD system, the stem wall separating the basement from any adjoining wing is commonly the first wall to which suction is applied; it will often contain the highest radon levels, and, as stated above, suction on this stem wall may also be treating the adjoining wing.

In three basement houses in Tennessee having adjoining crawl spaces (Py90), with poor communication beneath the basement slab, a BWD component (along with sealing of the top block voids and, in one case, the surface of the highly-porous block wall) was required, in addition to two-pipe, two-fan SSD systems, in order to reduce levels to 4 pCi/L. In the two houses where crawl-space soil was exposed, a SMD component was required also.

The preceding discussion has focused on BWD (and SSD + BWD) systems in basement houses, since almost all of the BWD data have been obtained on that substructure type. BWD components to SSD systems have been tested in three cases in slab-on-grade houses.

In one slab-on-grade house in Ohio having a block foundation wall beneath the slab perimeter (House 1 in He91a), suction was drawn on a hole cored horizontally all the way through the foundation wall from outdoors, below slab level. The 90-watt fan was mounted directly over this hole, with no pipe extending through the wall, and with no attempt to close the block cores surrounding the hole. Under these circumstances, there should be a significant BWD component to this SSD+BWD system. This combined system reduced indoor levels from about 20 to about 3 pCi/L. By comparison, when the fan was remounted on a pipe inserted through the wall, and the surrounding voids foamed in an effort to reduce the BWD component, levels rose to about 8 pCi/L. Levels fell again when the pipe and foam were removed, re-establishing the BWD component. Thus, the BWD component can clearly be important in some cases. Based upon results from some of the other slab-on-grade houses tested in the Ohio project, the BWD component appeared to be most important where the

SSD system was marginal (i.e., in large slabs having only one suction point).

In two other slab-on-grade houses in New Jersey (Os89a), a combination of SSD + BWD was tested, again using suction pipes penetrating horizontally through the block foundation wall from outdoors. In each of these houses, there were three suction pipes manifolded to a single fan, with one pipe penetrating all the way through the wall into the sub-slab region, and the other two pipes terminating inside the block cavities. Radon reductions of 99% were obtained in both of these houses, reducing indoor levels from pre-mitigation values of 700-1,000 pCi/L, to post-mitigation concentrations of 6-8 pCi/L. (The effects of deleting the BWD component were not tested.)

The importance of the BWD component in these slab-on-grade houses probably resulted from the treatment of wall-related soil gas entry, and from extension of a sub-slab suction field through the relatively permeable backfill material around the perimeter immediately inside the footings. As discussed in Section 2.3.1c, in connection with perimeter placement of SSD pipes in Florida slab-on-grade houses (Fo90, Fo92), air short-circuiting into the SSD+BWD system through the porous blocks might sometimes be expected to degrade system performance. In the Ohio house discussed above, the SSD+BWD system was subject to being overwhelmed when the forced-air furnace fan (with sub-slab supply ducts) was operated continuously. Thus, reliable guidance cannot currently be offered regarding the conditions under which a BWD component can best be added to a SSD system in slab-on-grade houses.

The following discussion summarizes the results to date with BWD, addressing the individual variables.

a) House design variables

- ***Sub-slab communication.*** A stand-alone BWD system (or a BWD component on a SSD system) appears most applicable when sub-slab communication is poor (Ni89, Tu89, Py90, Sh90, Fi91, Jo91). This is undoubtedly because the poor sub-slab communication prevents the SSD system from effectively intercepting the soil gas before it enters the wall void network.

  However, where the walls are major entry routes, BWD components can occasionally still be important even when sub-slab communication is good. The results from Houses 3 and 16 in Pennsylvania (Fi91) demonstrate that, even when communication is good and a SSD system can effectively depressurize the entire sub-slab, a BWD component can still provide improved performance. In the case of House 16, a stand-alone BWD system provided better reductions than a stand-alone SSD system. The unusually high source strengths under these houses may be the explanation why effective sub-slab depressurization by the SSD system was unable to adequately reduce radon entry through the walls.

  On the other hand, where sub-slab communication is marginal, adding a multi-pipe BWD component to a SSD system can sometimes actually reduce overall system performance. In House 7 in Pennsylvania, high suctions were needed in the SSD system piping in order to achieve adequate suction field extension beneath the slab; addition of the BWD pipes resulted in high air flows from the walls which reduced the system suction and degraded the overall performance.

- ***Access to close major wall openings.*** Best results with BWD systems have consistently been achieved in cases where major wall openings either have not existed or have been accessible for closure (He87, Sc88, Ni89, Py90). It is particularly important that the block voids at the top of the wall be closed, either with a solid cap block installed during construction, or through a sealing effort during mitigation. When major wall openings exist and cannot be effectively closed, there is an increased likelihood had poorer BWD performance will be achieved (e.g., Houses 7 and 16 in Sc88). One house where good BWD performance was achieved despite the inability to close the top block voids (House OP-01 in Ni89) was atypical; the block walls extended up into the attic, creating increased flow resistance for air flowing down through the top voids, thus increasing the suction that the BWD system was able to maintain in the cavities at basement level.

- ***Entry routes in center of slab.*** The data from House 19 in Pennsylvania (He87, Sc88) suggest that slab-related entry routes remote from the walls (such as extensive slab cracking) can sometimes make it impossible for a stand-alone BWD system to adequately treat the house, necessitating a SSD component. However, occasional cases have been reported where a stand-alone system gave adequate performance despite extensive slab cracking (House OP-01 in Ni89). The ability of stand-alone BWD to adequately treat such houses will depend upon a) whether the perimeter walls are the predominant entry route, despite the slab cracks; and/or b) the ability of BWD suction to extend under the slab to treat the interior cracks.

  Stand-alone BWD systems have been found to create measurable (but often marginal) depressurizations beneath the slab; depressurizations ranging from 0.001 to 0.012 in. WG have been measured under the central slab in Houses 8, 14, and 16 in Pennsylvania (Fi91). Under these conditions, some ability to treat interior slab entry routes would be anticipated. Nevertheless, it is recommended that SSD components always be considered in conjunction with BWD systems, especially when there are interior slab-related entry routes.

- ***Nature of the foundation wall.*** BWD is applicable, of course, only with block foundation walls. Best performance has generally been observed where the walls: a) have solid cap blocks as the top course, or have top void accessible for closure; b) walls not containing complicating entry routes such as block fireplace structures; and c) are not unusually porous.

- ***House size.*** The data are insufficient to enable a definitive statement regarding the effect of house size. Among the houses where stand-alone BWD systems have given the best results, many have had relatively small slabs (570 to 860 ft^2), but one (House 14 in Pennsylvania) had a slab of 1,300 ft^2. And among the houses where stand-alone BWD systems have given poorer results, one had a small slab (570 ft^2), one a larger slab (1,100 ft^2). Intuitively, houses having longer perimeters are likely to require more BWD suction pipes with stand-alone systems; for example, House 16, with 1,040 ft^2 of slab area, received nine BWD pipes, and is still not reliably below 4 pCi/L in the basement.

  There is no evidence that slab size plays a role in determining whether a BWD leg must be added to a SSD system, unless perhaps the increased slab size is combined with poor communication.

- ***Adjoining wings.*** In a total of four basement houses having adjoining slab-on-grade or paved crawl-space wings (Ni89, Tu89), depressurization of the block stem wall separating the wings proved to be necessary in conjunction with SSD in the basement. This could be suggesting that, with adjoining wings, the stem wall can be a particularly important entry route, perhaps because the soil adjoining the basement beside that wall is "capped" with a slab that helps direct the soil gas toward that wall.

  SSD beneath an adjoining slab on grade or paved crawl space, as a supplement to SSD beneath the basement slab, has sometimes been found to be necessary to effectively treat such combined-substructure houses (Sc88, Mes90a). The BWD treatment of the stem wall in the four houses in Ni89 and Tu89 may well have also been providing a SSD component under the adjoining slab. And likewise, the SSD treatment of the adjoining wings in Sc88 and Mes90a was likely also providing a BWD component treating the stem wall. In all cases in Sc88 and Mes90a, the SSD pipes treating the adjoining slab were inserted horizontally through the stem wall from inside the basement; hence, the suction beneath the adjoining slab was being generated immediately beside the stem wall.

  In summary, it is likely that, in combined-substructure houses with block foundations, the radon entry associated with the adjoining wing is a combination of a) entry into the basement through the block stem wall; and b) entry directly into the adjoining wing through routes in that wing. The relative importance of these two pathways will likely vary depending upon site-specific factors. The stem-wall BWD components added in Ni89 and Tu89, and the adjoining-slab SSD legs added in Sc88 and Mes90a, were both likely providing a combination of SSD + BWD treating both pathways. The adjoining-slab SSD approach, where the pipes penetrate all the way through the wall into the region beneath the adjoining slab, would likely be better at treating the entry directly into the adjoining wing.

  The data base for stand-alone BWD systems in combined-substructure houses is inadequate to permit an assessment regarding the effect of an adjoining wing on the design and performance of such systems. BWD as a stand-alone technique has been reported in only one house having an adjoining wing (House 16 in Sc88, where three individual BWD pipes in an adjoining paved crawl space supplemented six BWD pipes in the basement). In this case, the treatment of the walls in both wings was inadequate to reliably reduce the basement from 395 pCi/L to below 4 pCi/L (achieving 5.3 pCi/L according to winter-quarter alpha-track averages). The living area was reduced below 2 pCi/L, according to the winter-quarter alpha-tracks. It is suspected that residual radon levels would have been higher if BWD pipes had not been extended into the walls of the adjoining crawl space. Poor communication beneath the crawl-space slab was probably preventing the BWD pipe in the basement stem wall from establishing much of a SSD component beneath that adjoining slab. However, testing was not conducted with and without the BWD pipes in the walls of the adjoining wing; thus, it is not possible to quantify how important it was to treat the adjoining wing in that way, nor to understand the complications being created by the adjoining wing in this one house.

b) House operating variables

- ***Operation of central furnace fan, and exhaust fans.*** As discussed in Section 2.3.1b, central furnace fans (with cold air returns in the basement), and various other exhaust fans (including whole-house exhaust fans, attic fans, and clothes driers), have been observed to cause basement depressurizations of 0.001 to 0.02 in. WG. No quantitative measurements have been reported for the depressurizations created by BWD systems inside block walls. However, pressure measurements in the BWD piping are generally low, 0.01 to 0.15 in. WG (Sc88), one-tenth or less of what is commonly measured in SSD pipes. These low suctions in the piping suggest that the depressurizations inside the wall are probably quite low, and perhaps not measurable in some locations. Stand-alone BWD systems have been reported to create sub-slab depressurizations ranging from 0.001 to 0.012 in. WG in three Pennsylvania houses having moderate to good sub-slab communication (Fi91); these depressurizations are much lower than are commonly measured with SSD systems when communication is good.

  Based upon the above discussion, it is expected that stand-alone BWD systems will be much more subject than SSD systems to being overwhelmed by the basement depressurizations created by appliances.

c) Mitigation system design variables

- ***Method of distributing suction to walls*** (individual-pipe vs. baseboard-duct approach). Insufficient data are available to permit a meaningful comparison of the relative performance of these two approaches. Most published data address the individual-pipe approach. In no

cases have both approaches been tested back-to-back in a single house, to compare performance.

- ***Number of suction pipes.*** In all six of the Pennsylvania houses where the individual-pipe BWD approach has been tested as a stand-alone measure, one or more BWD pipes were installed in each perimeter foundation wall and in each interior load-bearing block wall that penetrated the slab. Where there was a discontinuity in a wall, dividing the wall into two sections, a pipe was installed in each section. As indicated previously, this complete coverage of the walls was adequate to reduce the three most amenable houses below 2 to 4 pCi/L in the basement during the winter, but was inadequate to reduce the less amenable houses below 4 pCi/L in the basement. No testing was conducted to reduce the number of pipes in the amenable houses, to determine whether fewer pipes would have been sufficient in those cases. Qualitative (smoke tracer) measurements suggested that suction on one perimeter wall would sometimes extend around the corner into the adjoining perimeter wall, but would not consistently do so.

  The one house in New Jersey having a stand-alone individual-pipe BWD system (Tu89) achieved substantial reduction (from 146 to 3 pCi/L in the basement) with two BWD pipes in only one of the basement walls (the stem wall beside the adjoining slab on grade).

  Of the two amenable houses in New York having stand-alone BWD systems (Ni89), reductions to about 2 pCi/L in the basement were achieved with BWD pipes in only one to three of the perimeter walls. The one less amenable house (OP-01) appears to have been significantly reduced with three suction pipes in one wall, although there are not cold-weather data with only the BWD system operating to confirm this favorable result.

  In summary, with stand-alone individual-pipe BWD systems, there are some limited data (from New Jersey and New York) suggesting that installation of a suction pipe into each wall is not always necessary, especially when the house is amenable to BWD. This result is consistent with isolated experiences of commercial mitigators. This situation will occasionally occur when one or two walls are the predominant entry routes, perhaps due to a high source strength near those walls. However, there are other limited data (from Pennsylvania) suggesting that, when a house is not amenable to BWD, one pipe in each wall will not be sufficient. Given the limitations of the data, if a stand-alone individual-pipe BWD system is being considered for a given house, it would appear logical during the planning process to anticipate that one pipe will be required on each perimeter and interior load-bearing wall, unless or until evidence becomes available indicating that fewer pipes will be sufficient.

  No data are available from stand-alone baseboard-duct BWD systems, indicating whether it will sometimes be sufficient to install baseboard ducts on only some of the walls, or along only a portion of a wall. Presumably, the baseboard-duct approach would be at least comparable to the individual-pipe approach, in terms of its ability to be successful when fewer than all four walls are directly treated.

- ***Location of suction pipes.*** No definitive data are available regarding the optimum point at which to insert an individual BWD suction pipe into a block wall. Commonly, pipes have been installed roughly midway between the two ends of the wall, although obstructions have often required that the pipes be installed off this mid-point. Where multiple pipes have been installed in a single wall, the pipes have been installed at roughly equal distances from the two ends of the wall and from each other. In the Pennsylvania houses (Sc88), BWD pipes were generally installed near the bottom of the wall, in an effort to improve the treatment of the wall/floor joint and the footing region, and to improve extension of the suction field under the slab.

- ***Size of suction pipes.*** Where BWD has been used as a stand-alone technique, flows have been high, due to the leakiness of the walls. Under these conditions, piping of at least 4 in. diameter has essentially always been used, to reduce pressure losses in the piping. In some cases in Pennsylvania, to further reduce pressure losses, the 4-in. diameter legs into the walls were connected to a 6-in. diameter trunk line leading to the exhaust fan. Since exhaust flows with the 90-watt centrifugal fans were sometimes as great as 150 to 200 cfm with these systems, piping pressure losses were sometimes as great as 0.25 in. WG. But in none of the Pennsylvania cases did pressure losses between the fan and the wall entry points appear to be a primary cause of poor system performance.

  Where a BWD component has been tapped into a SSD system, and the combined piping directed to a single fan, it has commonly been necessary to restrict flow into the BWD piping. Otherwise, system suction can be reduced to such an extent that performance of the SSD component deteriorates, offsetting any benefits adding of the BWD component. This restriction of BWD flow can be accomplished by using 4-in. pipe for both the SSD and the BWD piping, and by installing dampers or valves in the BWD legs to allow the flow from those pipes to be reduced. Perhaps more commonly, this restriction has instead been achieved by reducing the BWD legs to 1 or 2 in. in diameter.

  As discussed previously, tapping 2-in. BWD suction pipes into 4-in. diameter SSD pipes in two houses in Pennsylvania (Houses 7 and 20 in Sc88) resulted in comparable drops in the suctions in the SSD pipes in both houses (from about 0.9 to about 0.1-0.2 in. WG). However, the impacts on basement radon concentrations were different in the two houses. In House 20, the BWD component improved performance, whereas in House 7, performance degraded, despite effective depressurization of the block walls. Apparently because of the specific characteristics of House 7, a pipe diameter even smaller than 2 in. would be warranted, if a BWD component is to be helpful at all.

US EPA ARCHIVE DOCUMENT

Commercial mitigators also report using 1- to 2-in. diameter BWD suction pipes, when adding BWD components to SSD systems (Mes90b, Kl92). Some mitigators also use dampered or valved 4-in. pipe for the BWD legs, although other mitigators express concern regarding possibly inadequate reliability of the dampers and high costs of the valves. The successful SSD + BWD installations that have been reported using 4-in. pipe for the BWD legs without dampers or valves, have been cases where the BWD component consisted of one or two pipes treating only the stem wall between a basement and an adjoining slab on grade (Ni89, Tu89).

- ***Degree of wall sealing.*** Best performance with stand-alone BWD systems has consistently been achieved in houses where the block wall had a top course of solid cap blocks, or where the open voids in the top course were accessible for effective closure. However, the actual effect of closing the top voids has not been well quantified; in almost all cases, the closure was completed before system performance measurements were made. In only one case have results been reported with and without the top voids closed (House OP-16 in Ni89). In that house, pre-mitigation concentrations in the basement (about 55 pCi/L) fell only to 23 pCi/L when a stand-alone individual-pipe BWD system was activated without closing the top voids (according to a 1-week continuous measurement made in March). Closure of the top voids reduced basement levels to 2.3 pCi/L, based upon a 5-day continuous measurement the following July. The difference in weather between the two measurements, as well as the closure of the top voids, could have contributed to the much lower reading obtained after closure.

  The effects of other types of wall closure on BWD performance have not been well defined. In one Tennessee house where a basement SSD system was being supplemented by BWD on a block wall on the interior of a stone foundation wall (House DW43 in Py90), coating the porous face of the block wall with a surface bonding cement reduced basement radon levels from about 18 pCi/L to 4-5 pCi/L with the system operating. Such coating of the block surface is usually necessary only when the block is unusually porous.

d) Mitigation system operating variables

- ***Fan capacity.*** Most of the testing of BWD systems, and of SSD+BWD systems, appears to have been conducted using the 90-watt, 270-cfm centrifugal in-line tubular fans at full power. In view of the generally high flows expected from BWD systems, use of smaller fans would not appear to be advisable. No data have been reported quantifying the effect of fan capacity on BWD performance.

- ***Fan in suction vs. pressure.*** Block-wall systems with the fans operating to pressurize the wall cavities, are discussed in Section 2.4.

e) Geology/climate variables

- ***Source strength.*** High source strength could be contributing to some of the apparent effects of other variables discussed earlier for stand-alone BWD systems. Both of the Pennsylvania houses which offered difficulties in wall closure and which were not consistently reduced below 4 pCi/L in the basement (Houses 7 and 16) also likely had the highest source strengths of any of the houses tested with stand-alone BWD systems. As an indicator that the source strengths were likely high, the pre-mitigation radon concentrations in these basements were 402 and 395 pCi/L, respectively, the highest among the tested houses. Thus, source strength, as well as difficulties in wall closure, could have been contributing to the lesser success in these two houses.

  On the other hand, the one house in New York (OP-01) where BWD successfully reduced levels below 4 pCi/L despite the fact that suction was drawn on only one uncapped wall, also had one of the lowest source strengths. Cold-weather pre-mitigation radon levels in the basement were 21 pCi/L. The relatively lower source strength could have facilitated the apparent success of BWD in this house.

  Intuitively consistent with the above results is the fact that both of the houses which were reduced below 2 pCi/L with stand-alone BWD systems (House 14 in Pennsylvania, House AR-01 in New York) appeared to have relatively low source strengths (with pre-mitigation basement concentrations of 36 and 17 pCi/L), combined with the ability to effectively close the top voids. The remaining houses which were reduced below 4 pCi/L, but not below 2 pCi/L, all had higher pre-mitigation levels (55 to 350 pCi/L).

  However, it is noted that even houses which apparently have relatively high source strengths (with pre-mitigation basement concentrations of 150 to 350 pCi/L) have been reduced below 4 pCi/L with stand-alone BWD systems, where the house was amenable. And conversely, in one house where the source strength appeared relatively lower (House 19 in Pennsylvania, with a pre-mitigation basement level of 32 pCi/L), BWD was unsuccessful. Thus, the source strength (or the pre-mitigation indoor concentration, as a surrogate for source strength) does not, by itself, suggest whether a stand-alone BWD system might be successful.

  A high source strength could be an important factor in determining whether a BWD component needs to be added to a SSD system. Failure of a stand-alone SSD system to fully treat a block wall will be more serious when the remaining soil gas which continues to enter the wall has extremely elevated radon concentrations.

- ***Permeability of underlying soil.*** There are no data relating the performance of BWD systems (or the need to add a BWD component to a SSD system) to soil permeability. However, it might be anticipated that poor soil permeability could increase the likelihood that a BWD

US EPA ARCHIVE DOCUMENT

component might be needed on a SSD system, since this could reduce the ability of the SSD system to treat the exterior face of the block wall, or to intercept the soil gas before it reaches the foundation.

- ***Climatic conditions.*** Because of the relatively low depressurizations created inside the wall cavities and beneath the slab by stand-alone BWD systems, it would be expected that BWD will be much more subject than SSD to being overwhelmed by weather-induced depressurizations of the basement. The thermally induced depressurization of the basement during cold weather would be about 0.015 in. WG in a two-story house (Sau89). By comparison, the sub-slab depressurizations maintained by stand-alone BWD systems have been measured ranging from 0.001 to 0.012 in. WG in houses having moderate to good sub-slab communication (Fi91). Depressurizations inside the walls have not been reported, but they are likely well below the suctions of 0.01 to 0.15 in. WG measured in BWD pipes near the point where they penetrate into the wall.

f) Mitigation system durability

- ***Radon reduction performance.*** Of the 38 EPA mitigation installations in eastern Pennsylvania which have been monitored since 1985-87 (Fi91), five have been stand-alone BWD systems. Winter-quarter alpha-track measurements in those houses over the 3 years following installation have remained very steady in all five houses. Only in one house (House 19) did any one winter's reading vary from the three-winter average by more than ± 0.5 pCi/L. And even in House 19, where depressurization of the basement by basement air leakage into the BWD system apparently was increasing radon entry through slab cracks, basement concentrations remained remarkably steady over the years (31.3 ± 2.5 pCi/L).

- ***System suctions and flows.*** System suctions and flows remained steady over the 3 years since installation, in the five stand-alone BWD installations that have been monitored in Pennsylvania (Fi91).

- ***Equipment durability.*** There have been no fan failures among the five stand-alone BWD installations under the Pennsylvania project. Two of these five fans are the standard 90-watt centrifugal tubular units; the remaining three are 90-watt wall-mounted centrifugal units having comparable fan curves.

- ***Homeowner intervention.*** Two of the five BWD fans in Pennsylvania are known to have been turned off at one time or another over the 3 years following installation. In one case, the fan became unplugged accidentally; in the second, the owner turned the fan off during the summer when windows were commonly opened. This experience is consistent with that for other ASD techniques.

2.3.5 Active Sub-Membrane Depressurization

Active SMD has consistently proven to be the most effective approach for treating crawl-space houses. Radon reductions in the living area of the house have commonly been reduced by 80 to 98% by SMD in EPA study houses. Lesser reductions have been observed in some cases, where pre-mitigation levels were low, where there was an untreated adjoining wing, or where a combination of factors prevented adequate distribution of suction beneath the membrane (large crawl space, very poor soil permeability, inadequate number of suction pipes through the membrane, or inadequate sealing of the membrane). In houses where a basement or a slab-on-grade living wing adjoins the crawl space, a SSD or DTD system treating the adjoining wing is often advisable, in addition to (or perhaps instead of) the SMD component in the crawl space.

SMD has occasionally been tested back-to-back against other crawl-space treatment techniques: natural crawl-space ventilation (i.e., opening foundation vents); forced (fan-assisted) crawl-space ventilation with the fan mounted to blow crawl-space air outdoors (in an effort to achieve crawl-space depressurization); and forced ventilation with the fan blowing outdoor air into the crawl space (in an effort to achieve crawl-space pressurization). SMD has always provided distinctly better reductions than have the other approaches (Fi90, Py90, Py91, He92). The technique which has generally proven second in effectiveness, after SMD, has been crawl-space depressurization. There is undoubtedly a crawl-space ventilation/ depressurization component to SMD systems, as well, since crawl-space air leaks into the SMD system through openings in the membrane and is exhausted. However, concentrating the ventilation/depressurization in the region beneath the membrane appears to more effectively intercept the radon and prevent its entry into the living area.

Based on EPA's mitigator survey (Ho91), commercial mitigators report using SMD over one-third of the time in crawl-space houses. According to this survey, about one-third of the crawl-space houses are treated using natural crawl-space ventilation or forced ventilation (crawl-space pressurization or depressurization), and the remaining third are treated using barriers or sealing. From discussions with mitigators in regions where crawl-space houses are relatively common (Sh91, An92, How92, Kl92), SMD is the technique of choice in houses having an accessible crawl space with no adjoining wing. Where there is an adjoining basement or slab-on-grade wing which is being treated using SSD or DTD, the crawl space wing may be treated using one of the ventilation approaches or sealing rather than SMD, although sometimes a SMD component is added to supplement the SSD system. Where the crawl space is inaccessible for installation of a SMD system, a crawl-space ventilation approach is usually employed (Tu91c, He92, Kl92).

EPA has obtained results from testing SMD systems in 10 crawl-space houses not having adjoining wings (Ni89, Os89b, Fi90, Py90, Du91). Pre-mitigation concentrations in the living area typically ranged from 3 to 33 pCi/L, although one house had a level of 160 pCi/L. Nine of these houses were reduced

US EPA ARCHIVE DOCUMENT

below 4 pCi/L, and six were reduced below 2 pCi/L. The house having the pre-mitigation level of 160 pCi/L was among those reduced below 2 pCi/L, although the SMD system had to be supplemented with a BWD component and a well water treatment system to achieve this reduction (Ni89). The apparent performance in this latter house may be exaggerated, since post-mitigation measurements made in April are being compared against pre-mitigation measurements made the preceding October through December. The one house not reduced below 4 pCi/L had an unusually shaped crawl space (100 ft long and 23 ft wide), and was reduced from 33 to 5 pCi/L in the living area (Py90). In an effort to treat this long house with highly impermeable soil, porous matting was placed beneath portions of the membrane to aid in extension of the suction field, two suction pipes penetrated the membrane, and the membrane was sealed everywhere (Py90).

All of the houses except one had radon reductions of 80% or greater in the living area. The house having a lesser percentage reduction (63%) experienced this relatively low percentage because of low pre-mitigation concentrations, 7 pCi/L (Py90). A second house with low pre-mitigation levels (3 pCi/L) might also have had living-area reductions below 80%, but this is uncertain because post-mitigation levels in the living area were not reported (Os89b).

The installations in the 10 houses above vary in their designs. In some cases, more than one suction pipe penetrated the membrane. In some cases, the SMD suction pipe was drawing suction on a length or a loop of perforated piping placed under the membrane. In some cases, the membrane was sealed everywhere (at seams between sheets, around the crawl-space perimeter, around interior piers); in other cases, it was sealed only in some locations, or nowhere. In a few cases, the membrane did not cover the entire crawl-space floor. In two cases, porous matting was placed beneath at least a portion of the membrane to improve suction field distribution. In a number of these cases, the system performance might have been improved by taking additional steps, such as increasing the number of suction pipes or increasing the membrane sealing effort. Such additional steps might have increased the number of the houses reduced below 2 pCi/L.

The pre- and post-mitigation measurements reported for the 10 houses represent a range of measurement methods and durations, ranging from several-day measurements with continuous monitors or charcoal detectors, to 3- to 12-month alpha-track detector measurements. Thus, some of these measurements better represent the long-term performance of these SMD systems than do others. However, it is clear that, overall, the SMD systems are being very effective.

In addition to the results from the 10 "pure" crawl-space houses (having no adjoining wings), EPA has also obtained results from SMD systems in 14 houses where a basement or slab-on-grade living wing adjoined the crawl space (Sc88, Gi90, Mes90a, Py90, Du91). In 11 of the 14 houses, a basement adjoined the crawl space; in all of these houses, the SMD system was supplemented with a SSD or DTD system in the basement. In the three houses where a slab on grade adjoined the crawl space, the slab-on-grade wing was not directly treated.

In all 11 houses where an adjoining basement was also being treated, the combined SSD/DTD + SMD system achieved radon reductions greater than 90%. All of the houses were reduced below 4 pCi/L, and 9 of the 11 were reduced below 2 pCi/L in the basement.

Among the three houses with an untreated adjoining slab-on-grade living wing (Py90), two were reduced below 4 pCi/L, and none were reduced below 2 pCi/L in the living area above the crawl space. Both houses reduced below 4 pCi/L experienced radon reductions of 80% or greater. The one having the best results (92% reduction, to a post-mitigation level of 2.2 pCi/L) had no membrane at all, but was being treated by four suction pipes buried in bare soil (i.e., what is referred to in this document as site depressurization). The one house not reduced below 4 pCi/L achieved only moderate reductions (from 28 to 15 pCi/L, a reduction of 46%). It is not clear why the SMD system in this last house performed so poorly. Perhaps the slab on grade was an important radon source, although it was relatively small (a 300 ft^2 converted garage) compared to the crawl space (900 ft^2).

The experience of commercial mitigators with SMD systems has been more limited than with SSD and DTD systems. Houses having a crawl-space substructure represent a relatively limited percentage of the housing stock (about 14% of the total new housing starts in the U.S. between 1976 and 1983, according to the National Association of Home Builders). Moreover, crawl-space houses may be less prone to having elevated radon levels in the living area. Mitigators working in regions having a relatively high percentage of crawl-space houses report that properly designed SMD systems are consistently very effective, commonly reducing indoor radon levels below 2 pCi/L (Sh91, An92, How92, Kl92).

The following discussion summarizes the results to date for each of the variables that can influence system design, operation, and performance.

a) House design variables

- ***Nature of crawl-space floor.*** Many crawl spaces have floors comprised of bare native soil. In some cases, this soil floor is covered with a layer of gravel, and/or with a plastic vapor barrier. Crawl spaces having a concrete slab as a floor, or an integral unfinished concrete "wash" floor, are usually considered for treatment using SSD, and are thus not considered in this discussion of SMD.

  Where the crawl-space floor is bare soil, the permeability in the native soil is often poor. Despite this, good performance of SMD systems has generally been achieved without special provisions to extend the suction field, unless the crawl space has been larger than about 1,500 ft^2. In those cases where permeability was poor and the crawl space was large, performance has been improved through the use of perforated piping under the membrane (Fi90, Du91, An92, Kl92), multiple individual suction pipes (Py90), or sub-membrane matting (Py90). As discussed later, the effects of one vs. two suction pipes in such cases have been defined (Py90). Unfortunately, the systems have not been tested with and without perforated

US EPA ARCHIVE DOCUMENT

US EPA ARCHIVE DOCUMENT

piping, or with and without matting, so that the exact effects of those design selections are not clear.

In one house in Tennessee where the permeability of the floor soil seemed relatively good from visual appearance (House DW31 in Py90), a reduction of 92% was achieved in the living area (to 2.2 pCi/L) with no membrane at all (i.e., site depressurization). In that case, four suction pipes were installed, drawing suction on covered pits in the four quadrants of the crawl space. Testing of a simpler site depressurization system in four crawl-space houses in Ohio (Fi90), where the clay soil was impermeable, and where the system consisted of a single pipe embedded about 10 ft deep into the soil outside the crawl space, gave no measurable indoor reductions. Site depressurization would be expected to work best in cases where a suction could be drawn on a relatively permeable soil layer capped by a relatively impermeable layer. House DW31 in Tennessee is the only house where the site depressurization approach has been successfully demonstrated to date in the U.S.

Where the crawl-space floor is covered with gravel, it would be expected that the gravel would facilitate the distribution of suction beneath the membrane with a single suction pipe, analogous to the effect of gravel beneath a basement slab. Gravel could also increase flows beneath the membrane, facilitating the leakage of crawl-space air into the system via any unsealed seams in the membrane. This increased air flow may or may not make complete sealing of the membrane more important when gravel is present. Gravel was present on the floors of 5 of the 24 EPA study houses discussed previously (Fi90, Mes90a). The crawl spaces with gravel in Fi90 were relatively large, one as big as 2,700 ft^2; however, the SMD systems all used sub-membrane perforated piping, so that any role of the gravel in enabling a single pipe to treat such large houses was not determined. The crawl spaces with gravel in Mes90a were small (300 ft^2) wings adjoining basements; such small wings would be expected to be effectively treated whether there were gravel or not, and, in addition, the effects of the basement treatment masked any role of the gravel. The crawl spaces in a given project having gravel floors did not produce higher flows or lower suctions in the SMD piping than did those in the same project having floors of bare soil.

In summary, it would be expected that gravel could improve SMD performance, by improving suction field extension. However, the available data are not sufficient to permit determination of the effect of gravel floors.

In many cases, a pre-existing vapor barrier will already be down on some portion of the crawl-space floor. Such pre-existing barriers may not be sufficiently complete, or sufficiently neatly deployed, to serve as the membrane for a SMD system. However, such existing sheeting has commonly been incorporated into the membrane for the system, with the pre-existing plastic being straightened out and overlapped, and with new plastic being put down over areas not already covered. Where the pre-existing plastic is in good condition, it does not generally appear that SMD performance is degraded by making use of the existing plastic (Fi90).

Most of the crawl-space houses tested in the EPA projects have had relatively flat, even floors, which facilitated placement of the membrane sheets over the floor. More irregular floors, such as those with rock outcroppings, could impact the ability to cover the entire floor, or could require sub-membrane matting (or a thicker membrane) to reduce the risk of membrane punctures due to traffic in the crawl space. Typically, with flat floors, 6- to 10-mil thick polyethylene membranes (or thinner cross-laminated membranes of equivalent thickness), without matting, have been used both in the EPA projects and commercially. More expensive 15- to 20-mil polyethylene has been used in two of the EPA projects where floors were flat but heavy traffic was expected (Os89b, Gi90); reinforced resin industrial pit liner material has been used in one study where extremely rugged floors were encountered in northern Alabama (Ma88). In one house in New York having rock outcroppings in the crawl space (House OP-05 in Ni89), matting was placed beneath the membrane where it covered the rocks, apparently in part to improve sub-membrane communication as well as to provide puncture resistance.

- ***Crawl space accessibility.*** In some cases, inaccessible portions of the crawl space can apparently be left uncovered by the membrane without serious degradation in SMD performance.

  In one house in Ohio where the central portion of the crawl space was inaccessible due a forced-air air conditioning unit, no attempt was made to cover the central crawl space (House 24 in Fi90). (Pre-existing vapor barrier material was present in the central portion of this slab, but it did not cover the floor completely.) New membrane for the SMD system was extended out from the perimeter wall for the width of one sheet (about 8 ft), around the entire perimeter. Suction was drawn on a loop of perforated piping placed around the perimeter, beneath the membrane. Living area concentrations were reduced from 16 to below 2 pCi/L with this system. Because the perforated piping was immediately beside the perimeter wall, it was felt necessary to carefully seal the perimeter of the membrane to the wall, to reduce crawl-space air leakage into the system. The results from this house show that complete coverage of the floor is not always necessary. However, in this case, the cost saving achieved by avoiding coverage of the central area was partially offset by the cost involved in sealing the membrane to the perimeter wall, a step which might have been less necessary had the suction been drawn toward the central portion of the slab.

  In some cases, the crawl space is largely or completely inaccessible. For example, some crawl spaces have only about a foot of headroom throughout ("suspended floors"). In such cases, SMD is not an option. Forced exhaust ventilation of the crawl space (crawl-space depressurization) will commonly be preferred in such cases; however,

if backdrafting of combustion appliances is a concern, crawl-space pressurization may be preferred (Tu91c).

- ***Nature of foundation wall.*** There are insufficient data on SMD systems to enable an assessment of the effect of block vs. poured concrete foundation walls. All but three of EPA's 24 crawl-space study houses had block foundations; the three having poured foundations did not achieve better reductions than did those having block foundations. Since all but 2 of the 24 houses were reduced below 4 pCi/L, and since 15 were reduced below 2 pCi/L, it would appear that to the extent that the blocks may have been contributing to radon entry, the SMD system was largely addressing that entry route.

  Some mitigators take steps to help ensure that a SMD system will treat the block wall (Sh91, An92, Kl92). Steps include, for example, extending the membrane up the entire interior face of the wall inside the crawl space (Sh91), or drilling holes through the interior block face beneath the level at which the membrane is attached (Kl92). There are no data defining the effectiveness of these steps.

- ***House size.*** In summary, the data are too limited, given the number of variables being varied, to make a definitive statement regarding the effect of house size on SMD performance. However, it would appear that where perforated piping is placed beneath the membrane, or perhaps if gravel is present on the crawl-space floor, the size of the crawl space is not critical. With perforated piping and/or gravel, crawl spaces as large as 2,700 ft2 have consistently been reduced below 2 pCi/L.

  But where perforated piping is not placed beneath the membrane, and where there is no gravel on the floor, SMD performance seems consistently to be reduced. Levels still often appear to be reduced below 4 pCi/L under these conditions, even with crawl-space floor areas as large as 1,500 to 2,000 ft^2. However, without sub-membrane perforated piping or gravel, there is an increased likelihood that multiple suction pipes through the membrane will be required; and/or living-area concentrations will be less effectively reduced (or may even remain elevated).

  Accordingly, with crawl spaces of 1,500 to 2,000 ft^2 where no gravel is present, and, in some cases, in even smaller crawl spaces, serious consideration should be given to installing perforated piping beneath the membrane, especially if it is desired to reduce living-area concentrations to 2 pCi/L and less. Some mitigators have reported often achieving levels below 2 pCi/L with SMD systems having one individual suction pipe and no sub-membrane perforated piping (Sh91, How92). However, the data from EPA's relatively limited number of study houses suggests that living-area levels below 2 pCi/L may not be reliably achieved, even in relatively small crawl spaces, unless perforated piping or gravel are present.

  One EPA study house having a crawl-space floor area of 2,700 ft^2 was reduced from 17 pCi/L to below 1-2 pCi/L in the living area with a SMD system and no adjoining basement wing (House 22 in Fi90). The good performance in that particular house may be due in part to the fact that there was gravel over the floor, and a perimeter loop of perforated piping was installed, facilitating distribution of the suction field beneath the membrane. In a second house, having a crawl space of 2,050 ft^2 (House 28 in Fi90), living area levels were also brought below 1-2 pCi/L even though there was no gravel to aid in suction field distribution. But again, two parallel lengths of perforated piping were installed beneath the membrane; in addition, the membrane was sealed everywhere, and the pre-mitigation levels were only slightly elevated (5 pCi/L).

  All of the other 13 crawl-space study houses that were reduced below 2 pCi/L in the living area were smaller (with crawl-space floor areas ranging between 300 and 1,300 ft^2). Each of these other houses also had one or more other factors working in their favor: low pre-mitigation concentrations (as low as 3 to 5 pCi/L in several cases); an adjoining basement wing that was also being treated with SSD or DTD (responsible for most of the measured radon reductions); sub-membrane perforated piping; gravel on the floor; or, in one case, simultaneous BWD and well water treatment supplementing the SMD system.

  Among the 15 EPA study houses that were reduced to 2 pCi/L and less (out of the 24 houses total), only three houses were reduced below 2 pCi/L in the living area by SMD alone (without SSD in an adjoining basement) which did not have sub-membrane perforated piping to help distribute the suction field in the crawl space. One of the three houses had a 300 ft^2 crawl space and an adjoining basement, but obtained levels below 2 pCi/L when only the SMD leg of the mitigation system was operating (House 582 in Mes90a). The second house had a 930 ft^2 crawl space (Os89b). The third house (House OP-05 in Ni89) had a 1,500 ft^2 crawl space (Br92). Each of these houses had other circumstances that may have aided in achieving the low levels. The house with the 300 ft^2 crawl space, in addition to having only a small crawl space wing, had a gravel floor and a low pre-mitigation radon concentration (4.3 pCi/L). The second house had low pre-mitigation levels in the living area to begin with (3 pCi/L, based on grab samples), and did not have good post-mitigation measurements in the living area. The third house, House OP-05, included fibrous matting under portions of the membrane over bedrock outcroppings, to aid in suction field extension. Moreover, this house required BWD and water treatment components to be reduced below 2 pCi/L, and the low post-mitigation measurement was made during mild weather (April).

  The nine EPA study houses not reduced to 2 pCi/L or less had neither perforated piping nor gravel beneath the membrane. Seven of these nine houses were reduced to living-area concentrations below 4 pCi/L, though not below 2 pCi/L; these seven houses had crawl-space floor areas ranging from 300 to 2,000 ft^2. Only one of these seven houses had a crawl-space floor area greater than

US EPA ARCHIVE DOCUMENT

1,500 ft² (House DW29 in Py90, with a floor area of 2,000 ft² and a pre-mitigation level of 16 pCi/L). In this house, a one-pipe system achieved only 7 pCi/L in the living area, and a second pipe had to be installed to reduce living-area levels to 3 pCi/L.

Of the two EPA study houses not reduced below 4 pCi/L by SMD, one (House DW27 in Py90) had an unusually elongated floor plan, with a crawl-space floor area of 2,300 ft², which likely contributed to its poor performance. Even a second individual suction pipe through the membrane could not reduce levels below 5 pCi/L. The other house (DW60 in Py90) had a crawl-space floor area of only 900 ft², but had an untreated adjoining slab-on-grade wing. Again, neither had sub-membrane perforated piping or gravel on the floor.

- *Adjoining wings.* Where the EPA study houses have had basement wings adjoining the crawl spaces, treatment of the basement (using SSD or DTD) has commonly supplemented the crawl-space SMD system. In most cases, the relative contributions of the SSD/DTD component and the SMD component have not been isolated, so that it cannot be determined how necessary the SMD component was (or how necessary the SSD/DTD component was).

In three basement-plus-crawl-space houses in Maryland where the individual contributions of the two components were separated out (Mes90a), the two components together always achieved lower indoor radon levels than did either component alone. But in two of the three houses, basement treatment alone was sufficient to reduce levels below 1-2 pCi/L, and the SMD component had only a minor incremental effect. The one house where the SMD component was important (House 1357) was the only house where basement sub-slab communication was poor, and where the crawl-space appeared to be an important radon source based upon soil radon concentrations. In that house, basement concentrations were reduced from 11 to 3 pCi/L with SMD treatment only, whereas basement SSD by itself (with a one-pipe SSD system) reduced levels only to 6 pCi/L. The two components together reduced the basement to 1.2 pCi/L. The success of the basement-only treatment in the other two houses could be due in part to the low pre-mitigation concentrations in these other houses (4.2-4.8 pCi/L).

The three EPA study houses which had slab-on-grade living areas adjoining the crawl spaces were all treated with SMD only, with no attempt to apply SSD to the adjoining slab (Py90). In two of these houses, treatment of the crawl space alone was sufficient to reduce living-area concentrations from 16-26 pCi/L, down to 2-3 pCi/L. These two houses include one (DW31) where the slab-on-grade wing was almost as large as the crawl space, and where the SMD system included four suction pipes and no membrane (i.e., site depressurization). However, the third house with an adjoining slab on grade was reduced only from 28 to 15 pCi/L, despite the fact that the crawl space was relatively small (900 ft²) and the adjoining slab was significantly smaller (a converted garage having only 300 ft²).

Of the 15 EPA crawl-space study houses reduced below 2 pCi/L, 9 had adjoining basement wings which were being treated with SSD or DTD, supplementing the crawl-space SMD system. Stated another way, out of the 11 study houses having an adjoining basement wing being treated by SSD or DTD, only 2 were not reduced below 2 pCi/L.

While not definitive, the above data, taken overall, seem to be clearly suggesting that any wing adjoining the crawl space should normally be treated in addition to (or instead of) SMD in the crawl space. The relative importance of treating the adjoining wing vs. the crawl space may vary from house to house. However, in most cases, SSD or DTD in the adjoining wing will probably be important; and, in many cases, it will likely be more important than SMD in the crawl space.

b) House operating variables

- ***Operation of central furnace fan.*** Investigators who have measured sub-membrane depressurizations in SMD systems not having perforated piping or gravel beneath the membrane, consistently report that depressurizations drop below 0.01 in. WG within 6 to 10 ft of the suction pipe (Os89b, Py90), and below 0.001 in. WG within 10 to 15 ft (Py90).

Where a central forced-air furnace is present in the crawl space, operation of the furnace fan can be expected to have several complex effects. One effect will be that the leaky cold-air return ducts will create some depressurization of the crawl space, mitigated to some extent by the general leakiness of crawl spaces. This depressurization would work against the sub-membrane depressurization created by the SMD system, tending to draw sub-membrane gases up into the crawl space through leaks in the membrane. A second effect will be that the radon-containing crawl-space air that is sucked into the return ducting will be distributed throughout the house, dramatically increasing the interzonal transfer of air between the crawl space and the living area.

The question is whether the furnace fan will depressurize the crawl space sufficiently to overwhelm the sub-membrane depressurization, drawing more soil gas into the crawl space and then helping to distribute it throughout the house. Based upon the data from Os89b and Py90 above, a crawl-space depressurization as low as 0.001 in. WG could nominally be sufficient to overwhelm the system.

Limited data have been reported for two Alabama houses regarding the effects of a central furnace fan in the crawl space on crawl-space pressures (Houses HU11 and HU12 in Ma89b). In HU12, central fan operating decreased the pressure in the crawl space (relative to outdoors) by less than 0.001 in. WG. Nominally, this increase in crawl-space depressurization could help to overwhelm sub-membrane depressurization at points remote from the

US EPA ARCHIVE DOCUMENT

SMD suction pipes. But in House HU11, operation of the central fan appeared to *increase* the crawl space pressure (by somewhat more than 0.001 in. WG) relative to outdoors. If this measurement is correct, the central fan would be aiding the SMD system, increasing the effective sub-membrane depressurization relative to the crawl space. These reported central fan effects are somewhat in question. The pressure effects are small (often below the sensitivity of the measurement device); and the numbers are the average of several measurements made over the course of a day, so that temporal variations could have influenced the results.

The measurements of crawl-space pressures in Ma89b were not accompanied by measurements of crawl-space radon concentrations or of SMD system performance. Thus, it is unknown whether the measured pressure effects would have in fact overwhelmed a SMD system, or have increased indoor radon levels.

The effects of the central furnace fan on interzonal air transfer between the crawl space and the living area have been reported on these same two houses (Ma89b). These data, based upon freon tracer testing, confirm that interzonal flows can increase significantly (e.g., from about 50 to about 200 cfm in HU11). Thus, to the extent that a central fan in the crawl space did increase crawl-space radon levels, the forced-air system would serve to distribute the radon through the house.

c) Mitigation system design variables

- ***Method of distributing suction beneath membrane.*** Two primary approaches are considered for distributing suction: 1) drawing suction on perforated piping beneath the membrane (analogous to DTD); and 2) installing one or more individual suction pipes through the membrane at various points, with no sub-membrane perforated piping (analogous to SSD). No data exist comparing a SMD system in a single house with and without perforated piping beneath the membrane.

In summary, as discussed previously under the section on *House size*, the data are not fully definitive, given the number of variables that were being varied. However, the trend clearly suggests that perforated piping may be important in a crawl space of any size if the living area is to be reduced to 2 pCi/L or less. And, especially if the crawl-space floor area is larger than 1,500 to 2,000 ft^2, perforated piping may be important to ensure levels below 4 pCi/L, at least without multiple suction pipes.

All nine of EPA's SMD installations using sub-membrane perforated piping were reduced below 2 pCi/L, regardless of floor area (up to 2,700 ft^2). Only 3 of the 12 stand-alone SMD systems without perforated piping reduced the living area below 2 pCi/L, and all of these had special circumstances which aided the achievement of this low level. Of the two houses larger than 1,500 ft^2 not having sub-membrane perforated piping, one required two suction pipes to be reduced below 4 pCi/L, and the other remained above 4 pCi/L despite the use of two suction pipes.

In addition to the results on these EPA-sponsored installations, commercial mitigators report routinely using sub-membrane perforated piping whenever levels below 2 pCi/L are desired and/or when the crawl space is sufficiently large (An92, How92, Kl92).

All nine of the EPA study houses which have used sub-membrane piping have been reduced to 2 pCi/L and less in the living area (Sc88, Fi90, Gi90, Du91). The pre-mitigation concentrations in these houses were typically 15-30 pCi/L, but were 40-60 pCi/L in two cases. These reductions were achieved despite relatively large crawl spaces (most ranging from 1,000 to 2,700 ft^2, except in three houses where the crawl-space was a 200 to 600 ft^2 wing adjoining a basement). In three of the four "pure" crawl-space houses in Ohio (Fi90), this good performance might have been aided by the presence of gravel on the crawl-space floor. In the two Alabama houses (Du91), the two Maryland houses (Gi90), and the one Pennsylvania house (Sc88), which had basements adjoining the crawl spaces, simultaneous SSD or DTD in the basement wing was undoubtedly contributing significantly to the high reductions achieved by the SSD + SMD (or DTD + SMD) systems.

Among the nine essentially "pure" crawl-space houses where no perforated piping was installed beneath the membrane (Ni89, Os89b, Py90), in only two cases were concentrations in the living area reduced below 2 pCi/L (although levels were reduced below 4 pCi/L in all but two of the houses, as discussed in the section on House size). Among the two houses where concentrations were reduced below 2 pCi/L, one had a very low pre-mitigation level of 3 pCi/L (Os89b); the second required a BWD and a water treatment component, in addition to a three-pipe SMD system, to achieve this level in mild weather (Ni89).

Six of EPA's crawl-space study houses had adjoining basements being treated by SSD or DTD, with no perforated piping beneath the membrane in the SMD component (Mes90a, Py90). Of these six, four were reduced below 2 pCi/L without the perforated piping (Mes90a). However, the crawl-space wings in these four combined-substructure houses were relatively small (300 to 600 ft^2), and the basement SSD or DTD component of the mitigation system was playing the major role in achieving the high reductions. In only one of these houses (House 582) was the SMD component adequate by itself to reduce basement concentrations below 2 pCi/L; and this house had the benefit of a low pre-mitigation level (less than 5 pCi/L in the basement) and gravel on the crawl-space floor to aid in extending the suction field.

The other two houses with adjoining basements and without sub-membrane perforated piping on the SMD leg of the system (Houses DW14 and DW78 in Py90) were reduced below 4 pCi/L, but not below 2 pCi/L. These two

US EPA ARCHIVE DOCUMENT

houses had crawl-space wings of about 300 and 1,100 ft², respectively.

Another approach that has been considered to aid in suction field extension beneath the membrane is to place porous matting beneath the membrane. This approach has the additional benefit of providing support to reduce the risk of membrane punctures, but the matting would add significantly to the installation cost. Sub-membrane matting has been tested in only two houses (Ni89, Py90). The results have not been definitive, with one of the houses still above 4 pCi/L (Py90), and the other requiring a BWD and water treatment component (and three SMD pipes) to be reduced below 4 pCi/L (Ni89).

- ***Number of suction pipes*** (where perforated piping is not placed beneath membrane). No systematic study has been conducted to assess the effect of the number of individual SMD suction pipes penetrating the membrane in cases where no sub-membrane perforated piping is used. In general, only one suction pipe has been installed. The only houses in which the effect of one vs. two suction pipes has been tested have been those cases where the first pipe proved to be insufficient to reduce living-area concentrations below 4 pCi/L.

  In summary, a single pipe has commonly been sufficient to reduce crawl-space houses as large as 1,500 ft² below 4 pCi/L in the living area, even when there is no gravel on the floor. This is the case despite the fact that the limited sub-membrane suction field extension data suggest that, theoretically, a single pipe should not be able to effectively treat an area that large, and despite the fact that the membrane has not always been fully sealed. However, one pipe has generally been insufficient to reduce these houses below 2 pCi/L, except where the crawl space is small (600 ft² or less, from the available data) and is a wing adjoining a basement which is also being treated.

  Data are limited from houses having crawl spaces larger than 1,500 ft². However, these limited data suggest that, with such larger crawl spaces, more than one suction pipe will likely be needed, at least when there is no gravel on the floor. If gravel were present to help extend the suction field, it might be expected that a one-pipe system would do a better job. Intuitively, complete sealing of the membrane should help reduce the number of suction pipes needed in these larger houses, although the available data are too limited to permit a definitive statement regarding the benefits of membrane sealing.

  Where sub-membrane depressurizations have been measured (Os89b, Py90), measurable depressurizations (i.e., down to 0.001 in. WG) have usually been found to extend no more than about 10 to 15 ft from the suction pipe in cases where the crawl-space floor is bare soil (no gravel, no matting). The rule of thumb discussed in Section 2.3.1e for basement houses is that, ideally, sub-slab depressurizations of approximately 0.015 in. WG (measured during mild weather) would be desirable to ensure that a SSD system is not overwhelmed by the thermal stack effect during cold weather. Sub-slab depressurizations below 0.002 to 0.005 in. WG (measured during cold weather) may be sufficient; however, such limited depressurizations may occasionally be overwhelmed by exhaust appliance operation. Sub-membrane depressurizations have been found to drop below that value within 6 to 10 ft of the SMD suction pipe. Thus, on the basis of measured sub-membrane depressurizations, one would estimate that, where no gravel is present to aid suction field extension, one SMD suction pipe would be required roughly every 100 to 400 ft² if a depressurization of 0.01 in. WG were desired, or every 400 to 900 ft² if a depressurization of 0.001 in. WG were sufficient.

  But in apparent contradiction to this calculation, houses with crawl spaces as large as 1,500 ft² have consistently been reduced below 4 pCi/L in the living area (from pre-mitigation levels as high as 20 pCi/L) with a single suction pipe penetrating the membrane at a central location. This has been the case even when there is no gravel on the floor to help distribute the suction field, and when the membrane is not fully sealed.

  The EPA program has included 13 crawl-space study houses (including 6 with adjoining wings) having crawl spaces of 1,500 ft² or smaller, where SMD systems have been installed with no sub-membrane perforated piping (Ni89, Os89b, Gi90, Mes90a, Py90). Of these 13, in only one case was one pipe insufficient to reduce living-area concentrations below 4 pCi/L (House DW60 in Py90, with a 900 ft² crawl space, which had a small adjoining slab-on-grade living area). On the other hand, the only houses among these 13 which were reduced below 2 pCi/L with a single pipe were four of the houses where the crawl space was a relatively small (300 to 600 ft²) wing adjoining a basement which was also being treated using SSD or DTD (Gi90, Mes90a). It is known that the basement SSD or DTD component, not the SMD component, was responsible for the low levels achieved in those four houses.

  Data are available from only two houses having crawl spaces larger than 1,500 ft², where no perforated piping was placed beneath the membrane (Py90). Neither house had gravel on the crawl-space floor. The first house, House DW27, had an unusually long, narrow crawl space (approximately 100 ft by 23 ft, with a total floor area of 2,000 ft²). One SMD suction pipe, toward one end of this crawl space, could reduce the living-area concentrations in this house only from 33 to 8-12 pCi/L. Adding a second suction pipe, located toward the other end of the crawl space, could reduce levels only to 5 pCi/L, despite the fact that the membrane was sealed everywhere (around the perimeter and around piers, and at seams between sheets), and despite the fact that porous matting was strategically placed beneath portions of the membrane to improve suction field distribution. A small section (250 ft²) at one end of the crawl space had been paved, and served as a basement on the same level as the crawl-space; this small basement was not treated with SSD, and thus could have been partly responsible for the failure of this house to be reduced below 4 pCi/L.

US EPA ARCHIVE DOCUMENT

The second house having a large crawl space, House DW29, had a crawl-space floor area of 2,000 ft² and an adjoining slab-on-grade living area (a converted garage) of 600 ft². With the membrane sealed around piers and seams near the pipe penetrations but nowhere else, and with no treatment of the slab on grade, one pipe toward one end of the crawl space reduced living-area concentrations from 16 to 6-7 pCi/L. A second pipe, toward the other end, reduced levels to 3 pCi/L.

There may be several reasons why a single SMD suction pipe is able to treat a floor area greater than would be estimated based upon the 0.015 in. WG rule of thumb.

- Sub-membrane depressurizations much smaller than 0.015 in. WG—perhaps too small to be measured quantitatively—may be sufficient to make the SMD system effective. Chemical smoke visualization testing around the unsealed perimeter of many of the membranes in Reference Py90 confirmed that, although the measurable sub-membrane depressurization extended only 10 to 15 ft from the suction point, some suction was in fact extending all the way to the perimeter, since smoke was being clearly drawn beneath the membrane at that location (Br92).

- The rule of thumb is based on the assumption that the SMD systems function only by the mechanism of reversing the direction of air flow between across the membrane. That mechanism would suggest that the sub-membrane region must in fact be depressurized essentially everywhere almost all of the time if the SMD system is to maintain good performance. In fact, another mechanism can also contribute—ventilation of the sub-membrane region, and dilution of sub-membrane radon concentrations.

- Or, depressurization of the entire crawl space, created by leakage of crawl-space air into the SMD system, could be reducing air flow up into the living area from the crawl space and could be increasing crawl-space ventilation, thus introducing a third mechanism.

Results have been reported from one house where site depressurization was tested in the crawl space, i.e., "SMD" with no membrane (House DW31 in Py90). The house had a moderately sized crawl space (800 ft²), and an adjoining slab on grade living area of comparable size. In this system, the suction pipes terminated in pits excavated in the soil floor, covered with treated plywood. The effect of two vs. four suction pipes was tested. With two pipes operating, one in each of two diagonally opposing quadrants of the crawl space, living-area concentrations were reduced from 26 to about 10 pCi/L. With four pipes operating, one in each quadrant, levels fell to 2-4 pCi/L. Suction measurements in test holes drilled about 1 ft deep into the soil floor confirmed that, with all four pipes operating, the soil was depressurized by 0.005 in. WG or greater at distances of 6 ft from the suction pipes.

- ***Location of suction pipes (or of perforated piping).*** The available data do not permit an assessment of the effect of pipe location.

  Where perforated piping has been placed beneath the membrane, the data are insufficient to identify any difference between placement of the piping as a loop around the perimeter vs. alternative configurations in a more central location. Some mitigators who use perforated piping prefer a strip of piping down the middle of the crawl space, for simplicity and to minimize air leakage into the system through the perimeter seam and through the block walls. Other researchers suggest a perimeter loop of piping, because wind effects may cause the greatest radon flux out of the soil to occur around the perimeter (Sc90a); also, a perimeter loop would be expected to provide the best treatment of block foundation walls, if the walls are thought to be a source. All perforated piping configurations have appeared to work well.

  Where no perforated piping has been placed beneath the membrane, single-suction-pipe systems have generally had the one pipe penetrating the membrane at a central location. Two-pipe systems have had one pipe in each half of the crawl space, sometimes toward (but never immediately beside) the perimeter wall. Since the suction field appears to extend in roughly the same manner in all directions from the suction pipes (Os89b, Py90), i.e., since sub-membrane communication appears generally uniform, such central location of the pipes would seem to make sense. Intuitively, it would be desirable to locate the pipe penetrations away from unsealed seams in the membrane, to reduce the short-circuiting of crawl-space air into the system. For example, if the perimeter of the membrane is not sealed against the foundation wall, it would seem desirable to locate the pipes at least 6 to 10 ft from the walls, since that appears to be about how far the measurable suction field may extend.

- ***Size of suction pipes.*** The lowest SMD system flows would be expected in cases where the membrane is completely sealed, there is no gravel on the floor, and there is not perforated piping beneath the membrane. Where system flow measurements have been reported under these conditions, flows have been between about 20 and 40 cfm with the standard 90-watt fans or equivalent operating at full power (Os89b, Mes90a, How92). Where the membrane is not completely sealed but conditions are otherwise similar (no gravel, no perforated piping), limited data suggest a somewhat higher range, 30 to 100 cfm (Py90, Br92). Where gravel is present but conditions are otherwise similar (membrane completely sealed, no perforated piping), again, limited data suggest a somewhat higher range, 30 to 100 cfm (Mes90a).

  This range of flows from SMD systems with no sub-membrane perforated piping (20 to 100 cfm) is almost identical to that reported in Section 2.3.1c for SSD systems. As discussed in that earlier section, the proper piping size for a given installation will depend upon the specific piping configuration and fan performance curve for that particular installation. However, in general, the

US EPA ARCHIVE DOCUMENT

commonly used 4-in. diameter piping will probably be a reasonable choice. Three-in. piping can usually be considered in cases where desired for aesthetic reasons, where the flows are sufficiently low, the piping run sufficiently short, and/or the fan performance curve suitable. In selecting the pipe size, it should be recognized that flows from SMD systems may increase over time as some of the membrane seals break, or as the membrane becomes punctured.

Where the membrane is completely sealed and there is no gravel, as in the lowest-flow case above, but where suction is being drawn on sub-membrane perforated piping, the observed range of SMD flows is 20 to 110 cfm (Sc88, Fi90, Bo91, Kl92). This range is similar to that observed above where there is no sub-membrane piping (including the no-perforated-piping cases without complete sealing and with gravel). Thus, where the membrane is completely sealed and where there is no gravel with systems having sub-membrane piping, the considerations in selecting the proper pipe diameter are the same as those discussed above for systems without such piping.

The highest SMD flows might be expected in systems where the membrane is not completely sealed, there is gravel on the floor, and suction is being drawn on perforated piping under the membrane. In two such installations where flows were reported (Fi90), flows were indeed high, 190 to 200 cfm with a 90-watt fan operating at full capacity. In each of these cases, the perforated piping formed a loop around the crawl-space perimeter; the membrane was sealed against the foundation wall, but did not always completely cover the interior. In two other installations where the membranes were completely sealed but where conditions were otherwise similar (gravel, perforated piping), flows were 100 cfm in one 300 ft^2 crawl space and 220 cfm in a second, 1,300 ft^2 crawl space. The particularly high flows in the larger house may have resulted in part because the perforated piping matrix included three lengths of parallel piping, connected to a single header.

In systems having flows in the range of 200 cfm, the use of the common 4-in. piping could result in a significant suction loss through the piping, depending upon the configuration of the piping system. Thus, if the system in fact has to be operated at such high flows, a mitigator may sometimes have to consider the use of larger piping. However, in the three houses having the flows between 190 and 220 cfm with the fan at full power, the systems were so effective with the perforated piping and the gravel, that the fans could be operated at significantly reduced power and still maintain indoor levels below 2 pCi/L. The final installations in these houses, with the fans left operating at reduced power, typically had flows in the range of 50 to 100 cfm, comparable to that in typical SSD systems. Thus, again, 4-in. piping may commonly be sufficient, but may not be crucial in some cases if there is a pressing need to use smaller-diameter piping for part of the piping route.

- ***Pits beneath membrane where pipes penetrate.*** In houses having slabs with poor sub-slab communication, an attempt is sometimes made to improve suction field extension by excavating a pit beneath the slab at the point where the SSD pipe penetrates. This pit could function both by reducing the pressure losses as the sub-slab gases accelerate to pipe velocity, and by intersecting fissures or good-communication strata beneath the soil surface. A pit beneath the SMD membrane at the point where an individual suction pipe penetrates (in cases where sub-membrane perforated piping is not being installed) might be envisioned as working by similar mechanisms.

  The available data are not sufficient to quantify the performance benefits of excavating pits of various sizes, compared against other methods for installing individual suction pipes through the membrane.

  Pits were excavated in the eight SMD installations in Reference Py90, including one in which there was no membrane (site depressurization). No results are reported assessing the effect of pit size.

  More commonly in commercial installations, no pit is excavated. Instead, the suction pipe is supported in some manner on the floor of the crawl space, and the membrane is sealed around the pipe at a height of perhaps a foot above floor level (see Figure 6). Various approaches for accomplishing this are described later, in Section 8.5.2. This method effectively provides a "pit" beneath the plastic "slab" which would serve the function of reducing the pressure losses from gas acceleration. The only difference is that in this case, the "pit" is created by raising the "slab" rather than by excavating the soil.

  Although raising the membrane will reduce pressure losses due to acceleration as effectively as would excavation of a pit, it will not accomplish the second objective of a pit, namely, to intersect fissures and strata in the soil beneath the SMD membrane. Since SMD probably functions largely by sweeping away the radon that enters the region between the membrane and the soil, the failure to help extend a suction field through sub-surface fissures may not be important. In any event, with the limited data available, no improvement in radon reductions has been demonstrated for the excavated pit versus the raised membrane approach.

- ***Nature of membrane.*** Almost all of the EPA projects and the reported commercial installations have used polyethylene sheeting as the membrane material. Where the crawl-space floor is relatively smooth and not much traffic is expected, standard polyethylene sheeting as thin as 6 mil has been used (Py90). Such standard sheeting is subject to puncture, and is protected by strips of heavier material, such as ethylene propylene diene monomer (EPDM), a rubberized roofing material, along expected traffic routes in the crawl space. More commonly, thicker, 8- to 10-mil standard polyethylene, or cross-laminated sheeting which is 8- to 10-mil equivalent, and is reportedly much more puncture-resistant than the standard material, has been used (Bro90, Fi90, Mes90a, Jo91, Sh91,

US EPA ARCHIVE DOCUMENT

US EPA ARCHIVE DOCUMENT

An92, Kl92). In a few cases, especially in walk-in crawl spaces where heavy traffic is expected, 15- to 20-mil material (or equivalent) has been used, even where the floor has been relatively smooth (Os89b, Gi90).

In several houses in Alabama where the crawl-space floors were rocky and irregular, heavy-duty reinforced industrial pit liner material was used as the membrane (Ma88).

- ***Extent of membrane.*** In almost all of the EPA study houses and reported commercial installations, the SMD membrane has covered the crawl-space floor completely. The limited exceptions include

  a) two houses in Ohio (Houses 22 and 24 in Fi90), where an 8-ft wide strip of membrane was placed around the crawl-space perimeter (covering a perimeter perforated piping loop), and was connected to sheets of pre-existing vapor barrier which covered the central portion of the floor to a large extent (but not completely).

  b) one house in Tennessee (House DW31 in Py90), where no membrane was installed (i.e., where the technique used was site depressurization).

In no case has back-to-back testing been reported of different degrees of floor coverage.

As discussed previously, excellent results were obtained in the Ohio houses, reducing living-area concentrations from pre-mitigation values of 16-17 pCi/L down to below 2 pCi/L with the SMD fan at reduced power. But the tile loop, and the gravel on the floors of both crawl spaces, were likely contributing to the success of these installations. Moreover, the central portions of the floors were not completely uncovered, since the pre-existing vapor barrier was providing at least a partial membrane. Thus, it is not clear how universally, and under what other conditions, partial floor coverage will be satisfactory. Smoke tracer testing in House 24 with the SMD system operating did show that, at an uncovered portion of the central crawl space, flow did appear to be upward from the gravel into the crawl space.

These results in the Ohio houses suggest that, in fact, flow reversal everywhere may not always be necessary for good performance, and that, under the right conditions, complete floor coverage might not be needed. However, the data are so limited that no definitive conclusions can be drawn regarding when only partial coverage may be acceptable. Thus, at the present time, it is recommended that the crawl-space floor be completely covered if this is at all possible.

Because the perforated piping loops were immediately beside the foundation wall in the two Ohio houses, it was felt to be necessary to effectively seal the membrane against the wall, to reduce air short-circuiting into the system. To ensure a permanent seal, this perimeter sealing was accomplished by adhering the plastic sheeting to the walls with a bead of sealant, then mechanically attaching the plastic by sandwiching it between the wall and a furring strip secured with explosively driven nails. Testing was not conducted to confirm that this rigorous perimeter sealing approach was indeed required. But if such a time-consuming perimeter sealing effort did in fact prove to consistently be necessary when the tiles are beside the foundation wall, the increased cost of this sealing effort could largely offset any savings achieved by not having to cover the central portion of the floor (He91b, He91c).

As also discussed previously, the four-pipe site depressurization system in Tennessee House DW31 achieved good results, reducing levels in the living area from 26 to just above 2 pCi/L. This result demonstrates that, in some cases, no membrane is required at all. Since these results were obtained on only one house, it is not at all clear how widely this approach will be applicable. It would be expected that site depressurization will be applicable only in cases where the native soil in the floor is reasonably permeable, as it visually appeared to be in DW31. Ideally, the permeable soil stratum on which suction is being drawn should be covered by a less permeable layer, to reduce the short-circuiting of crawl-space air down through the soil into the system. Terminating the suction pipes in covered pits, as in DW31, is also likely an important consideration in the design of a site depressurization system, in order to reduce pressure losses resulting from soil gas acceleration and possibly to intersect more permeable fissures/strata.

A variation of site depressurization was attempted in four crawl-space houses in Ohio (Fi90). In these houses, a single 4-in. diameter pipe was embedded about 10 ft deep into the soil outside the house, immediately beside the foundation, and suction was drawn with a 90-watt fan. No radon reduction was obtained in the living areas of these houses. The lack of success in these installations was likely due primarily to the impermeability of the native clay soil. Other contributing factors could have been the inability to excavate a suction pit beneath the pipe, and the fact that the suction was not being drawn inside the foundation.

From these results in Tennessee and Ohio, it would appear that the no-membrane site depressurization approach will be applicable only in potentially isolated cases where special geological conditions are present.

- ***Degree of membrane sealing.*** Where alternative degrees of membrane sealing have been tested in a given house, the limited results suggest that good performance can often be obtained even when the membrane is not sealed anywhere except in the vicinity of the suction pipe penetration through the membrane. But to achieve such good performance, the SMD fan must have adequate capacity to handle any increase in flows resulting from leakage through unsealed seams. The standard 90-watt fans appear generally sufficient to handle unsealed membranes, but significantly reduced performance has sometimes been observed when the fan has been operated at reduced power under such conditions.

US EPA ARCHIVE DOCUMENT

Although reasonable SMD performance has often been observed in the relatively limited number of cases where the membrane has not been completely sealed, the best radon reductions at a given system flow have generally been observed when the membrane has been completely sealed, as would be expected. Where perimeter block foundation walls are thought to be a potential source, careful sealing of the membrane will be most likely to extend the SMD suction field adequately to treat wall-related entry routes. Moreover, by reducing the amount of crawl-space air drawn into the system, sealing will reduce the risk of backdrafting combustion appliances in the crawl space, and should reduce the amount of treated house air drawn into the system (hence reducing the heating/cooling penalty). For these reasons, most mitigators routinely seal SMD membranes everywhere in commercial installations. At the present time, complete sealing of the membrane is recommended, if this is at all possible. Complete sealing includes sealing at seams between sheets; around the crawl-space perimeter; and around interior piers or any other obstructions. (Sealing around the suction pipe penetration through the membrane is required in all cases.)

In House 28 in Ohio (Fi90), the initial SMD configuration tested consisted of inserting two individual suction pipes through the pre-existing vapor barrier, which covered most of the floor. The seams between the sheets of plastic were caulked where possible, but such caulking was not possible everywhere. No effort was made to seal the plastic to the perimeter foundation wall. There was no gravel on the floor. With the 90-watt fan at full power, this system reduced living-area concentrations from 5-7 pCi/L, down to 1.0 pCi/L. This initial system was then replaced with two parallel lengths of perforated piping beneath an entirely new membrane. The sheets of the new membrane were overlapped by a foot, and attached to each other with polyethylene adhesive. The membrane was attached to the perimeter walls with sealant and a furring strip; it was not sealed around interior piers or around an interior fireplace support structure. With the fan again at full power, this upgraded system resulted in living-area concentrations of 0.5 pCi/L. The difference in radon levels with the two systems is so small that it is not clear that the improved system had any real effect; and to the extent it did have an effect, that effect could be due in part to the addition of perforated piping beneath the membrane, not just to the membrane sealing effort. The flows from the two systems were the same, 130 cfm, suggesting that the sealing did not reduce air leakage into the system.

In a second Ohio house (House 33 in Fi90), the SMD system was tested with and without the membrane being sealed around the perimeter. (The membrane was sealed at seams between sheets in all cases.) The system in this house consisted of three parallel lengths of sub-membrane perforated piping, on a gravel floor. With the membrane unsealed around the perimeter, living-area concentrations were reduced from 17 pCi/L to 13 pCi/L, with the fan at very low speed (exhausting 18 cfm); and 0.4 pCi/L, with the fan at maximum speed (exhausting 224 cfm). After the perimeter was sealed, indoor levels were reduced to 1.0 pCi/L, with the fan at a low speed which was inadvertently higher than the very low speed tested prior to sealing (exhausting 54 cfm); and 0.4 pCi/L with the fan at maximum speed (exhausting 118 cfm). Thus, at full fan power, similar indoor radon reductions were achieved with and without perimeter sealing, but sealing reduced the exhaust rate about in half. This significant impact of sealing on flows is probably due in part to the presence of gravel. The effect of sealing at lower fan speed cannot be determined, since the reduced speeds tested before and after sealing were different.

While the comparison and interpretation of the figures from House 33 is complicated by the differences in fan speeds tested before and after perimeter sealing, two possible effects of the sealing effort are apparent. First, if the fan capacity is great enough, very good SMD performance can be achieved even with the membrane perimeter unsealed. Second, when the membrane is sealed, comparable performance may sometimes be achieved with lower system flow rates than is possible without sealing, thus reducing the risk of backdrafting and, likely, the heating/cooling penalty. The good reductions observed in these houses without complete membrane sealing may have been due in part to the facts that a) sub-membrane perforated piping was being used in both cases, helping to ensure good distribution of the suction field even with membrane leakage; and b) the gravel in House 33, again helping to ensure good suction field distribution.

In four Maryland houses where a basement adjoined the crawl space, the crawl-space SMD system was tested with and without the membrane sealed to the foundation wall around the perimeter (Mes90a). In all cases, the membrane was sealed at seams between sheets. The results with and without perimeter sealing were conducted with only the SMD system operating; the SSD or DTD system in the adjoining basement was disconnected during this testing. The SMD systems consisted of single suction pipes penetrating the membrane at a central location. Two of the houses had gravel on the floor, two did not. In all four cases, sealing the membrane perimeter reduced radon concentrations in both the basement and the upstairs living area, usually by 0.5 to 1.6 pCi/L. (Pre-mitigation levels in these houses were generally low, 3 to 11 pCi/L; thus, these relatively small changes in the absolute radon reduction represented a fairly significant increase in the percentage reduction.) While the absolute reductions in radon concentrations were relatively small, and thus subject to some uncertainty, the fact that levels consistently went down after perimeter sealing suggests that this could be a real effect.

In most other reported studies, the SMD systems were either tested only with the membrane sealed everywhere (Ni89, Gi90, Py90, Du91), or with the membrane sealed nowhere except near the suction pipe penetration (Py90). The number of houses involved is too few, and the number of other variables being varied is too great, to

permit any assessment of the effects of membrane sealing from these other studies.

d) Mitigation system operating variables

- ***Fan capacity.*** Most of the reported SMD installations have involved the 90-watt fans operating at full power. Since fan capacity has generally not been varied, not much can be said at this time regarding the ability to achieve adequate radon reductions with smaller fans or with the 90-watt fans at reduced power. Given the moderate flows usually measured in SMD systems (commonly 20 to 100 cfm, as discussed under *Size of suction pipes* above), and given the suction that appears to be necessary to extend a suction field beneath the membrane (see *Number of suction pipes* above), use of 90-watt fans at full power in SMD applications appears reasonable.

  The one study reporting the use of 90-watt fans at reduced power has been the testing on four crawl-space houses in Ohio (Fi90). These houses all had perforated piping beneath the membrane, and three had gravel on the floor, improving the potential for success with the fans at reduced power. In three of these houses, operation of the fan at low power, to exhaust about 50 cfm, reduced living-area concentrations below 2 pCi/L, and often to 1 pCi/L and less (from pre-mitigation levels of 5-17 pCi/L). In the fourth house (House 22), the fan had to be operated at medium power, exhausting about 100 cfm, to be reduced below 2 pCi/L. But even in this fourth house, operation at low power (exhausting 50 cfm) *was* sufficient to reduce levels from 17 to below 4 pCi/L. To achieve these flows and reductions at reduced fan power, it was generally necessary to have sealed the membrane at seams and around the perimeter.

  Operation of the fan at full power in the Ohio houses (exhausting 130 to 224 cfm) gave further marginal reductions, reducing living-area concentrations below 1 pCi/L in all cases. Moreover, as the experience in House 33 showed (see *Degree of membrane sealing* above), full-power operation made sealing of the perimeter and seams less necessary; at maximum fan power, indoor levels below 1 pCi/L were achieved even without sealing the membrane perimeter.

  It is re-emphasized that the success with reduced fan capacity in the Ohio houses is likely due to the facts that there is sub-membrane perforated piping and, in three of the houses, gravel on the floor to help distribute the suction. The flows observed in those houses with the fan at low to medium power (50 to 100 cfm, often with the membrane sealed) are the same as (or higher than) those observed with a 90-watt fan at full power in houses without perforated piping or gravel.

  In summary, a 90-watt fan at full power is advisable when the SMD system has no perforated piping under the membrane, when the membrane is not completely sealed, and when there is not gravel on the floor. When there is perforated piping, the membrane is sealed, and there is gravel—i.e., when there is good sub-membrane communication, and the necessary flows can be obtained with less fan capacity—operation at reduced fan power (or with a smaller, 50-watt fan) may be satisfactory. But even in this latter case, there will likely always be some improvement in performance with full-power operation. Where there is doubt regarding whether full-power operation is required, the operating cost savings resulting from operation at reduced power is probably often not sufficient to justify the risk of operation at less than full power (He91b, He91c).

- ***Fan in suction vs. pressure.*** Operation of SMD systems with the fan reversed to blow outdoor air beneath the membrane, has not been tested. Based upon the experience with fan reversal in other ASD techniques and recognizing the general leakiness of SMD membranes relative to slabs, as well as the poorer performance generally observed when the crawl-space is ventilated with forced-air supply from outdoors (crawl-space pressurization) vs. forced-air exhaust from the crawl space (depressurization), it would be expected that sub-membrane pressurization would likely be less effective than SMD. See Section 2.4.

e) Geology/climate variables

- ***Source term.*** With the possible exception of House OP-05 in New York (Ni89), none of the tested crawl-space houses has been reported to have high soil gas radon levels (above 2,000 pCi/L). Thus, the effects of source term on SMD systems cannot be assessed.

- ***Permeability of underlying soil.*** Except for House DW31 in Tennessee (Py90), which visually appeared to have relatively loose soil as the crawl-space floor, all of the tested crawl-space houses have apparently been built on fairly impermeable clay. Thus, an assessment of the effects of soil permeability is not possible based upon the data.

  A four-pipe site depressurization system gave good reductions in House DW31, reducing indoor levels from 26 to 2.2 pCi/L, suggesting that "SMD without a membrane" may become possible when soil permeability is good. In general, site depressurization would be expected to work best when the permeable soil was in a stratum beneath a less permeable layer which would serve as a cap to reduce the short-circuiting of crawl-space air into the system.

  Intuitively, permeable soil on the crawl-space floor would be expected to play a role analogous to that of gravel beneath the membrane of a SMD system, namely, helping to distribute the suction field under the membrane. This could potentially improve performance of SMD systems not having perforated piping under the membrane.

- ***Climatic conditions.*** There are no data indicating the effects of temperature, winds, barometric pressure, or precipitation on SMD performance. Since sub-membrane depressurizations generally drop below 0.001 in. WG

US EPA ARCHIVE DOCUMENT

within 10 to 15 ft of a suction pipe, crawl-space depressurizations created by thermal and wind effects might be expected to more readily overwhelm a SMD system compared to a SSD system, since sub-slab depressurizations are often greater. But on the other hand, a crawl space is leakier than a basement, at least when the crawl space is vented and unheated; the crawl space might thus be expected to become less depressurized than a basement, and thus provide less of a challenge to the low sub-membrane depressurizations.

f) Mitigation system durability

- ***Radon reduction performance.*** Little data are available on long-term radon reductions achieved by SMD systems. The one DTD + SMD installation in a basement-plus-crawl-space house in Pennsylvania has consistently maintained basement concentrations below 2 pCi/L according to winter-quarter alpha-track detector measurements over the three years since installation (Sc89, Fi91). In three of the four "pure" crawl-space houses in Ohio where an annual alpha-track detector measurement was successfully completed following installation, living-area concentrations remained below 2 pCi/L (and below 1 pCi/L in two of them) (Ro90). In two of the four crawl-space houses in Maryland having adjoining basements (Mes90a), where annual alpha-track measurements were successfully completed following installation, the combined SSD/DTD + SMD systems in these houses maintained concentrations well below 1 pCi/L in both the basement and the upstairs living area (Mes90c).

- ***System suctions and flows.*** System suctions and flows remained steady in the one Pennsylvania house having a combined basement DTD system plus crawl-space SMD system, over the three years following installation (Fi91).

- ***Equipment durability.*** No fan failures have been reported for SMD systems in any of the EPA study houses.

  In addition to fan failures, another concern in SMD installations is the integrity of the membrane over time, including ruptures in the plastic itself, and failures in membrane seals. Failures could result from foot traffic in the crawl space, or to the drying or embrittlement of the sealants and plastic over time due to, for example, UV effects. Such failures in membrane integrity could degrade system performance, especially if the breach occurred near the penetration of a suction pipe through the membrane or for some length beside sub-membrane perforated piping.

  Essentially no data exist on the various potential types of membrane failures, or on the effects of any such failures on SMD performance. Two mitigators report having observed cases where rodents had caused extensive damage to membranes within less than a year of installation, in Iowa and Florida (Wi90, Ba92); however, other mitigators report that such rodent damage is not a common problem (An92, How92, Sh91).

2.4 Performance of Active Soil Pressurization Systems

All of the preceding discussion has addressed soil ventilation systems where the fan is oriented to draw suction on the soil. As discussed in Section 2.1, soil depressurization systems function by a) maintaining a negative pressure in the soil relative to the pressure inside the house, thus preventing soil gas from entering the house; and b) probably by one or more other mechanisms, including true soil ventilation, which involves dilution of the soil gas with air from the house and outdoors. The first mechanism probably tends to be the more important in most cases. Hence, soil depressurization systems tend to function best in cases where system flows are not particularly high, because such conditions make it easier for the fan to maintain reasonable suctions in the soil.

In some cases where flow is unusually high, it can be desirable to reverse the fan, so that the fan blows outdoor air under the foundation. This approach is referred to as active soil *pressurization*. In high-flow cases, it can sometimes be difficult for a soil depressurization system to maintain adequate suctions in the soil, and the second mechanism listed above (true soil ventilation) becomes increasingly important. In these high-flow cases, soil pressurization is an alternative to placing a larger fan on a soil depressurization system.

Specific cases where active soil pressurization has been found to be a potentially viable alternative include

1) Sub-slab pressurization systems, as an alternative to SSD systems, where the underlying soil is a highly-permeable, well-drained gravel (Tu87, Kn90), or a highly permeable, highly fissured shale or limestone (Br89). Modeling studies also suggest that sub-slab pressurization may perform better than SSD when the native soil is highly permeable (Ga92). Outdoor air leaking into the system through the permeable soil or rock interferes with suction field extension by the SSD system. In such cases, switching to sub-slab pressurization may be preferred over the options of adding more SSD suction pipes or using a higher-capacity SSD fan.

   If the house had drain tiles, drain-tile pressurization could be considered instead of DTD when the native soil is highly permeable. Houses on such well-drained soils are less likely to require drain tiles, although drain tiles may still sometimes be present.

2) Block-wall pressurization systems, as an alternative to BWD, in cases where depressurization of the leaky block walls draws enough air out of the basement to cause back-drafting of combustion appliances in the basement (Sc88).

Where the fan is operated to pressurize the soil, the system is probably operating by two mechanisms. First, the outdoor air being blown underneath the slab creates a region around the foundation that is pressurized relative to the surrounding soil, thus preventing soil gas from flowing toward the house by convection. Second, if the underlying soil is sufficiently po-

US EPA ARCHIVE DOCUMENT

rous, the air being forced under the slab (or into the walls) may flow into the soil with a sufficient velocity to overwhelm diffusive movement of radon toward the foundation. To the extent that these two mechanisms are not fully effective, any radon that continues to enter the sub-slab region (or the walls) by either convection or diffusion will be forced into the house by the pressurization system, and system effectiveness will be reduced.

The failure of pressurization systems to match the performance of *de*pressurization systems in many cases, as discussed later, probably results because the pressurization systems are not able to establish sufficient pressures or air flows in the soil to completely prevent convective and diffusive radon movement to the foundation. The reason why pressurization systems often do not perform as well under tight-soil, low-flow conditions is probably that flows of air into the soil are not sufficiently high to overwhelm radon diffusion under those conditions.

Under high-flow conditions, both pressurization and depressurization systems may have problems maintaining pressures (or suctions) everywhere under the slab (or in the wall). The reason why pressurization systems sometimes perform better under these conditions may be that pressurization is at least partially forcing the radon away from the foundation, whereas depressurization draws it toward the foundation.

Another criterion for effective pressurization performance, in addition to highly permeable soil, may be that the soil gas radon concentration should not be particularly high (e.g., perhaps on the order of 1,000 pCi/L or less) (Br89).

Where outdoor air is being blown into a block wall—where the high flows are being created by the leakiness of the block walls rather than by high permeability in the native soil—the block-wall pressurization system may also be working in part by basement pressurization or basement ventilation with unconditioned outdoor air.

Various potential problems have been suggested which might result from operation of systems in pressure. These include 1) potential freezing around the foundation in cold climates, when cold outdoor air is blown beneath the slab, potentially leading to structural problems; 2) potential freezing inside framed walls in block-wall pressurization systems, especially in humidified basements, due to the exfiltration of relatively moist indoor air created by the basement pressurization component of the system; 3) possible condensation of indoor moisture on slab or wall surfaces being cooled by the outdoor air, during cold weather; and 4) potentially increased levels of termiticides, spores, or soil moisture inside the house, due to the increased flow of sub-slab gas up into the house created by the pressurization system. For the most part, insufficient data are available regarding soil pressurization systems to enable an assessment of the seriousness of these potential problems.

2.4.1 Active Sub-Slab Pressurization

Active sub-slab pressurization systems have been reported in five basement houses near Spokane (Tu87), and in four basement houses in New York (Br89, Kn90), where highly permeable native soils resulted in sub-slab pressurization providing greater indoor radon reductions than did SSD. One mitigator in the Spokane area (Bar90) has also reported that sub-slab pressurization systems sometimes provide better reductions than do SSD systems.

In the five Spokane houses, sub-slab pressurization systems with one to four pressurization pipes were initially able to reduce all of the houses to 3 pCi/L and less in the living area, based on short-term measurements. Pre-mitigation levels in these house were typically 15 to 50 pCi/L, although one house had a pre-mitigation level of 106-141 pCi/L. To achieve 3 pCi/L in several of the houses, the sub-slab pressurization fans being used had to be operated at full power. For these fans in these houses, full power produced a pressure of 1.25 to 2 in. WG in the pipes near the slab, and a flow of about 50-200 cfm in the total system. By comparison, when the fans were reversed to operate in suction, two of these five houses were reduced to 3 to 5 pCi/L in the living area, and the other three were reduced only to 7 to 19 pCi/L.

In one of the houses in New York (Kn90), a two-pipe SSD system with a standard 90-watt in-line duct fan reduced the basement concentrations from a pre-mitigation level of 169 pCi/L to a 12-day post-mitigation average of 10.5 pCi/L. The sub-slab appeared to be being depressurized everywhere, although in some locations the depressurization was less than 0.001 in. WG. When the fan was reversed to pressurize the sub-slab, basement levels fell to a 6-day average of 3.3 pCi/L.

In the other three New York houses (Br89), sub-slab pressurization reduced indoor radon to about 2 pCi/L, from levels which sometimes rose to several hundred pCi/L. SSD or DTD had initially been tested in two of these houses. In one of these two, the depressurization system had given no radon reductions; in the other, depressurization could reduce levels only to 18 pCi/L.

The effect of sub-slab pressurization vs. SSD has also been tested in 16 basement houses and 7 slab-on-grade houses where the underlying soil had low permeability (Ma88, Sc88, Tu89, Du90, Fi90, Py90). In none of these cases was the performance of the pressurization system better than that of the SSD system. Occasionally, the performance was comparable, but most commonly, the pressurization system gave much poorer reductions.

The 16 basement houses were in the states of New Jersey (Tu89, Du90), Pennsylvania (Sc88), and Tennessee (Ma88, Py90). All but three of these houses had one or two sub-slab ventilation pipes; these other three had four to five pipes. The communication beneath the basement slab ranged from good to poor among these houses. The native soil was commonly a low-permeability clay. Half of the basements had adjoining slab-on-grade or crawl-space wings; where there was an adjoining slab, there was often (but not always) at least one ventilation pipe inserted beneath the adjoining slab.

With the systems in these 16 basement houses operating in suction 14 of the houses (almost 90%) were reduced to 4 pCi/L and less; and 10 (about 60%) were reduced to 2 pCi/L and less in the basement (from pre-mitigation levels ranging from

US EPA ARCHIVE DOCUMENT

12 to 156 pCi/L). By comparison, when the fans were reversed to pressurize the sub-slab, the results were dramatically poorer only two of the houses (less than 15%) were reduced below 4 pCi/L; and only two (these same two) were reduced to 2 pCi/L and less.

Operation in pressure caused post-mitigation levels to increase by 4 to 40 pCi/L in all but two of the 16 houses, compared to the post-mitigation levels when the system operated in suction. In those two, the increase was 0 to 1 pCi/L. In none of these 16 houses did operation in pressure result in reduced post-mitigation concentrations compared to operation in suction. But in all cases, operation in pressure did provide some reduction in indoor levels compared to pre-mitigation concentrations; i.e., in no case were post-mitigation concentrations greater than the pre-mitigation levels during operation in pressure.

Two of these studies (Sc88, Py90) reported increases in soil gas odors within the house when the SSD fan was reversed to operate in pressure. One of the studies (Py90) measured roughly five- to ten-fold increases in the termiticide aldrin in the basement air of one house when the fan was reversed, although aldrin levels appeared to have returned to their original values after the system had operated in pressure for 10 weeks.

The seven slab-on-grade houses with low soil permeability where the SSD fans were reversed were all in Ohio (Fi90). All of these systems had one or two ventilation pipes. There was a good layer of aggregate beneath the slab in all of these houses, although communication in some of them was interrupted by sub-slab forced-air supply ducts. The underlying native soil was a low-permeability clay.

With the systems in these seven slab-on-grade houses operating in suction, all of the houses were reduced below 4 pCi/L, and six (about 85%) were reduced below 2 pCi/L. With the fans reversed to pressurize the sub-slab, reductions were dramatically poorer: only three of the houses were still below 4 pCi/L, and only one was below 2 pCi/L. Operation in pressure caused post-mitigation levels to increase by 1 to 13 pCi/L, compared to the post-mitigation levels during operation in suction. But again, the sub-slab pressurization system did provide some reduction in radon, compared to pre-mitigation concentrations.

In summary, sub-slab pressurization has consistently given better reductions than has SSD in houses built on well-drained gravel soils and on highly fractured rock. Sub-slab pressurization has consistently given poorer reductions than has SSD in houses built on low-permeability soils, regardless of whether or not there is a good layer of aggregate beneath the slab.

There is insufficient experience with active sub-slab pressurization systems to permit a definitive review of the effects of the various house design and operating variables, and the various system design and operating variables, analogous to that presented in Section 2.3.1 for SSD. Some of the information presented in Section 2.3.1 would be applicable to, or could be adapted to, pressurization systems.

Some results have been presented regarding the durability of the five successful pressurization systems in Spokane (Pr89). These follow-up measurements included quarterly alpha-track monitoring during a 2-year period after installation, and system inspection and flow measurements after 2 years of operation.

All five of the Spokane houses had at least one quarterly alpha-track above 4 pCi/L in the living area (compared to short-term post-mitigation measurements indicating about 2 pCi/L and less immediately after installation). In all cases, homeowners reported that the system had been turned off at least part of the time during mild weather, undoubtedly contributing to the elevated levels. In one house, a system failure resulted in significant vibration noise which resulted in the fan being turned off for most of the 2-year period, so that living-area concentrations remained at pre-mitigation values (around 30 pCi/L). In a second house, a similar failure resulted in significant air leaks between the fan and the ventilation pipes, although the system was left operating. In this second house, living-area concentrations rose to about 30 pCi/L toward the end of the 2-year period (compared to a pre-mitigation value of 140 pCi/L), after having remained between 2 and 4 pCi/L for the year and a half prior to the failure. The problems with the installations in these latter two houses do not reflect an inherent problem with the durability of sub-slab pressurization systems, but rather, reflect the formative stage of radon mitigation system design at the time that these systems were installed (Winter 1985-86).

Pressure and flow measurements in the five Spokane systems after 2 years of operation showed that system pressures had increased since installation, and flows had decreased, in all cases. Inspection in two of the houses showed that dust and debris had accumulated on the surface of the soil under the slab, at the point where the ventilation pipe terminated just below the slab. Presumably, this debris had been entrained in the fan inlet, which had no screen, and blown into the system piping. Removal of this debris in the two houses resulted in a substantial recovery toward original pressures and flows. The apparent increases in indoor radon levels in these houses could be due in part to the reduced flows caused by this debris, which may have plugged the interstices between soil particles. It was recommended that future sub-slab pressurization systems be installed with cleanable filters on the fan inlet, and with gauges to alert the homeowner if system pressure is changing (Pr89).

In summary, the fact that some radon measurements exceeded 4 pCi/L in all five of the Spokane houses over the 2 years following installation does not necessarily reflect an inherent problem with the durability of sub-slab pressurization systems. The elevated levels may result from a combination of a) correctable problems in the design of these particular early installations; and b) homeowner intervention, in turning the systems off. Accordingly, a definitive statement cannot be made from these limited results regarding the durability of sub-slab pressurization systems being designed today. If filters are required in order to prevent debris buildup in the system, the homeowner is going to have to be alert to need for continuing maintenance of this filter.

US EPA ARCHIVE DOCUMENT

Because of the limited applicability of, and experience with, sub-slab pressurization systems, the emphasis in this document is on SSD (Section 4). Sub-slab pressurization is addressed more briefly, in Section 9.

2.4.2 Active Block-Wall Pressurization

Active block-wall pressurization systems have been reported in three basement houses in Pennsylvania (Houses 2, 5, and 9 in Sc88). In Houses 2 and 9, the block-wall system was of the "baseboard duct" design, and each house had two fans blowing into the duct; House 5 had an "individual-pipe" configuration, with one fan. All three houses had a very high source term, and pre-mitigation concentrations in the basement ranging from 110 to 533 pCi/L. In each case, BWD had been attempted first, but had been converted to a pressurization system because of back-drafting of wood stoves and fireplaces.

Unfortunately, in none of the Pennsylvania houses was the same block-wall ventilation system tested back-to-back in suction and pressure, to enable a direct comparison of the two approaches. In all cases, some other system modification (use of different fans, additional sealing) accompanied the reversal of the fan. However, the radon reductions achieved in suction and in pressure were generally comparable, with pressure seeming to give slightly greater reductions in two of the houses, and suction slightly greater in the third house.

In only one of the three houses, House 2, was the block-wall pressurization system able to reduce basement concentrations below 4 pCi/L (when supplemented by a well water treatment system), based upon short-term measurements immediately after installation. Houses 5 and 9 achieved basement concentrations of 5 and 7 pCi/L, respectively, based upon the short-term measurements, although about 3 pCi/L of the residual level in House 9 might have been due to well water.

Winter-quarter alpha-track detector measurements in these houses during the three winters following installation have shown basement and living-area concentrations holding relatively steady at values above 4 pCi/L (Fi91). In House 2, the average basement reading over the three winters has been 4.3 pCi/L; in House 5, 4.8 pCi/L; and in House 9, 11.5 pCi/L.

These concentrations represent substantial percentage reductions from the high pre-mitigation levels, but reveal that some entry routes are not being adequately treated by these systems. Sub-slab pressure field extension measurements in House 2 indicated that the sub-slab in that house was apparently being effectively pressurized by the baseboard duct system. (Sub-slab measurements were not completed in the other two houses.) Presumably, the flows that could be maintained by the systems were not adequate to sufficiently dilute the high radon concentrations around the foundation of these high-source-term houses, and were not adequate to prevent some radon from entering the wall void network. If the radon could reach the sub-slab and wall void regions, the pressurization system would force it up into the house.

None of these three houses were optimal for block-wall treatment, due to inaccessible top voids in the block wall, and due to fireplace structures. As discussed regarding BWD systems in Section 2.3.4, neither of the two stand-alone BWD systems in this Pennsylvania project that were installed in non-optimal houses achieved basement concentrations below 4 pCi/L, either.

In summary, from the very limited results available with block-wall pressurization systems, it is not apparent that block-wall pressurization is either less or more effective than BWD. Neither approach appears to be a reliable method for reducing levels below 4 pCi/L when applied as a stand-alone method, especially not in houses which have high pre-mitigation levels and which are not optimal for block-wall treatment. BWD appears to have an advantage in that it can be used as a supplement to SSD systems.

2.5 Performance of Passive Soil Depressurization Systems

All of the preceding discussion of soil depressurization systems has addressed the case where an electrically powered fan is being used to draw suction on the soil. It is the use of the fan that results in these systems being referred to as active soil depressurization systems. The fans commonly used are capable of developing suctions of about 1 in. WG and higher in the system piping. With that amount of suction in the system piping, the chances are improved that the suction field will extend beneath the entire slab and around the foundation, and that the conservative goal will be met of maintaining about 0.025 to 0.035 in. WG depressurization everywhere beneath the slab during mild weather with exhaust appliances off. (See Section 2.3.1b, *Operation of central furnace fan, and exhaust fans*, and Section 2.3.1e, *Climatic conditions*).

Nominally, soil depressurization systems can also be operated in the passive mode, i.e., without a fan. Passive systems rely on natural phenomena to develop the suction in the stack. These natural phenomena include a) thermal effects, created when the stack temperature is warmer than the outdoor air, causing the soil gas inside the stack to rise; and b) wind movement over the roofline, which creates a low-pressure region over the roof.

Passive soil depressurization systems may operate by two mechanisms. One mechanism is soil depressurization, as with active systems, using the fairly low naturally-induced suctions listed in the preceding paragraph. The second possible mechanism is development of a "pressure break" in the aggregate bed beneath a slab or in the region under a SMD membrane, i.e., an equalization of sub-slab or sub-membrane pressures with outdoor pressures, providing a buffer isolating the soil from the depressurized house. Such a pressure break could reduce the house-induced suction on the soil, and hence amount of radon drawn out of the soil.

In passive systems, the exhaust stack generally extends up through the house indoors, providing a direct route to the roof from the suction pipe penetrations through the slab, sump cover, or crawl-space membrane. To the extent that passive systems rely upon the first mechanism above (soil depressurization), the important thermal contribution to the passive suction would be largely lost during cold weather if the stack

US EPA ARCHIVE DOCUMENT

extended up outside the house or through an unheated garage, as is sometimes done with active systems. The thermal effects in passive soil depressurization systems are exactly analogous (and similar in magnitude) to the thermal stack effect which is drawing soil gas into the house. The difference is that the stack is providing the soil gas with a direct "thermal bypass" up to the roof.

The primary problem with passive operation is that the natural suctions produced in the stacks are quite low. The thermally-induced depressurization that would be created in a two-story stack during cold weather would be on the order of 0.015 in. WG, the same as the thermally-induced depressurization in the basement. Depressurizations that have been measured in passive stacks have consistently been lower than 0.1 in. WG, and often less than 0.05 in. WG (Gi90). These passive depressurizations are 10 to 100 times lower than those usually maintained in active system piping. With such low suctions, passive systems can have difficulty maintaining adequate depressurizations everywhere beneath the slab or membrane, to the extent that passive systems rely on the soil depressurization mechanism.

To the extent that passive systems rely on the pressure break mechanism, an analogous problem may exist, i.e., difficulty in buffering the soil from the house at all locations using only a single pressure-relief pipe. From the standpoints of both the soil depressurization mechanism and the pressure break mechanism, perhaps connection of the passive stack to a network of perforated piping under the slab or the SMD membrane would aid in the extension of the suction field or of the pressure-break buffer. However, there are no definitive data quantifying the benefit of such sub-slab or sub-membrane piping.

An added concern is that the performance of passive systems may be variable, changing as the temperatures and winds change, varying the natural suction in the stack.

One key advantage of passive systems, if they perform well, is that they avoid the need for homeowner maintenance of a fan. The risk is thus eliminated that house occupants might be subjected to high radon exposures over a long period if the homeowner fails to notice or repair a malfunctioning fan, a potentially important consideration. However, passive systems will not necessarily be maintenance-free; they may require homeowner attention in maintaining seals of slab cracks/openings (since system flows/suctions will be too low to tolerate much short-circuiting), in ensuring that the stack outlet does not get restricted by debris such as leaves (since flows may be too low to blow debris away), and in verifying that system suctions/flows are being maintained. Another advantage of passive systems is that they avoid any noise associated with fan operation or with the rapid release of exhaust gas from the stack outlet. (Generally, noise associated with fan operation in active systems can be significantly reduced by proper mounting of the fan and piping.)

Passive systems will also avoid the cost of electricity for operation of a fan, and, because of their low flows, will significantly reduce the heating/cooling penalty associated with active systems. The maximum savings in electricity and heating/cooling bills resulting from these factors will be on the order of $7.50 per month (He91b, He91c), an amount which many homeowners will not notice, but an amount which would add up over time and which could have an impact on national energy consumption. Fan maintenance costs would be eliminated. Eliminating the fan would also reduce system installation costs by an amount equal to the cost of the fan and the associated wiring, although there could be offsetting installation cost increases due to increased foundation sealing requirements, efforts to improve the extension of the weak suction field, and the need for an interior stack.

In summary, there are some advantages associated with passive systems. However, these advantages will be achieved at the expense of reduced radon reduction performance compared to active systems, based upon data available to date. The reduced performance of passive systems relative to active systems likely results because any benefits resulting from the passive pressure break mechanism are not sufficient to compensate for the greatly reduced role of the soil depressurization mechanism caused by the generally weak passive suction field.

From a practical standpoint, passive soil depressurization will likely prove to be applicable only in cases where sub-slab communication is very good. Good communication will be necessary to permit reasonable extension of the weak passive suction field, or for the development of a reasonable pressure break with a single passive stack. A tight slab (or SMD membrane) will also likely be required. Significant air leakage into the sub-slab region from any source will likely overwhelm the weak passive suction field; significant openings between the sub-slab region and the house would tend to defeat the pressure break.

On this basis, it would be expected that passive soil depressurization systems will likely work best in houses where there is good aggregate under the slab, and where the slab is tight or is accessible for sealing. The presence of an interior drain tile loop might be expected to aid in the distribution of the weak suction field, or in development of the pressure break; however, there are no definitive data demonstrating that such a drain tile loop will in fact be beneficial. Passive soil depressurization will not be applicable in cases where high system flows would be expected, such as DTD or SSD systems in houses having badly cracked slabs than cannot be effectively sealed, or such as BWD systems. Passive operation of a DTD or SSD system might be expected to perform best when the foundation wall is constructed of poured concrete, so that the system would not have to address radon entry into (and air flows from) hollow block foundation walls.

Under the favorable conditions defined above, passive systems can sometimes be sufficient to reduce slightly elevated houses below 4 pCi/L. However, the performance in a given house cannot be predicted prior to installation. Also, the performance may be expected to vary over time, as outdoor temperatures and winds change (varying the suction in the passive stack) and as exhaust appliances are operated (potentially overwhelming both the low passive suction and the pressure break). Thus, whenever a passive system is installed, the homeowner should be prepared to make frequent measurements in the house for a period of time after installation, in

US EPA ARCHIVE DOCUMENT

order to understand the conditions (such as warm temperatures, low winds, and appliance operation) that result in the passive system being overwhelmed. The mitigator or owner must also be prepared to install or activate a fan on the system if these measurements show that a fan is necessary.

The available data base on the performance of passive soil depressurization systems is very limited.

In one project where passive systems were retrofit into existing houses in Maryland (Gi90), testing was conducted on ten passive SSD installations (with no perforated piping beneath the slab), two DTD systems, and two SMD systems. The nature and extent of the drain tiles in the two sump/DTD systems are unknown. Both of the SMD systems included a network of perforated tiles beneath a completely sealed membrane. The aggregate beneath the slabs was good in some cases, and poor or uneven in other cases.

The passive systems in these 14 existing Maryland houses typically provided moderate radon reductions (30 to 70%), although reductions ranged from a low of zero to a high of 90%. In only two of the houses (047 and 079) was the passive system adequate to reduce indoor levels below 4 pCi/L.

The two Maryland houses giving the best reductions (Houses 004 and 079, achieving up to 80 to 90% reduction) had SSD systems with no sub-slab piping, but had good aggregate and poured concrete foundation walls. Two houses having poor/uneven aggregate (054 and 074) gave poor performances with passive SSD systems (0 to 40%). However, good communication was not sufficient, by itself, to ensure high radon reductions. Houses with poured foundations consistently gave better reductions than those with block foundations, with the highest reductions in block-foundation houses being 50%.

Of the two houses having sumps with at least partial drain tile loops to help distribute the suction, one (061) achieved only low to moderate reductions (15 to 50%), while the other (096) did somewhat better (35 to 75%). Of the two houses having passive SMD systems, only one (047) gave reasonably good reductions (20 to 70%), undoubtedly due in part to the fact that the "passive stack" in this house consisted of the furnace flue, which increased the passive suction when the furnace was operating.

The passive suctions measured in these Maryland stacks ranged from zero to 0.1 in. WG. The passive SSD systems were found to create measurable sub-slab depressurizations as far as 40 ft away from the suction pipe in one case, but more commonly, the measurable sub-slab suction did not appear to extend more than about 20 ft from the pipe.

When these passive soil depressurization systems were activated using a standard 90-watt in-line duct fan, radon reductions increased to 90-99% in all cases, reducing indoor levels to 1 to 2 pCi/L or less (Gi90). In no case did activation of the system fail to provide significant additional reductions beyond those achieved with the passive system.

Another study addressed two newly constructed basement houses in the Washington, D.C., area, which had been built with a good layer of aggregate, with perforated piping beneath the slab, and with slab sealing at the wall/floor joint and at slab penetrations, in order to facilitate radon mitigation. Both houses had poured concrete foundation walls, aiding the performance of the passive system. A passive stack drawing suction on the sub-slab piping in these houses provided average radon reductions of 75 to 90% (Sau91a).

These reductions in the two Washington, D.C. houses were obtained in both summer and winter, indicating reasonable performance even in warm weather when thermal effects would not be contributing to the natural suction. In one house, the passive stack was sufficient by itself to reduce the house below 4 pCi/L, from pre-mitigation levels as high as 20 pCi/L during the winter. In the second house, the passive system reduced winter levels from 29 to 7.5 pCi/L; activation of the system reduced levels below 1 pCi/L. In the summer, the passive stack by itself reduced levels from 2-4 pCi/L to below 1 pCi/L in both houses. The low radon levels achieved during mild weather (when the passive depressurization mechanism might be expected to be playing only a minimal role) could be a commentary on the importance of the pressure break mechanism, as well as the naturally reduced driving forces existing during mild weather.

While moderate to high radon reductions were achieved with the passive stack in both houses, indoor levels were subject to occasional spikes, presumably due to basement depressurization caused by weather effects and forced-air furnace operation.

As an extension of the previous study, measurements were completed in 15 newly-constructed houses in the Washington, D. C., area having passive stacks (Sau91b). As with the two houses discussed in the preceding paragraph, these houses all had a good aggregate layer, perforated piping beneath the slab, and slab sealing. Based upon 1- to 2-week continuous radon measurements with and without the passive stack capped, the passive systems were providing reductions ranging from 9 to over 90%, with average reductions of 64 to 70%. Radon concentrations were reduced from an average of 8-18 pCi/L, to an average of 2.5-6 pCi/L. Eight of these 15 houses were reduced below 4 pCi/L by the passive system, although a couple of these houses had pre-mitigation levels below 4 pCi/L to begin with. Operation of a mitigation fan on six of these houses provided substantial additional reductions beyond those achieved with the passive system, reducing levels below 1 pCi/L in all six cases. Again, it is believed that basement depressurization by forced-air return ducts in the basement contributed to overwhelming of the passive systems.

Of the 15 houses in the preceding study (Sau91b), the passive system provided reductions of at least 50% in all but 5 of them. All five of these less successful houses exhibited some problem potentially explaining the reduced passive performance. In three of these houses, sub-slab communication was found to be lower than would have been expected had the specified sub-slab aggregate been properly installed. In the other two, the passive stack was in an unheated garage, thus reducing the contribution of thermal effects to the passive suction.

In another project, passive SSD or DTD was tested in two new basement houses in Pennsylvania which had been built with a good aggregate layer, capped sumps with an interior drain tile loop beneath the slab, and with sealing of the wall/floor joint (Br91a). Both houses had poured concrete foundation walls. In the first house (House PA1), a single SSD pipe penetrated the slab and was not directly connected to the sump or drain tiles. The passive stack was routed through the roof of a one-story wing of the house, adjoining the two-story wing over the basement (Br92). Passive operation of this system in House PA1 provided essentially no reduction in the basement radon concentrations (8-10 pCi/L), based upon back-to-back 1-week measurements with and without the stack capped. Activation of the system reduced levels to 1-2 pCi/L.

The system in House PA1 was later modified to direct the stack straight up through the two-story wing of the house above the basement (Br92). With this new configuration, passive operation of the system reportedly reduced basement levels to about 2 pCi/L, with suctions of about 0.005 to 0.01 in. WG under the slab.

In the second Pennsylvania house (House PA2), where the system drew suction directly on the sump, passive operation reduced basement levels from 5 pCi/L to 1.5 pCi/L, again based upon 1-week measurements (Br91a).

In addition to these recent research results, one mitigator has reported occasionally obtaining moderate reductions applying passive SMD commercially in about 20 crawl-space houses, reportedly reducing indoor levels from 8 pCi/L down to below 3 pCi/L in "pure" crawl spaces with poured concrete foundation walls (Kl92). In these particular installations, the membrane was sealed well, with a length of perforated piping beneath. The passive "stack" from the sub-membrane piping penetrated the crawl-space band joist and exhausted at grade level. This type of stack forfeits the passive suction that would be developed by the thermal stack effect, since the stack does not rise through the heated space. Rather, it relies upon wind-induced natural suction and on the pressure break mechanism, along with any reduction resulting purely from the sealing of a membrane over the crawl-space floor.

Passive soil depressurization systems have also been tested in a number of earlier remedial efforts in the U.S. and Canada (Vi79, Ar82, Ta85).

Reference Ar82 summarizes results from passive systems that were retrofit into a number of existing Canadian and U.S. houses contaminated with uranium mill tailings. Radon reductions of 70 to 90% were reported in many of these houses. However, the interpretation of these reductions, in terms of the actual performance of the passive system, is complicated by the fact that the reported reductions often also include the effects of other mitigation measures that were implemented simultaneously. These other measures included removal of mill tailing source material from under the slab, and various sealing efforts such as trapping of floor drains. An additional limitation is that the pre- and post-mitigation radon and working level measurements were likely obtained by multiple grab samples in many of the cases, thus providing a less rigorous measure of system performance.

In another project involving new residential construction in uranium mining and processing communities in Canada (Vi79), very extensive sub-slab perforated piping networks were installed beneath the slabs of a number of houses during construction, apparently in a good bed of aggregate. In 18 of these houses, a vertical stack extended from this network up through the interior of the house to the roof. Passive depressurization of the networks in these 18 houses reportedly gave satisfactory reductions during the winter, maintaining indoor levels at 0.02 WL and less. However, during mild weather, when the thermal contribution to the natural suction in the stack would be reduced or eliminated, performance of the passive systems reportedly degraded. As a result, based upon multiple grab sample measurements, ten of the houses averaged above 0.02 WL over the entire measurement period, despite the extensive piping network. Under these conditions, the systems had to be activated; each of the 18 houses averaged below 0.015 WL after activation.

A major effort was made to retrofit a passive system into one existing house having a very high source term (resulting from naturally occurring radium in the underlying soil and rock) and having block foundation walls (Ta85). The existing slabs for both the basement and the adjoining slab below grade in this house were torn out. Some of the underlying soil and rock was removed, and replaced with aggregate. Loops of perforated drain tile were placed around the perimeter of each slab, and beside the footings for an interior load-bearing wall in the basement. Each loop connected to a passive stack which rose through the house to the roof. The slabs were re-poured, with efforts to make the slabs as tight as possible. Based upon periodic grab samples over a several-month period after mitigation, the radon levels were reportedly reduced by greater than 99%, from about 13.5 WL before mitigation to below 0.02 WL. One significant spike (to 1 WL) was measured during one of the grab sampling campaigns, and a small fan was installed in each of the vent stacks to boost suction, bringing concentrations back down to acceptable levels. The fan on one of the two vent stacks is still operated frequently by the homeowner. Grab samples do not reveal the variations in radon levels, or the average levels, that exist between sampling campaigns.

In summary, the available results with passive soil depressurization systems suggest that

- Passive SSD or DTD systems have commonly been shown to give moderate indoor radon reductions, sometimes as high as 70 to 90% if sub-slab communication is good and the slab is tight. However, passive performance is not predictable, and may vary with time.

- A given soil depressurization system in a given house always gives much higher reductions when operated in the active mode, with a fan, than when operated passively.

- Good sub-slab communication is mandatory for good passive SSD or DTD performance. However, good communication is not sufficient by itself to ensure good performance.

US EPA ARCHIVE DOCUMENT

- Passive SSD and DTD have often provided their best reductions in new construction where steps have been taken to tighten the slab during construction (e.g., caulking the wall/floor joint). Such slab tightening should be conducted in new houses if it is desired to improve the chances that a passive system will perform well. However, there are no definitive results quantifying the benefits of such slab sealing.

- Best results with passive SSD or DTD systems have consistently been obtained where the foundation wall is poured concrete, rather than hollow block.

Because of the apparent limitations and uncertainties in the performance of passive systems, the discussion of system design and installation in the subsequent sections will focus on active systems. However, much of the information on design and installation of active systems can be readily adapted for use with passive systems, with the guidance given above.

US EPA ARCHIVE DOCUMENT

US EPA ARCHIVE DOCUMENT

Section 3
Pre-Mitigation Diagnostic Test Procedures for Soil Depressurization Systems

3.1 General

3.1.1 Purposes of Pre-Mitigation Diagnostics

The primary purposes of diagnostic testing prior to the design and installation of a radon reduction system are to:

a) improve the radon reduction performance of the system ultimately installed; and

b) reduce the cost to the homeowner of achieving a given level of radon reduction.

If the diagnostic testing does not have a reasonable likelihood of improving performance and/or reducing costs, there is no purpose in conducting it.

Pre-mitigation diagnostics can be used to help select which mitigation technology can best be applied in a specific situation (e.g., whether basement pressurization or a house ventilation approach might be more suitable than ASD). Once the decision is made to install an ASD system, the diagnostics can aid in the design of the ASD system.

3.1.2 Diagnostic Tests That Can Be Considered

Once a mitigator is familiar with the housing characteristics in his/her area, and the way in which these characteristics influence radon entry and the performance of ASD (and other) systems, it will often be possible to select and design an ASD system with a minimum of pre-mitigation diagnostics.

A pre-installation visual inspection will be the one diagnostic that will generally be required prior to final selection and design of the system in all cases. In many cases, this will be the only pre-mitigation diagnostic test necessary. In cases where the sub-slab communication is poor, uneven, or uncertain, sub-slab suction field extension testing may sometimes be cost-effective, using a vacuum cleaner or a portable ASD fan test stand to generate the suction field, in order to facilitate efficient determination of where suction pipes should be located. Especially where suction field diagnostics are needed, grab sampling (or "sniffing") to determine radon concentrations at locations under the slab or around potential soil gas entry routes may sometimes be helpful in selecting suction locations.

Most mitigators will rarely have to utilize pre-mitigation diagnostic tests other than those listed in the preceding paragraph, except in special cases.

A more complete summary of the diagnostics that can be considered, and the cases under which they might be useful, is given below. They are listed in the approximate order of frequency with which they might be used. While the discussion here focuses on their use as *pre*-mitigation diagnostics, some of them can sometimes be used *during* mitigation or *after* mitigation (see Section 11).

- ***Visual inspection.*** This "diagnostic test", in one form or another, will be required prior to mitigation in every house. Most major questions, such as whether a house is a suitable candidate for ASD (or for other techniques), whether the house will be relatively simple or relatively difficult to mitigate, where suction pipes might be located and how the exhaust piping might be routed, etc., can be at least partially addressed by the visual inspection, without any measurements.

- ***Suction field extension.*** This is the second most common diagnostic technique for ASD systems, after visual inspection. It is necessary only if: a) the visual inspection and the mitigator's prior experience do not provide sufficient basis for a reasonable judgement regarding the likely sub-slab communication; or b) inspection and/or prior experience suggest that communication will be poor or uneven, but do not suggest the logical number and location of SSD suction pipes. A relatively simple measurement of sub-slab depressurizations created at a few remote test holes by an industrial vacuum cleaner can help confirm whether a house has relatively good or relatively poor communication. A more complex test procedure, involving a greater number of test holes, would better quantify how far the suction field from a single SSD pipe might extend, and where discontinuities in communication exist, to aid in a more rigorous selection of pipe number and location.

  Rather than a vacuum cleaner, some mitigators might elect to use a portable ASD fan test stand to generate the suction field. The portable ASD fan would give a more rigorous and easily-interpreted indication of how far the eventual system suction field will extend, and of the flows that can be expected, compared to a vacuum cleaner. Where the flexibility exists, some professionals sometimes use an ASD fan mounted on the initial suction pipe

US EPA ARCHIVE DOCUMENT

installed through the slab during installation, proceeding on a "design-as-you-install" basis. Suction field extension testing is also common as a post-mitigation diagnostic tool (with the ASD system operating), to assess why an installed system is not providing the desired performance.

- ***Sub-slab flows.*** As an extension of the suction field extension test, one could measure the flows developed in the vacuum cleaner nozzle (or in the piping to the portable fan test stand) at various suctions induced by the vacuum under the slab. The results could help quantify the preferred performance curve for the fan to be installed on the ASD system.

  Such sub-slab flow measurements will probably not be necessary for many mitigators in most houses. An assessment of whether a standard moderate-suction/high-flow fan will be appropriate, or whether a high-suction/low-flow fan would be preferred in a given house, can generally be made based upon the mitigator's experience and the suction field extension results, without the more rigorous sub-slab flow measurement at multiple suctions. At most, if suction field extension tests are being performed, a mitigator might measure the flow in the vacuum cleaner at the one suction used for that testing, to determine whether the sub-slab flows are high or low. If the diagnostic vacuum cleaner is not set up to enable flow measurements, some researchers suggest simply listening to the sound of the vacuum motor as a qualitative indicator of whether it is moving a lot of air, or only a little (Br91b, Bro92).

- ***Radon grab sampling and "sniffing."*** "Measurement of radon concentrations near potential entry routes—e.g., under the slab near slab cracks and openings, or inside hollow-block foundation walls—can suggest the relative importance of these potential entry routes, and thus can help guide ASD design. For example, especially where sub-slab communication is not good, SSD pipes might be located toward those cracks/ openings having the highest sub-slab concentrations. Block walls having high radon levels in the cavities would be those most likely to warrant a BWD component complementing the SSD system. Such grab sampling will likely be of value primarily when sub-slab communication is not good, or when the radon levels in the soil gas are very high, and when the location of the ASD suction pipes thus becomes of increased importance. Poor-communication houses are the houses where sub-slab suction field extension measurements are most likely to be helpful, in which case test holes would be being drilled through the slab for suction field testing; it would make sense to expand the suction field measurements to include grab sampling through the slab holes, and through utility openings in the block walls.

- ***Well water radon analysis.*** If it is suspected from experience in the mitigator's service area that radon in well water might be a significant contributor to the indoor radon levels, and if the homeowner has not had a water measurement conducted, it can be desirable to conduct a water measurement. This measurement would permit a realistic assessment of how much airborne radon is likely being contributed by the well water, recognizing that an ASD system could not address the water-related contribution to the indoor air levels. Mitigators working primarily in houses served by municipal water supplies, or in areas where well water radon concentrations are typically low, would rarely (if ever) find it necessary to make water measurements. Mitigators working in areas where very high concentrations of radon in water sometimes occur might want to have a water measurement made, if the homeowner has not already done so, before guaranteeing that a post-mitigation level of 4 pCi/L will be achieved with an ASD system alone.

  A gamma measurement against the well water pressure tank, against the water piping, or at a toilet bowl, is a simple screening measurement that can be made to suggest whether a more rigorous water analysis is warranted.

- ***Flux measurements or gamma measurements.*** Measurements of radon flux from interior building surfaces (or, more conveniently, measurements of gamma radiation near the surfaces, if a gamma meter is available) are needed only in cases where there is reason to suspect that building materials may be an important contributor to indoor radon levels. These measurements would qualitatively indicate whether the building materials might be an important radon source, thus limiting the effectiveness of ASD (which can only address the soil gas source). Most mitigators will rarely, if ever, have the need to conduct these diagnostics. Building materials will be a significant contributor only in unusual cases where, e.g., uranium mill tailings, or natural materials with very high radium contents, have been used as fill around the house or as aggregate in the concrete. Unless there is some basis for suspecting building materials to be a source, flux or gamma measurements would more likely be conducted as post-mitigation trouble-shooting diagnostics, to determine why radon levels are still elevated, rather than as pre-mitigation diagnostics.

- ***Pressure differential measurements across the house shell*** (above or below grade). Sometimes, usually for research purposes, pressure measurements are made between indoors and outdoors above grade. Such measurements will rarely be useful in designing commercial installations, except in assessing the threat of combustion appliance back-drafting. In addition, pressure measurements can be made across the slab (with no suction being drawn under the slab). These below-grade measurements are conducted in conjunction with the suction field extension testing discussed earlier.

  Pressure differential measurements might be used to aid in interpreting sub-slab suction field extension test data. They could indicate whether the existing driving force during the suction field diagnostics were much less than the estimated maximum driving force that would be expected during cold weather with exhaust appliances operating. If the existing driving force during the diagnostics were much less than the estimated expected maxi-

mum, the additional sub-slab depressurizations needed to compensate for the higher driving forces could then be factored into the ASD design. Pressure differential measurements across the shell could also be used to assess house depressurization with various house appliances in operation (e.g., a central furnace fan or a whole-house exhaust fan), or under different weather conditions, in an effort to quantify the actual maximum driving forces that might exist in a particular house (rather than relying on the conservative rule-of-thumb values, 0.025 to 0.035 in. WG for combined thermal and exhaust appliance effects).

For the above purposes, the preferred pressure differential to measure is that across the slab, between the house and the sub-slab region (with the sub-slab vacuum off). That is the differential against which the ASD system will have to compete. The pressure differential between indoors and outdoors above grade will normally tend to be slightly greater than that across the slab. Where a mitigator plans to conduct sub-slab suction field extension diagnostics anyway, it makes sense to include pressure measurements across the slab with the vacuum off, to aid in data interpretation. Most mitigators never make pre-mitigation indoor-outdoor pressure differential measurements *above grade* to aid in interpreting sub-slab suction field extension diagnostics.

The pressure differential across the shell above grade is sometimes measured as an indicator of whether the house might be prone to back-drafting of combustion appliances. If the house is depressurized relative to outdoors by a certain amount during cold weather prior to mitigation—e.g., by 0.02 in. WG or more, according to some references (CMHC88, TEC92)—then there is a threat of back-drafting that could be exacerbated by an ASD system. Many mitigators use diagnostic approaches other than pressure measurements across the shell above grade to assess the risk of back-drafting. Since many mitigators conduct back-drafting tests as a *post*-mitigation diagnostic, tests aimed at identifying back-drafting are discussed in Section 11.

- ***Blower door testing.*** A blower door is a calibrated fan which can temporarily be mounted in the doorway of a house, either blowing house air out or blowing outdoor air in. From measurements of the fan flows required to maintain various pressure differentials across the house shell, one can calculate the effective leakage area between the house and outdoors. This type of information is generally not necessary for the design of an ASD system. Thus, in the large majority of houses where a mitigator can tell immediately that ASD is the mitigation technique of choice, blower door testing will not be conducted.

  Blower door testing will be considered only in those houses where house ventilation techniques or basement pressurization appear to be candidates, because the house in not amenable to ASD for some reasons (poor communication, high finish, complex substructure, fieldstone foundation walls, etc.). The house leakage area can be used to estimate natural ventilation rates, which can be used, say, to select the capacity (or to estimate the effectiveness) of an air-to-air heat exchanger. The blower door flows required to maintain a given basement pressurization would suggest the practicality of (and the required fan size for) a basement pressurization system. This information could aid in the decision of whether to force-fit an ASD system into a non-amenable house, or to try a house ventilation or basement pressurization approach.

  Even where a house in not amenable to ASD, blower door testing will not always be necessary to aid in evaluation these other approaches. For example, a house with pre-mitigation levels above 10 to 15 pCi/L will generally not be reduced below 4 pCi/L with a typically sized air-to-air heat exchanger, since 200 cfm units would generally be expected to provided no more that perhaps 50 to 75% radon reduction (EPA88a). Thus, blower door diagnostics would not be needed to assess the potential for using an air-to-air heat exchanger in a house having very high pre-mitigation levels. As another example, houses with open stairwells or other significant openings between the basement and upstairs would not be able to achieve adequate basement pressurization without high flows, which would likely create an unacceptable heating/cooling penalty and unacceptable drafts. No blower door testing would be necessary to rule out basement pressurization in those types of houses.

- ***Tracer gas testing.*** Various tracer gases have sometimes been used for various purposes associated with radon mitigation work, usually in research applications. Tracer gas measurements would almost never be used by a commercial mitigator, especially not as a pre-mitigation diagnostic tool.

  Sulfur hexafluoride (SF_6) and perfluorocarbon (PFT) tracers are commonly used to measure house ventilation rate. House ventilation information is not necessary for the design of an ASD system, as discussed previously; thus, these tracer measurements would not be needed whenever it is immediately apparent that ASD is the system of choice. Where ventilation information would be useful to assess house ventilation and basement pressurization options, blower door testing would generally be the approach of choice to obtain that information. The equipment and level of effort needed to make SF_6 measurements are unrealistic for use in anything other than a research setting. PFTs are relatively simple to use, but even in this case, the costs of the PFT analysis, and the time that would be required on the part of the mitigator to deploy and retrieve the PFT emitters and detectors, would not be practical in most commercial mitigation settings.

  In previous research projects, halogenated hydrocarbons have sometimes been used as tracer gases for qualitative diagnostics. Halogenated hydrocarbons marketed under trade names such as Freon® and Genetron® are widely used as refrigerants as well as blowing agents, cleaning agents, and fire extinguishing materials. They were attractive for use as tracer gases because they are widely available (e.g., through the refrigeration and

US EPA ARCHIVE DOCUMENT

US EPA ARCHIVE DOCUMENT

air-conditioning industry), and portable detectors for the gases are relatively inexpensive and simple to use.

Among the pre-mitigation tests that individual mitigators have conducted with halogenated hydrocarbons have been: a) injection of the tracer beneath an adjoining slab on grade, and detection of the tracer in the exhaust from a vacuum cleaner drawing suction beneath the basement slab, in an effort to better determine whether suction drawn beneath the basement slab would extend to the adjoining slab; and b) injection of the tracer into a drain tile entering a sump, and detection of the tracer in the exhaust from a vacuum cleaner drawing suction on a second drain tile entering the sump, in an effort to determine if the tiles form a complete loop.

However, EPA no longer recommends the use of most halogenated hydrocarbons for radon mitigation diagnostics, due to global concerns about stratospheric ozone depletion. The original chlorofluorocarbon (CFC) refrigerants, such as R-12, are particularly damaging to the ozone layer; more recent, so-called "transition" refrigerants—hydrochlorofluorocarbons (HCFCs), such as R-22—are less damaging. The venting of either of these classes of compounds by the refrigeration industry is banned by the Clean Air Act Amendments of 1990. Although this venting ban does not explicitly preclude the release of CFCs and HCFCs in small quantities in connection with radon mitigation diagnostics, the use of these gases for diagnostics would seem inappropriate.

Advanced refrigerants—hydrofluorocarbons (HFCs), such as R-134a—do not contribute to ozone depletion, and their venting by the refrigeration industry is not currently banned. Thus, they are the one refrigerant gas that might still be considered for diagnostic use.

Concerns about the environmental impacts of halogenated hydrocarbons aside, most mitigators will probably find it technically unnecessary to conduct diagnostics using these gases in commercial application. Sufficient information for ASD design will probably be obtained from prior experience and from the visual inspection (as well as from sub-slab suction field measurements, if needed), without the use of these gases.

The following subsections address specific procedures for conducting those diagnostics which are most commonly useful to mitigators, along with discussion of how the results of the diagnostic testing can be used in ASD design. Further discussion of how the results can be used will be presented in Sections 4 through 8.

3.2 Procedures for the Visual Survey

Some type of visual survey will be required in every house prior to installation, to confirm that ASD is the appropriate mitigation technology for the house, and to determine the basic design of the ASD system. The visual survey, together with the mitigator's prior experience with houses in the area, will often be all the diagnostics that are required for effective design of an ASD system.

There will be two general components to a visual survey. One component will be an interview with the homeowner, to determine homeowner expectations and house usage patterns. If the homeowner saw the house under construction or during remodelling, the homeowner interview may also provide important building construction information (such as the presence of sub-slab aggregate) that might not be apparent during the mitigator's visit. The second component of the visual survey will be an inspection to identify house characteristics which could influence system design.

Some portion of the "visual survey" might in fact be conducted over the telephone. However, in no case could all of the necessary detail be obtained without an actual visit to the house.

A number of house survey forms have been proposed to aid in the conduct of the visual inspection (EPA88a, EPA88b, Tu88b, Fo90, among others). One simple form is presented in Figure 8.

Every form that has been proposed includes some items that some mitigators will not really need at least some of the time. The purpose of the forms is to provide a systematic method to help an investigator ensure that key items will not be overlooked during the survey. Because information that may be important to one mitigator in one house may not be important to another mitigator in another house, even the most practically oriented general form will always have some entries that some mitigators will find unnecessary for system design.

The discussion below reviews the type of information that mitigators should always collect, and why it is needed, irrespective of the specific survey form that is used.

- ***Pre-mitigation radon measurement results.*** In most cases, the mitigator will not be responsible for conducting the pre-mitigation measurements of indoor radon concentrations. However, in order to properly select and design the mitigation system, the mitigator must find out from the homeowner what the pre-mitigation levels are, and what the measurement method and measurement conditions were. For example, a high pre-mitigation concentration would rule out house ventilation as a candidate mitigation technique; the large increase that would be required in ventilation rate would likely result in unacceptable energy costs and discomfort, and would be beyond the increase in ventilation that could realistically be achieved by air-to-air heat exchangers. Very high levels could be suggesting a very high source term, suggesting the possibility of high radon concentrations in the ASD exhaust and hence the need for extra care in designing the exhaust configuration.

  To properly interpret these results, the mitigator must know enough about how the measurements were conducted to be able to make a reasonable judgement regarding how representative the results are of annual averages in the house. The type of information needed would

RADON MITIGATION PROJECT RECORD
Pre-Mitigation Visual Survey

CONTRACTOR DATA

*Contractor Name*_____ *RCPP I.D.*_____
*Company Affiliation*_____ *Phone No.*_____
*P. O. Box or Street Address*_____
*City*_____ *State*_____ *ZIP Code*_____

PROJECT DATA

*Client or Agent Name*_____
*Site Address*_____
*City*_____ *State*_____ *ZIP Code*_____

PRE-MITIGATION RADON MEASUREMENTS

*Type of Monitor*_____ *Location of Monitor*_____
*Starting Date of Test*_____ *Test Duration*_____
*Test Results*_____
Test Conducted:
❑ *by a RMP contractor (list company name)*_____
❑ *by the client in accordance with EPA Measurement Protocols*_____
❑ *under unknown conditions*
*Comments*_____

HOUSE DESCRIPTION

Foundation Type(s)
❑ *Basement* ❑ *Slab on Grade* ❑ *Crawl Space*
❑ *Combination (Describe)* _____

Foundation Walls
❑ *Concrete* ❑ *Block* ❑ *Stone* ❑ *Wood*
❑ *Other (Describe)*_____

Houses built on slabs

Basement or Slab-on-Grade Floor
❑ *Concrete* ❑ *Exposed earth* ❑ *Wood* *Other*_____
Sub-Slab Material (for houses with slabs)
❑ *Aggregate* ❑ *Soil (type)*_____ ❑ *Unknown*
*Apparent Sub-Slab Obstructions*_____
*Slab/Wall Openings Which Could Affect ASD Design*_____
*Drainage System (Sump, Drain Tiles)*_____

(continued)

Figure 8. Example of a visual survey form.

Houses built over crawl spaces

Crawl-Space Floor

❑ *Exposed Earth* ❑ *Gravel Over Earth* ❑ *Vapor Barrier Over Earth*

❑ *Concrete or concrete wash* ❑ *Other*_____

Accessibility of Crawl Space:

*Access Door*_____ *Headroom*_____

*Obstructions in Crawl Space*_____

Stories Above Grade or Basement

❑ *one* ❑ *two* ❑ *three* *Comment*_____

Attic Space: ❑ *yes* ❑ *no*

*Other comments about house substructure/design*_____

_____

*Heating/cooling system (Describe fuel type, equipment, distribution system)*_____

_____

_____

*Possible sources of significant house depressurization (e.g., attic fan)*_____

_____

Features Suggesting Mitigation Approaches Other Than ASD

Water Supply: ❑ *Private Well* ❑ *Public Well* ❑ *Public Surface Water System*

*Any reason to expect building materials may be a source)*_____

*Any features suggesting that basement pressurization should be considered)*_____

_____

*Any features suggesting that house ventilation should be considered)*_____

_____

*Any features suggesting that crawl-space depressurization (or other crawl-space treatment, other than SMD) should be considered)*_____

Sketch the envisioned mitigation system, showing:

- *House features which will affect ASD suction pipe location, such as slab or crawl-space floor dimensions, finish or other above-grade obstructions, sub-slab obstructions, or accessibility.*
- *House features which will affect ASD exhaust pipe routing, including interior (and/or exterior) finish and obstructions.*
- *Any sealing steps that will be necessary.*
- *Other steps, required to make mitigation systems other than ASD work.*
- *All important components of the mitigation system.*

*Form completed by:*_____

*RCPP I.D.*_____

*Date:*_____

Figure 8. (continued)

US EPA ARCHIVE DOCUMENT

include: the type of measurement device that was used; the duration of the measurement; the general climatic conditions during the test; where the measurement was made (e.g., confirming that a detector was not placed in a crawl space or sump); and the degree to which the house remained closed during the test.

- ***Factors determining which ASD variation is used.*** These factors include:

  - House substructure (basement, slab on grade, crawl space, or combination of these). The substructure will determine whether SSD, SMD, or a combination of techniques is used.

  - Presence or absence of a sump with visible drain tiles, or of exterior drain tiles draining to an above-grade discharge (along with the apparent or reported completeness of the drain tile loop). The presence of these features will determine whether sump/DTD or DTD/remote discharge are options.

  - Nature of the foundation wall (poured concrete vs. hollow-block vs. fieldstone; if block, are top voids open, and is the wall otherwise very leaky?). This information would help determine whether a BWD component might be needed as a supplement to a SSD or DTD system, or (along with other information) whether BWD might be considered as a stand-alone technique.

  - Presence of a perimeter channel drain. If the baseboard-duct configuration of BWD is going to be considered, houses having perimeter channel drains would be the best candidates for this approach (especially when the basement is not finished).

- ***Factors suggesting house is not amenable to ASD, or is amenable to alternative approaches.*** These factors include:

  - Known poor sub-slab communication (from observable or homeowner-reported lack of aggregate, and from experience in other houses in the area); complex substructure (e.g., multiple wings); high degree of basement finish; and/or fieldstone foundation walls. These factors, especially in combination, could seriously complicate application of SSD, BWD, or SSD in combination with BWD or SMD.

  - A crawl space which is inaccessible or unusually cluttered, preventing application of SMD.

  - A basement which is relatively tight (no forced-air ducts, stairwell between basement and upstairs has door which can be closed, no other major openings between the basement and upstairs such as laundry chute), which would suggest the possible applicability of basement pressurization.

  - Homeowners amenable to the lifestyle required for basement pressurization to be successful (e.g., willing to keep the door closed between the basement and upstairs, acceptance of drafts and possible heating/cooling penalty that might result).

  - A crawl space which is relatively tight (e.g., no forced-air ducts, no foundation vents), suggesting the crawl-space depressurization might be an option.

  - House is served by a private well, and a high radon concentration has been measured in the well water (or there is some other basis for expecting high radon concentrations in the water). In such cases, a water treatment system might need to be considered as a supplement to ASD.

  - Underlying soil is well-drained gravelly soil, in which case soil pressurization might be considered instead of ASD.

- ***Factors which would influence the number and positioning of SSD suction pipes.*** Such factors include:

  - Aggregate observed beneath the slab through slab openings (e.g., at the bottom of sump pits, registers for sub-slab forced-air supply ducts, utility openings under bathtubs, etc.); or, aggregate reported to be present by homeowner, from observations of house during construction; or, aggregate believed to be present based upon code requirements or common construction practice in the area. Good aggregate would, of course, suggest the need for only one or two SSD pipes.

  - Slab size. Especially where sub-slab communication is suspected to be poor or uneven, a larger slab may suggest the need for additional suction pipes.

  - House floor plan, degree of floor/wall/ceiling finish, and living patterns. Suction pipes will preferentially be installed in unfinished areas (such as unfinished portions of basements, or utility rooms) or in concealed areas (such as closets). In unfinished areas, pipes would be placed out of the normal traffic patterns.

  - Homeowner plans and preferences. The owners' plans to finish a currently unfinished area, or personal preferences for aesthetic or other reasons, would influence pipe location.

  - Observed or reported sub-slab utilities (such as sewer lines and forced-air ducting) and in-slab utilities (such as heating coils built into the slab), which could limit locations where pipe penetrations can be made.

  - Exterior driveways, patios, walkways, etc., which would affect where below-grade penetrations might be made from outdoors.

  - Apparent entry routes through the slab. Such entry routes might suggest that suction pipe placement might be biased toward those entry routes in order to help ensure effective treatment. (Where the slab openings

US EPA ARCHIVE DOCUMENT

US EPA ARCHIVE DOCUMENT

are significant, location of a suction pipe *too* near such entry routes without at least partial sealing of the openings could result in significant air short-circuiting into the system.) Entry routes of concern might include: a region toward the interior of the slab where there is extensive cracking; a block structure toward the interior of the slab, which penetrates the slab and rests on footings underneath; and a perimeter block foundation wall that extends the deepest below grade in a walk-out basement.

- Observed or reported sub-slab obstructions which divide slab into segments, such as interior footings and forced-air supply or return ducts. While it will not always be necessary to ensure that a SSD suction pipe is placed in each segment of the slab if there is good aggregate, it may sometimes be necessary, and the mitigator should be aware that this problem might arise.

- Evidence of water entry into a basement through slab or wall cracks, suggesting that drainage is poor in that part of the basement and that suction pipes at that location may become blocked by water during wet weather.

- ***Factors which would influence the design of a crawl-space SMD system.*** These factors would include:

  - The size of the crawl space. Larger crawl spaces will increase membrane materials and installation cost, and would increase the likelihood that sub-membrane perforated piping or multiple suction pipes would be needed to adequately distribute suction beneath the membrane.

  - The nature of the crawl-space floor. Gravel on the floor would facilitate suction field extension under the membrane. Irregular floors, e.g., with protruding rocks, could require heavier membranes, and more effort in membrane installation.

  - The accessibility of the crawl space, including headroom and major obstructions such as forced-air heating/cooling systems. Poor access to some portions of the crawl space could increase installation costs and perhaps require design modifications which include leaving portions of the floor uncovered. (Poor access to the entire crawl space could require the use of a mitigation approach other than SMD.)

  - Expected traffic patterns in the crawl space. If particularly heavy traffic is anticipated over some significant portion of the crawl-space floor (e.g., due to the location of appliances in the crawl space), it may be necessary to place heavier membrane—in extreme cases, 45- or 60-mil sheets of EPDM™ (a rubber-like roofing membrane), or some other appropriate material—on top of (or in place of) the polyethylene membrane in the heavy-traffic areas to protect the membrane from being punctured.

- ***Factors which would influence the routing of the exhaust piping.*** These factors include:

  - The availability of a convenient route for an interior stack up through the house, through either: closets or other concealed areas on any floors above the slab or crawl space; or utility chases. The location of such a convenient exhaust route could also influence SSD pipe location.

  - Convenient access to an adjoining slab-on-grade garage, so that the exhaust stack can be routed up through the adjoining garage instead of through the house.

  - Locations where the exhaust piping can reasonably penetrate through the basement band joist, and where an exterior stack/exhaust can be installed.

  - The presence and accessibility of an attic where the fan for an interior stack can be mounted, if an interior stack is planned.

  - The nature and degree of finish in the areas through which the exhaust piping may have to pass. If an exhaust piping route cannot be identified which largely avoids finished areas, this could increase installation costs and have an aesthetic impact. The nature of the basement ceiling is one particularly important element of the finish; an unfinished or a suspended ceiling will greatly simplify horizontal piping runs, relative to a sheetrock ceiling.

  - Any obstructions (such as ducts and utility pipes) which may complicate routing, e.g., by requiring that a horizontal piping run make a vertical bend which could hinder maintaining proper pipe slope for condensate drainage purposes.

  - Any exterior finish which would influence the ability to penetrate the house shell near grade and extend a stack up the outside of the house, where an exterior stack is planned. Such finish could include, e.g., exterior brick or stone cladding at the point where the exhaust piping would penetrate the shell, or the nature of the exterior siding and roof overhang, if it is aesthetically important to box in or otherwise finish the exterior fan and stack.

- ***Factors affecting the degree of sealing required.*** Significant slab or wall openings that could require some form of closure during installation should be noted. Openings of particular importance include:

  - Wide gaps at the perimeter wall/floor joint (including, in the extreme case, a perimeter channel drain). The accessibility of this joint should also be noted, since that will significantly influence the practicality of (or the installation effort required for) closure of this gap.

  - Other major slab openings, such as sump holes, untrapped floor drains, cold joints, and utility penetrations.

- Major wall openings (in particular, open top voids in hollow-block foundation walls). This is of particular importance when a BWD component to the ASD system is anticipated.

- ***Driving forces for radon entry which could influence ASD design.*** The house design and operating features which influence radon entry driving forces will not often be that important to a mitigator when there is good sub-slab communication. Under those conditions, the sub-slab is likely to be depressurized sufficiently to withstand the depressurizations created by appliances, and the flows induced by thermal bypasses. However, where communication is marginal, general knowledge of the challenges that the system might be facing could aid in judging how conservatively the system should be designed. Features that can be noted include:

  - Appliances that can contribute to depressurization of the lower level of the house. These appliances include combustion appliances (furnaces and boilers, fireplaces, wood stoves, and water and space heaters), if these appliances burn fuel (i.e., are not electric), and if they are operated with any frequency. Depressurizing appliances also include exhaust fans (clothes driers, room exhaust fans, whole-house exhaust fans, and exhaust fans on kitchen ranges).

    Where cold-air *return* ducting is located *inside* the livable space, as is commonly the case, central forced-air furnace fans can often serve essentially as exhaust fans for that portion of the house in which the return ducting is present. This situation will exist if there are not sufficient supply registers in that portion of the house to compensate for the air withdrawn by return registers and by the leaky, low-pressure return ducting. Or, if the forced-air *supply* ducting is located *outside* the livable space (such as in the attic or garage), a similar situation could occur.

    If, in aggregate, the appliances present appear as though they might be sufficient to create significant depressurization when operating, the ASD system may warrant additional suction pipes or other measures in an effort to increase the sub-slab or sub-membrane depressurizations created by the system.

    The presence of combustion appliances, especially in basements, would also alert the mitigator to check for back-drafting if the ASD system has unusually high exhaust flows. This can be a particular problem if a BWD system is being considered.

  - Thermal bypasses, which could increase the flow of soil gas into the house through entry routes if the entry routes are not adequately depressurized by the ASD system. Major thermal bypasses include, e.g., unclosed stairwells between house stories, laundry chutes, utility chases, chases around flues, openings associated with forced-air ducts, etc. Thermal bypasses will often not be a significant concern in ASD design in most cases, but if communication is marginal and if the thermal bypasses are extensive, the mitigator may want to be somewhat more conservative in system design.

In the conduct of a visual survey, the tools most likely to be required are a flashlight, a screwdriver, and a stiff brush. The screwdriver might be used, e.g., to pry grilles off of a floor drain in order to see if it is trapped; the brush might be used to scrape away dirt and concrete wash at the wall/floor joint in order to better see the nature of the crack there. Some mitigators also utilize heatless chemical smoke devices, to enable visualization of air flows. Chemical smoke could indicate whether air flow is into the house at various openings, suggesting the possible importance of those openings; it could also be used around flues of combustion appliances, to assess whether the appliances are drafting properly or whether the house is near back-drafting conditions prior to mitigation.

One output from the visual survey will be a recommendation regarding any further diagnostic testing that is needed before the mitigation system can be designed. If no further diagnostics are found to be necessary, the final output of the visual survey will be the design of the system, as suggested by the last page of Figure 8 (the sketch of the mitigation system). The level of written detail desirable for the design depends on whether the person(s) who conducts the visual survey and the design will be on-site at the house during the actual installation, with less detail being needed if the designer is going to be present to give directions to the workmen. A floor plan of the lowest level of the house roughly to scale, showing, for example., the pipe penetrations and routing for the envisioned system, the fan location, and key house features influencing design, will generally be advisable, to help the mitigator visualize the system and determine materials requirements, and to aid in communication with the workmen and the homeowner.

3.3 Procedures for Sub-Slab Suction Field Extension Measurements

If there is not evidence of a reasonably consistent aggregate layer beneath the slab, from either the mitigator's observation or from the homeowner's experience and if the mitigator's prior experience in the area does not suggest whether the house is likely to have aggregate, then sub-slab suction field extension measurements may be advisable.

Suction field extension measurements involve generation of a suction field under the slab prior to installation of the mitigation system, and then measuring the suction field induced under the slab at test holes remote from the suction point. Commonly, this pre-mitigation suction field is generated using an industrial vacuum cleaner. Another option that has been suggested but does not appear to have been used to date is to utilize an ASD fan, mounted on a 4-in. pipe in a portable test stand, to generate the suction. Use of a fan and pipe similar to that which is to be used in the ultimate system would provide more meaningful and easy-to-interpret suction field and flow data than would a vacuum cleaner, since the vacuum cleaner motor has a much different performance curve than do ASD fans.

US EPA ARCHIVE DOCUMENT

Rather than using a portable ASD fan test stand, some mitigators use the mitigation system itself to generate the suction field, installing the first suction pipe, mounting the fan, and turning the system on. If the results show inadequate extension of the suction field, additional suction pipes are installed where needed. This approach might be viewed as *during*-mitigation, rather than *pre*-mitigation, diagnostics.

In the discussion here, it will generally be assumed that a vacuum cleaner is being used, because vacuum cleaners are commonly employed, and because more care is usually needed in the conduct of the test and the interpretation of the results when a vacuum cleaner is used. Where necessary, it will be indicated how the procedure would differ if an ASD fan rather than a vacuum cleaner were being used to generate the suction.

Suction field extension measurements can be conducted with two different approaches.

The first, qualitative approach is simply to determine whether sub-slab communication is relatively good or poor. This approach involves fewer test holes (e.g., one in each corner of the basement), and indicates whether suction is generally extending well in various directions. (It can also indicate whether system flows will be relatively low or high.) This is the approach to start with any time that communication is unknown and might be good. If this test shows that communication is good (by virtue of good sub-slab depressurizations induced by the vacuum cleaner in the slab corners), then no further diagnostics may be needed. But if the results indicate that suction field extension is marginal, poor, or uneven, more sub-slab data may be desirable to design the system. In that case, the testing can be extended to provide more quantitative results, per the second approach below, by drilling more test holes and more carefully controlling the speed of the vacuum cleaner.

The second, more quantitative approach can be useful when sub-slab communication is marginal or poor. By adjusting the vacuum to better reproduce SSD flows, and by measuring vacuum-induced sub-slab depressurizations through more test holes, a more definitive estimate can be developed regarding how far the suction field from a SSD suction pipe might extend, and thus how many SSD pipes might be needed (and where they might best be located). As discussed later, these more extensive tests with a vacuum cleaner may not predict exactly how far the suction field from a 4-in. SSD pipe will extend. Most often, the vacuum cleaner diagnostics tend to over-predict the number of SSD pipes required. Any diagnostic testing conducted using a SSD fan test stand or using the initial SSD system to generate the suction field will almost automatically reproduce SSD flows and thus almost automatically be quantitative, if a sub-slab suction pit is excavated and if the suction losses in the system piping are simulated.

The experimental setup for quantitative suction field extension testing using a vacuum cleaner is illustrated in Figure 9. The details of this configuration will be discussed later, in Section 3.3.2. This figure will also be helpful in understanding the qualitative testing approach, as well as some of the key concepts regarding suction field extension testing.

In conducting sub-slab diagnostics using a vacuum cleaner, a mitigator must be aware that the suction-vs.-flow performance curve of the vacuum cleaner will be very different from that of the ASD fan that will ultimately be installed. Thus, care must be taken in cases (such as with the quantitative approach) where it is desired to attempt to reproduce actual SSD flows and suctions using the vacuum. The approach for simulating the SSD system is to adjust the vacuum cleaner speed so that the sub-slab depressurization measured at a baseline test hole 8 to 12 inches away from the vacuum nozzle—i.e., at a point that would be in the sub-slab suction pit under a SSD pipe, were the SSD pipe to be installed where the vacuum nozzle is—is about equal to that which the SSD pipe is expected to produce in the sub-slab pit. See Figure 9. Simple theory regarding sub-slab flow dynamics predicts that if the these sub-slab depressurizations are equal, then the flows in the vacuum cleaner should nominally be the same as the flows in the SSD system, despite their very different performance curves. And under these conditions, the sub-slab depressurizations generated by the vacuum at more remote test holes will nominally be the same as those generated by a SSD system. *If the sub-slab depressurization with the vacuum at this baseline test hole is not set equal to that expected with the SSD pipe, then the flows and depressurizations generated by the vacuum will have no quantitative relationship to those that will be generated by the SSD system.*

In slabs having good aggregate, flows may be sufficiently high such that the relatively low-flow vacuum cleaner will be unable to achieve the desired suction at the baseline test hole as specified above. In these cases, the vacuum will be unable to simulate a SSD system. But in cases where aggregate is good and flows high, quantitative suction field diagnostics will be unnecessary anyway.

From a practical standpoint, some mitigators might find it more cost-effective to perform the sub-slab diagnostics *during* the installation, as mentioned earlier, when sub-slab communication is uncertain. In this case, additional suction pipes would be added as necessary if the initial pipe(s) proved unable to extend a sufficient suction field. An added advantage of proceeding in this manner is that, since the suction field is being created by the system fan, there is no concern about whether a diagnostic vacuum cleaner is properly representing the system fan. A disadvantage of this approach is that the mitigator will not know what complications may be present until installation is well underway.

If a mitigator decides to skip the pre-mitigation sub-slab diagnostics, and if the initial hole(s) drilled through the slab to install suction pipes show no aggregate or other evidence of likely poor communication, then it is advisable to proceed with during-mitigation (or post-mitigation) suction field testing, as discussed above. The cost of conducting these diagnostics while the installation crew is on site is estimated to be roughly $45 (with a standard deviation of $47) in unfinished basements (He91b, He91c). By comparison, if the crew leaves the site and depends upon a post-mitigation radon measurement to alert them that the system is not functioning as desired, this cost may increase by roughly $150, due to the time required for the crew to return to the site. Or, as another option, the mitigator might elect to simply install a second

US EPA ARCHIVE DOCUMENT

US EPA ARCHIVE DOCUMENT

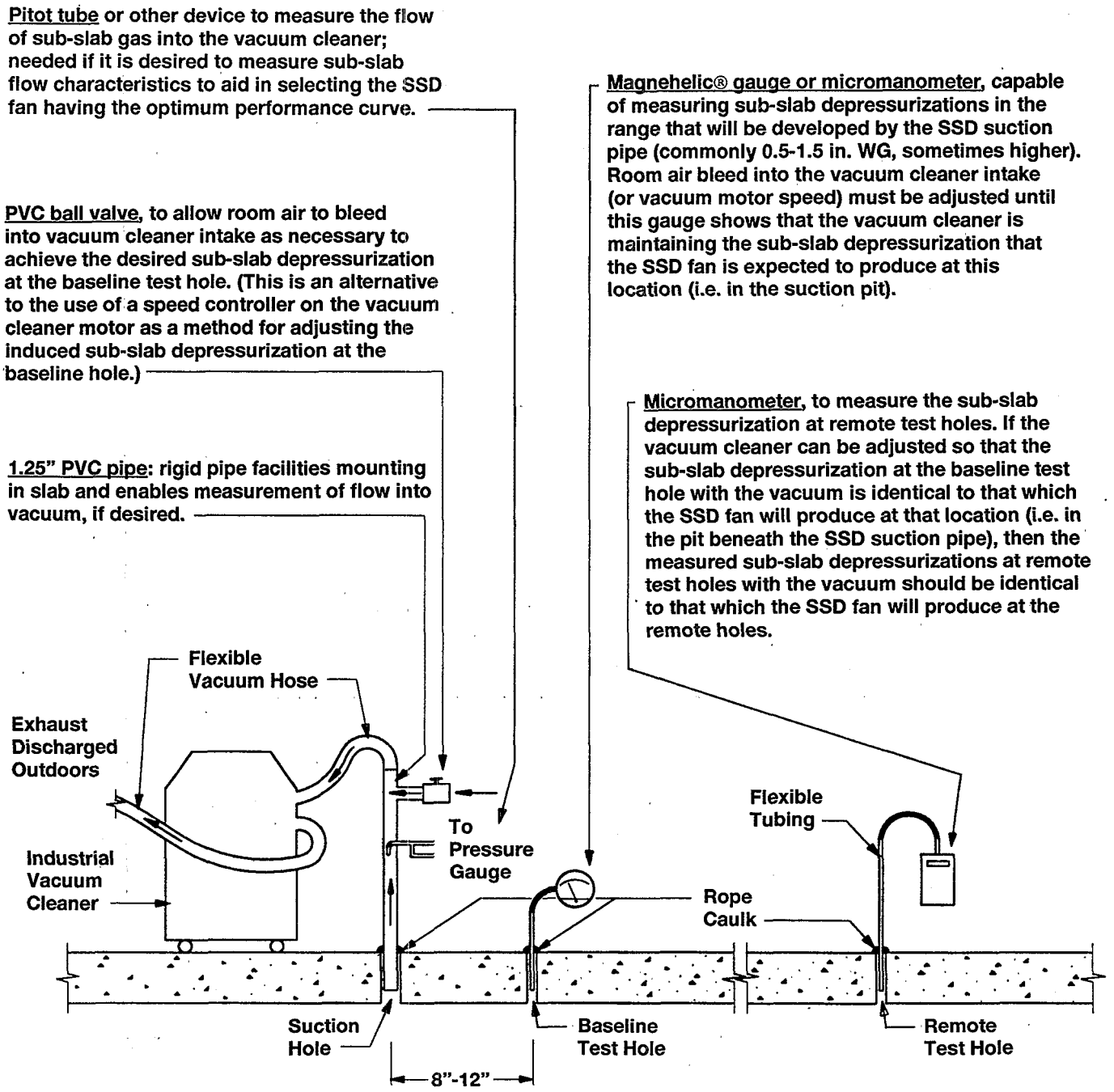

Figure 9. Experimental configuration for quantitative pre-mitigation sub-slab suction field extension and flow diagnostics using a vacuum cleaner.

suction pipe at a convenient location without spending the estimated $45 to do the diagnostics. Installation of a second pipe adds roughly $135 (standard deviation $44) to $225 (standard deviation $90) to the cost, depending upon degree of finish. It is a judgement call regarding whether it is a reasonable gamble to spend $135-$225 to install a suction pipe without first spending roughly $45 for diagnostics to see if the pipe is necessary and where it should optimally be located.

The following discussion describes the equipment and materials needed, the test procedure, and the means for interpreting/utilizing the test results, for each of the two measurement approaches.

3.3.1 Qualitative Assessment of Suction Field Extension

This suction field extension measurement approach provides a qualitative indication of whether communication is relatively good or poor, and of how uneven it may be.

US EPA ARCHIVE DOCUMENT

- *Equipment and materials required*

  - Industrial vacuum cleaner (assuming, as discussed above, that a vacuum cleaner is being used rather than an ASD fan). While units having various performance characteristics are available, typical vacuum cleaners used in diagnostics can develop suctions up to 80 in. WG at zero flow, and flows of perhaps 100 cfm at zero static pressure. (If an ASD fan were used instead of a vacuum, so that flows during the diagnostics approximated ASD system flows, this test could almost automatically become quantitative, as mentioned previously.)

  - Sufficient vacuum cleaner hose to permit the vacuum to be located outdoors during the tests, or, if the vacuum were indoors, to permit the vacuum exhaust to be routed outdoors. Directing the exhaust outdoors will avoid the discharge into the house of high-radon soil gas and of dust that is not captured by the vacuum. If the vacuum itself were outdoors, fugitive soil gas and dust escaping from the vacuum would be prevented from entering the house. The vacuum is depicted indoors in Figure 9 for convenience.

  - A suitable masonry drill for drilling holes through the concrete slab. An electric rotary hammer drill is commonly used for this purpose.

  - Drill bits for the masonry drill, including: one bit slightly larger than the nozzle of the vacuum cleaner (typically about 1.25 in. diameter), to drill the hole through which the vacuum nozzle will penetrate the slab; and one bit for the test holes (1/4- to 1/2-in. diameter).

  - Pressure sensing device, for determining sub-slab depressurizations at the remote test holes. This device can be one of the following:

    -- Preferably, a digital micromanometer as shown in Figure 9, capable of detecting pressures as low as 0.001 in. WG. This device provides a quantitative measurement. Flexible tubing of a diameter similar to that of the test hole is required to connect the micromanometer to the sub-slab through the test hole.

    -- A heatless chemical smoke device. Chemical smoke may sometimes be more sensitive than the micromanometer in detecting depressurizations, since smoke might be drawn down into the test hole at suctions below 0.001 in. WG. For qualitative assessments of suction field extension, the qualitative indication of depressurization provided by smoke sticks may sometimes be sufficient. However, the quantitative result from a micromanometer is extremely useful in telling the mitigator whether the suction field extension is marginal or strong. Another concern about the use of smoke is that the test hole will not be sealed by tubing, as with a micromanometer; when the sub-slab suction is marginal, the open test hole may be sufficient to neutralize the sub-slab depressurization at that location (Gad92).

    Thermally generated smoke (from a punk stick or cigarette) should never be used for this purpose. The natural thermally-induced rise of this smoke could mask or prevent any flow down into the hole in response to sub-slab depressurization. Also, there is a fire hazard.

  - Rope caulk or putty, to provide an air-tight seal where the vacuum cleaner nozzle and the micromanometer tubing penetrate through the slab. In addition, the rope caulk can be used to temporarily close individual test holes while measurements are being made at another hole, to prevent the measurements from being influenced by air leakage through the other holes.

  - Hydraulic cement or other non-shrinking cement, to permanently close all of the holes following testing.

  - (Optional) A pitot tube (or some other suitable device, such as an anemometer or a calibrated orifice) to determine flows in the vacuum cleaner nozzle, as shown in Figure 9. Relatively high flows in the nozzle would confirm observed good communication, and would suggest that a relatively high-flow fan is needed on the ASD system. (It could also be suggesting air leakage into the sub-slab near the vacuum cleaner, possibly explaining poor communication). Relatively low flows would tend to confirm poor communication, and possibly suggest the need for a low-flow, high-suction ASD fan. For this qualitative testing, some investigators suggest dispensing with the pitot tube, and simply judging whether the vacuum flow is high or low from the sound of the vacuum motor (Br91b).

  - Note that the Magnehelic® gauge shown in Figure 9, mounted in a baseline test hole near the vacuum nozzle, in not included on this list for the qualitative test. The additional effort involved in installing this gauge in a baseline hole, and in adjusting the vacuum to achieve the desired depressurization at that hole, is a key factor distinguishing between the qualitative and quantitative procedures.

- *Test procedure*

  - From the house floor plan, select the location for the 1.25-in. vacuum cleaner suction hole through the slab.

    -- If a SSD system is being considered, the suction hole ideally should be located at a site where a SSD suction pipe will potentially be installed. This selection not only reduces the number of places where the slab is penetrated, but also reduces the potential for differences between the diagnostic results and the actual system performance, in the event that communication varies at different locations around the slab. (Note that if an ASD fan on a 4-in. pipe is being used to generate the suction field rather than a vacuum cleaner, the 4-in. hole through the slab

would almost certainly be drilled at the site of a permanent suction pipe.)

-- The goal of locating the vacuum cleaner hole at a potential SSD pipe site means that the vacuum hole may be near the slab perimeter, especially if poor communication is suspected. Most radon entry will often be through the perimeter wall/floor joint and block foundation walls, so that it is most important to determine that the suction field is extending effectively at the perimeter. The suction hole should be at least 6 to 12 in. from the wall, to avoid the footing (EPA88b, Gad89, Br92). The vacuum hole must not be near any major slab opening. If there is a large wall/floor joint—in particular, if there is a perimeter channel drain—substantial air leakage through the perimeter joint can overwhelm the vacuum cleaner, which cannot move a lot of air (perhaps 100 cfm). In such cases, the vacuum hole should be toward the center of the slab, even if the ultimate installation may involve closure of the perimeter gap and location of SSD pipes near the perimeter.

-- In cases where SSD pipes should not be placed near the perimeter walls, such as in slab-on-grade houses in Florida, it has been suggested that the vacuum hole be located between 6 and 15 ft from exterior walls (Fo90).

-- Consistent with the selection of sites for SSD pipes, the vacuum cleaner suction hole should be in an unfinished area (such as an unfinished basement or a utility room) or in an inconspicuous area (such as a closet), acceptable to the homeowner.

-- As with SSD pipe site selection, the vacuum suction hole site should be selected in an effort to avoid sub-slab or in-slab utilities.

-- If there is a sump with a drain tile loop, and sump/DTD is the intended mitigation technique, the vacuum cleaner can draw suction at the sump, avoiding the need to drill a 1.25-in. hole through the slab.

- Select the location for the suction measurement test holes.

-- For this qualitative measurement, one test hole in each quadrant of the slab, generally toward the corners, would be appropriate. Because of the importance of suction field extension around the perimeter, location of the test holes near the walls is generally preferred, but not so close to a wide wall/floor crack that the suction field will have dropped near zero. Some investigators suggest locating the slab test holes at about the middle of each wall, about 6 in. out from the wall (EPA88b). If it is suspected that communication is good, some mitigators may wish to start with only one or two test holes, at locations the most remote from the suction hole (Gad89); by this approach, additional suction holes would be drilled only if the pressure measurements at the first hole(s) indicate that communication is not good. The holes should not be immediately beside major openings, such as perimeter channel drains, since, even with good communication, sub-slab depressurizations will have declined towards zero near such major air leakage points.

-- As with other slab holes, the test hole locations should be selected to be inconspicuous, and to avoid utility lines.

- Drill 1/4- to 1/2-in. suction test holes.

-- If initial testing is being conducted on only one or two test holes, because good communication is suspected, drill these first.

-- If the hole is being drilled through asbestos-containing floor tile over the slab, some mitigators place a wet sponge (or some other material, such as shaving cream) on top of the tile at the drilling site, to prevent asbestos fibers from becoming airborne during drilling.

-- Make sure the drill bit penetrates through the slab and any vapor barrier, into the sub-slab fill.

-- Try to assess the nature of the sub-slab fill. One approach for doing this (Bro92) is to stop the drill just after it penetrates the slab. Then, push the drill down into the sub-slab material to determine how compact it is. Turn the drill back on for a second, then pull it out and inspect the bit. If it is clean, this suggests that aggregate may be present, or that the soil under the slab may have subsided. If there is dirt on the bit, that will indicate that aggregate is not present, and will suggest the type and wetness of the soil immediately under the slab.

This information will aid in the interpretation of the suction field extension test results. If aggregate is present at all of the initial test holes, a decision may be made not to continue with the suction field extension test (depending upon prior experience with the evenness of aggregate layers in that area), avoiding the need to drill the remaining test holes or the vacuum cleaner suction hole.

-- Vacuum up the dust created by drilling, to avoid plugging of the micromanometer sampling tube (and of the grab sampler filter, if grab sampling is performed), and to permit effective sealing of the gap between the sample tube and the slab. If a sub-slab grab sample is to be drawn for a radon measurement, the vacuum should be operated as briefly as possible (for only a few seconds), to minimize any artificial reduction in the sub-slab radon level.

-- Temporarily close test holes with rope caulk.

US EPA ARCHIVE DOCUMENT

-- (Optional) If a grab sample is to be taken to determine sub-slab radon concentrations at the test holes, that sample would be taken at this time. Following the vacuuming step above, the hole should remained closed with the rope caulk for awhile before the sample is taken, to let the sub-slab concentrations re-equilibrate after possible dilution due to the drilling and vacuuming.

- Drill 1.25-in. suction hole through slab for vacuum cleaner nozzle, and insert nozzle.

  -- See comments above for drilling test holes, for cases where asbestos-containing floor tiles are covering the slab.

  -- Make certain drill bit penetrates through the slab and any vapor barrier, into the sub-slab fill.

  -- Inspect the nature of the material under the slab, as discussed above for the test holes. Again, if aggregate appears to exist everywhere, continuation of the suction field extension diagnostics is probably unnecessary.

  -- Vacuum up the dust created by the drilling, to permit effective sealing of the gap between the nozzle and the slab. Minimize operation of vacuum if it is planned to draw sub-slab grab samples for radon measurements.

  -- (Optional) Any grab sample for radon measurements would be taken at this time, if planned. See comments above in connection with the test holes.

  -- Insert the nozzle into the hole, to a depth about one half the thickness of the slab. Insertion of the nozzle all the way to the underside of the slab might result in partial blockage of the nozzle by the sub-slab fill. Tightly press rope caulk or putty around the circumference of the nozzle, at the joint between the side of the nozzle and the top of the slab. Failure to seal this gap will result in significant air leakage down through the gap, reducing suction field extension.

     The vacuum cleaner hose attached to this nozzle should be long enough to extend to the vacuum cleaner located outdoors. Alternatively, if the vacuum is in the house near the suction point, the hose on the vacuum cleaner exhaust should exhaust outdoors.

  -- If the vacuum is to draw suction on an existing sump, rather than through a hole drilled in the slab, seal a sheet of plastic over the sump, and seal the vacuum nozzle through the plastic. Alternatively, seal the vacuum nozzle into an exposed drain tile where it enters the sump, and temporarily seal the ends of any other drain tiles entering the sump.

- Place the house in the condition that will be used throughout this testing. In general, it is recommended that this condition be with exhaust appliances operating, to simulate the most challenging conditions in that particular house. If no sub-slab depressurizations are measured under those conditions, the appliances might be turned off (and perhaps windows opened), to see if some sub-slab depressurization is being achieved under non-challenging conditions.

- With the vacuum cleaner off, measure the sub-slab pressurization (or depressurization) at each test hole with the micromanometer. This will indicate the "baseline" pressure difference across the slab under the weather and appliance operation conditions existing during the tests. As discussed in Section 3.5.4, this measurement will indicate how the existing conditions compare against the expected maximum slab pressure differential (i.e., the expected maximum driving forces), and may thus aid in interpreting the results with the vacuum operating.

  -- Remove temporary rope caulk seal over each hole; replace after measurement is completed.

  -- Insert sample tube from micromanometer, to a depth about half the thickness of the slab. Press a rope caulk seal around the tubing circumference, at joint between tubing and top of slab. Failure to effectively seal this gap will result in serious measurement error.

  -- Observe reading on micromanometer. Reading will likely fluctuate somewhat, as a result of minor pressure changes inside the house due to winds, etc. Record the observed range, and/or the average.

  -- Check the zero on the micromanometer often, preferably before each reading in cases where the measured pressures are very low.

  -- If the mitigator has only a chemical smoke device, and not a micromanometer, a quantitative measure of existing pressures would not be possible, and this baseline measurement would thus be of less value. However, when the smoke testing is done during operation of the vacuum (see below), it would still be worthwhile to turn the vacuum off during the testing at each test hole, to see if these is a distinct difference in smoke flow with and without the vacuum operating.

- Measure the depressurization created beneath the slab at each test hole when the vacuum cleaner is operating. On vacuum cleaners having speed controllers, operate the vacuum at full power for this relatively qualitative test.

  -- With tape covering other test holes, insert sample tube from micro-manometer into each test hole in turn. Seal gap between the tubing and the top of the slab with rope caulk or putty.

US EPA ARCHIVE DOCUMENT

US EPA ARCHIVE DOCUMENT

-- Where communication is marginal to poor, it may take a minute, or perhaps several minutes, for the suction from the vacuum to become established, especially at remote test holes.

-- Observe the reading on the micromanometer at each hole. Record the range and/or the average of the readings. Compare these values with the values measured before the vacuum cleaner was turned on.

-- Check the zero on the micromanometer often, preferably before each reading in cases where the measured depressurizations are very low.

-- Be careful if any test holes are near the suction point. The high suctions that can sometimes exist near the vacuum cleaner when flows are low (tens of inches of water) can be high enough to damage some micromanometers.

-- If a chemical smoke device is used, release only a small quantity of smoke very near to the test hole. The smoke patterns can sometimes be obscured by air currents in the room when the pressure difference across the slab is quite small. Back-lighting the smoke with a flashlight can be helpful in seeing the smoke patterns (EPA88b).

-- If the vacuum cleaner nozzle is not fitted with a pitot tube (or other device for measuring flow), a qualitative assessment of whether the flows seem to be high or low should be noted from either the sound of the vacuum motor (Br91b, Bro92) of from the apparent velocity of the vacuum exhaust (Bro92). The sound of the motor (or the feel of the exhaust jet) at high and low flows can be determined by operating the vacuum, first with the nozzle in free air (high flow), then with the nozzle blocked (low flow).

-- (Optional) If the vacuum cleaner nozzle is fitted with a flow measurement device, the flows in the nozzle should be recorded.

- All holes that have been drilled through the slab must be permanently cemented closed after testing is complete.

• ***Interpretation of results***

- Communication is probably reasonably good and reasonably uniform if induced sub-slab depressurizations could be distinctly measured with the micro-manometer at each test hole (or the smoke flow was distinctly down into each test hole) with the vacuum cleaner operating.

-- The stronger the measured depressurizations, the more confident one can be in this result.

-- Also, if the house was probably near the maximum driving force during the testing (cold weather, exhaust appliances operating), one can be more confident in this result.

-- As an option, a mitigator might *qualitatively* compare the baseline (vacuum off) pressure differentials measured during the testing with the roughly-projected worst-case maximums for cold climates (about 0.025 to 0.035 in. WG). As a qualitative approximation, was the vacuum developing sub-slab depressurizations of the right order to potentially compensate for worst-case conditions? (See ***Note*** below.)

-- Relatively high flows in the vacuum cleaner would generally tend to support these suction field observations.

-- The confidence that communication is good is increased if aggregate was observed through the test holes.

-- If sub-slab depressurizations are marginal but flows are high, this could be indicating that communication is good but that the relatively low-flow vacuum cleaner is being overwhelmed by the available flow. In such cases, the ASD system (with perhaps double or treble the flow capacity of the vacuum) might perform well. (Marginal depressurizations and high flow could also be suggesting a leak through the slab near the vacuum.)

-- ***Note***: It is re-emphasized that, in this qualitative testing, no effort has been made to try to make the vacuum cleaner simulate an actual ASD fan. Thus, the actual sub-slab depressurizations measured with the vacuum cleaner will be different from those that will be established by the ASD system. Thus, any use of the actual sub-slab depressurizations measured with the vacuum—e.g., to assess whether they might be sufficient to compensate for worst-case house depressurization, as suggested above—can be done in only a qualitative manner.

- When communication thus appears to be reasonably good and uniform, only one or two SSD pipes will likely be sufficient, and there will be flexibility in selecting where the pipes are to be located. (Or, if a sump/DTD system is being considered, confidence is increased that the system will perform well, even if the drain tile loop is not complete.)

- If the results are inconclusive, with distinct depressurizations in some test holes, but with no (or marginal) depressurization in other holes, this may be suggesting that communication is not uniform or that the suction field is having difficulty extending to the more remote portion of the slab. In this case, the logical next step is determined based upon the mitigator's experience with other houses in the area.

-- The mitigator might elect to proceed with the installation of a one- to two-pipe SSD system, if one or

more of the following conditions exist: a) flows in the vacuum were high, and there are no nearby slab openings through which air could have been short-circuiting into the vacuum, suggesting that the vacuum cleaner was simply being overwhelmed by high flows from a sub-slab region having good communication; b) aggregate appeared to be present; c) the poor depressurizations were observed only at a few of the most remote test holes; d) the house was tested under challenging conditions (cold weather and exhaust appliances operating), so that the risk is reduced that the observed marginal depressurizations might be overwhelmed by more challenging conditions later; and e) local experience suggests that houses such as the one tested can be adequately treated by one or two pipes. Post-mitigation sub-slab suction field measurements should be performed to confirm that, in fact, the slab is being adequately treated.

  - If conditions a) through e) above are not present, the mitigator might elect to proceed with the installation, installing a conservatively-designed system (with additional suction points). Again, post-mitigation suction field measurements should be performed.

  - The mitigator might elect to proceed with the installation, conducting suction field measurements during installation. The first one or two suction pipes would be installed, the system fan turned on, and those results used to determine where any additional suction pipes should be located.

  - The mitigator might elect to conduct more quantitative communication diagnostic testing (Section 3.3.2) in order to better quantify SSD pipe requirements.

- If the results suggest poor suction field extension, with no (or only marginal) depressurizations observed in most or all of the test holes, then poor communication should be assumed. Under these conditions, the mitigator would be well advised either to conduct more quantitative suction field extension diagnostics (Section 3.3.2) prior to installation, or to proceed with the installation doing the diagnostics during installation.

  - Relatively low vacuum nozzle flows would be expected in these cases.

3.3.2 Quantitative Assessment of Suction Field Extension

As indicated above, one option when sub-slab communication appears to be marginal or poor is to proceed with quantitative suction field extension diagnostic testing. The primary distinction between quantitative and qualitative testing is that, with quantitative testing, the flows in the diagnostic system are adjusted to simulate the actual expected ASD flows. This simulation can be achieved either by adjusting a vacuum cleaner to achieve the proper depressurization at a baseline test hole 8 to 12 in. away from the vacuum nozzle; or, by using an ASD fan to draw the suction through a 4-in. pipe, including a suction pit under the pipe and simulating the expected suction losses in the ASD system piping. Another feature of quantitative testing is that, in general, more test holes are drilled at different distances from the suction pipe (rather than two to four holes at the corners of the slab).

The baseline test hole is located at a distance from the vacuum nozzle such that if it were a SSD suction pipe rather than a vacuum nozzle at that location, the baseline hole would be in the sub-slab suction pit under the pipe. If the sub-slab depressurization at the baseline test hole during vacuum cleaner operation is adjusted to equal that expected in the SSD suction pit, then, by simple fluid dynamic theory, the flow in the vacuum will nominally be the same as that in the SSD pipe, despite the fact that the vacuum motor has a very different performance curve from that of the ASD fan. And because the flows are the same, the sub-slab depressurizations at remote test holes should nominally be the same.

In many (but not all) cases where the more quantitative suction field diagnostics have been conducted, it has been found that the vacuum cleaner diagnostics over-predict the number of SSD pipes that will be required to treat the house (Ma89a, Fo90, Fi91, Si91, Sau92). A variety of possible explanations have been offered for why this occurs, including: a) failure of the diagnostician to allow enough time (sometimes several minutes or more in tight soils) for the vacuum-induced suction field to become established under the slab (Hi92); b) failure to properly adjust the vacuum cleaner flows; c) inability of a measurement at the baseline test hole to accurately reflect the suction that a SSD pipe would produce in an open pit at that location (Hi92, Sau92); d) small leaks around the sample tubing while micromanometer readings are being made at remote test holes, partially neutralizing any sub-slab depressurization that the vacuum may be producing (Hi92); and e) local inhomogeneities at the point where the vacuum nozzle is inserted (Hi92). Despite this frequent over-prediction, with proper interpretation, this diagnostic testing still can provide useful guidance regarding ASD system design. Efforts are continuing to develop better guidance on how to interpret the results of this testing, to account for its tendency to over-predict pipe requirements.

Again, the quantitative approach for suction field extension measurements needs to be considered only in cases where sub-slab communication is poor or uneven.

The basic setup for quantitative suction field extension testing using a vacuum cleaner is illustrated in Figure 9.

- ***Equipment and materials required***

  - The more quantitative suction field extension measurements require the same equipment and materials as required for the qualitative testing (Section 3.3.1), except that the chemical smoke stick is no longer an option for determining sub-slab depressurizations. The digital micromanometer, which permits quantitative determination of the suctions, is required.

US EPA ARCHIVE DOCUMENT

- A Magnehelic® gauge, with a scale extending above 1.5 in. WG, is now mandatory to monitor the sub-slab depressurization at the baseline test hole, as illustrated in Figure 9. (The suctions produced in the baseline test hole when a 90-watt fan is being simulated—often 0.2 to 1.5 in. WG—are within the upper scale of some micromanometers. However, there may sometimes be excursions to much higher suctions (up to 80 in. WG), and sometimes higher-suction fans will be simulated, perhaps 25 in. WG or higher. These suctions would damage many micromanometers, so that the micromanometer is not recommended for use at this location.)

- In addition, the vacuum cleaner must be equipped with a speed controller or other means of flow adjustment, so that flows can be adjusted to achieve the desired suction in the baseline test hole. In Figure 9, this flow adjustment is illustrated as being achieved by a valve allowing adjustment of the amount of ambient air bleeding into the vacuum intake nozzle.

• ***Test procedure***

- Select the location for one or more 1.25-in. vacuum cleaner suction holes.

  -- The criteria for site selection are similar to those for the more qualitative approach. If the qualitative suction field testing (Section 3.3.1) was conducted initially, the same suction hole can be used for this testing.

  -- Since the poor communication will likely prevent the vacuum cleaner suction from extending to portions of the slab remote from the suction hole, it may be desirable to have a second suction hole in a section of the slab remote from the first one. Testing at the second hole can serve to confirm the measurements made at the first hole, or to suggest whether communication varies in different parts of the slab.

- Select the locations for the 1/4- to 1/2-in. suction test holes.

  -- A baseline test hole must be drilled about 8 to 12 in. away from each vacuum suction hole. The ability to interpret the test results will depend upon the maintenance of the proper sub-slab depressurization at this baseline test hole. The vacuum cleaner must be operated with the depressurization at that hole being maintained at the level which a SSD fan would be able to maintain in a sub-slab pit beneath a SSD suction pipe.

  -- Several remote test holes must be drilled. Ideally, about three such test holes would be drilled—one about 3 ft from the suction hole, another about 10 ft, and a third as far from suction hole as possible—in each of two or three directions away from the suction hole. The distance of the most remote hole can be selected based upon experience regarding how far away suction from the vacuum might be expected to be detected. If the qualitative testing (Section 3.3.1) was conducted initially in the house, the test holes drilled for that testing can be utilized in the quantitative testing, if convenient.

  -- The actual locations where remote test holes can practically be sited will be determined by the finish on the slab, and the location of sub-slab utility lines and other obstructions. Figure 10 illustrates a possible scenario for locating suction and test holes on a fully finished slab, by drilling the holes in the corners of closets, under carpeting, and in available unfinished areas.

- Drill the suction hole and the test holes, to the extent that these holes were not already drilled during prior qualitative suction field testing.

  -- (Optional) If a grab sample is to be taken to determine sub-slab radon concentrations at the test holes, that sample would be taken at this time, after a brief vacuuming to remove dust. Preferably, the hole should remain closed with rope caulk for awhile before sampling to permit re-equilibration of sub-slab

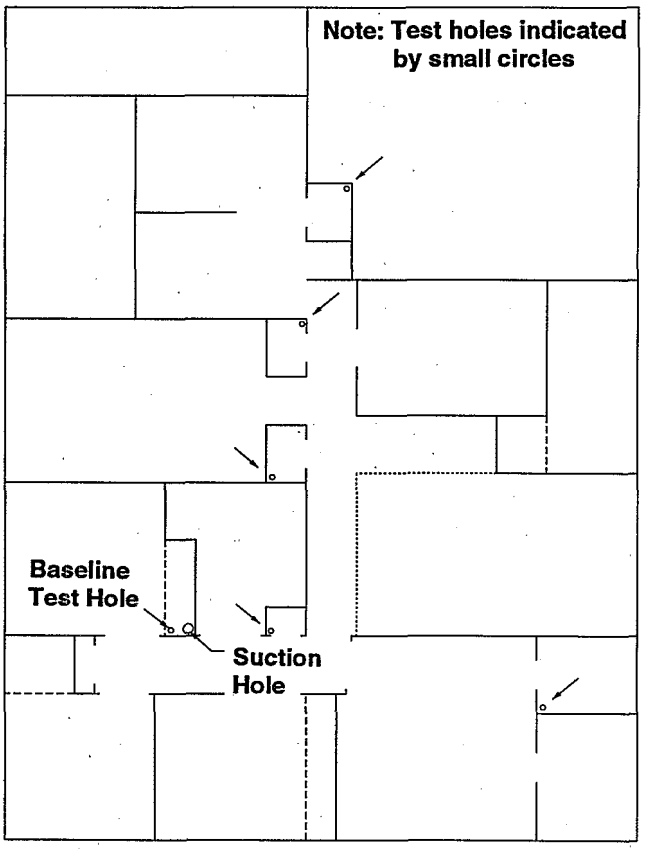

Figure 10. Example of siting vacuum cleaner suction hole and sub-slab suction test holes for quantitative suction field extension testing, when slab is fully finished.

US EPA ARCHIVE DOCUMENT

concentrations. See the related discussion in Section 3.3.1.

-- Vacuum the holes carefully to remove dust and drilling debris that may block the holes.

-- Inspect the nature of the sub-slab material, possibly using the drill bit, to aid in the interpretation of the results, as discussed in Section 3.3.1.

-- Seal the vacuum cleaner nozzle into the suction hole, using rope caulk or putty to close the gap between the nozzle and the top of the slab. The nozzle should extend down about half the thickness of the slab.

-- Insert the sample tube from the Magnehelic gauge into the baseline test hole, extending the tube down about half the thickness of the slab. Seal the sample tube into the hole using rope caulk to close the gap between the tubing and the top of the slab.

-- Temporarily close the test holes with rope caulk.

- Place the house in the condition that will be used throughout this testing. It is recommended that this condition be with exhaust appliances operating, to simulate challenging conditions. If no sub-slab depressurizations are measured under these conditions, the appliances might be turned off (and perhaps windows opened) to determine performance under less challenging conditions (see Section 3.3.1).

- With the vacuum cleaner off, measure the sub-slab pressurization (or depressurization) at each test hole with the micromanometer, to determine the "baseline" pressure difference across the slab under the weather and appliance conditions existing during the test. See procedure for this measurement described in Section 3.3.1. This baseline measurement will indicate how the existing conditions compare against the expected maximum slab pressure differential, and may thus aid in interpreting the results with the vacuum operating (see Section 3.5.4).

- Turn on the vacuum cleaner, and adjust the speed controller so that the sub-slab depressurization measured by the Magnehelic gauge at the baseline test hole is approximately that which is expected to exist in the sub-slab suction pit beneath a SSD pipe when the intended SSD fan is operating. This step is critical in achieving quantitative results.

  -- With the standard 90-watt ASD fans in relatively low-flow conditions, this suction will be roughly 1.5 in. WG.

  -- In higher-flow cases, with the 50- or 90-watt fans, the suction can range from roughly 0.25 to over 1 in. WG, depending on system flow.

  -- With the high-suction/low flow fans sometimes used in very poor communication cases, this suction can be several inches of water.

  -- If the vacuum is unable to develop these desired suctions, and if there are no nearby slab openings through which air might be short-circuiting into the vacuum, this result suggests that sub-slab flows are high. While the vacuum will thus not be able to quantitatively simulate the ASD system, the result suggests that sub-slab communication is good and quantitative diagnostics may thus not be necessary.

  -- *Note*: If an ASD fan mounted on a 4-in. pipe is being used to develop the suction field, rather than a vacuum cleaner, then the suction field will automatically reflect that which would be generated by a SSD system. In that case, no baseline test hole would be needed, and no effort will be required to control the depressurization there. This would be the case *if*: a) a sub-slab suction pit has been excavated under the 4-in. pipe; and b) the diagnostic fan system has been designed to simulate the suction losses in mitigation system piping. If the diagnostic ASD fan is in fact the permanent fan mounted on the initial pipe of a SSD system, i.e., if "during-installation" diagnostics are being performed, as discussed earlier, then system suction losses will be simulated by definition. If a portable ASD fan test stand is being used, piping losses can be simulated by reducing fan power, or by adding piping with elbows upstream or downstream of the fan.

- (Optional) If the vacuum cleaner is fitted with a pitot tube or other flow measurement device, the flows in the vacuum nozzle should be recorded as the suctions at the baseline hole are adjusted. These flow measurements would comprise the sub-slab flow diagnostics discussed in Section 3.5.1. From the sub-slab depressurization data at the baseline hole, and from the flow data, a mitigator can judge what kind of fan will be needed and roughly what suction it will maintain in the suction pit given observed flows. This rough assessment can be used to select the sub-slab depressurization at the baseline hole to be used for these suction field extension diagnostics. (As a minimum, if there is no pitot tube, qualitatively assess vacuum flows through the sound of the motor or the feel of the exhaust.)

- With the micromanometer, measure the depressurization created beneath the slab at the remote test holes, with the vacuum cleaner adjusted to maintain the proper depressurization at the baseline hole as selected above.

  -- With the rope caulk closing the other test holes, insert sample tube from the micromanometer into each test hole in turn, to a depth about half the thickness of the slab. Carefully seal gap between tubing and slab with rope caulk or putty. Failure to effectively seal this penetration could partially neutralize the sub-slab suction, significantly impacting

US EPA ARCHIVE DOCUMENT

US EPA ARCHIVE DOCUMENT

results when the sub-slab depressurizations are marginal to begin with.

-- If communication is poor, it may take several minutes with the vacuum cleaner operating for the suction field to become established. Where communication is marginal but not poor, the suction field may become established within 30 seconds or less. If initial measurements show unacceptably low depressurizations induced by the vacuum, and if these measurements were made before the vacuum had operated for several minutes, they should be repeated after several minutes.

-- Observe the reading on the micromanometer at each test hole. Record the range and/or average of the readings. Compare these values with the values measured before the vacuum cleaner was turned on.

-- Check the zero on the micromanometer often, preferably before each reading in cases where the measured depressurizations are very low.

-- Periodically re-check the Magnehelic gauge to ensure that proper depressurizations are being maintained at the baseline test hole.

- After testing is complete, permanently close all of the slab holes drilled for this testing using hydraulic cement or other non-shrinking cement.

• ***Interpretation of results***

- The measured depressurizations can be used to plot lines of constant sub-slab depressurization on the house floor plan. See Figure 11.

-- Since the number of test holes will be limited, and communication can vary in different directions away from the suction hole, the actual curves that can be drawn in practice will be more approximate and irregular than those shown in Figure 11.

-- As discussed previously, because the depressurization being maintained by the vacuum cleaner at the baseline test hole was about the same as that which would be maintained by a SSD fan in a sub-slab suction pit, the lines of constant depressurization in Figure 11 theoretically should be about the same as if a SSD pipe had been operating at the location of the vacuum nozzle.

- By this interpretation, the *effective suction radius* of a SSD pipe would be the distance from the baseline test hole to that constant-depressurization line where sub-slab depressurization has fallen to the "minimum acceptable" level.

-- If the house was depressurized during the diagnostic testing—if the house was closed, the weather was cold, and exhaust appliances were operating—the isobars represent depressurizations achieved

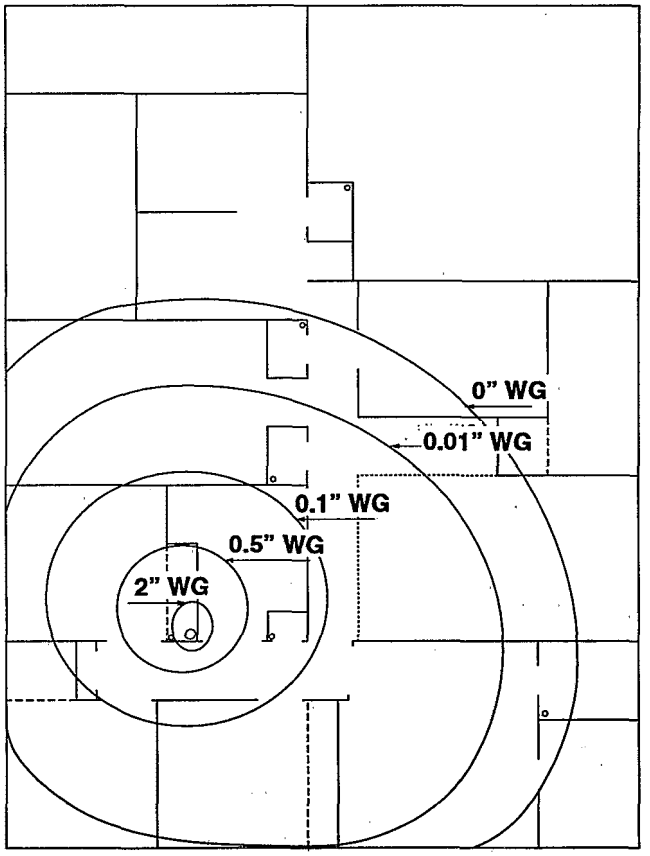

Figure 11. Example of graphical interpretation of the results from quantitative suction field extension measurements. (Adapted from Reference Fo90)

under challenging conditions. Under these conditions, the "minimum acceptable" sub-slab depressurization may be the lowest suction measurable with the micromanometer (about 0.001 in. WG), since, after installation, the ASD system will rarely see house depressurizations greater than those experienced during the testing.

-- If the house was being depressurized by operation of exhaust appliances during the diagnostic testing, but if the weather was mild, the "minimum acceptable" sub-slab depressurization should be great enough to account for the increased house depressurization that might be expected due to thermal effects in cold weather. Thermally induced depressurization will depend upon the local climate; in a two-story house in cold climates, the depressurization in the basement could be roughly 0.015 in. WG. In theory, ideally, the "minimum acceptable" sub-slab depressurization in mild weather should be about this level in cold climates.

As discussed in Section 3.5.4, review of the pressure differentials measured across the slab before the vacuum cleaner was turned on can provide some guidance regarding whether the goal under these

US EPA ARCHIVE DOCUMENT

conditions should in fact be to achieve 0.015 in. WG sub-slab depressurization with the vacuum on. Were the exhaust appliances depressurizing the house during mild weather to a degree approaching 0.025 to 0.035 in. WG, the conservatively estimated cold-weather maximum discussed in Sections 2.3.1b and 2.3.1e (perhaps due to operation of a whole-house exhaust fan that would not be operating in cold weather)? If so, the target "minimum acceptable" sub-slab depressurization with the vacuum cleaner on under these conditions could be low (around 0.001 in. WG), since the diagnostic tests were apparently being conducted under near-worst-case conditions despite the mild weather.

-- If the house was not being depressurized by operation of exhaust appliances, but if the weather was cold, the "minimum acceptable" sub-slab depressurization should be great enough to account for the increased house depressurization that might be expected due to appliance operation. As discussed in Section 2.3.1b, appliance-induced depressurizations can be as high as 0.01 to 0.02 in. WG. In theory, it would thus be logical for the "minimum acceptable" sub-slab depressurization to be about 0.01 to 0.02 in. WG under these conditions. Again, as discussed above, review of the pressure differentials across the slab with the vacuum cleaner off might provide some guidance about how closely the expected maximum house depressurizations were being approached during the testing, and thus whether the ASD system in fact needs to be designed to accommodate an increased challenge as great as 0.01 to 0.02 in. WG.

-- If the suction field diagnostics were conducted when the weather was mild and without operation of exhaust appliances, the "minimum acceptable" sub-slab depressurization would nominally equal the conservative maximum estimated house depressurization resulting from combined thermal and appliance operation effects (0.025 to 0.035 in. WG).

In practice, SSD systems tend to perform effectively with fewer pipes than would be predicted based upon the effective suction radius derived from these diagnostics. Thus, the "minimum acceptable" sub-slab depressurization used in this analysis can probably be on the low end of the values discussed above.

In addition, as discussed in Section 2.3.1e *(Climatic conditions)*, this conservative maximum basement depressurization range due to combined thermal and appliance effects (0.025 to 0.035 in. WG) would be less in mild climates, or in cases where the house was leaky or did not have some of the more common exhaust appliances (such as central furnace fans, clothes driers, and attic fans). The upper end of this conservative range assumes that major depressurizing appliances will be operating in cold weather; but in fact, among these appliances, whole-house and attic fans will not be operated then, and clothes driers will be operated only intermittently. Although this depressurization range may be conservatively high for many houses, it is used here as a conservative but reasonable design tool which can be useful as long as it is properly understood.

- Superimposing this effective suction radius onto a house floor plan, the number and location of SSD suction pipes can then be selected in an effort to ensure that all (or most) of the slab achieves the desired sub-slab depressurization.

  -- Particular attention should be placed on ensuring that the proper depressurization is achieved around the slab perimeter, and near any other locations where significant soil gas entry might be anticipated. Maintaining good depressurization is probably somewhat less important in the center of unbroken slabs.

3.4 Procedures for Radon Grab Sampling and Sniffing

In some cases, grab sampling or sniffing, to determine radon concentrations inside or near potential soil gas entry routes, may help identify the most important entry routes and may thus aid in the design of the ASD system. Examples of where such radon measurements might help include:

a) Identification of regions of unusually high radon concentrations beneath slabs. In selecting the locations for SSD pipes, pipe location might be biased toward regions where high sub-slab radon concentrations are near slab openings.

b) Identification of hollow block foundation walls having unusually high radon levels inside the cavities. A wall having a high concentration might warrant a BWD component being added to the SSD system.

c) In houses having fieldstone foundation walls, determination of radon concentrations in the chinks between the stones. High radon levels would suggest that the wall is an important entry route, and that SSD treating the slab alone may not be sufficient.

d) Identification of radon levels in floor drains or other openings, to assess their potential importance as entry routes.

e) Identification of radon levels in crawl spaces adjoining basements or slabs on grade, to assess the potential importance of the crawl space as an entry route compared to the adjoining wing.

Grab sampling/sniffing can be considered in any case where a mitigator's prior experience has suggested that it might be cost-effective, reducing the overall costs to the homeowner. Where suction field extension testing is being conducted (usually where communication is unknown or poor), grab sampling/sniffing beneath the slab is a relatively easy additional measurement to make, if the mitigator has the proper equipment.

A distinction is drawn between "grab sampling" and "sniffing." Both of these approaches involve drawing a gas sample over a very short time period—no more than five minutes, often less. The distinction between the two approaches is:

a) *Grab sampling* is a quantitative approach. Depending upon the particular grab technique, the sample is collected, allowed to age, or counted for a long enough period to permit the concentration of radon in the sample to be quantitatively determined with an acceptable sensitivity. For perhaps the most common grab sampling approach (use of an alpha scintillation cell), this period can be about four hours; the sample needs to age for about this period to ensure equilibrium between the radon gas and its decay products.

b) *Sniffing* is a less accurate, semi-quantitative approach. Measurement accuracy and sensitivity are sacrificed in order to obtain essentially immediate results, enabling rapid identification of those sampling locations which were the "hottest." In these measurements, no time is allowed for sample aging, and sample counting time is reduced to a minimum.

To the extent that such radon measurements are included in pre-mitigation diagnostic testing, sniffing will often be the preferred approach for commercial mitigators. The simplicity and reduced time requirements for sniffing will be important in keeping costs down. The improved accuracy of grab sampling will generally not be needed, in view of the anticipated qualitative use of the results.

Several techniques are available for conducting grab sampling and sniffing.

a) *Alpha scintillation cell.* This is perhaps the most common technique, and is one of three grab sampling techniques covered in EPA's measurement protocols (EPA92d). A sample is drawn into a cell having a zinc sulfide phosphor coating on its interior surfaces. As the radon and it progeny decay, the alpha particles released cause light pulses (scintillations) when they impact the phosphor; these scintillations are counted using a photomultiplier tube and scaler. In practice, an alpha-scintillation-based continuous radon monitor is often used for these measurements. For quantitative grab sampling, the sample must be aged for a sufficient period after collection (usually about four hours) to ensure that the radon and its decay products are in equilibrium. The calibration of the scintillation cell (i.e., the number of counts for each picocurie per liter) assumes that the alpha particles are being released by radon and progeny in equilibrium. For sniffing, the sample from a given sampling location is pumped through the scintillation cell continuously, and the counting is completed in a very brief period (usually within about 5 minutes or less, as discussed later). In the sniffing case, it is recognized that the sample is nowhere near equilibrium, and that the counts per minute recorded by the device thus cannot be quantitatively related to a radon concentration (except, in specific cases, via sophisticated calculations).

b) *Activated charcoal.* In another technique covered in EPA's protocols (EPA92d), a grab sample from a given location is drawn through a charcoal-filled cartridge for about an hour. The cartridge is then analyzed by placing it on a sodium iodide gamma scintillation system or a germanium gamma detector. This technique does not appear to be as widely used as is alpha scintillation. Also, because of the required sampling duration, it is not applicable for sniffing. Accordingly, it is not addressed further here.

c) *Pulsed ion chamber.* One continuous radon monitor on the market operates on the principle of detecting, using an electrometer, ion pulses generated when radon gas decays. In this device, radon decay products are constantly removed from the measurement chamber, and thus nominally do not contribute to the electrometer reading. As a result, there is no need to age the sample in order to achieve equilibrium, as is necessary with alpha scintillation cells. The manufacturer offers a pumped (flow-through) variation of this monitor with an improved electrometer that can be used for grab sampling and sniffing (Fe92). With the pump continuously drawing sample through the chamber, this device reportedly has adequate sensitivity to provide readings after 2 to 20 minutes of sampling. While the required duration will depend upon the radon concentration, it may generally be viewed that longer sampling/measurement periods will tend to give the accuracy and sensitivity associated with quantitative grab samples, while shorter periods will tend toward less accurate, more semi-quantitative sniffing samples. Although the pulsed ion chamber approach is not currently included in EPA's grab sampling protocols, it is a convenient method for grab sampling, and is utilized by a number of investigators.

d) *Ionization meter.* Another device which has been marketed to provide immediate readings of radon concentrations is based upon measurement of the total ionization existing in the air (IL90). This meter is thus distinguished from the pulsed ion chamber above, which measures ion *pulses* caused by radon decay. The accuracy and sensitivity of the ionization meter for radon grab sampling applications has not been tested by EPA, and experience with this device is very limited in the U. S. Accordingly, the ionization meter is not discussed further here.

In interpreting the results from radon grab sampling/sniffing, the mitigator must recognize that the real contribution from a potential entry route will depend, not only on the radon concentration at/in the opening, but also on the flow rate of soil gas into the house through the opening. Thus, the radon levels alone do not necessarily determine how important a potential entry route may be. An opening with a less elevated radon level but a high flow (such as an uncapped hollow-block wall) can be a more important contributor to indoor radon than one with a high radon concentration but low flow (such as a hairline slab crack). As another example, sub-slab radon concentrations may be relatively high in the central portion of an uncracked slab, but almost none of this sub-slab radon will be entering the house, since convective flow is zero and diffusion through the unbroken concrete is negligible. By contrast, the sub-slab radon concentrations near the slab pe-

US EPA ARCHIVE DOCUMENT

US EPA ARCHIVE DOCUMENT

rimeter may be lower, but flows into the house through the wall/floor joint and the block foundation walls can be relatively significant, often making the slab perimeter an important location for SSD pipes despite somewhat lower sub-slab radon concentrations there.

In research studies, more elaborate diagnostic procedures have been developed which consider potential flow as well as radon levels at slab test holes, in order to obtain a better measure of radon entry potential around the slab (Tu90). However, in commercial mitigation installations, efforts to determine flows will probably almost never be cost-effective. The logical approach is to try to "guesstimate" whether flows into the house are likely to be relatively high or low through the entry route being sampled. For sub-slab measurements through test holes in the slab, are there significant slab openings near the test hole? For concentrations inside block foundation walls, the focus should probably be on whether these levels are significantly higher than is observed in the house, and whether one wall in the house seems more elevated than the other walls. The qualitative nature of this interpretation underscores the statement above, that the more qualitative sniffer approach will likely be adequate for these measurements in many cases, and that the additional time and effort required for more accurate grab sampling may often not be warranted commercially.

The radon measurement procedures being discussed here are for diagnostic purposes only, to aid in ASD system design. As presented here, these procedures are *not* intended to determine the indoor radon concentrations in the house.

The applications of grab sampling/sniffing discussed above focus on its possible utility as a pre-mitigation diagnostic test. It may be more important as a post-mitigation diagnostic, for trouble-shooting in cases where the initial mitigation installation is not performing as expected.

The equipment and procedures listed below address the scintillation cell and the pulsed ion chamber approaches. Additional discussion of the alpha scintillation cell approach can be found in References EPA88b, Fo90, and EPA92d.

- ***Equipment and materials required*** **(alpha scintillation cell approach)**

  - Alpha scintillation cells. Either single-valve (evacuated) cells or double-valve (flow-through) cells can be used for grab sampling; flow-through cells are required for sniffing. Commonly, cells having a volume of about 100 to 300 mL are used for these diagnostics. Cells ranging from 100 mL to 2 L are available; the larger cells provide greater sensitivity, unnecessary for the purposes of mitigation diagnostics.

  - For flow-through cells, a battery-operated pump to draw gas sample into the scintillation cell. A hand-operated suction bulb could also be used to draw the gas sample. If a continuous radon monitor is used for this testing, as is usually the case, the pump associated with the monitor will be used.

  - For evacuated cells, a pump capable of evacuating the cells to at least 25 in. of mercury before use.

  - Portable photomultiplier tube and scaler to count the scintillations, with a digital display or printer to indicate counts per unit time. Most commonly, a continuous radon monitor fitted with a scintillation cell will be used in the field; this monitor will incorporate the sample pump, the photomultiplier tube, and the scaler.

  - Flexible sample tubing, to fit through the test hole and draw the sample into the scintillation cell.

  - 0.8-micron filter assembly, to be mounted in sample tubing upstream of scintillation cell, to prevent dust (e.g., from the sub-slab) from contaminating the cell. The filter will also remove radon decay products, which is important in interpreting results when short aging times are used.

  - Rope caulk, to seal the gap between the sample tubing and the face of the slab. Duct tape can also be useful when the tubing is inserted through large openings, e.g., in a block wall.

- ***Test procedure*** **(alpha scintillation cell approach)**

  - Prior to visiting house, purge the scintillation cells with outdoor air and allow to age overnight. Because these samples are for the purpose of mitigation diagnostics rather than for determining indoor radon concentrations, it is not necessary to purge the cells with aged air or nitrogen as specified in EPA's indoor measurement protocols (EPA92d). Perform a background count over a period of 2 minutes (Fo90) to 10 minutes (EPA92d) with the portable photomultiplier tube/scaler, to confirm that the background has been reduced to an acceptably low level. The background counts per minute should be less than 10% of the expected sample counts per minute. Cells which will be used for high-radon samples (e.g., from beneath the slab) can tolerate a higher background count than those that may be used for lower-level samples.

  - For sub-slab samples, gas samples will normally be drawn through 1/4- to 1/2-in. diameter test holes drilled through slab, often in connection with suction field extension testing.

    -- After the test hole is drilled, clean the dust out of the hole, operating the vacuum cleaner as briefly as possible (only a few seconds) in order to minimize any artificial reduction in the sub-slab radon level.

    -- Ideally, the hole should be temporarily closed with rope caulk or duct tape for 15 to 30 minutes, to permit the sub-slab concentrations to recover from any dilution resulting from the drilling and vacuuming process (Fo90). In practice, a delay this long may not always be practical. In such cases, a delay of only a few minutes may be sufficient—especially with flow-through cells, which draw a large

sample volume—in view of the qualitative way in which the results will generally be interpreted, as long as all of the test holes are treated in the same way.

-- Insert sample tube into test hole, and use rope caulk to seal the gap between the tubing and the top of the slab. The measured radon concentration will be significantly reduced if the gap is not effectively sealed, because significant amounts of house air will be drawn down through the hole, diluting the soil gas sample.

- For samples from inside a block foundation wall, gas samples will normally be drawn through pre-existing holes through the blocks, e.g., around utility penetrations such as water/sewer lines and electrical junction boxes.

-- After the sample tube has been inserted through such wall openings, an effort should be made to close the remainder of the opening using rope caulk, duct tape, or plastic sheeting (depending on the size of the hole), to reduce the amount of house air drawn in with the sample.

- Likewise, samples drawn from inside other openings (such as floor drains and chinks in stone foundation walls) would be drawn by inserting the sampling tube into the opening and then closing the opening with duct tape or plastic sheeting as possible, to reduce dilution of the sample.

-- Leaving the opening closed in this manner for some period of time before drawing the sample would give the radon concentrations in the opening an opportunity to rise toward their maximum levels.

- Samples of air from large regions (such as crawl spaces) would be obtained simply by drawing the sample from a central position within that region.

- The sample train will consist of:

-- A short length of sample tubing, leading from the test hole to the 0.8-micron filter;

-- A second length of tubing, leading from the filter to one port of the scintillation cell;

-- For flow-through cells, a third length of tubing, leading from the second port of the scintillation cell to the sample pump (or hand suction bulb).

- The preferred sampling and counting procedure for *grab sampling* is as follows:

-- If using an evacuated cell, open the valve for 10 to 15 seconds to allow the sample to fill the cell. (Note: One possible advantage of evacuated cells is that they draw only one-third to one-tenth the sample volume drawn by comparably sized flow-through cells, thus minimizing any impact of the sampling process on the radon concentrations in the region being sampled.)

-- If using a flow-through cell, operate the pump sufficiently long to draw at least three cell volumes of sample gas through the cell. For indoor radon measurements, EPA recommends 10 cell volumes (EPA92d). This should ensure that the sample gas has effectively displaced almost all of the previous (outdoor air) sample. Depending upon the volume of the cell and the flow rate of the pump, the sampling time required could range from a less than a minute, to several minutes.

-- Close the cell valve(s) immediately after sampling. Allow the cell to sit for four hours, to permit the radon progeny to come into equilibrium with the radon gas.

-- Place the cell in the photomultiplier/scaler scintillation counter, if necessary. (If a continuous radon monitor is being used, the cell will already be in the counter.) If the cell is being placed in a separate counter, allow a 2-minute delay after the cell is placed in the counter before commencing counting, to avoid counting spurious scintillations caused when the window of the cell is exposed to bright ambient light.

-- Count for as long as necessary to obtain the number of counts needed to provide the desired sensitivity, in view of background counts. Counting time will depend upon the radon concentration in the sample, and hence the counts registered per minute. For radon mitigation diagnostics, some sources feel that only 100 counts is sufficient for semi-quantitative purposes; for typical cell efficiencies (counts/minute recorded per pCi/L in sample), 100 counts would be obtained within a fraction of a minute (for samples well over 20 pCi/L) to perhaps 10 minutes (for samples below 4 pCi/L), depending on concentration. EPA's protocols for indoor radon measurements (EPA92d) recommend at least 1,000 counts for good statistics; this number of counts would be obtained within about 15 seconds to an hour. The time over which the counts are measured must be measured, if the counter is not part of a continuous radon monitor that counts for specified periods of time.

-- Convert the resulting counts into the radon concentration, using the calculational procedure indicated in Figure 12 (adapted from EPA92d).

-- After counting, purge the cell with outdoor air (or with aged air or nitrogen) to minimize the buildup of the cell background. Cells which were exposed to particularly high-radon samples may have to sit unused for a day before the background counts per minute has returned to acceptably low values.

US EPA ARCHIVE DOCUMENT

1. Divide the total number of observed scintillation counts by the total counting time, to determine the average counts per minute (cpm).

2. Calculate the radon concentration in picocuries per liter using the following formula:

Radon concentration (pCi/L) =

$$\frac{(\text{cpm from sample}) - (\text{background cpm})}{\text{Cell efficiency (cpm per pCi/L)}} \times \frac{1}{\text{Cell volume (L)}} \times \frac{C}{A}$$

In this equation, C and A are correction factors accounting for decay of radon and its decay products in the sample during the aging and counting processes, obtained as discussed in 3 and 4 below. In radon mitigation diagnostics, where aging and counting times may be reduced and where inaccuracies in the measurement are being accepted, the ratio C/A will generally be so close to 1 that this term can be ignored.

3. C is a factor accounting for the radioactive decay of the equilibrium radon and decay products in the sample during counting.

$C = (1.000063)^N$ where N = number of minutes over which the sample was counted

or

$C = (1.00378)^N$ where N = number of hours over which sample was counted.

The figure in the second equation is saying that the equilibrium cpm at the beginning of a 1-hour counting period will be 0.378% greater than the average cpm over the entire period.

For example, if the sample was counted for 30 minutes (0.5 hour):

$C = (1.000063)^{30} = (1.00378)^{0.5} = 1.00189$.

4. A is a factor accounting for the decay of the originally present radon and decay products in the sample during the time that the sample is aging, prior to counting.

$A = (0.99987)^N$ where N = number of minutes over which sample was aged, or

$A = (0.99248)^N$ where N = number of hours over which sample was aged.

The figure in the second equation is saying that, after one hour of aging, 99.248% of the radon still remains.

Figure 12. Procedure for calculating sample radon concentrations from measured counts when using the alpha scintillation cell technique for grab sampling.

- A *modified* sampling and counting procedure for *grab sampling*, intended to reduce the sample aging time at the expense of accuracy, is as follows.
  - -- Obtain the sample as in the preferred procedure above.
  - -- Allow the scintillation cell to sit for only 5 to 10 minutes after the end of sampling, rather than 4 hours. This period permits reasonable grow-in of the first radon decay product, polonium-218—one of the two alpha-emitting progeny—so that the sample is beyond the initial period of rapid alpha growth. It also provides time for essentially complete decay of any thoron in the sample along with the first thoron decay product, both of which are alpha emitters.
  - -- The sample is then counted as above.
  - -- The number of scintillation counts obtained by this approach can be converted to a reasonably accurate radon concentration, despite the non-equilibrium conditions existing during counting, by appropriate mathematical treatment of the non-equilibrium situation (Sc92). If the approach in Figure 12 is used, which assumes equilibrium, the result must be considered only semi-quantitative.
- The sampling and counting procedure for *sniffing* is as follows (EPA88b, Fo90):
  - -- Because the scintillation cell must be used in a flow-through mode with frequent counting, from a practical standpoint, this procedure requires an alpha-scintillation-based continuous radon monitor equipped with a flow-through cell. Evacuated cells and passive cells cannot be used in this application.
  - -- Operate the sampling pump continuously, so that a gas sample is being continuously drawn through the scintillation cell during counting.
  - -- Set the counter to make counts over a fairly brief interval, just long enough to give a reasonable number of counts for the radon concentrations in the samples being drawn. Commonly, a 30-second counting interval is used. A shorter interval could be used for very high-concentration samples, and a longer interval may be useful for low concentrations.
  - -- After beginning to draw a sample from the selected sniffing location, allow the system to cycle through a number of counting intervals, until the number of counts per interval becomes acceptably steady. Commonly, ten intervals are used. When the counts per interval have become reasonably steady, the last several intervals might be averaged to give the

value for that sampling location. Others suggest simply taking the counts for the last interval.

-- The results must be left in the form of number of counts, and treated as a qualitative/semi-quantitative number. There is no theoretical basis for converting these counts to an actual radon concentration, although some investigators have developed an empirical correlation between sniffing counts and actual radon levels for their particular equipment (EPA88b).

-- Since the background counts in the cell will be impacted by the samples drawn from the initial sniffing locations, it is recommended that the cell periodically be purged with outdoor air. During purging, the monitor would be taken outdoors for a few minutes, the pump operated continuously, and the counts per interval observed until the background counts have dropped to an acceptably low value.

If the previous sample had a particularly high radon concentration, the background created by this sample may be sufficiently high that it will not return to a suitable value in a short period of time. In that case, this cell should not be used for another sample having a potentially lower radon level, until the background from the previous sample has had an adequate chance to decay.

- ***Equipment and procedure*** **(pulsed ion chamber approach)**

- In place of the alpha scintillation cells and photomultiplier tube/scaler required for the alpha scintillation approach, the pulsed ion chamber approach requires an ionization chamber with an electrometer system to detect and count the ion pulses generated when radon atoms release alpha particles. Radon decay products are continuously removed from the chamber electrostatically, and thus nominally do not contribute to the ion pulses by their decay. In practice, the ion chamber, the electrometer system, and the pump required to draw samples through the chamber in this application, are all contained in a continuous radon monitor (Fe92).

- The pulsed ion chamber requires the same type of sample train as that listed previously for the scintillation cell approach: flexible sample tubing; a filter to be placed in the tubing between the sampling location and the monitor; and rope caulk or other material to seal the gap between the sample tubing and the slab or wall opening though which the sample is being drawn.

- During sampling, the sampling pump operates continuously, drawing a sample through the ionization chamber. Ion pulses are counted as the sample is being drawn. Sampling must continue until an adequate number of pulses have been recorded to provide the desired accuracy and sensitivity. Since radon decay products play no role in the counts, there is no need to be concerned about time required for sample aging, as with scintillation cells.

- The necessary counting duration will depend upon the radon concentration in the sample, and hence the ion pulse rate. The manufacturer recommends a counting time of either 2 or 20 minutes (Fe92).

- With this device, a *grab sample* may be viewed as one where the concentration and counting time are such that the number of counts are sufficient to give reasonable accuracy. A *sniffing sample* may be viewed as one where the number of counts is so low that the results must be considered semi-quantitative.

- ***Interpretation of results*** **(scintillation cell or pulsed ion chamber approach)**

- If the sub-slab radon concentration in one part of the slab is significantly greater than that in other parts (by a factor of three or more), *and* if there are potential entry routes in that part of the slab, then a SSD suction pipe should probably be placed in that part of the slab (if communication is not good), or at least biased toward that part (if communication is relatively good).

-- If there are not slab openings in the vicinity of the "hot spot," SSD pipe location should usually be biased toward the entry routes preferentially over the high-radon areas.

-- Note that radon distributions under a slab can sometimes be influenced by weather conditions, such as winds and precipitation.

- If radon concentrations inside a hollow-block foundation wall are unusually high, then the mitigator might be prepared to supplement the SSD or DTD system with a BWD component treating that wall.

-- Weather conditions, especially wind velocity, can influence radon concentrations inside block walls.

- If high radon levels are found in the joints of fieldstone foundation walls, this result suggests that the wall may be an important entry route. Unless the native soil is fairly permeable, a SSD system may not be expected to treat the soil on the exterior face of the wall, and thus may not treat wall-related entry. Especially if this result is found in combination with poor sub-slab communication, some mitigation technique other than ASD (e.g., basement pressurization or ventilation) should be considered.

- If high radon levels are found in a floor drain, the floor drain is probably not trapped. The drain should be trapped, both to prevent radon entry through this route and to avoid potential leakage of house air down through the drain into an ASD system.

- If high radon concentrations are found in the air in a crawl space adjoining a basement, the mitigation sys-

US EPA ARCHIVE DOCUMENT

tem may need to include an SMD leg in the crawl space to supplement the SSD or DTD leg in the basement.

3.5 Procedures for Other Types of Diagnostic Tests

As discussed in Section 3.1.2, there are a variety of other diagnostic tests that a mitigator may sometimes choose to perform, in addition to the visual survey (Section 3.2), suction field extension measurements (Section 3.3), and grab sampling/sniffing (Section 3.4). These other tests will have a practical benefit, and be cost-effective, less often than will those discussed in Sections 3.2 through 3.4. They will generally be warranted as pre-mitigation tests only when particular conditions exist.

These other diagnostic tests are discussed below.

3.5.1 Sub-Slab Flows

This diagnostic test involves measurement of the flows generated in the vacuum cleaner, as an add-on to the suction field extension testing discussed in Section 3.3. Commonly, this is done using a pitot tube. Other options are measurement of the pressure drop across a calibrated flow orifice in the vacuum cleaner nozzle, or some type of anemometer.

Sub-slab flow measurements can be used to aid in interpreting the suction field extension results, and in selecting an appropriately-sized fan for an ASD system.

- ***Simple sub-slab flow measurement***

In its simplest form, sub-slab flow testing involves recording the flow in the vacuum as the suction field extension test is being made, i.e., at the one vacuum cleaner speed setting used for the suction field testing. In the qualitative approach for suction field extension measurements, the flow measurement would thus be made at maximum speed in the vacuum (see Section 3.3.1). Under these conditions, the measured flows in the vacuum cleaner would not represent flows that could be expected in the SSD system, but would be only a qualitative indicator of whether sub-slab flows are high or low. In the quantitative approach, it would be made at the vacuum speed that was selected to maintain the sub-slab depressurization at the baseline test hole at the suction expected to be maintained by the ASD fan in the SSD suction pit (Section 3.3.2). Under these conditions, the vacuum flows should nominally simulate the ultimate SSD flows.

Such flow measurements are so easy to make that they should be considered any time pre-mitigation suction field extension diagnostics are being done. As a minimum, the flows should always be qualitatively estimated from the sound of the vacuum motor or the feel of the exhaust (Br92, Bro92).

If a mitigator is unfamiliar with the flow characteristics of the vacuum cleaner being used, flows in the nozzle should be measured: a) with the nozzle in free air, to show the highest expected flows; and b) with the open end of the nozzle closed fairly tightly (e.g., by pressing it against some suitable surface), to define "low" flows. These measurements will enable interpretation of observed flows during sub-slab testing.

Relatively high flows in the vacuum during sub-slab testing would tend to confirm observed good sub-slab communication. With good flows and good communication, the typical 50- or 90-watt centrifugal in-line tubular fan will generally be the appropriate choice for the ASD system, because these fans generate adequate suction at relatively high flows (1-2 in. WG at zero flow, 125-270 cfm at zero static pressure). High flows might also be revealing short-circuiting of air into the vacuum from some nearby slab opening, especially if they are observed in conjunction with limited suction field extension. If inspection suggests that short-circuiting is the cause of the high flows, then sealing of the leakage points may be an important component of the system installation; or, to the extent that complete sealing is not possible, the selected fan must be able to provide the necessary suctions while handling this leakage flow.

Relatively low flows in the vacuum cleaner during sub-slab testing would tend to confirm observed poor sub-slab communication. Depending upon how low the flows are, the 50- or 90-watt in-line tubular fans may still be a reasonable choice. However, at very low flows, a much higher-suction fan designed for low-flow operation may need to be considered, as discussed in Section 4.4.2. If flows are low but communication is good, this could be indicating a very tight slab and native soil with a good aggregate bed under the slab. Again, the 50- to 90-watt fans could be a good choice, to handle any increase in the flows that will occur if leaks develop in the slab.

Thus, the simple flow measurement can possibly provide some insights to aid in interpreting the suction field results, and may help confirm the selection of the system fan.

- ***More extensive sub-slab flow measurement***

The more extensive sub-slab flow measurement involves operation of the diagnostic vacuum cleaner at a range of speeds, rather than at only a single speed as in the "simple" case. Operation over a range of vacuum suctions and flows will enable determination of the effect of vacuum speed on nozzle flow. This information allows the calculation of a suction-vs.-flow "performance curve" for the sub-slab material, which can then nominally be used to aid in selecting an ASD fan having the optimum performance characteristics (EPA88b, Fo90).

For this testing to be useful, the vacuum cleaner *must* be operated with the sub-slab depressurizations at the baseline test hole being carefully adjusted (as discussed for the quantitative suction field extension testing in Section 3.3.2), so that the vacuum cleaner will nominally reproduce the flows that a SSD system would create. Otherwise, the vacuum cleaner suction-vs.-flow curve would be meaningless for system design. (If an ASD fan mounted on a 4-in. pipe is being used to generate the suction, instead of a vacuum cleaner, representative flows will almost automatically result, if the fan test stand is operated considering the likely suction losses in the piping of an actual system.)

US EPA ARCHIVE DOCUMENT

There is some question regarding how often such extensive (multi-suction) sub-slab flow measurements will in fact be useful, beyond the simple (one-suction) flow measurement discussed previously. As discussed in Section 3.1.2, the selection of the fan for a given installation will most commonly be made based upon experience in the geographical area, perhaps with some guidance from the simple flow measurement. The 50- or 90-watt centrifugal tubular fans (or some appropriate equivalent) will commonly be used whenever there is any reasonable flow and communication. Very high-suction units, discussed in Section 4.4.2, may be selected when the flows are unusually low and the communication is unusually poor. It is not clear how often the more extensive sub-slab flow measurements will be sufficiently accurate to permit meaningful fine-tuning of fan selection, beyond the relatively gross comparison just indicated. That is, it is not clear how often the multi-suction flow results could permit more rigorous selection of the particular fan brand and model having the optimum performance curve for a specific house.

Some mitigators have found the results from the more extensive flow measurements to provide useful insights in aiding ASD design. A common procedure for conducting such measurements is given below.

The equipment and materials required for this measurement are essentially the same as those listed in Section 3.3.2 for the quantitative suction field extension measurements. However, for the flow measurements, it is now required that a pitot tube (or some other device) be available for measuring the nozzle flows.

The vacuum cleaner is operated to generate a range of sub-slab depressurizations in the baseline test hole, 8 to 12 in. from the suction hole. The baseline test hole is the hole where depressurizations are being maintained at a level similar to that which would be generated in the sub-slab pit under a SSD suction pipe by an ASD fan. The suction at the baseline hole must be varied through several values within the range that the expected ASD fan would produce in the pit. These values would vary, depending on the particular fan envisioned.

For example, a 50-watt tubular fan might typically generate pit suctions between 0.1 and 0.75 in. WG, depending on flow; a 90-watt tubular fan might generate suctions between 0.25 and 2 in. WG. Thus, to help decide between a 50- and 90-watt fan, reasonable baseline suction values might be approximately 0.2, 0.75, 1, and 2 in. WG. The high-suction fans might generate suctions between 0.1 and perhaps 40 in. WG, depending on the specific fan and the flow rate. For these fans, reasonable baseline suction values might be 2, 10, and 20 in. WG. (If one of these high-suction fans is not generating at least a couple inches of water suction, the flows are probably too high to warrant a fan of this type.)

At each of these baseline sub-slab depressurizations, the flow in the vacuum nozzle is measured.

The results (baseline sub-slab depressurization vs. flow in the vacuum cleaner) are then plotted on a curve, with suction as the ordinate and flow as the abscissa. This curve, which will show flow increasing as suction increases, might be referred to as a "sub-slab performance curve." The basic approach for using these flow data to select a suitable fan is to compare this sub-slab performance curve with alternative *fan* performance curves (which will show flow *decreasing* as suction increases). The fan that would be selected would be the one for which the fan performance curve intersected the sub-slab performance curve at a point about mid-range on the fan curve. The basis for this selection is that that fan would be operating at a comfortable point, and should be able to handle increases or decreases in flow that might result over time, e.g., as the underlying soil dried out or became moist during different seasons, or as small cracks developed in the slab.

In fact, there is some inaccuracy in directly comparing the sub-slab and fan performance curves. The sub-slab performance curve is based upon suction *under the slab*; the fan performance curve is based upon suction *at the fan*. There are two reasons why sub-slab depressurization at the baseline hole does not equal suction at the fan: 1) suction losses as the gas in the pit accelerates up to SSD pipe velocity; and 2) suction losses in the SSD piping, between the slab and the fan. Accordingly, the sub-slab performance curve should be modified to account for these factors, and the fan performance curves then compared against the *modified* sub-slab performance curve, if this interpretation is to be rigorous.

Using standard equations for suction losses at abrupt entrances (Ca60), it can be calculated that the suction losses due to Item 1 above will usually be small at the velocities typical in SSD pipes; assuming that 1,500 ft/min is the highest pipe velocity that can be tolerated due to flow noise in the piping, the maximum suction loss due to pit gas acceleration would be on the order of 0.05 in. WG, depending on pipe diameter. As a result, this first factor can usually be neglected.

Thus, only the suction losses due to piping friction (Item 2 above) usually need to be considered. To address this, the mitigator would have to estimate what the suction losses in the envisioned system piping will be as a function of flow rate, using the procedures discussed in Section 4.6.1. The sub-slab depressurization vs. vacuum flow performance curve would then have to be corrected accordingly. For example, assume that the vacuum cleaner flow testing showed a flow of 30 cfm at a baseline sub-slab suction of 0.75 in. WG, and a flow of 40 cfm at 1.5 in. WG. And assume that the piping suction loss calculations suggested that piping losses would be about 0.08 in. WG at 30 cfm and 0.14 in. WG at 40 cfm. Under these conditions, the *modified* sub-slab performance curve would be plotted using a flow of 30 cfm at 0.75 + 0.08 = 0.83 in. WG, and a flow of 40 cfm at 1.5 + 0.14 = 1.64 in. WG. That is to say, the fan would have to be able to maintain a suction *at the fan* of 0.83 in. WG when the flow is 30 cfm, in order to maintain a suction *in the suction pit* of 0.75 in. WG at that flow.

In some cases, when the flows are low, the suction losses due to pipe friction might be low enough to be neglected, just as the losses due to pit acceleration. In those cases, the measured sub-slab performance curve could be used without modification.

US EPA ARCHIVE DOCUMENT

The decision regarding whether or not the more extensive sub-slab flow measurements are a cost-effective diagnostic test rest with the individual mitigator, and will be based upon the specific conditions that the mitigator encounters. However, it is expected that most mitigators will find this diagnostic test unnecessary most of the time.

3.5.2 Well Water Radon Analysis

Radon released from the surrounding soil and rock will dissolve to a certain degree in the underground aquifers from which wells draw. If a house is served by a private or community well, and if the well water is not aerated before use in the house, a significant fraction of the dissolved radon will be released into the air when the water is used. The release of the waterborne radon will be especially great when the water is aerated during use (e.g., when sprayed through a shower nozzle or in a dishwasher), and when the water is heated. The waterborne radon will thus contribute to the airborne radon levels in the house.

Water that is drawn from reservoirs and rivers, and water that has been treated by municipal water authorities will generally have very low radon concentrations. Thus, only water that is drawn directly from wells (without any intermediate aeration step) may be of concern.

Based upon typical water usage rates in a house, typical natural ventilation rates, and typical house volumes, a rule of thumb is that 10,000 pCi/L of radon in well water will contribute approximately 1 pCi/L to the indoor air concentrations, on the average over time, and on the average throughout the house (Bru83). By this rule of thumb, 40,000 pCi/L in the water would contribute an average airborne level equal to EPA's original action level of 4 pCi/L. Of course, water-induced airborne concentrations would be greatest at the time that the water was being used, in the immediate vicinity of where it was being used. While the exact contribution of the well water to the airborne levels will vary from house to house, because water usage rates, natural ventilation rates, and other parameters will vary from the typical values assumed, it has generally been found that the 10,000:1 rule of thumb is reasonably good (Be84, Fi91).

Any radon that is being contributed to the indoor air by the well water will not be impacted by an ASD system, which can address only that portion of the radon entering the house with soil gas. In the large majority of cases (although not always), the soil gas contribution to indoor levels will be much greater than that from well water. However, in geographical areas where elevated radon concentrations in the well water are common, radon from water can sometimes complicate the ability to achieve indoor levels below 4 pCi/L with ASD alone. In those cases, a water treatment step could be required in addition to ASD. In cases where it is desired to reduce the indoor concentration to levels well below 4 pCi/L, the radon contribution from well water will become increasingly important.

Mitigators working in areas where elevated water concentrations are sometimes encountered will be well advised to confirm the water radon levels. This knowledge will permit the mitigator to provide the best guidance to the homeowner regarding the reductions that might be anticipated with the ASD system. It will also save the mitigator from offering a guarantee to achieve 4 pCi/L (or some lower level) with ASD when in fact the water source might be sufficient to prevent that level from being achieved without water treatment.

In some cases, the homeowner might have already obtained a well water radon measurement through contacts with state or local agencies. But where the homeowner has not done this, the mitigator may be called upon to provide guidance on how the homeowner can get the water measurement made, or perhaps to arrange for the measurement himself.

The following discussion describes how to proceed in obtaining an analysis of the radon concentrations in water. As emphasized in the preceding discussion, such analyses are necessary *only* if: a) the house is served by a well; *and* b) experience in the area shows that well water radon concentrations can sometimes be high; *and* c) the homeowner has not already had an analysis completed.

- ***Screening using a gamma meter***

Before incurring the cost of sending a water sample to a laboratory for analysis, a simple, qualitative screening test can be conducted using a gamma meter to assess whether water radon concentrations might be high.

If radon levels in the water are sufficiently elevated, radon decay products and lead-210 deposited in the plumbing system will result in gamma radiation in the plumbing significantly above background levels. A gamma reading might be taken against the well water tank inside the house. One complication in using the water tank is that, if other radionuclides such as uranium or radium are present in the water, these elements will also contribute to the gamma radiation at the tank. It would be preferred to make the gamma measurements at some other location where a mass of water stands, but where uranium and radium will not be deposited. One location that meets these criteria is a commode.

If the gamma levels measured at a commode or elsewhere in the plumbing are significantly above the background levels measured in the house remote from the plumbing, this suggests that well water radon concentrations may be elevated. In this case, it would be advisable to have a water sample sent to a laboratory for quantitative analysis.

- ***Analysis by a laboratory***

The analysis of the water sample must be conducted by a qualified laboratory. Thus, the role of the mitigator would be to ensure that a good sample is properly drawn and provided to the lab. In some cases, a state agency may operate a laboratory which can conduct the analysis. Or, the state may be able to indicate laboratories in the area that can conduct such analyses, if the mitigator is not already aware of a suitable lab. Thus, the logical first step would be a contact with the appropriate state agency listed in Section 15 of this document. If the state cannot conduct the analyses or identify candidate laboratories, various laboratories offer analytical

US EPA ARCHIVE DOCUMENT

services by mail. These laboratories advertise in the trade literature.

Whichever laboratory is selected for the analysis will provide a vial in which to collect the sample. The lab will also provide instructions for collecting the sample, which will then be returned to the lab. The person collecting the sample should follow the instructions from the specific laboratory that he/she is dealing with.

Depending upon the particular lab, the house water sample might be injected (in known quantity) directly by the sample collector into a "cocktail" of organic compounds. The compounds in the scintillation cocktail emit photons of energy upon excitation by the alpha particles released by the radon, thus permitting the alpha emissions to be counted in the lab. Sometimes a known quantity of water sample is injected into a vial containing mineral oil, which extracts the radon out of the water and which is subsequently mixed with the cocktail at the laboratory. Alternatively, the sample could be collected by filling an empty sample vial, with the injection of the sample into the cocktail being handled later at the lab.

The typical sampling procedures discussed below addresses both sampling methods.

- Identify a tap in the house plumbing (indoors or outdoors) where a water sample can be drawn, prior to any carbon filter that may be present, and preferably prior to any water softener. This tap must be a cold water tap, so that the water sample will not have been heated (and thus potentially de-gassed) in the water heater.

- Before sampling, allow the water to run from the tap for a period of time to flush the "old" water out of that branch of the plumbing. This step is particularly important at taps (such as outside spigots) which may not have been used in days or weeks; some significant portion of the radon originally present in the old water may have decayed away.

- If the sample is being collected in an empty vial provided by the lab (which will most commonly be the case):

  -- Place a rubber adapter over the selected tap, connected to a length of tubing which directs the water to the sampling vial. The adapter prevents any aeration of the sample as it leaves the tap, even if the tap has an aerator. (If there is any doubt, remove the aerator.)

  -- Allow the water to flow, via the length of tubing, into the open sample vial. The end of the tubing should be placed well below the water surface in the vial, to avoid aeration. The water is allowed to flow, overflowing at the mouth of the vial, until the vial has been flushed a number of times.

  -- The vial is then immediately capped, using care to avoid any air bubble in the vial.

  -- Alternatively, instead of the rubber adapter, fill a bowl or bucket with water continuously running from the tap, with the tap outlet (including any aerator) below the water surface in the bucket. Water will be continuously overflowing the top of the bucket. Submerge the capped vial in the bucket; remove the cap beneath the tap, allowing the vial to fill; then re-cap the vial under water, making sure that no air is trapped.

  -- The vial is then immediately delivered or mailed to the lab for analysis.

- If the sample is to be injected directly into the cocktail (or into mineral oil) by the sample collector:

  -- Where a rubber adapter with tubing has been placed over the tap, allow the water to flow, via the length of tubing, into a suitable small open container. The end of the tubing is placed well below the water surface in the container, to avoid aeration where the water leaves the tubing. The water is allowed to flow until the container has been flushed a number of times.

  -- Using a syringe, a known quantity of water in the container (as specified by the lab) is withdrawn, and is injected into the capped vial containing the cocktail. The vial is then vigorously shaken, to mix the water sample and the cocktail. The sample withdrawn from the container using the syringe should be withdrawn well below the surface of the water in the container.

  -- Alternatively, instead of filling a container, bend the tubing upward and turn the tap on slowly, so that the water slowly overflows the upward-directed end of the tubing. Insert the syringe needle down into the open end of the tubing, and withdraw the water sample from well below the surface. If the water sample is being drawn from an outside spigot, a short length of hose screwed onto the spigot would serve this same purpose.

  -- The vial is then immediately delivered or mailed to the lab for analysis.

3.5.3 Measurements to Determine Significance of Building Materials as a Radon Source

On infrequent occasions, materials used in the construction of the building may be important contributors to indoor radon levels. This will usually be the case only where stone with an unusually high natural radium content has been used as aggregate in the concrete, or perhaps for structures such as fireplaces. It can also occur if, e.g., uranium mill tailings have been used in the aggregate or as fill around the house.

In most areas of the country, mitigators will rarely see a case where building materials are making any significant contribution to indoor radon. In those areas, pre-mitigation tests

addressing building materials will not be warranted. But in those areas where building materials are occasionally an important source, a mitigator may be well advised to make a gamma survey (and/or perhaps a flux measurement) wherever conditions look suspicious, before guaranteeing that 4 pCi/L will be achieved with an ASD system alone.

In worst-case situations, removal and replacement of the elevated building materials or coating them with some appropriate radon barrier may be required in order to reduce the house below 4 pCi/L. It is doubtful whether such steps would be warranted in cases other than, e.g., uranium mill tailing contamination; these steps would thus be beyond the scope of the typical mitigator. And the treatment of this building material source would be required for the purpose of protecting the occupants from gamma radiation, as well as from radon.

Two approaches can be considered for estimating the relative importance of building materials. The simplest approach is the use of a meter to determine gamma radiation at various locations around the house. Materials having a high concentration of radium (and also, necessarily, of other radionuclides) will also have high gamma emissions. Thus, high gamma radiation is evidence of possibly high potential for radon release. The second approach for estimating building materials effects is the "flux measurement," where a container is sealed over the surface of, e.g., the slab, and the increase in radon concentration over time is measured.

Of the two approaches, the gamma survey is the easiest to conduct, and permits numerous, rapid measurements around the house to locate hot spots. Thus, mitigators in areas where building materials may be a common problem should probably obtain a gamma meter to permit such surveys, as discussed later. The flux measurement may provide a more quantitative estimate of the potential for radon emission from the building surface. However, the flux measurement takes more time to conduct, and the number of test locations is thus limited. The flux measurement approach is probably most applicable in cases where the results from a previous gamma survey indicate that the building surface is "hot," and a more quantitative estimate is desired of how much radon may in fact be being released from the materials.

- *Gamma survey*

Gamma radiation is naturally present in the environment around any house, as a result of naturally-occurring radionuclides in the surrounding soil and rock, and as a result of cosmic radiation. Natural outdoor ground-level gamma readings vary around the country, but a typical range is 5 to 20 micro-Roentgens per hour (μR/hr).

Commonly, if there are not elevated levels of radionuclides in the concrete aggregate or in other stone-based building materials, the gamma radiation levels inside a house will be slightly lower than those outdoors, because the house shell is providing some shielding from the natural radiation. But if gamma levels at specific locations indoors are higher than the levels outdoors, this would suggest that the building materials in the immediate vicinity of the high indoor readings have a higher radionuclide content than does the native soil and rock around the house.

The gamma survey thus consists of making gamma measurements at several locations indoors, and comparing these readings against those made at several locations outdoors.

A hand-held scintillometer that measures ionizing radiation in units of μR/hr should be used. Such a "micro-R" meter is the most convenient and commonly-available instrument to provide the results required here.

The micro-R meter must be calibrated (i.e., the number of meter counts/sec per μR/hr must be determined). Commonly, these instruments are calibrated in a laboratory using a known cesium-137 source. Laboratory calibrations using a radium-226 source are not recommended; meters calibrated using radium appear to give readings in the field that are high by a factor of about two, due to differences in the gamma energy of this radionuclide relative to the spectrum of gamma-ray energies normally found in nature. A more scientifically rigorous calibration is possible, by calibrating the meter against a pressurized ion chamber. Alternatively, specially-prepared radioactive test pads could be used which better represent the normal natural spectrum of gamma-ray energies. These more rigorous calibrations will generally not be conveniently available to a mitigator, and they are not really warranted in any event. The improved accuracy that these better calibrations would provide is not necessary, given the comparative manner in which the results are used (indoor vs. outdoor levels).

Readings with the micro-R meter should be made at multiple indoor locations around the lowest level of the house, making sure that readings are made near all major structures containing earth-based building materials. These structures would include the slab, the foundation walls, and fireplace structures. At each test location, a reading should be taken: a) with the meter flush against the building surface; and b) with the meter 3 ft away from the surface. The gamma radiation emitted by a surface will drop significantly as the meter is moved away; repeating the measurements flush with the surface and 3 ft away will help confirm the extent to which the observed radiation is in fact coming from the surface rather than from other sources.

Readings with the micro-R meter should also be made at several locations outdoors, around the perimeter of the house. Again, at each location, readings should be taken flush against the ground and also at a height of 3 ft.

The indoor vs. outdoor readings are then compared. In general, the indoor readings should be about the same as the outdoor readings, or perhaps one or two μR/hr lower. If indoor levels are slightly higher (by, say, one or two μR/hr), this result would suggest that the material used in construction is slightly more elevated than the native soil and rock, but the building materials are not contributing significantly to indoor radon levels. However, if any significant number of the indoor readings are significantly greater than the outdoor background (by, say, 10 to 20 μR/hr or more), suggesting that some significant amount of the building material is distinctly elevated relative to background, then the mitigator should be

US EPA ARCHIVE DOCUMENT

alerted that building materials might be contributors to the indoor radon levels. One mitigator uses a guideline that stone foundation walls can be expected to be important radon sources when gamma readings flush against the wall are twice the background level (Bro92).

If it thus appears that building materials might be a source, the mitigator has two options.

1. If the mitigator's experience enables a reasonable judgement from the micro-R readings regarding what the building material contribution may be, i.e., if it is reasonably clear that building materials are not the sole or predominant source, and that some soil gas treatment step is thus still necessary, then one option is for the mitigator to advise the homeowner of this situation, warning that some residual radon levels will remain after installation of the ASD system, due to the building materials.

2. If the building material contribution may be a major component of the indoor radon levels, it may be advisable to conduct a flux measurement, to better quantify how much radon is in fact being released from the building materials.

It is emphasized that a structure must be of relatively significant size, and/or have distinctly elevated gamma readings, to pose a significant threat in terms or radon emissions. An isolated stone fireplace with slightly elevated gamma readings will probably not be a significant source. Rock collections, or collections of radium-dial clocks, will almost never be significant sources, despite elevated localized gamma readings.

In addition to revealing the possible contributions of building materials to indoor radon, gamma surveys can also provide other information that can be helpful in system selection and design. As mentioned in Section 3.5.2, a high gamma reading at a commode inside the house (resulting from accumulated radon decay products) will suggest whether there may be elevated radon levels in the well water. In special cases where high-radium strata exist in the underlying soil, hot spots identified by the gamma meter around the slab may suggest where the strata may be surfacing around the foundation, information which may or may not be useful in ASD design.

- ***Surface flux measurements***

Flux measurements attempt to determine the actual rate at which radon is being released from a solid surface, in picoCuries per unit area of the surface per unit time. Since the actual release of radon is being measured, rather than using gamma radiation as a surrogate, flux measurements would be expected to provide a more rigorous estimate than would a gamma survey of the actual radon contribution from a building surface.

As indicated previously, flux measurements are not suitable as a routine pre-mitigation test for potential building material contributions to indoor radon. If a mitigator is working in an area where potential building material contributions are a common concern, the gamma survey approach should be utilized. Flux measurements will be cost-effective under only certain circumstances, discussed earlier.

A procedure for flux measurements has been discussed elsewhere (EPA88b); due to the limited applicability of this measurement, the full procedure will not be repeated here. In summary, a container of known volume having one open end of known area is sealed, open end down, onto the surface from which the flux is to be determined. A radon grab sample is withdrawn from the sealed container at the beginning of the test, and than again after some period, typically 30 minutes to an hour. From the measured increase in radon concentration inside the container over this time, a radon flux (e.g., in units of $pCi/ft^2/hr$) can be calculated.

From typical uncracked concrete surfaces, the radon emanation (due to naturally occurring radium in the aggregate, about 1 pCi per gram of concrete) is roughly 10 to 40 $pCi/ft^2/hr$. Measured levels significantly above that range would suggest that the concrete is an above-average contributor to indoor radon levels.

It is emphasized that *the flux container must be sealed over a solid, uncracked section of the building surface*. The objective of the test is to determine the emanation of radon from radium in the building material (or the diffusion of radon through the solid, unbroken material). If the flux container is sealed over an opening, such as a crack in the slab or such as the porous surface of a block foundation wall, then the radon that appears in the container will be the combined result of multiple mechanisms: 1) emanation from the material (or diffusion through the solid material); and 2) diffusive movement (or convective flow) through the opening.

Measurement of the diffusive/convective flux of radon through openings has sometimes been utilized (often in research settings) in an effort to understand which entry routes may be the most important among alternative candidates. Such a use of flux measurements, over openings, is not discussed here. From a mitigator's standpoint, this information is either unnecessary as a pre-mitigation tool for ASD design, or can be estimated from more direct and simpler measurements, such as direct grab sampling/sniffing beneath the slab or inside block walls. In any event, the thrust of the flux measurements being discussed in this section is to determine the possible contribution of building materials, and location of the flux container over an opening would invalidate the test for that purpose.

3.5.4 Pressure Differential Measurements Across the House Shell

Pressure differential measurements across the house shell can be made at two locations:

- Above grade, across the walls between the house interior and the outdoors.

- Below grade, across the slab (i.e., between the house and the sub-slab region). In this context, the sub-slab pressure measurements would be made *without* any suction being drawn on the sub-slab region by a vacuum

US EPA ARCHIVE DOCUMENT

cleaner or fan, for the purpose of determining the natural depressurization of the house relative to the sub-slab.

Pressure differential measurements across the shell can be considered for at least two different purposes, in connection with ASD systems:

- To permit more rigorous interpretation of the sub-slab suction field extension results when designing an ASD system. For this purpose, below-grade measurements (across the slab) would be the most meaningful; they would also be easily conducted in conjunction with the suction field extension testing.

- To indicate whether the house may be prone to combustion appliance backdrafting, which could be exacerbated by an ASD system. For this purpose, above-grade measurements would be appropriate.

Pressure differential diagnostics could also be considered in conjunction with blower door operation, in the selection/design of basement pressurization systems. This testing could suggest how much supply flow is required through the blower door (and hence how large a system fan would be required) in order to adequately pressurize a basement relative to the sub-slab. An analogous measurement could aid in the design of crawl-space depressurization systems, although in that case, the question would be how large a fan would be needed to depressurize the crawl space relative to the living area.

Uses of pressure differential measurements to aid in interpreting suction field extension test results. There are two ways in which pressure measurements across the shell might be used to aid in interpreting sub-slab suction field extension test results.

- Sub-slab suction field extension measurements sometimes have to be made when the weather is not very cold, or without all exhaust appliances operating. In such cases, pressure measurements across the shell, conducted in parallel with the sub-slab suction field testing, would indicate how the driving force existing during the diagnostics compares against the estimated maximum driving force that might be estimated to exist during cold weather with the exhaust appliances operating. The pressure differential measurements might show that the existing driving force during the diagnostics was much less than this estimated maximum (perhaps 0.025 to 0.035 in. WG, according to the conservative rule of thumb discussed in Sections 2.3.1b and 2.3.1e). In that case, the pressure measurements would reveal what sub-slab depressurizations the diagnostic vacuum cleaner (or fan test stand) would have to establish during the diagnostics in order to compensate for the higher driving forces that would be expected later.

  For this purpose, the preferred pressure differential to measure is that across the slab, between the house and the sub-slab region (with the sub-slab vacuum off); that is the differential against which the ASD system will have to compete. The pressure differential between indoors and outdoors above grade will normally tend to be slightly greater than that across the slab, and could thus tend to give a slightly elevated indication of what the actual driving force is. Not only is the differential across the slab the preferred measurement for this purpose, but it is easy to obtain if holes have already been drilled through the slab in conjunction with suction field extension tests.

- Pressure differential measurements across the shell can be made under a variety of conditions with different exhaust appliances operating, or perhaps at different weather conditions, in an effort to identify the most challenging house depressurization driving forces in a particular house. The mitigator might then elect to ensure that any suction field extension tests are conducted under those most challenging conditions. Or, when interpreting the suction field extension results to ensure the ability of the system to handle the worst-case driving force, the mitigator can then use the actual expected maximum depressurization for that house, rather than the rule of thumb values for thermal and appliance effects (0.025 to 0.035 in. WG). Again, the preferred pressure differential to measure would be that across the slab, with the sub-slab vacuum off.

In practice, whenever a mitigator plans to conduct sub-slab suction field extension diagnostics anyway, it makes sense to include pressure measurements *across the slab with the vacuum off*. These results would then be used to aid in data interpretation, as discussed in the preceding paragraphs. Such measurements with the vacuum off are already included in the protocols described in Sections 3.3.1 and 3.3.2 for suction field extension diagnostics. On this basis, pressure differential measurements across the house shell (slab) would be conducted any time suction field extension measurements are felt to be warranted, i.e., primarily when sub-slab communication is unknown or poor.

Where suction field extension diagnostics are conducted, they should be made with the exhaust appliances operating, simulating worst-case conditions as closely as possible. If worst-case house depressurizations cannot be fully simulated, then the slab pressure measurements with the vacuum off can be used to make any necessary corrections in the suction field results based upon the rules of thumb. For example, if the diagnostics are not performed during mild weather—at a time when the pressure differential across the slab was about zero with the vacuum off—it would be assumed that the sub-slab depressurizations measured with the diagnostic vacuum cleaner operating should be at least about 0.015 in. WG, to account for the increased driving force expected from thermal effects during cold weather. (Alternatively, if the suction field extension diagnostics are performed during mild weather, the house could be deliberately depressurized using a blower door during the testing to simulate cold-weather depressurizations; this is not commonly done.)

Most mitigators never make pre-mitigation indoor-outdoor pressure differential measurements *above grade* as part of sub-slab diagnostics.

US EPA ARCHIVE DOCUMENT

Uses of pressure differential measurements to assess the risk of backdrafting. One potential concern with ASD systems is whether the air drawn out of the house by the system may be sufficient to cause backdrafting of combustion appliances, possibly exposing the occupants to carbon monoxide. Backdrafting as a result of ASD operation is most likely to occur when: a) the house is particularly tight, as in very cold climates or in other climates where the house has been intensively tightened for energy efficiency; b) the flue is partially blocked or improperly designed, reducing the draft; c) other major depressurizing appliances are also operating; or d) the ASD system is exhausting a significant amount of house air, as with BWD systems. ASD systems will generally not cause backdrafting except in cases where the house draft was marginal to begin with. Many mitigators will encounter ASD-induced backdrafting only infrequently, except in very cold climates (Wi91, Ang92, Fit92). However, the consequences are of backdrafting are so severe that mitigators must always be alert to this threat.

There are several options for testing for backdrafting. Because mitigators often conduct backdrafting tests as a *post*-mitigation diagnostic, at which time they are *required* by EPA's standards (EPA91b), these options are discussed in Section 11.5 of this document. However, since one of the test options involves pressure measurements across the house shell above grade, and since a mitigator might choose to perform this testing prior to mitigation, to assess whether selection of ASD for a given house might potentially contribute to backdrafting problems, this issue is addressed briefly here.

Measurement of the pressure differential across the shell above grade as an indicator of possible backdrafting assumes that: a) the draft in the flues of furnaces, water heaters, etc., can be expected to be a predictable value relative to the outdoor pressure; and b) backdrafting should not occur as long as the depressurization of the house (relative to outdoors) is less than that value. The draft in a well-connected, unobstructed flue during cold weather may typically be about 0.028 in. WG (Br92). Thus, for example, two draft protocols suggest that, to be conservative, house depressurization by 0.020 in. WG or more, as measured across the shell above grade, should be viewed as a threat that backdrafting may occur in traditional gas-fired furnaces (CMHC88, TEC92).

However, in fact, the draft can sometimes be well below 0.028 in. WG (sometimes falling to about 0.01 in. WG or less) when the weather is mild, when the flue is obstructed, or when the flue is not properly connected to the appliance (Fit92, Ne92). Thus, it will be wise to supplement any pressure differential measurements across the shell with a more positive determination of whether combustion product spillage is in fact occurring (e.g., using chemical smoke tracer around draft hoods). See Section 11.5.

Procedure for pressure differential measurements across the house shell. The procedure for making pressure differential measurements across the house shell at the slab has been discussed in connection with sub-slab suction field extension testing, in Sections 3.3.1 and 3.3.2.

The procedures for making pressure differential measurements across the house shell above grade have been described in other documents (Fo90). Because of the limited applicability of these measurements for ASD design, only a summary of the procedure will be presented here.

The equipment required for the measurements is a digital micromanometer, sensitive to $\pm$ 0.001 in. WG, the same device required for the sub-slab suction field extension measurements described in Section 3.3. Also required are one or two lengths of flexible (but not collapsible) tubing that can be connected to the micromanometer ports.

One length of tubing must be long enough to run from the reference port of the manometer to the outdoors, through a crack in a door or window that can be closed over the tubing without pinching it. The micromanometer itself (or the end of the sample tube connected to its second port) would be at the indoor location where house depressurization (or pressurization) is to be measured. This indoor location will depend upon the specific objectives of the testing. For example, if the objective is to assess the possible risk of backdrafting, the indoor location will be near where the combustion appliances are located.

It is usually difficult to obtain a reliable measurement of the pressure differential across the house shell above grade when any wind is blowing. Winds will tend to pressurize the upwind side of the house, and depressurize the downwind side. These pressure effects will vary as the wind velocity varies. In addition, wind blowing directly into the open end of the sample tube outdoors will create a dynamic effect on the pressure readings obtained by the micromanometer, a dynamic effect that will fluctuate as the wind varies.

Several approaches have been suggested in an effort to reduce the fluctuations in the pressure measurements created by the dynamic effects of winds. In concept, one approach would be to ensure that the end of the outdoor sample tube is always oriented perpendicular to the wind direction, so that the wind is always blowing perpendicular to the opening and the measured pressure is the static pressure. This is impractical, since the wind direction is not steady and is difficult to monitor at the precise location of the sample tube. A more practical approach is to place some diffuser material over the open end of the tube, to reduce flow-induced effects. Fritted glass (Fo90), cotton (Fo90), and open-cell foams such as used in air diffusers for aquariums (Tu92), have been suggested for this purpose. Yet another approach would be to mount the end of the tubing between two parallel plates (Br92), or to mount it in a section of pipe perpendicular to the tube and open at both ends. [One mitigator uses a soda can for this purpose (Bro92)]. This approach would ensure that air flow is always perpendicular to the opening in the tube, and hence that it is the static pressure being measured.

In addition to the concern about avoiding wind-induced dynamic pressure effects so that a static pressure can be measured, there is also concern about the variation in the static pressure. The static pressure on a given side of the house will change as the wind velocity varies. In addition, the static pressure will be different on different sides of the house, so

that the pressure differential result will vary depending upon where the outdoor measurement is made.

In selecting the measurement location, the effects of the house on the outdoor static pressure can be avoided by extending the outdoor sample tube a distance away from the house. As another option, one could make individual measurements across the shell on all four sides of the house, and then average these in an effort to "average out" the effect of location around the house. Some investigators have extended sample tubing to all four sides of the house, manifolding all of the tubes together to provide a single integrated pressure reading; this approach will not normally be warranted during commercial diagnostic testing; in addition, some investigators suggest that this approach will not in fact provide an effective integration (Br92).

The house conditions during the measurements are selected based upon the specific test objectives. These conditions include: exterior doors and windows open vs. closed; interior doors open vs. closed; and exhaust appliances on vs. off. When the objective is to assess the driving force for radon entry: the exterior doors and windows are normally closed; interior doors are often open, but tests are sometimes also repeated with the doors closed to assess depressurization in particular rooms that may often be closed off by the occupants; and exhaust appliances are often on, but tests may be repeated with the appliances off. When the objective is to assess the threat of backdrafting (e.g., based on the procedures in References CMHC88 and Ne92): the exterior doors and windows are normally closed; the interior doors are often selectively closed in a pattern to maximize depressurization in rooms having combustion appliances; and exhaust appliances are normally on, again with the intent of creating a worst-case situation.

3.5.5 Blower Door Measurements

A blower door is a calibrated fan which can be mounted in a doorway of a house with the remainder of the doorway sealed, blowing out of or into the house. The fan can be adjusted to operate at different flow rates (up to about 3,000 cfm) to maintain alternative selected degrees of depressurization or pressurization within the house, typically in the range of 0.06 to 0.24 in. WG. The air flow rates through the fan at these different depressurizations are measured.

From these results, the "effective leakage area" through the house shell (as defined by a Lawrence Berkeley Laboratory infiltration model) or the "equivalent leakage area" (as defined by the National Research Council of Canada) can be calculated. The effective leakage area is the nominal area of the openings through the shell that would have to exist in order to explain the blower door flows that would be predicted when the measured results are extrapolated down to 0.016 in. WG *if* these openings were combined into a single bell-mouthed nozzle. The equivalent leakage area is the nominal area of shell openings when the results are extrapolated down to 0.040 in. WG, if the openings were combined into a single round, sharp-edged orifice.

In concept, this approach is generally analogous to the standard orifice flow calculation. If an orifice of known diameter is mounted in a pipe, and if the pressure drop created by gas or liquid flow across this orifice is measured, the flow velocity of the gas or liquid in the pipe can be calculated. In the case of the blower door, the flow rate is measured for a known pressure drop, allowing the orifice size (i.e., the effective or equivalent leakage areas) to be calculated.

It is emphasized that the blower door calculations assume that all of the openings to be combined into a single bell-mouthed nozzle or into a single sharp-edged orifice, whereas the actual openings are in fact numerous small gaps of varying configurations with much different flow characteristics than a nozzle or a round orifice. As a result, the calculated effective or equivalent leakage areas are *not* the *actual* combined areas of all of the openings. Nevertheless, the effective or equivalent leakage areas can still be useful numbers which allow one house to be compared with others in terms of leakiness.

Depending upon the manner in which the blower door is operated, it can be used to determine the effective leakage area for the entire house, or for an individual story of the house.

Commonly, the effective leakage area is used, in conjunction with a mathematical model and various assumptions, to estimate the average natural ventilation rate of a house. It should be understood that any such calculation of the ventilation rate from blower door data is only an estimate. The blower door determines effective leakage area, not ventilation rate. The actual ventilation rate at any point in time will depend heavily on weather conditions, house characteristics, nature and location of the openings, and homeowner activities; to the extent that these features are incorporated into the models used to estimate ventilation rate from blower door data, they can be incorporated in only a gross, averaged manner.

As a rough rule of thumb, the average natural ventilation rate of a house (expressed in cfm) is estimated to be approximately one-twentieth of the blower door flow rate (in cfm) when the blower door is depressurizing (or pressurizing) the house by 0.20 in. WG. While this simple correlation gives a rough indication of average natural ventilation rate, possibly adequate for many field mitigation purposes, it can be in error by a factor of 2 or more in some cases.

The effective leakage area of a house, or the ventilation rate calculated from blower door results, will rarely, if ever, be information that can aid in ASD design. Thus, mitigators planning to install an ASD system in a house will essentially never conduct a blower door diagnostic test for ASD design purposes. Blower door testing will be warranted primarily when the features of a particular house require a mitigator to assess specific alternative mitigation options other than ASD.

Blower door tests are most likely to be considered when basement pressurization, crawl-space depressurization, or house ventilation are among the mitigation techniques being assessed. The blower door result would indicate the tightness of the basement (or crawl space), providing a direct measure of how large a fan would be required to maintain the desired

US EPA ARCHIVE DOCUMENT

pressurization of the basement (or depressurization of the crawl space). Or, if house ventilation were being considered, the blower door would provide an estimate of the average natural ventilation rate of the house, permitting a calculation of how many cfm of fresh air would be required to increase the ventilation rate adequately to get the desired radon reduction.

Procedures for operating blower doors and for converting the results to effective leakage areas and estimated natural ventilation rates have been described elsewhere (She80, ASTM87, TEC87, EPA88b, Tu88b). The standard procedure is presented in ASTM E 779-87, "Standard Test Method for Determining Air Leakage Rate by Fan Pressurization" (ASTM87). Because blower door testing in not usually warranted for ASD design, no discussion of blower door procedures will be presented here.

3.5.6 Tracer Gas Testing

Three types of tracer gases have been used for various purposes associated with radon mitigation: halogenated hydrocarbons, commonly used as refrigerants; PFTs; and SF_6. Of these, only halogenated hydrocarbons would be convenient for practical use by a commercial mitigator for pre-mitigation testing in connection with ASD systems, and even they would likely have limited value. PFTs might be used infrequently for pre-mitigation ventilation rate measurements, in cases where a house ventilation technique is being considered for mitigation. Both halogenated hydrocarbons and PFTs might also infrequently find some use as a post-mitigation diagnostic tool for trouble-shooting ASD systems that are not performing as expected. The use of SF_6 (usually to determine house ventilation rate) requires such elaborate equipment, and is so labor intensive, that SF_6 would not be considered outside of a research setting.

- ***Halogenated hydrocarbons***

The advantage of halogenated hydrocarbons, marketed under such trade names as Freon® and Genetron®, is that both the gases and the detectors are relatively inexpensive, simple to use, and readily available through the refrigeration and air conditioning industry.

The primary disadvantage of chlorinated refrigerants is that they are destructive to the Earth's stratospheric ozone layer. For this reason, the original chlorofluorocarbon (CFC) refrigerants (such as R-12) and the so-called "transition" hydrochlorofluorocarbon (HCFC) refrigerants (such as R-22), are being largely phased out of production over a 10- to 25-year period, in accordance with the Clean Air Act Amendments of 1990 (Public Law 101-549, Title VI). Venting of these substances by the refrigeration industry is now banned by those Amendments. While the Amendments do not explicitly ban the use of small quantities of CFCs and HCFCs as tracer gases for radon mitigation diagnostics, EPA recommends that these gases never be used for mitigation diagnostics.

Only the chlorine-free advanced refrigerants—hydrofluorocarbons (HFCs), such as R-134a—are not damaging to the ozone layer. The venting of these gases by the refrigeration industry is not currently banned. Therefore, to the extent that a mitigator might wish to conduct this type of diagnostic testing, HFCs should be used.

Refrigerant gases can be obtained in conveniently sized compressed cylinders. Durable hand-held detectors, designed to pinpoint the source of refrigerant leaks, can be obtained for about $200 to $300. These detectors, which are usually battery-powered and portable, are sensitive to refrigerant concentrations as low as 5 to 50 ppm. Many of these detectors give an audible signal when trace levels of the refrigerant are detected, with the signal varying in intensity depending upon the concentration present in the air. The output is thus qualitative, which is usually sufficient for radon diagnostic purposes.

It must be ensured that any detector that is purchased is capable of detecting the specific refrigerant that is going to be used as the tracer. The older, CFC-based detectors, which function by detecting chlorine, will not detect HFCs.

Most mitigators will find testing using halogenated hydrocarbons as a tracer gas to be unnecessary as a pre-mitigation diagnostic in most cases. Especially where sub-slab communication is good, sufficient information for ASD design will usually be obtained from prior experience, from the visual survey, and from suction field extension testing (if needed). Testing using HFC tracers will not be needed.

However, there might occasionally be situations where innovative utilization of HFC tracer testing prior to mitigation might be cost-effective. Among the examples, indicated in Section 3.1, are:

- Injection of the tracer beneath an adjoining slab on grade, and detection of the tracer in the exhaust from a vacuum cleaner drawing suction beneath the adjoining basement slab, in an effort to assess whether the suction field from a basement SSD system would extend beneath the adjoining slab on grade.

- Injection of the tracer into one drain tile entering a sump, and detection of the tracer in the exhaust from a vacuum cleaner drawing suction on a second drain tile entering that sump, in an effort to determine whether the tiles form a contiguous loop.

Halogenated hydrocarbons have also occasionally been used for post-mitigation diagnostic tests, as discussed in Section 11. For example, HFCs injected into ASD exhaust piping can be used to detect where exhaust gases may be re-entraining into the house.

- ***Perfluorocarbon tracer gases (PFTs)***

In the most common application of PFTs, one or more 2-in.-long vials which emit a selected PFT gas are deployed in selected locations around the house. These emitters passively release any one of several alternative (slightly different) perfluorocarbon compounds at a steady rate, dependent on temperature. After the PFT concentrations in the house have been given a chance to reach steady state, PFT detectors are de-

US EPA ARCHIVE DOCUMENT

ployed at selected locations. These detectors adsorb any of the several PFT gases that are being used.

The emitters and the detectors are purchased from a designated laboratory. After the detectors have been exposed for a selected period of time (commonly two days to one year), the detector is returned to the laboratory for analysis. Based upon information supplied by the tester regarding the test conditions, the laboratory report calculates the ventilation rate (where the emitter and detector are placed in the same zone) or the flow rate of air between zones (when the emitter and detector are placed in different zones).

Because multiple PFT compounds are available, it is possible to emit different compounds simultaneously in different zones in the house (e.g., with one compound emitted in the basement, one in the living area, and one in an adjoining crawl space). Detectors would be deployed in all zones. From the results, it would be possible to calculate not only the total ventilation rate of the house, but also the rate of air movement between the different zones within the house.

It is important to recognize that the ventilation rates determined by PFTs will be integrated (i.e., averaged) over the entire period that the detector was deployed. Ventilation rates in houses can vary significantly over time, e.g., as wind patterns change, as windows are opened, etc. The PFT result will average all of these effects. It is also important to recognize that, since ventilation rates and interzonal flow rates vary with environmental and house operating conditions, measurements made under one set of conditions will not address what the rates would be under different conditions.

To the extent that PFTs might have a practical use in commercial pre-mitigation diagnostics, it would be to determine average house ventilation rates as part of designing a house ventilation system. PFTs are relatively easy to use, but they do take time to deploy and retrieve, they are relatively costly, and there is commonly a delay in obtaining analytical results back from the laboratory. Thus, although PFTs provide a more rigorous measure of house ventilation rates than do the estimates obtained from blower door testing, many mitigators needing to make ventilation rate measurements will probably find it more convenient to use the blower door.

In research projects, PFTs have sometimes been used for post-mitigation measurements in ASD systems. For example, some investigators have released PFTs inside the house and measured the amounts appearing in the ASD exhaust gas. These tests were conducted to estimate the amount of indoor air being exhausted by the ASD system, and hence the system heating and cooling penalty (Bo91, Fi91). It is doubtful that a mitigator would often have occasion to conduct such tests commercially. In one project (Fi91), a PFT emitter was placed inside ASD exhaust piping to measure the amount of exhaust re-entrained into the house. However, this approach is experimental, and would likely not be practical for trouble-shooting a commercial installation.

The procedures for utilizing PFTs for ventilation measurements are discussed elsewhere (Di86). Because PFTs will rarely be used in conjunction with commercial ASD installations, the procedures are not discussed in further detail here.

- ***Sulfur hexafluoride tracer gas (SF_6)***

With proper apparatus, SF_6 tracer gas can be used to monitor house ventilation patterns on a continuous basis, thus providing more comprehensive ventilation information than is possible with the time-integrated results obtained using PFTs. However, the labor and the equipment required to use SF_6 are so extensive that testing using this tracer gas cannot be afforded outside of a research setting.

A commercial mitigator will never have the need for such continuous ventilation results. As discussed above, a mitigator considering an ASD system will generally not require information on house ventilation rates at all, and thus would not need to conduct even PFT testing, let alone the more elaborate SF_6 testing. Even a mitigator considering a house ventilation approach would consider, at most, the time-integrated PFT measurements (or, more likely, the more approximate blower door approach to estimating house ventilation rates).

Although SF_6 will never be used in the design and installation of a commercial radon mitigation system, a brief review of how it is used is presented here as background, since mitigators will occasionally see references to tests using SF_6.

SF_6 is injected into the house from a compressed gas cylinder. Concentrations in the house air are then measured either using a gas chromatograph located in the house, or by collecting house air samples for chromatographic analysis at a remote laboratory. The SF_6 is utilized by one of three techniques:

- the dilution technique, where the tracer gas is initially brought up to a uniform concentration inside the house, and where the ventilation rate is then determined by observing the drop-off in the concentration over time (generally several hours). A standard method for using the dilution technique has been published (ASTM83).

- the steady state injection rate technique, where the tracer gas is continuously fed into the house at a constant rate, and the ventilation rate is determined by observing the concentration in the house air that is being maintained by this constant feed.

- the constant concentration technique, where the flow of tracer gas into the house is continually adjusted as necessary in order to maintain a constant concentration of the gas in the house. The ventilation rate is determined from the flows of tracer that are required.

US EPA ARCHIVE DOCUMENT

US EPA ARCHIVE DOCUMENT

Section 4
Design and Installation of Active Sub-Slab Depressurization Systems

The discussion in this section draws heavily from the detailed review of available data on active SSD systems, presented in Section 2.3.1.

4.1 Selection of the Number of Suction Pipes

The number of SSD pipes required will depend upon sub-slab communication. In this document, three categories of communication are considered: good, marginal, and poor.

The objective in selecting the number of suction pipes is to maintain adequate sub-slab depressurization everywhere. As discussed in Sections 2.3.1b, 2.3.1e, and 3.3.2, *ideally*, the SSD system should be maintaining the sub-slab depressurization at: any measurable value (about 0.001 in. WG), if depressurization is measured during worst-case conditions of cold weather and exhaust appliance operation; about 0.015 in. WG, if measured during mild weather but with appliances operating; about 0.01-0.02 in. WG, if measured during cold weather without appliances operating; and about 0.025-0.035 in. WG, if measured during mild weather without appliances operating. As has been discussed previously, these are probably conservative figures.

4.1.1 Houses Having Good Sub-Slab Communication

As discussed in Section 2.3.1a (*House size*) and 2.3.1c (*Number of suction pipes*), one or two suction pipes will generally be sufficient for a SSD system to treat essentially any residential basement slab or slab on grade when sub-slab communication is good. This has been demonstrated on houses with slabs as large as 2,700 ft^2 (and on schools as large as 50,000 ft^2). One pipe can be sufficient even when the house has hollow-block foundation walls. When a good layer of aggregate is present, one or two pipes can sometimes be sufficient even in houses where there are sub-slab obstructions such as interior footings or forced-air supply ducts, which could be expected to reduce or interrupt the communication.

Where multiple separate slabs are present in a given house—e.g., when a slab on grade adjoins a basement—it may be advisable to install at least one suction pipe beneath each slab. Installing a suction pipe beneath the adjoining slab on grade (often from inside the basement), in addition to installing a pipe through the basement slab, frequently appears to improve radon reductions throughout the house. However, it is not always necessary for the purpose of reducing concentrations below 4 pCi/L when basement sub-slab communication is good. The possibility of avoiding the need for a pipe beneath the adjoining slab may be improved by installing the basement suction pipe near the stem wall separating the two wings.

Sometimes a second slab will exist on the same level as another, with a footing/foundation wall in between. This situation can occur, for example, when a subsequent slab-on-grade addition has been added on to an older slab-on-grade house, or when the house (as initially constructed) was completely bisected by a load-bearing foundation wall resting on footings beneath the slab. When communication is good beneath both slabs, it may or may not be necessary to install a SSD suction pipe beneath each slab. If local experience does not provide guidance on this matter, the mitigator should perform diagnostics, or should be prepared to add a suction pipe in the second slab if treatment of the first slab proves inadequate by itself.

The decision to install a second (or additional) suction pipe in a given slab in a given good-communication house will be determined by a mitigator's general practices, and by experience with houses in that geographical area. Where there are a number of factors present that suggest the possible need for a second pipe, a mitigator will often find it cost-effective to simply install the second pipe at the outset, or to perform *during*-mitigation suction field diagnostics, as discussed in the introductory portion of Section 3.3, rather than to risk a call-back if an initial one-pipe system does not perform adequately. Factors which, in combination, might suggest the need for a second pipe include:

- a particularly large slab;
- house or geological features which suggest that there will be significant air leakage into the system from inside the house or outdoors, thus increasing air flow and reducing suction field extension, such as:
  - -- significant slab openings which cannot be closed (e.g., a perimeter channel drain partially concealed behind wall finish, or a hollow-block fireplace structure which penetrates the slab);
  - -- block foundation walls which extend above grade in slab-on-grade houses, which can allow outdoor air to flow through the block into suction pipes placed near the perimeter; and

US EPA ARCHIVE DOCUMENT

-- highly permeable native soils, which can allow outdoor air to flow through the soil into the system.

- experience in the geographical area which suggests that even a reasonably good aggregate layer can sometimes be uneven or interrupted, or which suggests that certain obstructions that are observed or suspected (such as forced-air ducts or grade beams/thickened slabs) can significantly degrade SSD performance, despite the presence of good aggregate;

- hollow-block foundation walls;

- a high source term (i.e., soil gas radon concentrations greater than about 2,000 pCi/L), when present in combination with some of the other factors listed here, since failure to adequately treat even a small fraction of the entry routes can be important when soil gas concentrations are very elevated;

- the presence of appliances that might be expected to create significant house depressurization, which might overwhelm the SSD system if sub-slab depressurizations are only marginal.

Clearly, some of the above factors will be more important than others, depending upon the situation. The combinations of these factors which will warrant a second SSD pipe in good-aggregate cases may vary by geographical area.

The procedures for deciding whether a house has "good communication" have been discussed in Sections 3.2 and 3.3.

In general, houses having an uninterrupted bed of aggregate beneath the slab will have good communication. The communication will be especially likely to be good if the aggregate is clean, coarse stone (i.e., without a lot of fine material to block the voids between the larger stones); however, communication will probably be reasonably good even if the aggregate has not been washed and if some fine material is present. As discussed in Section 3.2, the presence of aggregate can sometimes be determined by visual inspection, if it is visible through slab openings, or if the homeowner observed the house during construction and can confirm its presence. The likely presence of aggregate can also often be inferred from local building codes, and from experience with other houses in the area.

Good communication can sometimes exist, at least under parts of the slab, even when aggregate is not present. Such communication can be provided by: a) permeable native soils underlying the slab (such as well-drained gravel soils); b) subsidence of fill material beneath the slab, usually around the perimeter where excavations for the footings were backfilled during construction, leaving an air gap between the soil and the bottom of the slab; and c) insulation board or other such material placed beneath the slab before it was poured, if this material is itself porous, or if air gaps have developed between the material and the slab or soil.

In the absence of aggregate, the mere presence of one of these other three features will not necessarily guarantee sufficient communication to permit effective treatment of the slab with a single SSD pipe, unless vacuum cleaner suction field extension testing confirms that adequate suction field extension can indeed be achieved. Highly permeable native soils can sometimes result in such high air flows from outdoors that multiple suction pipes will be needed (and perhaps that the fan should be reversed to operate the system in pressure, as discussed in Section 2.4.1). Subsidence of backfilled soil cannot be relied upon to be sufficiently complete to permit effective extension of the suction field from a single SSD pipe around the entire perimeter, if communication is otherwise poor. Experience with insulation board beneath the slab is too limited to permit definitive statements about its possible role in improving communication in otherwise-marginal cases.

The presence of a good aggregate layer will not necessarily ensure good communication (i.e., good extension of the measurable suction field) where there are interruptions in the aggregate, e.g., by forced-air supply ducts, or by interior footings or grade beams. However, as discussed in Section 2.3.1a (*Sub-slab obstructions*), one SSD pipe can often still be sufficient, despite these obstructions, if there is otherwise a good layer of aggregate everywhere. The success with a one-pipe system in such cases will depend on the ability of the suction field to extend through or under the obstruction.

Where the nature of the underlying aggregate is unknown, or where the aggregate layer is known to be incomplete, the determination of whether or not the communication is relatively good can be made using the qualitative suction field extension measurement procedure described in Section 3.3.1. Alternatively, a mitigator could decide to proceed with the installation of the first SSD suction pipe, and measure the sub-slab suction field produced by this pipe in deciding upon the nature of the communication and any need for additional pipes (the *during*-mitigation diagnostic approach discussed in the introductory portion of Section 3.3).

4.1.2 Houses Having Marginal or Poor Sub-Slab Communication

Where sub-slab communication is marginal or poor, more SSD suction pipes will be required, as discussed in Section 2.3.1a.

In houses having marginal communication, one suction pipe per 350 to 750 ft^2 of slab area has typically been found to be required, corresponding to 2 to 4 SSD pipes in a typically sized basement slab. In cases where communication beneath the basement slab is this marginal, it will be increasingly important that any adjoining slab on grade wing also be directly treated with additional SSD pipes.

In some extreme cases, sub-slab communication will be so poor that even 2 to 4 SSD pipes will prove to be inadequate. For most mitigators, such truly poor-communication houses will prove to be only a few percent of the local market, although in some regions of the country, such houses may be encountered more frequently. These houses commonly have their foundations built into bedrock, or into a very tight (and sometimes moist) sand, or into wet clay, with no aggregate. Mitigators have reported installing as many as 8 to 11 suction

pipes in such houses, with 20 pipes installed in one house being studied under a research project (corresponding to about 1 pipe per 100 ft^2).

Various steps can be considered to reduce the number of suction pipes in poor-communication cases, as discussed later. These steps include excavation of pits beneath the slab where the pipes penetrate, use of very high-suction/low-flow fans, or perhaps the use of high-pressure air or water jets beneath the slab to drill channels between the soil and the underside of the slab (in an effort to improve communication). But it is clear that, whatever is done, there will be a significantly increased labor effort and/or materials cost involved in installing SSD systems in such houses, and there will likely continue to be a significant number of suction pipes, even if the number can be reduced by the steps just listed. In houses having such poor communication, it would be appropriate to give consideration to mitigation approaches other than ASD, prior to selecting that technology.

As with houses having good communication, houses having marginal or poor communication may have some characteristics that will become apparent during the visual inspection. These can include: a lack of aggregate visible through slab openings; observations by the homeowner that no aggregate was placed during construction; knowledge that building codes or practices at the time of construction did not include use of aggregate; familiarity with the local geology; and experience with other similar houses in the area.

In the absence of such guidance from the visual inspection, the fact that the communication is not good cannot be determined until the qualitative suction field extension measurement is conducted, as described in Section 3.3.1. These qualitative diagnostics would identify whether the communication is good or not good. However, if communication is not good, the qualitative diagnostics might not reveal whether it is marginal or poor. The vacuum cleaner suction might fail to extend to the remote test holes used in the qualitative approach, whether the communication is marginal or whether it is poor, providing no basis for distinguishing between the two. And the qualitative tests would provide no definitive guidance regarding the number of suction pipes required.

Thus, if the qualitative suction field extension testing shows that sub-slab communication is not good, the mitigator has several options:

- If local experience suggests that the communication is probably marginal, rather than poor, proceed to install a two- to four-pipe SSD system without further pre-mitigation diagnostics. Post-mitigation suction field diagnostics would be advisable to ensure that an adequate suction field has been established. The subsequent retrofit of additional pipes into the system might be necessary if the initial two- to four-pipe system proves to be inadequate in reducing radon levels. It might be advisable to install the system with T fittings at appropriate locations to simplify the retrofit of additional pipes if needed.

- Install a one-pipe (or perhaps two-pipe) SSD system, with provisions to add additional suction pipes. Before putting the finish on the installation, operate the system fan and measure the sub-slab suction field developed. Add the number of additional suction pipes needed to achieve the required depressurizations, as indicated in the introductory portion of Section 4.1. This is the *during*-mitigation diagnostic approach referred to earlier, and will provide the most definitive design guidance. It is, by definition, a quantitative diagnostic approach, because the system flows and depressurizations will automatically be equal to the flows and suctions developed by the SSD system.

- Proceed with quantitative suction field extension measurements using a vacuum cleaner, as described in Section 3.3.2, to determine how many suction pipes are needed before the system is installed.

Many (but not all) investigators have observed that quantitative suction field extension diagnostics with a vacuum cleaner tend to over-predict the number of suction pipes needed, as discussed at the beginning of Section 3.3.2, when the proper flows are maintained in the vacuum. As indicated in that earlier discussion, some of the reasons for the over-prediction may procedural errors in conducting the diagnostics or inherent limitations on the ability to reproduce SSD sub-slab depressurizations using a vacuum cleaner. Other possible explanations why fewer-than-predicted suction pipes can achieve good radon reductions are that: a) the higher-flow SSD system is creating a sub-slab ventilation component that the vacuum cleaner cannot reproduce; and b) the goal depressurizations (up to 0.025-0.035 in. WG) are conservative.

If sub-slab suction field measurements are made using any of the three options above, and if "effective radii" (as in Figure 11) are drawn, either figuratively or literally, the interpretation of those results to determine the number of suction pipes must be done in conjunction with the determination of pipe location, discussed in Section 4.2.2. Given that the objective is to achieve proper coverage of the slab with a suction field, there are two alternatives for deciding upon what proper coverage entails.

- *Complete coverage of the slab*. If it is desired to ensure that the selected depressurization is maintained beneath all points of the slab, one would have to identify practical sites for pipes on the house floor plan. Pipes would be distributed among those sites as necessary such that the effective radii overlapped each other and the entire house perimeter, theoretically maintaining the desired depressurization essentially everywhere under the slab. This approach is desired any time that: a) there are important entry routes in the interior of the slab, not just at the perimeter; and/or b) it is not desirable to locate the pipes near the perimeter for one reason or another, e.g., due to local concerns regarding air leakage into the system through perimeter block foundation walls. Due in part to air leakage experienced with perimeter SSD pipes in slab-on-grade houses with very poor communication in Florida, this is the

US EPA ARCHIVE DOCUMENT

approach recommended in Reference Fo90 for such houses.

- *Coverage of perimeter only.* Alternatively, one might decide to place the pipes near the perimeter, since the most common major entry routes (the wall/floor joint and, if present, the hollow-block foundation wall) will be located there. Also, the sub-slab communication will commonly be somewhat better immediately beside the perimeter, due to the excavation and backfill that had to occur in that region when the footings were poured during construction. In this case, the effective radius might be used to select the pipe spacing around the perimeter, to ensure that the desired sub-slab depressurization is maintained at all points around the perimeter. By this approach, if the effective radii did not extend sufficiently far to adequately depressurize the entire interior portion of the slab, it might be decided to leave that interior portion not fully treated, with the assumption that there are no major entry routes there.

Many mitigators and researchers focus on the perimeter treatment approach in many instances (Sc88, Tu91b, Gad92, Kl92, Mes92).

4.2 Selection of Suction Pipe Location

4.2.1 Houses Having Good Sub-Slab Communication

When sub-slab communication is good, the location of the one or two suction pipes can be fairly flexible.

One primary consideration in location selection will be the convenience of the home-owner. This criterion will generally dictate that the pipes be located in unfinished space, such as the unfinished portions of basements, or in utility rooms or workshops in otherwise-finished basements and slabs on grade. If no unfinished space is available, the pipes can be located inside closets. The pipes should be located so that they do not interfere with occupant traffic patterns, i.e., they should generally be near other already-existing obstructions, or near walls. If the homeowner has plans to finish a portion of a currently unfinished basement, or otherwise has preferences regarding pipe location, these factors would also influence site selection.

One-pipe SSD systems do not require that the single pipe be centrally located. If necessary, the pipe can usually be at one end of the house, near the perimeter wall. Where two pipes are used, it would be appropriate to space them as uniformly as possible. For example, if half of a basement is unfinished, it would generally be logical to locate both pipes in the unfinished portion (one pipe at one end of the house, the second near the central wall dividing the finished and unfinished portions). But if only one room is unfinished, it will be necessary to locate the second pipe in a finished portion of the slab.

The routing of the exhaust piping will often play an important role in locating the suction pipe. For example, if the exhaust piping is to be routed from a basement into an adjoining slab-on-grade garage and then through the garage roof, it would be logical to insert the suction pipe through the basement slab at a convenient location near the wall adjoining the garage, in order to reduce the length of the horizontal piping run. Or, if the exhaust is to be routed up through an existing utility chase, the suction pipe might be located near that chase.

Factors associated with the slab could play a role in locating the pipes. If an unfinished sump pit is present, for example, a pit with no drain tiles or sump pump, hence not providing an opportunity for sump/DTD, and if this pit is to be used as a ready-made hole through the slab for a SSD suction pipe, this would clearly dictate suction location. Observed or reported sub-slab utility lines, or areas having heating coils built into the slab, could rule out certain parts of the slab, to avoid damaging these utilities when drilling through the slab. However, some mitigators recommend deliberately locating suction pipes near sub-slab utility lines when there are interior footings or other sub-slab obstructions (Bro92, Kl92); the channel excavated for the utility line may penetrate through the obstruction, thus providing an avenue for the suction field to extend through the obstruction.

If a given house has multiple slabs, each having good communication, it may be desirable (although not always necessary) to locate a suction pipe in each slab, as discussed in Section 4.1.1. One such case would be a basement house having an adjoining slab on grade. Location of the basement suction pipe near to the stem wall between the two wings may reduce the likelihood that a separate pipe will be needed to treat the adjoining slab.

Where more than one suction pipe is planned, it would be desirable to locate the pipes so that they can most conveniently be manifolded together, if possible, so that they could be connected to a single fan.

The desirability of locating a suction pipe in a garage depends upon how well the garage slab communicates with the living-area slab. For example, in basement houses where the garage is on the same level as the basement, the garage slab and the living-area slab may be integral; such houses are effectively walk-out basements, with the garage being the grade-level portion of the basement. In such cases, the suction pipe can be placed in the garage with no penalty. But as another example, slab-on-grade houses having attached slab-on-grade garages commonly (by code) have the garage slab offset several inches below the living-area slab, sometimes with a footing/stem wall between the two slabs. Even when both slabs were poured at the same time, the communication between the two may be uncertain. In these cases, a suction pipe in the garage may not be fully effective in treating the living area unless the pipe is installed to draw suction beneath the living-area slab, as discussed in Section 4.5.6.

It would generally be good practice to locate the suction pipes toward suspected important entry routes to help ensure effective treatment of those routes, when this can be done without

US EPA ARCHIVE DOCUMENT

resulting in undue air leakage into the system. While this is generally good practice, it is not always necessary in good-communication cases, since the suction field will tend to extend to that entry route even when the suction pipe is remote. For example, in a walk-out basement, the front wall may be completely below grade while the rear wall is completely above grade; it would be logical in this case to locate the suction pipe toward the below-grade wall. Or if there is a block fireplace structure in the middle of the slab which penetrates the slab and rests on footings underneath, it might be appropriate to bias the pipe toward that structure (although not necessarily to place the pipe immediately beside the structure).

However, where the entry route is a major opening, it would be best to try to close this opening rather than attempting to treat it, without closure, by placing a SSD suction pipe nearby. For example, locating a suction pipe near to an unclosed perimeter channel drain could result in substantial house air leakage into the system, potentially preventing the suction field from effectively extending to more remote points under the slab while also increasing the house heating/cooling penalty.

Suction pipes are commonly installed vertically down through the slab from inside the house, such as shown in Figure 1. Alternatively, the pipes can be inserted horizontally through the foundation wall from outdoors, just below slab level, such as illustrated in Figure 2. Vertical interior pipes will typically be preferred for basement slabs, due to the depth of excavation that would be necessary to get below slab level from outdoors. However, where the basement slab is very highly finished, horizontal extension of the pipe beneath the footing from outdoors is sometimes preferred for aesthetic reasons (Kl89). In slab-on-grade houses, where the slab is near to grade level, vertical pipes inside the house are often still preferred, especially in one-story houses with attics. In these cases, penetration of the SSD pipe up through the ceiling and into the attic provides a convenient exit route for the exhaust piping which is more aesthetic than the exterior fan and stack that a penetration from outdoors could necessitate.

Horizontal penetration of the SSD pipe from outdoors will most commonly be applied in slab-on-grade houses where it is not desired to take an exhaust stack up through the house and through the roof. Good examples are houses with a flat roof and no attic (a feature characteristic of the Southwest), and houses with a cathedral ceiling. But as indicated above, penetration from outdoors can be used in any slab-on-grade or basement house where, due to interior finish, it is desired to keep all piping outdoors.

If the suction pipes are to be installed horizontally from outdoors, the location of the wall penetrations would be selected based upon:

- Aesthetics. Any horizontal suction pipe that is to be above grade should preferably be in the rear of the house, away from the street.
- Accessibility. The presence of driveways, patios, landscaping, etc., immediately beside the house would complicate access to the foundation wall.
- The possible presence of sub-slab utility lines in the vicinity.
- The desired spacing between suction pipes, if there are to be more than one, and the possible need to treat multiple slabs, if present.

Horizontal penetration of the suction pipe through the foundation wall is also widely used in cases where a slab-on-grade wing adjoins a basement. In these cases, suction pipe(s) to treat the adjoining slab on grade are inserted horizontally through the stem wall from inside the basement, just below the adjoining slab. This piping is then commonly manifolded together with the vertical interior suction pipe(s) penetrating the basement slab, and connected to a single fan. Treating the adjoining slab with a horizontal penetration from inside the basement is usually simpler, less expensive, and more aesthetic than the options of installing a vertical pipe inside the finished living area on the upper slab, or of installing a horizontal pipe from outdoors. It also facilitates tying together the piping treating the upper and lower slabs into a single-fan system.

Many mitigators prefer locating suction pipes near the slab perimeter. The perimeter is often the most aesthetic location and the most convenient for the occupant. In many cases, it may also be the best location from the standpoint of radon reduction; the suction field may extend effectively around the perimeter, treating this region having the highest radon entry potential. (This latter point may be less crucial in good-communication cases, where the suction field is likely to extend effectively around the perimeter regardless of pipe location.)

A concern has been raised that location of pipes near the perimeter of slabs at grade (slab-on-grade houses, or the grade-level side of walk-out basements) could permit substantial amounts of outdoor air to flow into the system through block foundation walls or through the soil beneath shallow footings, interfering with suction field extension (Fo90, Kl92). This could be a potential problem either with horizontal/exterior pipes, which will almost always be near the perimeter of a grade-level slab, or with vertical/interior pipes that are located near the perimeter. However, as discussed in Section 2.3.1c *(Location of suction pipes),* experience suggests that when sub-slab communication is good, perimeter location of SSD pipes in such slabs does not generally appear to present a sufficiently severe air leakage problem to seriously impact SSD design or performance, even with block foundations that extend above grade. Perhaps leakage would become more of a problem in cases where the underlying native soil is highly permeable (e.g., well-drained, gravel soils). The problem with perimeter location in such houses appears to arise when communication is *not* good.

It would thus appear that mitigators do not have to feel constrained against perimeter placement of SSD pipes in grade-level slabs having good communication. However, for

US EPA ARCHIVE DOCUMENT

safety's sake, it may still be desirable to locate the pipes away from grade-level perimeters, especially with block foundations and shallow footings, if another location is available which is also convenient.

4.2.2 Houses Having Marginal or Poor Sub-Slab Communication

Location of the SSD suction pipes will become more important when communication is marginal or poor, because favorable sub-slab characteristics can no longer be relied upon to extend the suction field to the places where it is needed most. Thus, it is more important that the pipes be located near the major soil gas entry routes. (However, if the entry route is a significant opening that cannot be at least partially sealed, the suction pipe should not be so near that excessive air leakage into the SSD system results.)

In particular, major entry routes include the perimeter wall/floor joint, the wall/floor joint where any interior load-bearing wall (or fireplace structure) penetrates the slab, and hollow-block foundation walls, where present. Thus, except perhaps in *some* cases involving grade-level slabs, discussed later, it would appear generally desirable to locate the suction pipes near the foundation walls, where the radon entry potential is usually the greatest. The pipes should be about 6 in. away from the walls, perhaps a little further in some cases, just far enough away to avoid the footings and to provide space for operating any equipment (such as a coring drill) required to prepare the hole through the slab. Location of the pipes in this manner reflects emphasis on the approach referred to as *Coverage of perimeter only*, discussed at the end of Section 4.1.2.

Locating the pipes near the foundation walls has another advantage, in addition to being near the major entry routes. In poor-communication houses, the sub-slab communication is likely to be best around the perimeter. Even if much of the slab is poured on undisturbed, impermeable native soil or bedrock, some excavation and back-filling would have had to have taken place when the footings were poured. This back-filled soil is likely to be more permeable than the undisturbed soil, and may even have subsided, creating an air gap between the soil and the underside of the slab. Thus, a suction pipe located in this region may be able to treat a much greater length of the perimeter than would be predicted by the effective suction radius determined from quantitative suction field extension diagnostics conducted in the middle of the slab.

In houses with marginal communication where two suction pipes are felt to be needed, one logical configuration would be to place the one pipe near the middle of each of two opposing walls, if these pipes can then conveniently be manifolded together. Such manifolding of remote pipes will be most convenient in certain cases, such as: vertical/interior pipes in unfinished basements; vertical/interior pipes in slabs on grade where horizontal runs to connect the pipes can be made in the attic; or horizontal/exterior pipes where the pipes can be connected via a buried loop of piping around the house perimeter outdoors. Where such manifolding is not convenient, the mitigator might wish to try pipes on two adjacent walls. In houses where four pipes are needed, one logical configuration would be to place one pipe near the middle of each perimeter wall, in an effort to best distribute the suction.

In some cases, there may be important entry routes toward the interior of the slab, such as fireplace structures which penetrate the slab, extensive slab cracking, etc. In these cases, it may be desirable to place one or more of the pipes at an interior location, near these entry routes. Likewise, if there is a load-bearing interior foundation wall which penetrates the slab and rests on footings, this interior foundation wall may require a pipe nearby, just as in the case of the perimeter foundation walls.

In the few percent of houses where sub-slab communication is truly poor, rather than just marginal, one pipe beside each perimeter wall (and beside major interior routes), as just discussed, may be inadequate. In these cases, suction pipes can be spaced around the perimeter at the intervals required to maintain the desired sub-slab depressurizations (as summarized in the introductory portion of Section 4.1) at the perimeter, consistent with the *Coverage of perimeter only* approach in Section 4.1.2.

If quantitative suction field diagnostics have been performed, the pipes can be positioned so that the effective suction radii (as discussed under *Interpretation of results* in Section 3.3.2) overlap around the perimeter. This approach assumes that the sub-slab communication around the perimeter is the same as it is at the location where the suction field extension diagnostics were conducted, which may well have been toward the slab interior; this is probably a conservative assumption. Or, the mitigator could utilize the *during*-mitigation diagnostic approach, installing the first few SSD pipes, measuring perimeter sub-slab depressurizations with the system fan operating, and then continuing to add pipes at the necessary locations until the desired depressurizations are achieved everywhere around the perimeter.

By the above method, no attempt is made to ensure that the suction also covers the entire interior of the slab (the *Complete coverage of the slab* approach in Section 4.1.2), unless there are apparent significant entry routes there.

But where the slab is above grade, with a hollow-block foundation/stem wall and/or shallow footings, it may sometimes be desirable to locate the suction pipes away from the perimeter *when communication is poor*. In such cases, the *Complete coverage of the slab* approach may be necessary. Where this approach is necessary, the pipe locations can again be selected based either on quantitative diagnostics or during-mitigation diagnostics, as above, except that now the objective is to achieve adequate depressurization everywhere.

The possible need to locate pipes away from the perimeter in poor-communication slab-on-grade houses with shallow block foundations is based upon experience in slab-on-grade houses in Florida (Fo90, Fo92), and is supported by some experience in Arizona and southern California (Kl92). In some of the Florida cases, perimeter locations provided lesser radon reductions than did pipes more toward the interior, suggesting that the benefits of perimeter placement were being outweighed by the disadvantage of increased outdoor air leakage

US EPA ARCHIVE DOCUMENT

into the system through the stem wall or through the soil under the footings. However, perimeter placement will not *always* be ruled out in such houses. In New Mexico, where communication was also very poor, with slabs above grade and block foundations, good radon reductions were achieved with perimeter pipes (Tu91b). The more favorable results apparent in New Mexico may be due, in part, to the fact that the source term was much lower there than in Florida.

If it were desired to locate the suction pipe toward the interior when inserting the pipe horizontally through the foundation wall from outdoors, it would be necessary to auger horizontally beneath the slab for some distance. This would add to the complexity and cost, and would increase the risk of hitting sub-slab utility lines. In most cases where the suction pipe must be located toward the interior, it will probably be preferred to use vertical/interior suction pipes.

In some cases where sub-slab communication is poor or uneven, the slab may in effect be divided into segments, with a suction field in one segment not effectively extending into adjoining segments. In these cases, it would be desired to install at least one suction pipe in each segment. The qualitative and quantitative suction field extension diagnostics described in Section 3.3.1 and 3.3.2 might provide some indication of the presence and location of these segments. However, it is likely that the number of test holes (and the single vacuum cleaner suction point) will be inadequate to map the sub-slab characteristics sufficiently completely. The suggestion given previously, that suction pipes be placed beside two to four of the perimeter foundation walls (and near any major unclosed interior entry routes), should generally help ensure that all such sub-slab segments will be treated. However, in cases where this does not occur, it will be necessary to conduct post-mitigation diagnostics, as discussed in Section 11, to identify the areas of the slab not being adequately treated.

In addition to the above considerations regarding the placement of SSD suction pipes in marginal- or poor-communication houses, the constraints which pertain to placement in good-communication houses also apply. As discussed in Section 4.2.1, among these constraints are:

- Location of the pipes in unfinished space or in closets.
- Location of pipes so that they do not interfere with occupant traffic patterns (which should be achieved if they are near the perimeter walls, as discussed above).
- Location of pipes to facilitate the manifolding of the multiple pipes together, if possible, and to facilitate the routing of the system exhaust.
- Location of pipes away from sub-slab utility lines. [Some mitigators recommend location of the pipes *near* such lines, since improved communication may be found in the sub-slab trench that was excavated for these lines, and since the lines may penetrate sub-slab obstructions such as interior footings (Bro92, Kl92)].
- Location of pipes in garages only in cases where it is known that these pipes will communicate with the region beneath the basement or living-area slab, or when the pipes are installed in a manner which will treat the livable-area slab (Section 4.5.6).
- Insertion of pipes either vertically from indoors, or horizontally from outdoors.

In houses having multiple slabs, the need to have suction pipes beneath each slab is increased when communication is marginal or poor. Quite possibly, multiple pipes will be needed for each slab.

The discussion in Sections 4.1.2 and 4.2.2 focuses on careful selection of the number and location of suction pipes as a means for successful application of SSD to marginal- and poor-communication houses. Other approaches can also be considered in an effort to reduce the number of suction pipes required. These other approaches include:

- Methods for improving the performance of a given suction pipe, given the marginal or poor communication. Such methods include: excavating a larger pit beneath the slab at the point where the pipe penetrates, to further reduce pressure losses and to intersect additional fissures/permeable strata not in direct contact with the underside of the slab (see Section 4.5.1, *Excavating a pit beneath the slab);* using a higher-suction fan, capable of developing suctions as great as 25-40 in. WG under the low-flow conditions commonly observed in poor-communication houses (see Sections 4.4.2 and 4.4.3); or possibly mounting two mitigation fans in series, to increase suction. More comprehensive pre-mitigation suction field extension measurements, to more completely map the sub-slab region and thus permit more informed selection of pipe number and location, might also be considered as a method in this category.
- Methods for improving the communication. One developmental method that has been explored experimentally has been the use of high-pressure air or water jets beneath the slab, in an effort to drill channels between the soil and the underside of the slab. (Note that water jets should never be used where the underlying soil is an expansive clay.)

It is emphasized that each of the above methods will involve some effort and cost, which will at least partially offset any savings that might be achieved by reducing the number of suction pipes or facilitating their placement. But in very poor-communication cases, one or more of these measures may be needed, in addition to multiple pipes, in order to practically achieve adequate radon reductions.

4.3 Selection of Suction Pipe Type and Diameter

4.3.1 Type of Suction Pipe

Rigid, non-perforated polyvinyl chloride (PVC) piping is the standard piping used in the industry, being readily available and having the structural integrity suitable for this application.

US EPA ARCHIVE DOCUMENT

In some cases, rigid, non-perforated polyethylene (PE) piping or acrylonitrile butadiene styrene (ABS) piping have also been reported to have been used, having an appearance and physical characteristics generally similar to PVC piping. Where PE or ABS piping is used, it must be noted that the PVC cement used to join PVC piping and fittings can be ineffective on these materials. The fittings must be of the same material as the piping, and the appropriate cleaning solvents and adhesives for that material must be used to join the pipes and fittings.

In cases where the suction pipes are being inserted horizontally from outdoors, some mitigators have reported using flexible corrugated polyethylene or polypropylene piping (similar to drain tiles, but not perforated) for horizontal runs below grade outdoors, due to ease of installation in this situation (Kl89, Kl92). This flexible non-perforated piping has been used: to extend horizontally through the foundation wall in slabs on grade, as in Figure 2; as a manifold connecting multiple horizontal suction pipes of the type shown in Figure 2; and, in basement houses, to extend beneath the footing into the sub-slab region from outdoors.

In cases where an exhaust stack extends above the eave the outside of the house, many mitigators 3- by 4-in. aluminum downspouting (or mock PVC downspouting having a 3.5-in. square cross-section) for the exterior stack, for aesthetic reasons. Regular 2- by 3-in. aluminum downspouting has sometimes been used also, but creates a substantial back-pressure.

Other types of ducting are not advised for SSD systems. Flexible ducting and flexible clothes drier hose should never be used in any part of the system. This type of hose is subject to being torn, and can sag, creating a site for accumulation of condensed moisture. Also, it can be difficult to obtain sufficiently gas-tight joints with this hose.

Many mitigators use thin-walled PVC piping, rather than thicker-walled Schedule 40 piping. The thin-walled piping provides significant savings in materials costs (He91c), although the amount of this savings will vary around the country depending upon the local market. Labor time may be reduced somewhat because the thin-walled piping is lighter (and thus easier to handle), and much easier to cut. Also, it is somewhat flexible, allowing it to be flexed slightly to simplify its installation (e.g., in aligning it simultaneously through a cored hole in the slab and through a hole in the ceiling above). The quality of thin-walled piping and fittings can vary significantly (Bro92); mitigators using thin-walled piping should locate a source of high-quality material.

The Schedule 40 piping has the advantage of greater structural integrity, and should be considered in cases where the piping may be subject to physical impacts, or where the increased rigidity of the heavier pipe is desired. While many mitigators use thin-walled pipe extensively, considering it to be sufficiently strong and durable for this application, others refuse to use anything other than Schedule 40 due to its increased durability. Some fittings, such as the 6-to-4-in. bushing discussed later as an option for supporting the suction pipe at the slab, are available only in Schedule 40. In some locations, Schedule 40 is now required for mitigation systems in specific applications, such as new construction (Kl92).

At least two types of Schedule 40 PVC piping are available: pressure-rated (solid PVC); and foam-core, suitable for waste, drain, and vent use (Kl92). The Schedule 40 foam-core piping and fittings are much less expensive than the pressure-rated material, provide better durability than the thin-walled piping, and offer some of the same advantages as the thin-walled in terms of being easier to handle and cut than the pressure-rated Schedule 40.

Thin-walled piping does not fit properly into Schedule 40 fittings (joints, elbows, tees), and vice-versa (Fo90, Bro92, Mes92). The mitigator should not attempt to mix PVC piping and fittings of different weights.

Resistance to ultraviolet (UV) radiation over years is a general concern for PVC piping located outdoors (e.g., in exterior stacks). Eventually, the pipe exposed to sunlight will become brittle and crack if not properly protected. This concern is greatest for thin-walled piping. Any length of PVC piping located outdoors should be painted, regardless of weight, or coated with a UV protectant. Due to UV degradation, no significant length of thin-walled piping should be used outdoors even with a coating.

4.3.2 Diameter of Suction Pipe

Two factors are considered in selecting the diameter of the piping used in SSD systems.

- First, the pipe should be of sufficiently large diameter such that there is not excessive suction loss resulting from air flow through the piping. The suction loss for a given length of piping, which results from friction between the gas and the pipe wall, increases as the air velocity increases. For a given air flow rate (in cfm), velocity increases as pipe diameter decreases. Thus, the smaller the pipe diameter, the more of a given fan's suction capacity will be consumed in moving air/soil gas through the piping, and the less will be available to maintain suction beneath the slab.

  Likewise, the pipe should be sufficiently large so that the velocity is low enough to avoid excessive flow noise inside the pipe and noise where the exhaust jet is released. Mitigators report that flow noise and exhaust jet noise tends to become objectionable when it gets as high as 1,000-1,500 ft/min, which would correspond to roughly 90-130 cfm in a 4-in. diameter pipe. The flow noise can become a problem at even lower velocities when the pipe is routed through a bedroom closet. Noise problems will be the worst at fittings, such as elbows and size reducers.

- Second, the pipe should be of sufficiently small diameter to reduce aesthetic impact and to facilitate installation.

Typically, flows in SSD systems are in the range of 20 to 100+ cfm when operating with one of the commonly utilized 50- to

90-watt centrifugal in-line tubular fans mounted in 4-in. piping, although individual installations will be encountered outside that flow range.

Figure 13 shows the suction loss per 100 ft of piping as a function of the flow rate, with pipe diameter as a parameter, calculated using standard fluid dynamic equations as presented in Reference Ca60. This calculation assumes smooth-walled pipe having average wall friction. The flexible corrugated polyethylene or polypropylene piping, with a corrugated wall, would have much higher suction losses (about 1.8 times as high, according to Reference Kl92).

In practice, most mitigators usually use 4-in. diameter PVC, PE, or ABS piping in SSD systems, except in cases where the mitigator routinely encounters very low-flow situations, or where space limitations (such as the need to fit the pipe inside a stud wall) dictate the use of smaller-diameter piping. Four-in. piping represents a reasonable compromise between the two factors listed above. It is sufficiently wide to limit suction losses and flow noise to reasonable levels even in cases where actual flows are at the upper end of the commonly observed range for SSD systems, as discussed below. It is also wide enough to keep flow velocities below the value at which flow noise is reported to become a problem, except perhaps at the highest SSD flow rates. It is sufficiently small to not be too obtrusive; and it resembles some of the sewer piping which may also be visible in some basements. It is readily available as either thin-walled piping or as Schedule 40, and it is reasonably easy to handle.

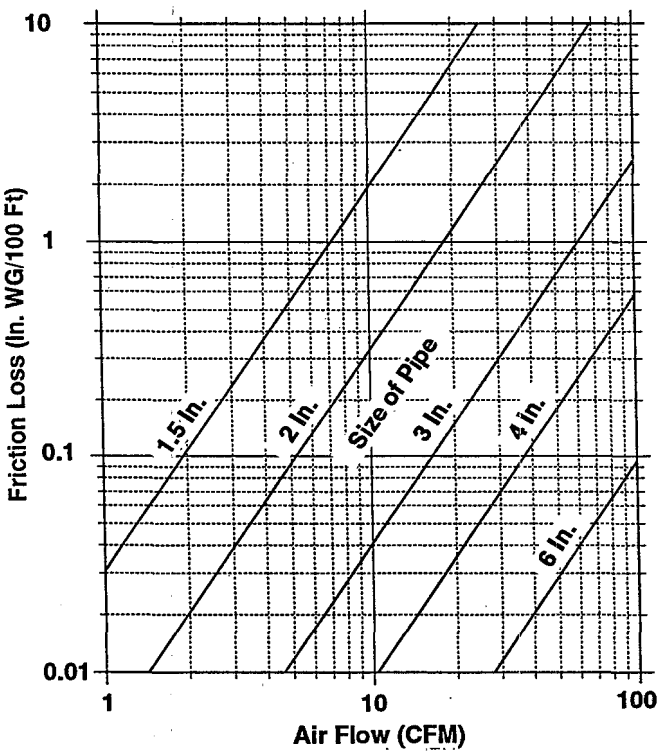

Figure 13. Suction loss per 100 linear ft of straight piping, as a function of gas volumetric flow rate and pipe diameter, for circular pipe having smooth walls. (Derived from Reference Ca60.)

The detailed procedure for estimating system suction loss is discussed later, in Section 4.6.1. For the purposes here, it is sufficient to assume that the equivalent length of piping for an example system is about 70 ft (consisting of about 35 ft of straight piping total upstream and downstream of the fan, plus two mitered 90° elbows adding a flow resistance equivalent to about a 35-ft length of straight 4-in. piping). As shown in Figure 13, in the typical range of SSD volumetric flow rates observed in reasonably good-communication houses with standard 50- and 90-watt tubular fans (about 20 to 100 cfm), friction losses are roughly 0.03 to 0.6 in. WG per 100 ft of straight 4-in. pipe. For the example piping configuration with 70 linear ft, the total loss would be in the range of 0.02 to 0.4 in. WG. These losses can be handled by the 90-watt in-line fans, which develop 1 to 1.5 in. WG static pressure or more at those flow rates. Except at the highest flows (which the 50-watt fans probably would not generate), the friction losses can also be handled by the 50-watt in-line fans, which develop suctions of 0.4 to over 0.75 in. WG at these flows. These figures thus confirm the reasonableness of selecting 4-in. diameter piping in the typical case.

Three-in. diameter piping is useful for any portion of the piping run that must be located inside stud walls. The 2-in. by 4-in. studs will not provide a gap between the sheets of sheetrock large enough to accommodate a 4-in. diameter pipe, but 3-in. piping will fit conveniently. The 3-in. piping will have a greater suction loss than the 4-in. piping, as indicated in Figure 13. And the velocity at which flow noise is expected to become objectionable occurs at a flow rate of about 50-75 cfm with 3-in. piping, a flow range which might commonly be achieved.

Using the procedure discussed in Section 4.6.1, a mitigator would have to calculate the impact of a given length of 3-in. piping in any particular system under consideration. From Figure 13, with 3-in. piping, the friction losses at 20 to 100 cfm range from roughly 0.15 to 2.5 in. WG per 100 ft of pipe. (In fact, with 3-in. piping, the flow range would be lower than 20-100 cfm, due to the increased suction loss.) Using the example system considered previously for the 4-in. case (35 ft of straight piping plus two elbows, which now has a resistance equivalent to 60 ft of straight 3-in. piping), the total loss in the system would be 0.09 to 1.5 in WG. At the lower flows (giving 0.09 in. WG suction loss), both the 50- and 90-watt fans (which develop 0.75 and 1.5 in. WG, respectively, at those flows) could easily tolerate the entire system being installed with 3-in. piping. However, at the higher flows, where the two fans sustain suctions of about 0.4 and 1 in. WG, respectively, the 1.5 in. WG suction loss resulting when the entire system consists of 3-in. pipe could not be tolerated. As a result, use of 3-in. piping throughout would cause both the system flows and the sub-slab depressurization to be reduced with either the 50- or 90-watt fan. The impact on flows and sub-slab depressurizations at the higher flows would be less if a 110- to 140-watt in-line radial blower, recently on the market (Ra92), were used (see Section 4.4.2).

US EPA ARCHIVE DOCUMENT

Rather than constructing the entire example system out of 3-in. pipe, one might use 4-in. pipe for much of the system, and, say, use 20 ft of straight 3-in. pipe (and a 4-to-3-in. reducer) for the segment that extends up between the stud walls. In this case, the suction loss for the total system over the range of 20-100 cfm would be about 0.1-0.8 in. WG. Most of this range could be tolerated by the 90-watt fan, except perhaps at the highest flows, and part of it could be tolerated by the 50-watt fan.

It must be recognized that if the suction loss becomes too high for the fan to handle at the assumed flows, the effect will be that the system flows will drop, and the fan will operate at a different point on its performance curve. As a result of this drop in flows, sub-slab depressurizations will also drop. Since SSD systems in good-communication houses are sometimes over-designed anyway, this drop in flows and sub-slab depressurizations may not be serious in terms of radon reduction performance.

In view of the above discussion, it is believed that if the sub-slab communication is good and if a 90-watt fan is utilized, a segment of 3-in. piping in the system (or sometimes even use of 3-in. piping throughout the system) will be acceptable unless the flows are in the upper part of the range and/or the segment of 3-in. piping is long. That is, the increased suction loss created by this smaller piping may be accommodated by the 90-watt fan, so long as the sub-slab communication is good enough such that high sub-slab depressurizations do not have to be maintained at the suction hole.

Three-in. piping is slightly less expensive than is 4-in. piping of the same weight, and is a little easier to handle, because a worker's hands will easily fit around its circumference (He91b, He91c). However, 3-in. piping and fittings are less readily available in some areas. Also, a mitigator who stocks primarily 4-in. piping will encounter some additional time requirements in planning for the use of 3-in. piping in a single installation, and in procuring the proper amount of the smaller pipe.

In poor-communication cases where flow is very low—on the order of about 10 cfm or less per suction pipe—1.5- to 2-in. diameter piping has sometimes been used, to facilitate installation and improve system aesthetics. At such low flows, system suction losses and flow noise should not be a problem. However, as discussed below, if flows became as high as 25-35 cfm, suction losses could become unacceptable for many fans, and flow velocities would surpass the 1,000-1,500 ft/min value at which noise can become objectionable.

From Figure 13, the friction loss in 2-in. piping at a flow rate of 10 cfm is roughly 0.3 in. WG per 100 ft. For the example system considered above (35 ft of piping plus two elbows, now having a flow resistance equivalent to 52 linear ft of 2-in. piping), the system loss (assuming the entire system consists of 2-in. piping) would be 0.15 in. WG. This loss can be handled by the standard 90-watt centrifugal tubular fans (which can develop about 1.5 in. WG static pressure at 10 cfm), the 110- to 140-watt in-line radial blowers (which develop 2.5 to 4 in. WG at this flow), and the high-pressure/low-flow fans (capable of about 20 to over 40 in. WG at this flow). However, at 35 cfm, the friction loss in the 2-in. piping rises to about 3 in. WG per 100 ft, or about 1.5 in. WG for the 52-ft example system. The loss in the example system is about equal to the total static pressure that can be developed by the 90-watt in-line fans at 35 cfm; it is also greater than the static pressure that can be developed by many of the high-pressure/low-flow fans at this flow rate, which is higher than many low-flow fans are designed to handle. The loss could be handled by the 140-watt in-line radial blower, which reportedly generates almost 3.5 in. WG at 35 cfm (Ra92).

Thus, with essentially all of the 90-watt and higher-powered fans, 2-in. piping can be considered for individual SSD suction pipes in poor-communication houses, if desired for convenience or aesthetic reasons, when flows in the riser are in the range of 10-20 cfm and less. Where flows are sufficiently low and the fan suction sufficient great, analysis analogous to that in the preceding paragraph indicates that 1.5-in. piping can also be considered.

Systems in houses having poor communication often consist of a number of suction pipes connected to a manifold pipe, which in turn leads to a single fan. As indicated above, 1.5- to 2-in. piping may be satisfactory for the individual suction pipes, which may be contributing less than 10 cfm apiece to the system. However, the manifold pipe, which will carry the combined flow from all of the suction pipes, should probably be 4-in. piping, if the combined flow is greater than roughly 25-35 cfm (depending upon the fan/blower performance curve and the length of piping).

As implied in the preceding discussion concerning the example piping configuration, suction losses in the system for a given pipe diameter will depend not only on the length of straight piping, but on the number and type of fittings in the network (e.g., elbows, tees, 6-to-4-in. reducers). These fittings create a flow resistance/suction loss equivalent to certain lengths of straight piping. Depending upon the number and type of fittings, the fittings can sometimes be a more important contributor to suction loss than is the straight piping. The method of using Figure 13 to calculate the total suction loss in different piping systems is presented in more detail in Section 4.6.1, in connection with design of the piping network.

If flows have been measured during pre-mitigation suction field extension testing (as described in Section 3.3.1 and 3.3.2), or if more extensive sub-slab flow measurements have been made (as described in Section 3.5.1), the mitigator will have an early indication of whether the system is likely to be moderate- to high-flow (suggesting the need for 3- to 4-in. piping), or if it is likely to be very low-flow (in which case 1.5- to 2-in. piping can be considered, if desired). In some cases, the likelihood that a house may present a very low-flow case will be apparent to a mitigator prior to any diagnostic testing, based upon the visual survey and upon experience in the geographical area.

4.4 Selection of the Suction Fan

The fan must be able to maintain an appropriate suction in the piping (and hence beneath the slab) at the flows encountered

US EPA ARCHIVE DOCUMENT

in the system. Thus, the appropriate fan for a given system will depend upon the flow characteristics of the sub-slab and the difficulty expected in achieving an adequate suction field distribution.

Tubular fans. While many commercially available fans and blowers might be considered for use in mitigation systems, the most widely utilized fans to date are centrifugal in-line fans, typically rated to draw 50 to 90 watts maximum. These fans are referred to in this document as tubular fans, consistent with the terminology used in the heating, ventilating, and air conditioning industry (ASHRAE88). Because of their widespread use, in-line tubular fans are the type of fan illustrated in the various figures in this document.

Where sub-slab communication is good, the smaller 50- to 70-watt tubular fans will sometimes give adequate sub-slab depressurizations, if flows are not real high. However, in general, the 90-watt fans are recommended for use in any house having good or marginal sub-slab communication, because of their ability to generate relatively high suctions (generally 1 to over 1.5 in. WG) over the full range of flows observed in SSD systems (20 to 100 cfm). The 90-watt tubular fans have also been applied successfully in houses having poor sub-slab communication, although the flows in such houses are often so low that the fan would not be operating at an optimum point on its performance curve.

High-suction/low-flow blowers. In poor-communication houses, where system flows can be very low, and a high suction might aid in extending the suction field beneath the slab, high-suction regenerative or high-speed centrifugal blowers have been used in some cases. High-suction blowers that have been specifically designed for radon mitigation applications can develop suctions as high as 5 to 50 in. WG at the low flow rates commonly encountered in poor-communication systems (around 20 cfm) (Pe90, Ra92). The purchase price of these high-suction blowers is much greater than that of the standard centrifugal in-line tubular fans, and their power consumption is much higher (about 200-300 watts maximum). These high-suction blowers are not configured for in-line use, and thus have a different appearance from the fans illustrated in this document.

Success with the use of these blowers has been reported in a number of installations (Cra91, Py92, Zu92). According to the manufacturers, a fair number of these blowers have been sold (Zu92). However, a rigorous comparison has not been conducted of the effectiveness of the high-suction blowers vs. the 90-watt tubular fans in poor-communication installations.

A potential problem with some of these high-suction blowers is that they are designed for low flows, with maximum flows often no higher than 25-50 cfm. If flow increases after installation (e.g., due to development of new air leaks through the slab), the blower may be overwhelmed and suction may drop to low values. Some users also report that these blowers can be noisier than the tubular fans.

In-line radial blowers. A series of in-line radial blowers designed for radon mitigation applications has recently come on the market, offering a performance curve intermediate between the 90-watt tubular fans and the high-suction/low-flow blowers. Unlike the high-suction blowers, these new blowers reportedly can handle the higher flows sometimes observed in SSD systems, being able to maintain suctions of almost 1 in. WG at flows of 100 cfm, similar to the 90-watt fans. But these blowers can reportedly develop suctions of over 2 to 4 in. WG as flows drop, compared to the 1.5+ in. WG maximum with the 90-watt fans. These in-line radial blowers could thus be a reasonable choice in marginal- or poor-communication houses.

However, the radial blowers use somewhat more power than the 90-watt fans (95 to 140 watts maximum), and they are somewhat more expensive to purchase (although the least powerful radial model is comparable in price to the 90-watt fans). Their performance (in terms of reliability, durability, and noise levels) has not been as widely demonstrated as it has for the tubular fans, although the manufacturer claims that a large number have been successfully installed to date.

The radial blowers have an appearance similar to that of the in-line tubular fans.

Basis for fan/blower selection. In the large majority of cases, the fan will be selected based upon experience in other houses in the area. If sub-slab aggregate is observed during the visual inspection (Section 3.2) or is known to be present, communication will be good. In this case, flows are more likely to be toward the middle or upper portion of the 20-100+ cfm SSD flow range (although this is by no means assured), and a 50- to 90-watt tubular fan will usually be the appropriate choice.

If no aggregate is present based upon the visual inspection, the fan selection must be based on experience. A 90-watt fan will probably be a reasonable choice in any case. Unless the native soil is highly permeable or air leakage is otherwise expected to be high, a 95- to 140-watt radial blower could also be a reasonable choice, if these prove successful in practice. A high-suction/low-flow blower would *not* be a good choice based solely on visual inspection (without further, sub-slab diagnostics), unless local experience has demonstrated that flows in such cases are consistently very low.

If suction field extension diagnostics have been conducted (Sections 3.3.1 and 3.3.2), and if flows were qualitatively judged or quantitatively measured during these diagnostics, the flow and communication results could help in fan selection. Moderate flows and excellent communication might suggest that a 50- to 70-watt fan would be satisfactory. But in most cases, especially when flows are high or communication is not excellent, a 90-watt fan would be suggested. If flows are moderate and communication is marginal or poor, a 110- to 140-watt in-line radial blower might be suitable. Only if quantitative flow measurements during quantitative suction field testing show flows below 10-20 cfm should a high-suction/low-flow blower be considered.

Where pre-mitigation sub-slab flow measurements are conducted to aid in fan selection, the qualitative flow estimation approach (see Section 3.3.1, *Test procedure)* or the simple quantitative approach (see Section 3.5.1, *Simple sub-slab flow measurement)* will usually be sufficient, if flow results are

US EPA ARCHIVE DOCUMENT

needed at all. These approaches will reveal whether sub-slab flows are generally high, moderate, or low. The more comprehensive, quantitative flow measurement approach discussed in Section 3.5.1 *(More extensive sub-slab flow measurements)* will probably be of value infrequently, if ever, to most mitigators. The performance curve for each of the individual fans on the market covers a fairly broad range; thus, it is doubtful that the more extensive flow testing would often provide information that would aid in any meaningful fine-tuning of fan selection (i.e., enabling the mitigator to pinpoint the preferred brand or model of fan for a specific house), beyond what can be done with the simpler information from the suction field testing.

The one case in which the more extensive pre-mitigation flow measurements might be of value is the case where sub-slab flows are very low, and the mitigator is trying to decide on whether to utilize one of the high-suction/low-flow blowers. The performance curves of these blowers can vary significantly from one another, and from those of the in-line tubular fans and radial blowers. A high-suction/low-flow blower can be overwhelmed if flows are only slightly higher than expected. Thus, when one of these blowers is being considered, it could be well worth the investment to take the time to make a more extensive, quantitative pre-mitigation flow measurement to ensure that such a blower is indeed the best choice. Fortunately, the industrial vacuum cleaners often used to conduct the diagnostics commonly have the performance characteristics needed to simulate the high-suction blowers reasonably well.

Another question that a mitigator might like to address with extensive, quantitative sub-slab flow diagnostics is whether a 50- to 70-watt tubular fan might be sufficient in good-communication cases, avoiding the need for a 90-watt fan. Unfortunately, that question often cannot be effectively answered by this test, if a vacuum cleaner is being used for the pre-mitigation diagnostics. Flows in good-communication houses will often be too high to permit a vacuum cleaner to reproduce SSD flows. To address this question with these diagnostics, the mitigator would have to use portable ASD fan test stands, as discussed in the introductory text in Section 3.3, utilizing 50-, 70-, and/or 90-watt fans to accurately reproduce the flows and suctions that such fans would generate in that particular house.

4.4.1 Centrifugal In-Line Tubular Fans

The 50- to 90-watt centrifugal in-line tubular fans have become the standard fans used in the industry, for a variety of reasons.

- Their performance curve—i.e., the suctions developed at different flows—are in the range needed for SSD applications. In particular, the 90-watt fans provide reasonably high suctions over the full range of SSD flows.

- Their in-line configuration makes them convenient for installation in the system piping.

- Their purchase price is reasonable, ranging from roughly $90 for the 50- to 70-watt fans (with 4- to 5-in. couplings), to roughly $100 for the standard 90-watt fan with 6-in. couplings, to roughly $130-$150 for the larger, 100-watt fans with 6- to 8-in. couplings, based upon 1991 costs (He91b, He91c).

- They are quiet (about 2 to 4 sones), if mounted properly to avoid vibration.

Table 1 lists some of the tubular fans that are being marketed for radon mitigation, from three manufacturers. This list is provided as an illustration of the types of fans available, and is not to be construed as a complete listing of fan manufacturers, or of the models offered by the manufacturers listed. To put the capabilities of these fans into some perspective, the listing is subdivided into six general categories, according to ascending power requirements or fitting diameter.

Of the six categories of fans listed in Table 1, the Category 4 fans (the 90-watt fans having 6-in. fittings) are the ones which appear to be the most universally applicable. They should provide ample suction and flow in essentially all good- and marginal-communication houses. In some cases, they do a credible job even in poor-communication houses.

The performance curve for each fan is summarized by the flow-vs.-suction columns on the right-hand side of Table 1. The 90-watt fans are rated as being able to move 270 cfm at zero static pressure, i.e., the condition that would exist if a free-standing fan with no upstream or downstream couplings or piping were operating at full power in free air, with essentially ambient (0 in. WG) pressure at both the inlet and outlet. When this fan is mounted in a piping network with the resistance of the sub-slab and the suction piping and couplings on the suction side, and with the resistance of any exhaust piping and stack on the pressure side, flows will decrease significantly below 270 cfm, reflecting the extent of the suction at the inlet and of the back-pressure at the outlet. Simply installing a 6-in.-to-4-in. coupling on each side of the 90-watt fan, as would be necessary to install this fan, with its 6-in. fittings, into a network of 4-in. piping, would create enough resistance to reduce the flow to roughly 180 cfm (Br92).

In good- and marginal-communication houses, the 90-watt fans typically draw flows ranging from below 20 to over 100 cfm, depending upon the resistance of the sub-slab and the suction loss in the piping network. In accordance with their performance curve, the fans can maintain a suction of about 1.0 in. WG at the upper end of this flow range; but in fact, the suctions in the SSD system piping near the slab penetration will sometimes be below 0.5 in. WG at 100 cfm due to friction losses in the piping. (See the discussion in Sections 4.3.2 and 4.6.1.) At the lower end of the flow range, the fans can maintain a suction somewhat greater than 1.5 in. WG. (Although Table 1 indicates a suction > 1.0 in. WG at zero flow for the Category 4 fans, based upon manufacturers' literature, these fans have been widely demonstrated to generate something close to 1.7 in. WG at no flow.) At such low flows, friction losses in the piping will be much reduced, and the suction being maintained in the piping will be close to the

US EPA ARCHIVE DOCUMENT

Table 1. Examples of In-Line Tubular Fans Which Have Been Marketed for Radon Mitigation[1,2]

Fan Category	Fan I.D[3]	Max. Watts	Horse-power	Fitting Diameter (in.)	RPM	Flow (cfm) @ 0 in. WG	Flow (cfm) @ 1 in. WG	Max. Suction (in. WG)
1	K4	--	1/40	4	2800	122	--	>0.75
	R100	50	--	4	2900	124	--	>0.75
2	F/FR100	70	--	4	2500	160	60	>1.0
	K4XL	--	1/20	4	2450	179	50	>1.5
3	F125	70	1/30	5	2500	205	--	--
	K5	--	1/40	5	2800	158	--	>0.75
	T1	--	1/40	5	2800	158	--	>0.75
	R125	50	--	5	2900	146	--	>0.75
4	F/FR150	90	1/20	6	2500	270	110	>1.0
	K6	--	1/20	6	2150	270	110	>1.0
	T2	--	1/20	6	2150	270	110	>1.0
	R150	90	--	6	2350	270	102	>1.0
5	F/FR160	100	1/15	6	2150	361	122	>1.0
	K6XL	--	1/15	6	2150	360	122	>1.0
6	F/FR200	100	1/15	8	2150	410	135	>1.0
	K8	--	1/15	8	2150	410	135	>1.0
	T3A	--	1/15	8	2150	410	135	>1.0
	R200	125	--	8	2800	541	324	>2.0

[1] This listing is intended as an example of the types of fans which have been utilized in, or marketed for, radon mitigation systems. This list is not intended to be a comprehensive compilation of fans suitable for this application, nor does inclusion of a fan on this list signify endorsement by EPA.

[2] All fan specifications presented here are taken directly from the manufacturers' literature.

[3] The fan identifiers refer to the following manufacturers: F and FR = Fantech; K = Kanalflakt; R = Rosenberg; T = Kanalflakt.

maximum which can be generated by the fan. In general, the poorer the communication, the lower the flow and hence the greater the suction.

In houses having good communication, the 50- to 70-watt fans (Categories 1, 2, and 3 in the table) can be sufficient to reduce indoor levels below 4 pCi/L, unless flows are very high. Alternatively, the 90-watt fans could be turned down to operate at reduced power; this step would probably prolong fan life, so long as the fan was not turned down so far that the reduced air flow could not adequately cool the motor. However, as discussed in Section 2.3.1, use of a smaller fan, or reducing the fan power, can result in increases in the residual indoor radon level, even if levels remain below 4 pCi/L.

There are several incentives to use a smaller fan. These include reductions in the system installation and operating costs and, on a national scale, reduced consumption of natural resources (coal, oil, gas) and reduced pollution from the generation of electrical power to operate the larger fans. In terms of the installation cost, the savings in the purchase price of the smaller fans, relative to the 90-watt fans is fairly small, about $5 to $10 in 1991 dollars. Use of a 50-watt fan will reduce operating costs (due to fan electricity and the house heating/cooling penalty) by roughly $70 per year relative to the 90-watt fan, or about $5.50 per month, in an "average" climate (Washington, D. C.) (He91b, He91c). The actual operating cost savings can vary significantly, depending on, e.g., the local climate and fuel costs. Each mitigator and homeowner will need to make their own decision regarding the tradeoffs between the increase in health risk due to increased radon exposure likely with the smaller fan, versus the somewhat reduced costs and reduced environmental impact of the smaller fan.

Another potential advantage of using a smaller fan is reduced risk of backdrafting combustion appliances, due to the reduced amount of air drawn out of the house. Backdrafting will be a serious situation if it occurs and should be checked as part of post-mitigation diagnostics (Section 11.5) or perhaps during pre-mitigation diagnostics (Section 3.5.4). However, as discussed elsewhere, backdrafting usually occurs in conjunction with SSD systems only when the house was in a backdraft condition or had only a marginal draft prior to mitigation. This issue will need to be addressed regardless of the SSD fan selection. Thus, it is doubtful that concern about backdrafting will often influence the choice between a 90-watt fan and a 50- to 70-watt fan.

Based upon experience, in very few cases should the 90-watt fans be inadequate to handle the volume of air withdrawn from the sub-slab in residential SSD installations. Flows greater than perhaps 150-180 cfm combined with suctions less than perhaps 0.25-0.35 in. WG in the system piping near the slab penetration (and confirmed by low depressurizations measured beneath the slab) would suggest that the 90-watt fan

US EPA ARCHIVE DOCUMENT

might be inadequate. If flows are so high from a residential installation that the 90-watt fan cannot move enough air to maintain adequate sub-slab depressurizations, the first step would be to look for (and close) major unclosed slab openings which may be permitting large amounts of house air to enter the system. The system piping might also be checked for leaks. If the high flows are found to be due to an unavoidable cause, such as highly permeable native soil, or major slab openings that are not practical to close, such as a perimeter channel drain concealed behind wall finish, then options other than a larger fan might be considered next. These options could include addition of more suction pipes, or conversion of the system to a sub-slab *pressurization* system in the case of highly permeable native soils.

If the decision is made to remain with a SSD system, the 90-watt fan may be replaced with a 100-watt fan. As shown in Table 1, the 100-watt units with 8-in. couplings can move about 410 cfm or more at zero static pressure, compared to 270 cfm for the 90-watt fans, and can develop suctions at zero flow which are at least comparable to those with the 90-watt fans. These fans have a purchase price about $30-$50 more than the 90-watt fans (1991 prices), and will have a somewhat greater operating cost, due to the modest increase in power requirements and to the increased amount of treated air that is likely to be withdrawn from the house. Alternatively, a second 90-watt fan could nominally be mounted *in parallel* with the first, a step which would likely increase flows more than would a switch to a 100-watt fan. Use of a second 90-watt fan would also result in a greater increase in purchase price (a $100 increase rather than a $30-$50 increase), and a greater increase in operating cost due to electricity and heating/cooling penalty.

It is re-emphasized that the 100-watt high-flow fans would be considered only in cases where flows were unusually high. If the problem is that flows are very *low*, as in poor-communication houses, the use of 100-watt fans (in an attempt to better extend the suction field) would not be a suitable response. Rather, in low-flow cases, the appropriate option to consider would be use of higher-suction blowers, as discussed in Sections 4.4.2 and 4.4.3. (Alternatively, two 90-watt fans could be nominally be mounted *in series* to roughly double the suction, although these fans might not be operating at an optimum point on their performance curves.)

In assessing the actual operating costs of SSD systems, it should be noted that the power ratings presented in Table 1 are the maximum power that the fan would draw, if the fan were operating at maximum flow and zero suction. In most cases, the fan will be operating at an intermediate point on its performance curve, and will be drawing less power. For example, in one study where fan power drawn by SSD fans was measured, the 90-watt fans were in fact drawing 60-65 watts (Tu91c); in a second study, they drew 59-72 watts, averaging 68 watts (Bo91).

One other consideration in selecting a fan will be whether the fan is rated for outdoor use. Of the general exhaust configurations discussed in Section 4.6, two have the fan located in an enclosed space: the case where the exhaust stack rises up through the interior of the house, with the fan in the attic; and the case where the piping from a basement SSD system is routed out through the basement band joist into an adjoining slab-on-grade garage, with the fan in the garage. For these configurations, the fan would not have to be rated for outdoor use.

However, two other exhaust configurations envision the fan being outdoors: the case where the piping from a basement system is routed out through the band joist to outdoors, with the fan mounted on the piping outdoors; and the case where the suction pipes penetrate beneath the slab horizontally from outdoors, with the fan necessarily mounted on a riser from the horizontal pipe(s) outdoors. In these cases, if the fan were not rated for outdoor use, it would have to be suitably enclosed. As discussed in Section 4.6, EPA's interim mitigation standards rule against location of the fans within liveable space (such as inside basements) due to concerns about leaks of high-radon exhaust gas from the pressure side of the fan. Thus, when a fan is not rated for outdoor use, locating it inside the basement is not considered an appropriate approach for addressing this issue.

Many of the fans listed in Table 1 are not currently UL listed for outdoor applications, due to concerns about whether the electrical components are adequately weather-proof. Some of these fans have been incorporated in numerous outdoor installations over the years, and have demonstrated reasonable durability during that time period, as discussed in Section 2.3.1. However, occasional failures have been reported in fans not rated for outdoor use due to rainwater entering the electrical box on the side of the fans (Bro92). This has been observed when the coupling is not tight where the wire enters the box; it has also been observed when the electrical switch on the outside of the house is higher than the fan, so that rainwater will run down the wire into the coupling. One possible solution to this problem that has been used in practice is to drill a hole near the base of the fan's electrical box, so that the water will drain out and not flood the box (Bro92). Infrequent cases have also been encountered where the fan's electrical box has flooded by condensate *inside* the piping, when the wiring leading from the box to the fan motor inside the housing has not been adequately sealed where it enters the box from the interior of the fan (Mes92).

At the time of this writing, only one of the fan manufacturers listed in the table is marketing fans UL listed for outdoor mounting; others are currently working on models that will be rated for outdoor use.

One other consideration in selecting a fan is that the fan housing should preferably be integral, and otherwise designed to reduce leakage of high-radon exhaust gas on the pressure side. Even though fans in attics, crawl spaces, and garages are outside the living area, it is generally desirable to eliminate leakage of exhaust gases in those areas. In general, fans having integral plastic bodies minimize leakage; this includes all of the fans in Table 1 except for the Kanalflakt K series fans. Where there are leakage points around the fan housing, these should generally be caulked before installation.

US EPA ARCHIVE DOCUMENT

US EPA ARCHIVE DOCUMENT

4.4.2 In-Line Radial Blowers

In-line radial blowers designed specifically for radon mitigation applications have recently been introduced onto the market. From the manufacturer's performance data, these blowers should be able to produce suctions comparable to those of the 90-watt tubular fans at flows toward the upper end of the typical SSD flow range (i.e., about 1 in. WG at 100 cfm). Thus, the radial blowers should perform as well as the standard tubular fans at relatively high-flow conditions.

But these radial blowers offer the advantage of much higher suctions (over 2 to 4 in. WG) at the low flows, compared to just over 1.5 in. WG with the 90-watt fans. Thus, these new blowers would be expected to provide higher suctions over much of the SSD flow range. This feature could help extend the suction field in marginal- and poor-communication houses using fewer suction points than would be needed with a standard fan; it could also accommodate the piping friction loss where small-diameter piping must be used.

While these in-line radial blowers provide lower suctions than do the high-suction/low-flow blowers discussed in Section 4.4.3 at low flows (e.g., 10-20 cfm), they offer a potentially significant advantage in that they can handle much higher flows (over 100 cfm). Flows this high would overwhelm the high-suction/low-flow units, reducing their suctions to low levels. Thus, the in-line radial blowers could be considered in marginal-communication cases where flows would be too high for the high-suction units, and will be better able to handle increases in system flows over time in poor-communication houses if, e.g., new air leaks appear in the slab after installation.

The performance characteristics of three in-line radial blowers are summarized in Table 2. This list is intended for illustration of the types of units available; it is not intended as a comprehensive compilation of blowers having these characteristics, nor does inclusion of a blower on this list signify endorsement by EPA. The particular blowers included on the list are being marketed specifically for radon mitigation. All of the data in the table were provided by the manufacturer (Ra92, Zu92).

Because these blowers are relatively new on the market, they have been less widely demonstrated in the field than have the tubular fans. Thus, at this time, it is not possible to rigorously compare the actual radon reductions achieved in the field compared to reductions with the 90-watt fans, or to rigorously compare the noise levels associated with the blowers vs. the fans. Nor can anything be said regarding the durability of the radial blowers. However, the manufacturer claims that a large number of the radial blowers have been successfully installed to date, and that they are about as quiet as the tubular fans (Zu92).

The GP201 has a capital cost (according to 1993 prices) about the same as do the 90-watt tubular fans in Section 4.4.1 (generally a little below $100). The GP201 also draws about the same amount of power (95 watts maximum, compared to 90 watts maximum for the tubular fan), so that it should have a similar cost for electricity. The other two blowers in Table 2 have a somewhat higher capital cost (about $110 to $160) than do the tubular fans; they also draw more power (110 to 140 watts maximum), thus suggesting a somewhat higher cost for electricity. The radial blowers might be considered when any increase in installation and operating costs would be offset by cost savings resulting from reductions in the number of suction points that would otherwise be needed with the 90-watt tubular fans.

Because these blowers are designed for in-line mounting, they can be mounted on the piping in the same manner as the in-line tubular fans discussed in Section 4.4.1. The blower couplings are 3 in. diameter; they would thus be mounted in 3 in. piping, or, if 4-in. piping is used, would require a 4- to 3-in. adapter coupling.

4.4.3 High-Suction/Low-Flow Blowers

The 90-watt centrifugal in-line tubular fans have sometimes given fair radon reductions in houses having poor sub-slab communication and low flow (10-20 cfm or less) when there have been sufficient SSD suction points, although the fans were operating at the low-flow end of their performance curve. Better reduction performance (or comparable reductions with fewer suction points) might be achieved by using the in-line radial blowers, if these prove successful in practice. The in-line radial blowers will provide higher suctions, but, like the tubular fans, are designed to operate routinely at flows higher than those seen in true poor-communication houses.

Where flows are in fact as low as 10 to 20 cfm and less, better performance (with fewer suction points) and longer fan life

Table 2. Performance Characteristics of Some In-Line Radial Blowers Being Marketed for Radon Reduction Systems

Brand Name	Fan I.D	Max. Watts	Fitting Diameter (in.)	RPM	Flow (cfm) @ 0 in. WG	Flow (cfm) @ 1 in. WG	Max. Suction (in. WG)
DynaVac	GP201	95	3	3000	~130	77	2.0
	GP301	110	3	3000	~140	92	2.6
	GP501	140	3	3000	~140	95	>4.0

might be achieved by using high-suction/low-flow blowers, designed to operate routinely at these very low flows. The very high suctions in these high-suction/low-flow units (18 to 50 in. WG maximum) might extend more effectively beneath the slab with a reduced number of suction points, compared to the 1.5+ in. WG maximum achievable with the 90-watt tubular fans and the 2.5-4 in. WG maximum with the in-line radial blowers.

The performance characteristics of two brands of high-suction/low-flow blowers are summarized in Table 3, based upon manufacturer literature (Pe90, Ra92). This list is intended for illustration of the types of fans available; it is not intended as a comprehensive compilation of blowers suitable for this application, nor does inclusion of a fan on this list signify endorsement by EPA. The particular blowers included on the list are being marketed specifically for radon mitigation, and have reportedly been soundproofed for acceptably quiet operation.

The Pelican S-3 blower is a centrifugal regenerative blower, specifically configured and soundproofed for residential radon mitigation use. Although it is being used for mitigation installations being made by its manufacturer, it is not currently being marketed for use by other mitigators. The DynaVac units are high-speed centrifugal blowers.

The radon reduction performance of these blowers has not been extensively compared against that of a 90-watt tubular fan (or a 110- to 140-watt in-line radial blower) in a given house. Some mitigators working in poor-communication houses report that the use of one of these high-suction blowers has reduced the required number of suction points by one or more, compared to use of a standard fan (Bro92, Kl92). However, it is not possible at this time to provide specific guidance regarding the benefits of using one of these blowers rather than one of the other units under specific conditions.

It is re-emphasized that these high-suction/low-flow units generally cannot handle flows above the low end of the SSD flow range. As shown in Table 3, all but one of the units falls to zero suction once the flow increases to about 25-50 cfm. As a result, if one of these blowers is installed in a system initially having a very low flow, and if the flow subsequently increases after installation, for example, due to new openings created in the slab or due to a drying and increased permeability in the underlying soil, these low-flow units could be overwhelmed, and the radon reduction performance could be seriously degraded.

The manufacturers claim that these high-suction/low-flow blowers are acceptably quiet if mounted properly to avoid vibration, although exact figures are not available to compare against the 2-4 sones for the tubular fans. The units are enclosed within a soundproofed casing. In practice, some mitigators report that with one or two of the blowers in Table 3, exhaust mufflers and careful siting of the fan can be required to reduce the blower noise to levels that homeowners do not find objectionable.

None of these units can be supported by the PVC piping; both must be mounted on (or suspended from) rafters, joists, the side of the house, or other members. They are thus somewhat less convenient than the in-line tubular fans and in-line radial blowers, but the piping can be readily designed to account for the configuration of these units.

A main disadvantage of the high-suction/low-flow blowers is that they are significantly more expensive than the tubular fans. An individual Pelican unit retailed for $695 in 1991 (Pe90), compared to about $100 for the 90-watt tubular fan; individual DynaVac blowers retail for $630-$660 in 1992 (Ra92). At near-zero flow, these blowers would draw a maximum of 200-300 watts, although, at higher flows, the power consumption would be well below that. This maximum consumption is roughly 100-200 watts more than the maximum consumption of the 90-watt tubular fan, which would increase the annual cost of electricity to run the fan by $70-$140, if electricity costs $0.08 per kWh. These blowers would most often be considered in cases where these increased installation and operating costs are offset by savings resulting from reductions in the number of suction points required.

Because there has been less experience with these high-suction fans, there is less information on their durability.

In addition to the two brands of high-suction fans listed above, there are a variety of industrial blowers on the market that can operate at low flows and generate high suctions. But these other blowers have not been designed with residential radon mitigation applications in mind. Of particular concern, many are too noisy for residential applications. In addition, their fittings may not be configured for easy connection to PVC piping, and the fan casing itself may not be configured for

Table 3. Performance Characteristics of Some High-Suction/Low-Flow Blowers Suitable for Radon Reduction Systems

Fan Manufacturer	Fan I. D.	Max. Watts	Flow (cfm) @ 0 in. WG	Flow (cfm) @ 10 in. WG	Max. Suction @ 0 cfm (in. WG)
Pelican Environmental Corp	S-3	210	27	22	26
DynaVac	HS2000	270	110	72	18
	HS3000	195	44	37	34
	HS5000	320	53	47	50

US EPA ARCHIVE DOCUMENT

convenient mounting in a house. The housings around some of these blowers may not be leak-tight, so that caulking of the housing leaks would be required. Like the fans listed above, these other blowers have a higher purchase price and a higher power requirement (150-250 watts) than do the tubular fans.

4.5 Installation of Suction Pipes Beneath the Slab

4.5.1 Vertical Pipe Installed Down Through Drilled Hole Indoors

Probably the most common method of installing SSD suction pipes is to drill a 4.5- to 6-in. diameter hole through the basement slab or the slab on grade inside the house, and to mount the pipe vertically through that hole. This method is illustrated generically in Figure 1, although there are a variety of acceptable methods for actually installing the pipe in the hole, as discussed later.

Selecting the specific hole location. The general location of each suction hole will have been selected during system design based upon a number of criteria, described in Section 4.2. During the actual installation, described here, a more specific identification will be required of exactly where the hole is to be drilled.

Several factors will contribute to this selection. For one thing, the hole will have to be far enough from the foundation wall and any other obstructions (at least 6 in.) to avoid the footing (which commonly extends out 4 in.) and to provide the workers with sufficient clearance to operate the drilling equipment. In addition, sometimes a SSD suction pipe in a basement is to be connected by a horizontal run to another suction pipe, or is to be routed to a remote point where it will exit from the basement. In these cases, if the basement ceiling is unfinished, it will often be optimal to locate the suction pipe directly beneath the space between two joists supporting the floor above, so that the pipe can easily be connected to the horizontal run between the joists. Or, if there is a suspended ceiling, the mitigator may wish to locate the pipe centrally under a ceiling panel for easy penetration of the ceiling. If the pipe will extend straight up through the ceiling as part of an interior stack, the mitigator may wish to line up the slab hole with the hole in the ceiling above; finish on the floor above, or obstructions in the attic, might influence the precise location of the ceiling hole.

Since the slab hole is often an inch or two larger in diameter than is the pipe, there will be some flexibility for shifting the pipe an inch or so one way or another, in order to get the pipe straight and precisely lined up with any overhead connections.

In selecting the specific hole location, the installers should also consider some of the criteria that should have been used to select the general location during system design. In particular, the installers should be alert to the possible location of sub-slab (on in-slab) utility lines, and to the availability of a convenient route for connecting the suction pipe to other suction pipes and to the exhaust point.

Drilling the hole through the slab. The hole that is made through the slab will usually be between 4.5 and 6 in. in diameter when the 4-in. piping (which is 4.5 in. outside diameter) is being used. The desired diameter of the slab hole for 4-in. piping will depend upon how the suction pipe is to be mounted in the slab, as discussed later. When smaller-diameter piping is to be used, the slab hole could nominally be smaller, although it will still have to be large enough to accommodate a worker's hand or an auger if a pit is to be excavated beneath the slab, as discussed later.

To make the hole through the slab, many mitigators use a rotary hammer drill, an electric power drill which includes a hammering motion. The rotary hammer drill is used to drill holes, typically 1/2 in. diameter, through the slab around the circumference of the desired suction hole. A chisel bit is then used to break out the concrete in the center.

Another option for drilling the slab holes is a coring drill with a 4.5- to 6-in. bit. A coring drill uses a hollow bit the size of the desired hole to remove a plug of concrete of that diameter, leaving a slab hole having a smooth perimeter. Coring drills can be operated dry using a carbide bit or wet using a diamond bit. With wet drills, where water is used to cool the bit during drilling, a dike must be used to capture the water during drilling. Dikes have been fabricated out of sand (Sc88), tempered masonite (Ba92), and 1/8-in. thick flexible plastic sheeting (Ba92). Also, a wet vacuum cleaner or some other approach must be used to remove the resulting slurry. Although wet coring drills are quieter than dry drills, the mess associated with wet drills can preclude their use in heavily finished areas.

Compared to the coring drill approach, the rotary hammer approach takes longer and leaves a hole having a more ragged perimeter. However, coring drills are much larger and more expensive than rotary hammers; two operators may be required; and, with the wet coring drills, care must be taken to capture and dispose of the slurry. Accordingly, many mitigators commonly use rotary hammers for residential applications, and rent a coring drill for those cases where many holes will be required (e.g., in the large slabs often encountered in schools and large buildings). Mitigators installing large numbers of systems may find it cost-effective to purchase a coring drill directly.

It is recommended that the installers attempt to control the drill so that it penetrates no deeper than the bottom of the slab, insofar as possible. The concern is to avoid damage to utility lines that may unexpectedly be beneath the slab despite the efforts that were made to locate the hole where no lines would be present. (Stopping the drill at the bottom of the slab would not avoid damage to utilities embedded *in* the slab.) If a rotary hammer drill is being used, the mitigator may wish to probe carefully beneath the slab with the drill bit after making the first holes around the core circumference, pushing the bit somewhat deeper, to try to identify the presence and nature of any sub-slab obstructions (such as a utility line or a footing) before drilling further holes. After the concrete core is removed, the fill should be inspected. If this inspection shows that no lines are present and if the sub-slab material is

US EPA ARCHIVE DOCUMENT

hard-packed, the drill might then be used to penetrate deeper into the hard sub-slab material, to aid in excavation of a pit.

Another option to avoid damage to sub-slab or in-slab utility lines is a safety cut-off switch that has been developed by one mitigator (Bro92). This switch would open, and shut off power to the drill, if the drill bit touches anything metal in or beneath the slab, such as metal water lines, gas lines, and electrical conduits. The circuit for such a safety switch could be assembled in a box; the power cord from the drill would plug into the box, and a cord from the box would plug into an electrical outlet in the house. Two leads would extend from this box; one would be clipped to the drill, and the other would be clipped to a water pipe or other metal pipe extending through the slab, creating a low-voltage circuit. Since all metal utilities effectively interconnect, connecting the one clip to any accessible metal line entering the sub-slab will effectively include all metal utilities in this circuit. If the drill bit touches any metal line in or under the slab, the low-voltage circuit will be closed, activating a relay which will open a switch in the wiring providing power to the drill, thus shutting off the drill.

It is recommended that a visual indicator (such as a light bulb) also be included in the low-voltage circuit, so that the light comes on when the drill bit touches metal (Bro92). This light may flash before the relay switch is activated, alerting the workers that a problem exists before damage is done to the utility line.

Mitigators would have to construct this cut-off switch themselves. A circuit diagram for this switch is included in Reference EPA89c. This safety cut-off switch would not work if the sub-slab utilities were water or sewer lines made of plastic.

Some mitigators also use a ground fault interrupter (GFI) in the power cord to the drill, to protect the workers. The GFI would shut off power to the drill if there were a short-circuit in the drill. Thus, a GFI could be helpful when working under wet conditions, when short-circuits might be created by the presence of water. The GFI would also shut off the drill if the drill cut into a sub-slab electrical conduit, creating an electrical surge in the drill; in this case, the GFI might reduce damage to the conduit, but would not prevent damage altogether, and would not necessarily prevent electrical shock to the worker. For this application, GFIs are mounted on a short length of cord which is plugged in between the electrical outlet and the drill.

Except with the wet coring drill, some dust is generated during the drilling process. Continuous operation of a vacuum cleaner immediately beside the drill bit is generally helpful in reducing the amount of dust in the air around the installers, and the amount deposited in the house. The vacuum cleaner should exhaust outdoors; vacuums depending upon bags to capture the dust should be located outdoors. If a dry coring drill is being used in a finished area, temporary dust curtains have been suggested to isolate the drilling area from the finished part of the house, although many mitigators find this unnecessary. In cases where the drilling process generates significant amounts of dust and noise, the workers should be provided with respiratory and ear protection. The work area should be ventilated, to reduce the concentration of dust and radon.

Excavating a pit beneath the slab. As discussed in Section 2.3.1, excavation of a pit directly under the slab hole will often aid in the distribution of the suction field beneath the slab. The pit will reduce the suction loss encountered as sub-slab gases remote from the pipe (initially moving at only a few feet per minute or less) accelerate to pipe velocity (perhaps 100 to 1000 ft/min). The loss is much less if this acceleration occurs in the free space of a pit rather than in the pore space within soil or gravel.

Stated in another way, the pit significantly increases the surface area of the exposed soil face through which the soil gas flows. Increasing this surface area reduces the maximum velocity of the soil gas through the soil pores, and hence the suction loss. To illustrate this point, with a pit of sufficient size, the gas beneath the slab will never be moving at a velocity as high as it will be after it enters the suction pipe. But if the pipe were resting directly on the soil, so that the exposed soil face were equal to the cross-sectional area of the pipe, the gas under the slab near the pipe entrance would necessarily have to be moving at a greater velocity than that in the pipe, since the void space in the soil is much less than the open area in the pipe.

Another benefit of excavating a pit is that the pit will potentially intersect fissures or permeable strata at some distance from the suction hole, or at some depth beneath the slab. In addition, the pit will help prevent sub-slab water from blocking the suction pipe.

From a practical standpoint, such pits are probably not really necessary when there is an aggregate layer under the slab. Because of the good communication in such houses, the system could still perform well despite sustaining the increased suction loss resulting from the lack of a pit. In addition, the suction loss *might* be less in the relatively large pores between pieces of aggregate (compared to the loss that would take place in the tiny pores between hard-packed soil particles). However, pits are usually relatively easy to dig when aggregate is present, to the extent that some mitigators are not able to separate out the labor hours/costs required to dig the pit from the total labor/costs required to drill the hole (He91b, He91c).

Thus, *it is recommended that a pit always be excavated beneath the cored hole.* Where there is good aggregate, this is done because it is easy to do, it might help, and there is no reason not to do it. When there is good aggregate, a relatively small pit will probably be sufficient. Where there is not good aggregate, the pit is excavated because it can be important in improving the performance of the system; in this case, a larger pit may be warranted. In general, the more packed the soil (and the harder it is to excavate the pit), the more important the pit probably is.

The pit is often excavated largely by hand, by reaching through the 4.5- to 6-in. hole in the slab. If it is clear that there are no utility lines buried in the soil under the hole, the rotary hammer drill or coring drill that was used to make the hole

US EPA ARCHIVE DOCUMENT

US EPA ARCHIVE DOCUMENT

through the slab might be used to help break up hard-packed soil immediately under the slab, to simplify the excavation. A variety of power and hand tools can also be used to loosen the hard-packed soil. Some mitigators insert an auger or some similar tool through the slab hole to break up the soil. These augers can be driven by a power drill, possibly fitted to drill at a right angle. The shaft on the auger can be about 2 ft long. Many mitigators find it convenient to use the industrial vacuum cleaner to remove the loosened soil through the slab opening, rather than digging it out with a trowel.

A hole roughly 1 to 3 ft in diameter and 4 to 18 in. deep can be reasonably excavated in this manner. Thus, a pit as large as about 10-14 ft^3 (about 75-100 gal) could nominally be dug. This is much larger than is necessary based on fluid flow considerations (Br92), and pits are significantly smaller in most cases (commonly 1-3 ft^3, or roughly 5-25 gal). While the appropriate size and shape of the pit will depend upon the particular house and geological conditions, some mitigators report often finding it preferable to increase pit diameter rather than to increase depth (Bro92).

Usually, this pit is left as an empty void. In some cases where there is no aggregate under the slab, some mitigators suggest placing some gravel in the bottom of the pit to help prevent the sides from caving in as a result of sub-slab moisture (Ba92).

Because of the high radon concentrations that can exist under the slab, the worker digging through the open slab hole may sometimes need to wear a respirator, depending upon sub-slab levels and the time it takes to excavate the pit. Radon measurements at the slab by one mitigator in a region having only moderate sub-slab radon concentrations and good aggregate (so that excavating a sub-slab pit took only 10 minutes), suggested that no significant additional radon exposure occurred during pit excavation (Mes92). If the vacuum cleaner is used to remove dirt, it should be exhausted outdoors.

Mounting suction pipes through slab. A variety of acceptable methods exist for mounting the suction pipe in the slab. Figure 14 illustrates several methods for the case where the weight of the pipe is not being supported at the slab; in these cases, the piping will have to be supported overhead in some manner, as discussed below. Figure 15 shows several methods for mounting the suction pipe in cases where the pipe weight *is* being supported at its slab penetration.

In essentially all cases, the bottom of the pipe ends somewhat above the underside of the slab, or roughly even with the underside. This is to prevent the pipe opening becoming plugged with soil over time if the pit caves in, or blocked by water if the pit floods during wet periods. The pipe must not rest on the bottom of the pit; this would restrict air flow into the pipe, and could result in the pipe becoming blocked by cave-ins and water. In the one example shown where the pipe is supported by the bottom of the pit (Figure 15E), notches which extend up to the underside of the slab have been cut in the pipe to avoid these problems (An92).

Another common feature in all of these options is that the gap between the outer circumference of the pipe and the concrete

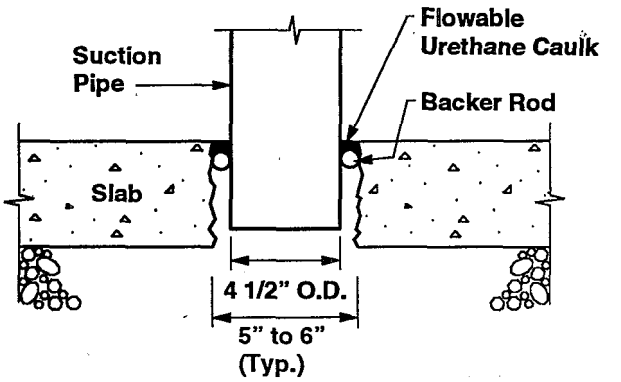

A) Use of backer rod and flowable caulk.

Note: When using expanding foam, care must be taken that the pipe opening does not become blocked

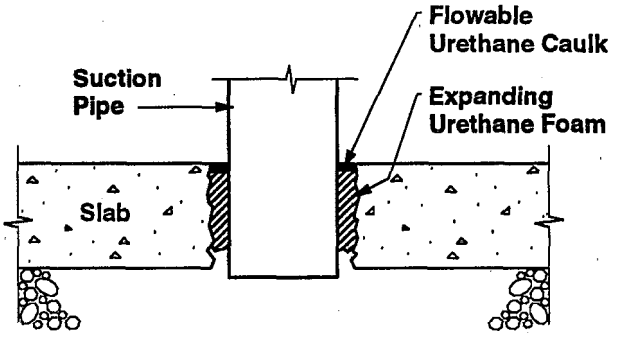

B) Use of expanding foam and flowable caulk.

Note: Mortar provides additional support against lateral movement of the pipe.

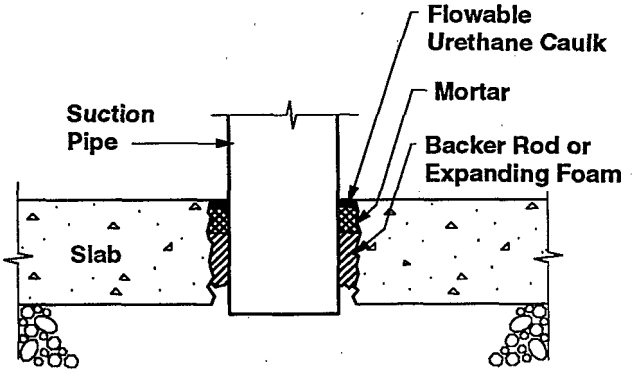

C) Use of mortar and flowable caulk.

Figure 14. Alternative approaches for installing the SSD suction pipe in the slab, in cases where the weight of the suction pipe is not supported at the slab penetration.

US EPA ARCHIVE DOCUMENT

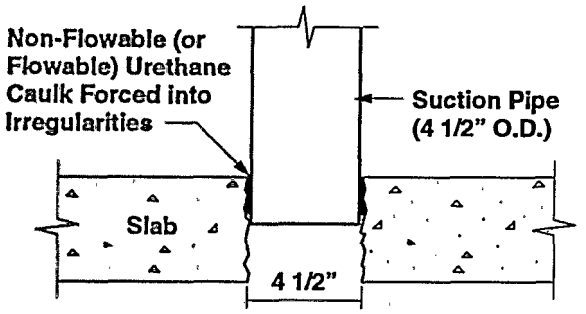

A) Drill slab hole exactly 4 1/2" dia., so that outer diameter of pipe lodges tightly against irregular sides of hole.

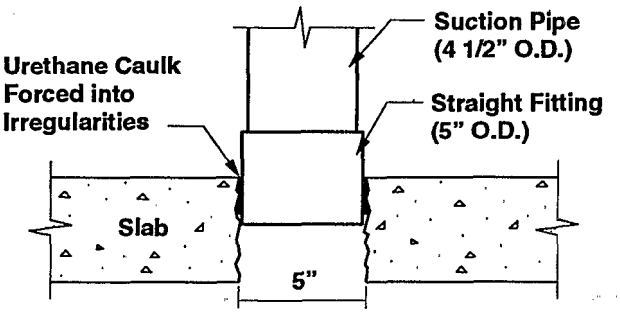

B) Drill slab hole exactly 5" dia., so that outer diameter of straight fitting lodges tightly against irregular sides of hole.

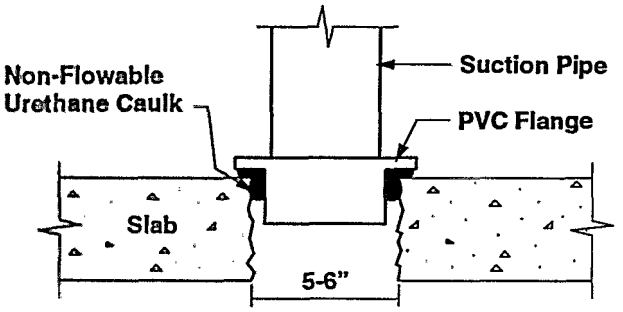

C) Drill slab hole 5-6" dia., mount suction pipe in PVC flange, so that lip of flange rests on top of slab.

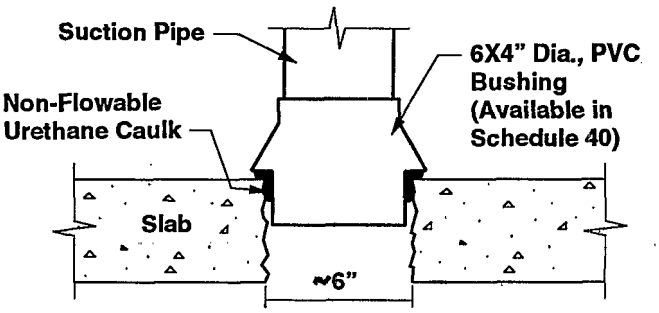

D) Drill slab hole about 6" dia., mount suction pipe in 6"X4" PVC bushing, so that lip on 6" end of bushing rests on top of slab.

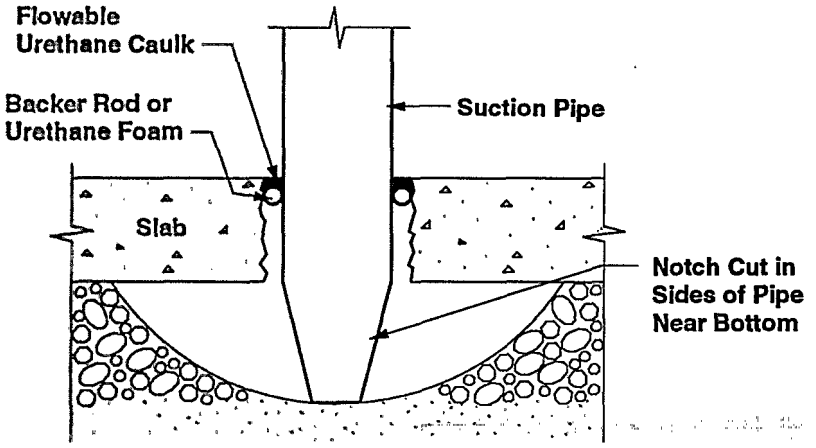

E) Suction pipe allowed to rest on bottom of pit.

Figure 15. Alternative approaches for installing the SSD suction pipe in the slab, in cases where the weight of the suction pipe is supported at the slab penetration.

must be effectively caulked closed. Since this slab opening is right at the point where suction is being drawn, this opening would have a particularly detrimental effect on suction field distribution if left unsealed. Urethane caulks are recommended for this application, because they bond better to the concrete than silicone caulks. If the gap around the perimeter is fairly narrow (e.g., less than about 1/4 in. wide), a gun-grade (non-flowable) polyurethane caulk is probably the best choice; this caulk should be forced down into the gap, in order to maximize the pipe and concrete surface area that it contacts, to improve bonding. If the gap is wider than 1/4 in., it will likely be necessary to force some appropriate material (such as backer rod) down into the gap (see Section 4.7) to provide support for the caulk. In this case, a flowable urethane caulk can be used; the flowable caulks work their way into irregularities in the surfaces, providing a better seal.

In the details in Figure 14, the caulk, foam, or mortar must be applied after the entire piping network is in place. Otherwise, the vertical pipe may shift somewhat during the remainder of the installation process, causing the seal to be broken at the slab.

Figure 14A shows one common approach when the piping is not supported at the slab (Bro92). This is the specific method illustrated in Figure 1. The 4.5-in. O.D. suction pipe is inserted into a 5- to 6-in. diameter slab hole. Backer rod (a closed-cell foam which is sold in rope form) is stuffed down into the gap between the pipe and the slab, and the channel above the backer rod is flooded with flowable urethane to a depth of less than 1 in. (consistent with the instructions provided by the caulk manufacturers). One possible disadvantage of this approach is that the caulk and backer rod do not provide much support against lateral movement of the pipe.

Figure 14B is similar to 14A, except that the support for the flowable caulk is now provided by expandable foam rather than backer rod (An92). The foam may provide some additional support against lateral movement. In this case, the bottom of the pipe is shown slightly below the underside of the slab, in an effort to avoid plugging of the pipe by the expanding foam.

Figure 14C shows a method for providing further support against lateral movement (An92). In this case, a layer of mortar is placed between the foam and the caulk. Mitigators using this technique report that the flowable caulk can be applied directly on top of the wet mortar, without waiting for the mortar to set (An92). Applying the caulk while the mortar is still wet prevents the caulk from adhering to the mortar, but apparently does not prevent adequate bonding to the side of the pipe and to the concrete slab.

A variety of approaches can be used to support the piping weight at the slab penetration, some of which are shown in Figure 15. One method is to drill the slab hole to be just about equal to the 4.5-in. O.D. of the suction pipe, as shown in Figure 15A (Mes92); the pipe is forced down into the hole until it lodges tightly against the sides of the hole. This is possible in part because the face of the concrete inside the hole is irregular, if the hole was prepared using a rotary hammer drill. A similar approach is shown in Figure 15B (Mes92); however, in this case, a straight fitting is cemented onto the end of the pipe, so that the hole diameter can now be 5 in. instead of 4.5 in. (somewhat facilitating the excavation of a sub-slab pit). In both of these cases, the residual gap between the pipe and the slab will probably have to be caulked with non-flowable urethane caulk, unless the fit is indeed tight enough that flowable caulk can be used.

Another method for supporting the suction pipe is illustrated in Figure 15C (Fo90). In this case, the end of the suction pipe is cemented into a PVC flange having an inside diameter of 4 in. The outer diameter of the flange, about 5 in., is slightly smaller than the slab hole. The lip of the flange, about 6 in. in diameter, rests on the top of the slab as shown in the figure, supporting the pipe. A non-flowable caulk must be forced into the gap between the outer circumference of the flange and the concrete, and a good bead of the caulk should be placed between the lip of the flange and the top of the slab, before the flange is pressed down into the hole. The suction pipe should be effectively cemented to the interior of the flange, to prevent leaks at the seam between the pipe and the flange.

Another effective approach is to use a 6- by 4-in. bushing, as shown in Figure 15D (Kl92), a fitting which is available in Schedule 40. At one end, this bushing is designed to fit around the 4.5-in. O.D. of a 4-in. suction pipe; at this end, the bushing itself has an O.D. of about 5 in. At the other end, the bushing is designed to fit inside a 6-in. pipe; the main extension of the bushing will thus be about 6 in. O.D. at this end, but it has a lip which is about 6.5 in. diameter, equivalent to the O.D. of 6-in. pipe. The 4-in. suction pipe is cemented into the smaller end of the bushing; the 6-in. end of the bushing is placed down into the slab hole, which should be about 6 in. diameter; and the 6.5-in. wide lip rests on the top of the slab, supporting the piping. Non-flowable urethane caulk is forced between the sides of the bushing and the hole, and between the underside of the lip and the top of the slab.

In Figure 15E, the weight of the pipe is supported by allowing the pipe to rest against the bottom of the pit (An92). To avoid flow restriction and to avoid pluggage of the pipe with soil or water, notches are cut in the side of the pipe, extending at least as high as the underside of the slab. In the figure, the gap between the pipe and the slab is sealed with backer rod and flowable urethane caulk.

Another option that has been used (Mes92) is to partially embed one or more large masonry nails (spikes) laterally into the side-wall of the slab hole, at a depth perhaps halfway between the top and underside of the slab. A portion of each spike extends into the hole opening. The pipe then rests on the exposed portions of the spikes.

In the cases shown in Figure 14, where the weight of the piping is not supported at the slab, some means for supporting the pipe will be required to prevent it from dropping all the way down to the bottom of the hole. This will be done using hangers and/or strapping, or perhaps pipe clamps. The exact manner in which hangers, strapping, and/or clamps will be used to support the suction pipe will depend upon the configuration of the remainder of the piping network.

US EPA ARCHIVE DOCUMENT

Discussion of the configuration and support of the overall piping network is presented in Section 4.6.3. The discussion here addresses only the immediate support of the individual vertical suction pipe, in cases where it is not supported at the slab penetration.

Figure 16 illustrates some alternative methods for supporting the suction pipe in the case where the vertical suction pipe connects to a horizontal piping run. There are two categories considered for this case: a) the horizontal run is perpendicular to the overhead floor joists, below the joists; and b) the run is parallel to the joists, up between the joists.

Figure 17 shows some alternative methods for supporting the suction pipe in the case where the pipe extends straight upward through the overhead flooring.

In all cases, the support is provided in a manner that attempts to reduce or avoid the transmission of vibration noise from the pipe to the joists or flooring. In cases where there is a horizontal run of piping, supports should be provided every 4 to 10 ft along the run; one of these supports should be near the vertical pipe.

One common support material is plastic strapping, perhaps 1 in. width. Figure 16A shows two possible methods for using strapping to support a horizontal pipe running below the joist. The ends of the strap are nailed into the joist. It is important that the pipe be suspended a short distance below the joist, as shown, rather than being held against the joist, to avoid transmission of vibration. Vibration is not transmitted well through the strapping itself. Where the pipe is parallel to and up between the joists, the upper inset in Figure 16B shows a common way to suspend the piping between the joists. The rectangle labelled "Strapping loop" in the lower diagram of Figure 16B is attempting to depict such strapping suspending the pipe between the joists. (Such a suspending strapping loop is also what is being depicted by the rectangle labelled "Strapping" in Figure 1 and subsequent figures.)

As shown in Figure 17A, strapping can also be used to support vertical pipes. However, in this case, the strapping must be attached to the pipe by screws in order to prevent the pipe from slipping down through the strapping. (When screws must be inserted into pipes, it may be advisable to use Schedule 40 piping, since the thin-walled pipe may be prone to crack.)

For horizontal runs, hangers can also be used to support the pipe, as illustrated in Figures 16A and 16B. One common type of hanger is a plastic J-hook, shown in two of the insets. The method of using the hook will depend upon whether the pipe is parallel or perpendicular to the joists.

Where the pipe extends straight up through the overhead flooring, the weight of the piping can also be supported against the flooring. As shown in Figure 17B, some mitigators cement a straight fitting, or pipe coupling, into the pipe at just the right position; the lip of the fitting rests on top of the overhead floor, providing the support. Alternatively, as shown in Figure 17C, a two-piece pipe clamp can be clamped tightly around the pipe at that location, resting on the flooring. In this case, it may be desirable to place some type of cushion (such as closed-cell insulation) between the clamp and the floor to reduce the transmission of vibration noise to the flooring.

Figures 16 and 17 show the suction pipe extending straight upward from the slab. Where the suction pipe is installed near a perimeter wall, another option used by some mitigators for supporting the pipe involves offsetting the pipe so that the riser is flush against the wall (Bro92, Kl92). To accomplish this, a vertical pipe stub about a foot long would be installed in the slab, and two 45° bends would be attached to this stub to provide the desired offset. In this case, the pipe would be supported by attachment against the wall, using one of the approaches described in Section 4.6.5 for attaching an exterior stack against the side of a house (see *Exhaust piping from exterior fans - support of stack against house).*

4.5.2 Vertical Pipe Installed Down Through Large Hole Indoors (Large Sub-Slab Pit)

When a 4.5- to 6-in. diameter hole is cored through the slab, as described in Section 4.5.1, the size of the sub-slab pit that can be excavated is determined by the length of an arm, or the length of an auger that can be inserted through the hole. The largest feasible pit excavated through a slab hole would thus be roughly 18 in. radius and 18 in. deep, or about 10-14 ft^3 maximum (about 75-100 gal). Many pits are probably much smaller than this, due to the practical difficulties in carrying out the excavation.

In terms of reducing suction loss due to acceleration of soil gas up to pipe velocity, a 10- to 15-gal pit is probably larger than is necessary, even for the highest pipe velocities, based on fluid flow calculations (Br92). Thus, from this standpoint, there is no incentive to make the pit any larger. However, a larger pit would potentially help intersect fissures or permeable strata more remote from the suction hole. On this basis, some investigators have postulated that a larger pit might be useful to help extend the suction field in very poor-communication houses.

Excavation of a larger pit would require that a larger hole be made through the slab, using a jackhammer or some other means. From a practical and structural standpoint, the largest such slab hole that might be considered would be about 3 ft by 3 ft. This hole size would permit the excavation to extend to a greater radius than 18 in. and a greater depth. Such a large hole would increase the cost of the installation, by about $200 per hole (He91b, He91c). With slabs that are tiled or otherwise finished, it would increase the aesthetic impact as well.

The data presented in Section 2.3.1 show that increases in pit size can sometimes, although not always, improve the measured suction field extension in houses having poor sub-slab communication. Most of the pits studied were smaller than those that would be achieved by creating a 3 x 3-ft hole in the slab, preventing a rigorous assessment of the practical benefits of making a pit that large. The largest pit studied in Reference Py90 (24 in. square and 18 in. deep) did not significantly increase suction field extension relative to smaller

US EPA ARCHIVE DOCUMENT

US EPA ARCHIVE DOCUMENT

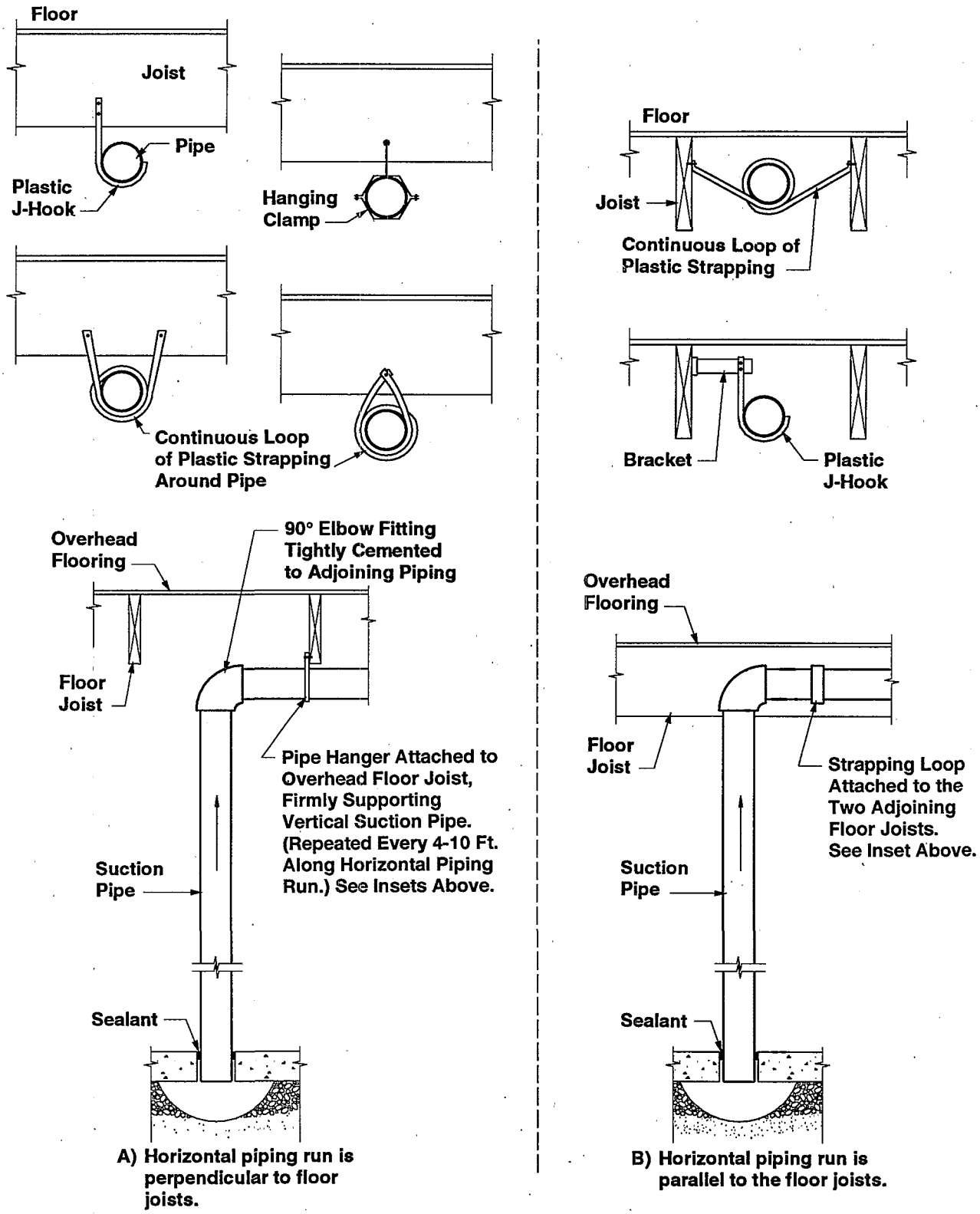

Figure 16. Some alternative approaches for supporting the weight of a suction pipe when there is a horizontal piping run, in cases where the pipe is not supported at the slab penetration.

US EPA ARCHIVE DOCUMENT

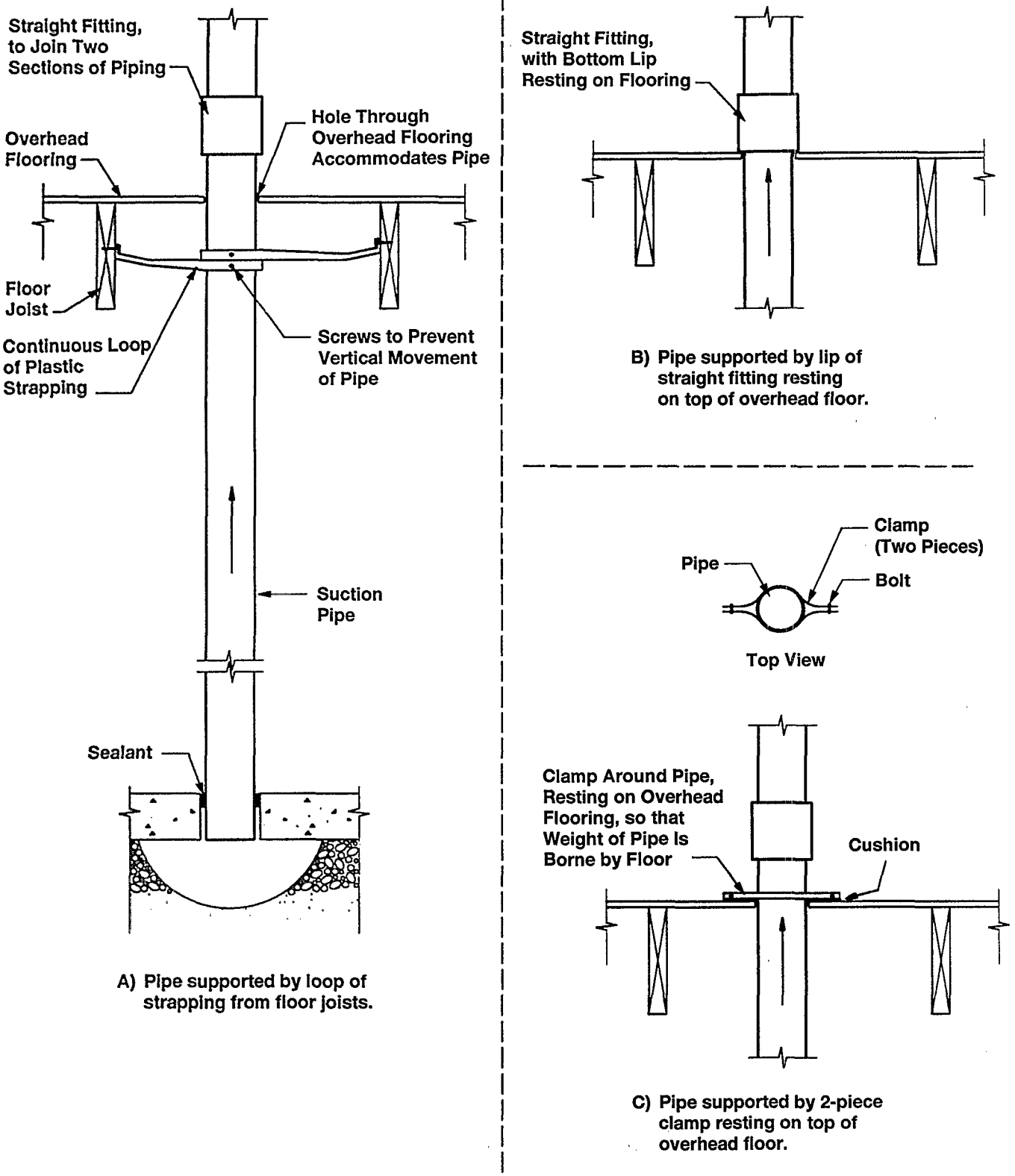

Figure 17. Some alternative approaches for supporting the weight of a suction pipe when the pipe rises directly up through the overhead flooring with no horizontal run.

pits (20 in. square by 16 in. deep) of the size that might be excavated through a 6-in. diameter slab hole.

In summary, there is no experimental basis for believing that a large pit (beyond that which can be excavated through a 6-in. slab hole) will be helpful in improving SSD performance in poor-communication houses. The only theoretical basis for considering large pits in residential cases, i.e., the hope of intersecting remote fissures or permeable strata, will be very site-dependent; the potential for actually intersecting fissures/ strata by making a large pit has not been demonstrated.

As a result, preparation of a large opening in the slab to excavate a large pit will not commonly reflect good practice. Consequently, this approach is addressed here only briefly, insofar as it differs from the approach in Section 4.5.1. This approach is considered here because some mitigators may occasionally face geological situations where it may be applicable.

Making the hole through the slab. If the pit is to be left open, rather than being filled with aggregate -- so that the restored slab will be suspended over an open cavity -- the pit should probably be no more than about 4 x 4 ft, or perhaps somewhat larger, for structural reasons. (If a much larger pit is planned, the mitigator should check with a structural expert to ensure that the suspended slab will have adequate strength.) The mitigator will have to decide how large the slab hole should be to enable excavation of a pit of the desired size. A slab hole of about 2 x 2 ft to 3 x 3 ft might be reasonable to provide the needed access.

A jackhammer or an electro-pneumatic roto-stop hammer would be logical tools for creating such a hole in the slab. The jackhammer or electro-pneumatic could be rented for this purpose. Alternatively, if the mitigator has a coring drill, the large slab hole could be created by drilling multiple adjacent 6-in. circular holes. It is recommended that the hole be prepared with the sides at an angle (i.e., with the hole dimensions being smaller at the bottom of the slab than at the top). The resulting slant in the vertical face of the old concrete will help support the weight of the new concrete which will be poured to restore the slab.

As discussed in Section 4.5.1, the installers should use care to avoid rupturing any unexpected utility lines beneath the slab. Use of a safety cut-off switch would help avoid damage to utilities.

Excavating a pit. Once the hole has been created in the slab, the excavation of the pit can be accomplished using a variety of tools. If the underlying soil is hard-packed or is rock, the jackhammer (or other appropriate power equipment) can be used to break up the soil.

The pit would be excavated out under the slab to the desired dimensions (e.g., 4 x 4 ft). If the pit is not at least 3 x 3 ft, there is no point in making the large hole through the slab, since a pit approximately 3 x 3 ft can often be excavated through a 6-in. slab hole. If it is known that a permeable stratum underlies the surface soil at some reasonable depth, an effort might be made to penetrate down to that stratum.

It is suggested that the pit be left as an open cavity when the slab is restored. This will maximize the benefits of the pit, providing the greatest reduction in suction loss resulting from acceleration of the soil gas to pipe velocity through the pit. The other option, back-filling the pit with clean, coarse aggregate, would simplify the restoration of the slab, but would somewhat increase the suction loss.

Mounting suction pipes through the slab. Some type of plywood or sheet metal form must be prepared to permit new concrete to be poured, to restore the slab. While a variety of approaches are possible for preparing this form, one approach that has been used with some success in this application (Cr92a) is to prepare a piece of plywood slightly larger in cross-section than the slab hole, with a 4.5-in. hole cut generally near the center to accommodate the suction pipe. This plywood is then cut in half, so that it can be fit down through the slab hole. Masonry nails or spikes are partially driven laterally into the side-wall of the slab hole at intervals around its perimeter. The two sections of the plywood form are then pulled up tightly against the underside of the slab, by attaching wire to the plywood and pulling this wire tight around the protruding nails.

Another approach for supporting the plywood form would be to cut the plywood so that it is slightly larger than the bottom dimensions of the slab hole, but smaller than the dimensions at the top of the slab (Bro92). The plywood will thus lodge against the sloped sides of the slab hole near the bottom of the slab. With this approach, the re-poured segment of slab will necessarily be slightly less than 4 in. thick.

The suction pipe is placed vertically down through the 4.5-in. hole in the plywood sheet. The pipe is inserted such that its lower end is just below the sheet and the underside of the slab (i.e., such that the pipe ends in the open space within the hole, and is not resting on the bottom of the hole). The pipe is supported in this suspended position by hangers, strapping, or clamps attached to the joists or flooring overhead, using one of the methods illustrated in Figures 16 and 17.

Fresh concrete is then poured on top of the plywood, restoring the slab, with the pit remaining as an open cavity underneath. While the concrete is soft, a groove perhaps 1/2-in. deep is tooled around the perimeter of the slab hole, where the new concrete meets the original slab; a groove is also tooled around the circumference of the suction pipe, where it penetrates the new concrete. When the concrete has set, these grooves will be flooded with flowable urethane caulk, in an effort to keep these seams gas-tight. A follow-up visit to the house will be required to conduct this subsequent caulking step.

Over time, the plywood or sheet metal support may decay or rust away. This is not a problem. After the concrete covering the hole is dry, its weight will be borne by the slanted sides of the original slab.

As one alternative to this approach, the pit could be back-filled with clean, coarse aggregate. The suction pipe would then

US EPA ARCHIVE DOCUMENT

penetrate into this aggregate, to a depth just below the underside of the slab. A layer of plastic sheeting, or perhaps of roofing material, would be placed over the top of the aggregate, to prevent the wet concrete from settling down into the aggregate and plugging the pore space. The slab would then be restored, as above, with grooves tooled to permit subsequent caulking.

4.5.3 Vertical Pipe Installed Into Unused Sump Pit Indoors

On occasion, a mitigator may encounter a basement having a sump pit having no drain tiles and never containing any water. Such unused sump pits may be encountered, for example, in cases where codes require installation of a sump but where the particular lot involved has no drainage problem, so that the builder or homeowner did not install drain tiles or a sump pump.

On those occasions where unused sump pits are encountered, they may be used as ready-made holes through the slab for a SSD system, avoiding the need for drilling a hole with a rotary hammer or a core drill. The pit would be capped with a gas-tight cover, and a suction pipe would be installed through this cover, as discussed in connection with sump/DTD systems in Section 5. If drain tiles were present in the sump, this would be a sump/DTD system; but since no tiles are present in this case, it is considered a SSD system.

It must be ensured that the unused sump pit is communicating with the sub-slab region. For example, if the walls and bottom of the sump are formed by a plastic sump liner having no penetrations, or by poured concrete, the SSD pipe would be drawing suction on a closed box; the suction would not be effectively extending under the slab. In such cases, it would be necessary to ensure that a number of holes were drilled through the walls of the sump lining, at a level immediately beneath the slab.

Cost analysis indicates that the presence of such an unused sump pit will not reduce the installation cost of a SSD system (He91b, He91c). The savings in labor achieved by avoiding the need to drill a hole through the slab will be approximately offset by the increase in labor required in sealing a cover over the sump. In fact, the installation cost will be somewhat higher with the sump pit, by an amount equal to the materials cost for the sump cover. However, where such a pit exists, it still will generally make sense to use the pit as the SSD suction hole. Even if the suction pipe were to be installed through the slab at another location instead, the sump pit would still have to be capped, to prevent radon entry and to reduce the amount of house air that would flow into the SSD system through an uncapped sump.

4.5.4 Horizontal Pipe Installed Through Foundation Wall from Outdoors

In some cases, it may be desirable to insert the suction pipes horizontally through the foundation wall from outdoors, such as illustrated in Figure 2. This approach will reduce the aesthetic impact indoors, but can increase the impact outdoors (especially when compared with interior suction pipes having an exhaust stack rising inside the house). As discussed in Section 4.2.1, installation of the pipes horizontally from outdoors is most likely to be attractive when: a) the slab is near grade level, so that less excavation is required to get below the slab outdoors; b) interior finish is extensive, so that the cost, complexity, and aesthetic impact of interior pipes would be significant; and/or c) the house is not amenable to an interior stack with a fan in the attic (including houses having flat roofs or cathedral ceilings with no attic), so that the aesthetic impact of an exterior fan and stack would be unavoidable even with interior suction pipes.

Exterior horizontal pipes would most commonly be considered in slab-on-grade houses, or basement houses having slabs only moderately below grade. However, cases have been reported where exterior penetrations have been used in full basement houses, due to extensive finish in the basement and due to homeowner preference (Kl89).

Selecting the specific hole location. The criteria for selecting the specific location for the suction hole on the exterior face of the foundation wall will be similar to those for selecting the specific slab locations for vertical interior pipes. There must be adequate space beside the house to permit excavation and use of the drilling equipment (e.g., away from bushes, patios, and chimneys). The location must permit convenient mounting of the fan and routing of the exhaust stack. For example, the pipe should not be mounted directly under windows through which the fan and stack would be visible from indoors; it should be located so that the piping will be least obtrusive outdoors.

The exact depth beneath the slab at which the hole is drilled may require judgement. For example, if the foundation stem wall for a slab-on-grade house is hollow block capped with a solid L block, as shown in Figure 2, it could be desirable to drill through the course of hollow block immediately below the L block. But the hole should not be too far below the slab, since it is desired to access any aggregate layer immediately beneath the slab.

In basement houses, where the foundation wall generally does not extend below the slab, the suction pipe will usually penetrate beneath the footing. The pipe can also be routed beneath the footing in slab-on-grade houses when the footing is very shallow (in mild climates).

As with vertical interior pipes, installers using horizontal exterior pipes must be alert to sub-slab utility lines or forced-air ducts beside the foundation wall. If it is planned to auger some distance horizontally beneath the slab -- so that the SSD pipe will extend beneath the slab instead of ending immediately beside the foundation wall -- attention must be paid to utility lines that might be beneath the slab within that distance.

Drilling the hole through the foundation wall. If piping having a 4-in. inside diameter will be used, a hole 4.5 to 6 in. diameter must be drilled horizontally through the foundation wall of slab-on-grade houses. Some excavation will usually be necessary to expose the wall beneath the slab, and working space immediately beside the wall may thus be limited. Especially where the foundation wall is block, and is hence rela-

US EPA ARCHIVE DOCUMENT

tively easy to drill through, the rotary hammer drill will usually be the appropriate tool; a series of 1/2-in. holes would be drilled around a 4.5- to 6-in. circumference, and the interior chiseled out).

Even where the wall is poured concrete 8 in. thick, the rotary hammer drill may still be preferred. To use a coring drill on poured concrete walls, it would be necessary to clear a sufficient area to accommodate the drill, and to block up or otherwise support the drill in a horizontal position while drilling the hole. The coring drill bits are often only 6 in. deep; consequently, it would be necessary to drill into the wall to a depth of 6 in., chip out the still-attached core, then drill the remaining 2 in. through the 8-in. wall. As a result, it will usually not be convenient to try to operate a coring drill sideways to prepare the hole, even when a coring drill is available.

If it is desired to extend the hole horizontally for some distance beneath the slab, an auger can be used to carefully extend the hole horizontally through the sub-slab fill. If the hole is to extend several feet, powerful augers can be rented or purchased. For shorter distances (2 ft or less), a smaller auger bit that can be driven by a power drill could be used (the same auger bit that can be used to excavate sub-slab pits). The smaller auger bit could be driven by a right-angle drill if there is not sufficient clearance to accommodate the shaft of the auger straight on. The drill must have a torque adjustment feature, so that the drill does not begin spinning and injure the operator if the auger binds.

Such augering has been found to be desirable in poor-communication slab-on-grade houses with block foundations in Florida (Fo90, Fo92) and in Arizona and southern California (Kl92). In those houses, the apparent problem was air leakage into the system through the block foundation walls when the suction point was near the wall. Such leakage appears clearly to be less of a problem in good-communication houses and in houses with poured concrete foundations. Even in some poor-communication slabs on grade with block foundations, it will sometimes be possible avoid the need for augering, based upon the experience in New Mexico (Tu91b).

If augering is performed, and if the hole through the foundation wall is not immediately below the slab, e.g., if it has been lowered in order to miss a course of solid L blocks, care must be taken that the augered hole be horizontal. If the hole is angled upwards, toward the bottom of the slab, a low spot will be created in the piping near the exterior face of the foundation wall. Condensed moisture could accumulate at that point, potentially blocking flow.

To avoid damaging sub-slab utility lines, it would be desirable to initially drill only to the interior face of the foundation wall. Sometimes forced-air ducts are located immediately beside the foundation wall. It could be helpful to use a safety cut-off switch and perhaps a GFI (as discussed in Section 4.5.1, *Drilling the hole through the slab)* with the rotary hammer, coring drill (if used), or auger.

If the horizontal pipe is being installed from outside a basement house, the foundation wall usually will not extend beneath the slab; the slab will be resting on the footings. As a result, the effort described above to drill through the foundation wall will be unnecessary. In this case, excavation through the soil under the footing will be required, by hand or using an auger.

Excavating a pit beneath the slab. If the suction pipe is to end near the interior face of the foundation wall (i.e., if the hole has not been extended with an auger), a sub-slab pit should be excavated inside the foundation wall. As discussed in Section 4.5.1, this should be done regardless of whether or not there is aggregate under the slab. Possible pit sizes, and the procedures for excavating the pit are generally the same as those discussed in that earlier section for vertical/interior pipes.

The pit should always extend upward to the underside of the slab, as illustrated in Figure 2, ensuring that the suction pipe is communicating with the layer of aggregate (if present) beneath the slab. This is particularly important in cases where the hole has been drilled through the wall some distance below slab level. Even where there is no aggregate, there may be a region of improved communication immediately under the slab, due to subsidence of the soil or to an air gap associated with sub-slab insulation, if present.

Especially where communication is poor, the pit should also extend as far toward the interior of the slab as possible.

Investigators in Florida recommend that the pit *not* extend to the left and right, exposing the interior face of the foundation wall, when the walls are constructed of hollow block (Fo90). Air leakage into perimeter suction pipes through block walls was a significant problem in Florida, and the concern was that exposure of the interior face of the block wall would exacerbate this problem. Leakage would be much less of a concern with poured concrete foundation walls.

The pit should extend downward below the wall hole. This will reduce the risk of the pipe becoming blocked by soil or water if the soil walls of the pit shift over time, or if water collects in the pit due to condensation in the pipe or due to wet seasons.

If the hole is extended using an auger, a pit might be created at the end of the augered hole by manipulation of the auger, angling it up and down, and side to side.

Mounting suction pipes through the wall. When this configuration is used in slab-on-grade houses, the suction pipe would be mounted horizontally through the foundation wall from outdoors. Unless an extended hole has been augered, the pipe should terminate within a few inches of the interior face of the wall, within the open space of the excavated pit. In basement houses, the pipe is mounted horizontally under the footing, again terminating in the sub-slab pit.

The suction pipe must not be sloped upward toward the underside of the slab. The greatest risk of this occurring is when the hole through the wall has been made at some distance below slab level. Such a slope would create a low point in the piping at the exterior face of the wall where

US EPA ARCHIVE DOCUMENT

condensate would accumulate, blocking gas flow. Where the horizontal pipe is at a depth beneath the aggregate layer, communication between the pipe and the aggregate must be provided by extending the suction pit upward, rather than by sloping the pipe upward. In fact, sloping the pipe slightly downward beneath the slab to facilitate condensate drainage may be desirable, if this is possible.

The horizontal pipe should be well supported on the exterior of the wall by soil underneath. Unless this pipe is being connected by a horizontal run to other suction points around the house perimeter, the outer end of this pipe will be directed 90° upwards to a fan and an exterior stack above grade, as discussed in Section 4.6.5. Even if this fan and stack are supported by brackets or strapping, some of the weight will likely be borne by the end of the horizontal pipe. If this end of the pipe is not adequately supported underneath, the torque applied by the fan/stack weight could cause the end of the pipe beneath the slab to shift upwards, creating the low point for condensate accumulation discussed in the preceding paragraph.

The gap between the outer circumference of the horizontal pipe and the foundation wall must be closed, to reduce the amount of ambient air that would be drawn down through the (usually shallow) soil into the system. Since this annular opening will be on the vertical face of a wall, flowable urethane caulk will not be applicable, since it would just drain away. Gun-grade (non-flowable) polyurethane caulk could be one choice. The wall and hole surfaces would be cleaned as appropriate (e.g., the drilling dust vacuumed up), to remove loose dust and dirt that would hinder bonding of the caulk to the wall surfaces. The caulk should be worked into the horizontal gap to a reasonable depth, to increase the contact area for bonding.

Expanding closed-cell foams are perhaps the most common choice to seal this gap. Foams could be particularly appealing where the foundation wall is hollow block. Properly injected, the foam could seal not only the gap at the exterior face of the wall, but also the gap between the interior hollow-block core and the pipe, and the gap at the interior face of the wall (under the slab). In this way, the foam would block not only the ambient air flowing down through the soil along the exterior face of the wall, but also ambient and indoor air that might be drawn down through the block cores. The foam might be injected into the cavity through the gap between the suction pipe and the exterior face of the wall (Bro92), or through small specially drilled holes in the exterior face above and below the pipe (Kl92). When using foam to seal the entire block cavity, some type of support may have to be placed inside the block below the pipe in order to prevent the foam from dropping down into the cavities below.

If foam is used, care must be exercised to ensure that the foam does not expand into the sub-slab pit in a manner which blocks the suction pipe. Such blockage of the pipe has occasionally been observed when the pipe ends immediately beside the interior face wall (under the slab). To be sure, the foam should be injected before the vertical riser is connected to the horizontal pipe, so that the horizontal pipe can be inspected and rodded out, to detect and clear away any foam that may have expanded into the sub-slab end of the pipe.

The use of foam to close this gap for block walls has the advantage of reducing air leakage into the system through the block cores, but at the same time, necessarily reduces any block-wall depressurization component of this SSD system. Use of foam in this manner has generally appeared to be advantageous, or at least not detrimental, in terms of the radon reduction performance of the system; i.e., any BWD component was either insignificant or unnecessary. In only one study house (a large slab on grade with good aggregate and sub-slab forced-air supply ducts) did the BWD component appear to be important, with the use of foam creating a measurable deterioration in system performance (House 1 in He91a).

In addition to gun-grade polyurethane caulk and expanding foam, cement or quick-setting mortar have also sometimes been used to seal the gap around the suction pipe (An92, Bro92). One mitigator reports that termites and ants have sometimes been observed to chew through expanding foam in some regions, so that cement might be preferred at least for the outer seal for this below-grade application in such regions (Bro92).

In cases where the hole has been extended with an auger, and a horizontal pipe is being inserted for some distance beneath the slab, it will be particularly important to rod out the pipe after it has been inserted. The end of the pipe beneath the slab may have become plugged with soil as the pipe was being pushed through the augered hole. This problem can be reduced by inserting the pipe only part way into the augered hole (Kl92), although it must be inserted far enough so that the open end of the pipe is reasonably isolated from the interior face of the block wall (thus avoiding the excessive air leakage into the system through the wall that the augering step was intended to avoid).

After the suction pipe has been installed and the exterior excavation around the pipe is being re-filled, it would be advisable to pack the back-filled dirt in an effort to reduce the possible leakage of ambient air down through loose fill and into the system.

Rigid PVC, PE, or ABS piping is a reasonable choice for exterior suction pipes, just as for pipes installed indoors. However, one mitigator (Kl89, Kl92) reports success using flexible corrugated polyethylene and polypropylene piping for the horizontal below-grade penetrations through slab-on-grade foundation walls, beneath basement footings, and beneath slab-on-grade footings in cases where the footings are shallow. This corrugated piping is similar to the material commonly used for drain tiles, except it is not perforated. Use of the flexible piping simplifies installation. It can be considered for use in this exterior application because it is supported horizontally by the underlying soil, potentially avoiding sagging; and, being below grade, there is less concern regarding leakage through the difficult-to-seal seams between piping segments, and regarding damage to the flexible material. This flexible piping is then connected to rigid PVC piping to serve as the riser on which the fan is mounted above grade.

US EPA ARCHIVE DOCUMENT

Where non-perforated flexible piping is used for exterior suction pipes, it must be buried at least 18 in. below grade (Kl92) to avoid excessive ambient air leakage into the system through the unsealed seams between piping segments. Also, care must be taken to lay this flexible piping on a reasonably flat-bottomed channel, since it can sag, providing low sites for condensate accumulation.

4.5.5 Horizontal Pipe Installed Through Foundation Wall from Inside Basement

Perhaps the most common use of horizontal suction pipes is to treat adjoining slabs on grade in basement houses having such adjoining slabs. The pipes are inserted horizontally through the stem wall separating the basement and the adjoining slab, at a level just below the adjoining slab. Treating the adjoining slab in this manner avoids the need to install pipes in the living area on the adjoining slab (which will usually be highly finished), and greatly simplifies connection of the SSD piping treating the slab on grade into the suction pipes treating the basement slab.

A typical configuration for installing a horizontal suction pipe beneath an adjoining slab on grade from inside the basement and for connecting the horizontal pipe into a basement SSD system is illustrated in Figure 18.

The methods for installing horizontal suction pipes through the stem wall from inside the basement are similar to those described in Section 4.5.4, for the case where the pipes are installed from outdoors. There are only a few differences. In selecting the specific location for drilling through the stem wall, some attention will now be required to the nature of the basement finish. Assuming that the horizontal pipe is to be connected to a vertical riser from the basement slab, the hole in the stem wall must be located near a basement riser (or in a position to otherwise facilitate connection to a riser).

As with exterior horizontal penetrations, a rotary hammer drill may be the best approach for making the hole through the stem wall, especially if the stem wall is hollow block. If the wall is poured concrete and if it is desired to make the hole by supporting a coring drill sideways, sufficient space must be available for using the drill in this position and for supporting it in this manner from below or above. See Section 4.5.4, *Drilling the hole through the foundation wall.*

The pit excavated beneath the adjoining slab should extend upward to the underside of that slab. It should extend outward and downward enough to prevent the horizontal pipe from becoming blocked with soil if the sides of the pit shift over time.

With the configuration shown in Figure 18, the horizontal pipe could be sloped in either direction to avoid condensate buildup in the pipe. Any condensate in the horizontal pipe could drain either to the pit beneath the slab on grade, or to the vertical riser in the basement.

Care is needed in sealing the horizontal pipe into the stem wall to reduce the amount of basement air drawn into the SSD system around this penetration. Thus, whether the wall is poured concrete or hollow block, the gap in the face of the wall toward the basement (the right-hand face in Figure 18) must always be carefully sealed.

When the stem wall is block, mitigators report that significant amounts of air can be drawn into the system via the hollow blocks, even when care has been taken to seal the gap around the penetration in the face of the block inside the basement (Bro92, Mes92). This leakage, which adds a BWD component to the system, will reduce the suction that can be maintained in the SSD piping. The reduced suction can be a problem in many cases, especially when sub-slab communication is marginal or poor and when maximum suction is thus needed in the piping. As a result, it is often important that the gap also be sealed at the "outer" face of the block; the outer face is defined here as the face against the soil under the adjoining slab, or the left-hand face in Figure 18. Sealing of the outer face will reduce the amount of air from inside the leaky block cavities being drawn into the pit and thus into the system.

If the hole through the "inner" face of the stem wall (inside the basement) is sufficiently large, this could facilitate injecting foam around the gap in the outer face by inserting a wand from inside the basement, before the inner face is sealed (Mes92). The foam might seal not only the gap in the outer face, but also the block cavity around the pipe to further insure that air leakage via the block wall will be reduced. One mitigator recommends drilling small holes through the inner face of the blocks just above and below the suction pipe, and injecting foam into the block cavity through these holes (Kl92). To aid in foaming the block cavity, it may be necessary to stuff some type of supporting material into the void beneath the pipe, to prevent the foam from dropping down into the voids below as it is being injected. Care must be taken to ensure that the foam does not expand into the pit beneath the adjoining slab in a manner which blocks the suction pipe.

The below-grade horizontal pipes discussed in Section 4.5.4 are supported by the soil beneath the pipe. When the horizontal pipe is inside the basement, it may be supported at its connection with the vertical riser when the horizontal pipe is as short as suggested in Figure 18. If the horizontal pipe is not near a riser, and must run for some horizontal distance before connecting to a riser, this horizontal run will have to be supported by hangers or strapping as discussed in Section 4.5.1 (Figure 16) and Section 4.6.3.

4.5.6 Suction Pipe Installed from Inside Garage

In houses having an adjoining garage, it would be very convenient to be able to install the mitigation system in the garage. Especially when the garage is a one-story slab on grade with its own roof, placement of the suction pipes and the fan entirely in the garage would eliminate the aesthetic impact in both the living area and outdoors, and would commonly result in the entire system being remote from the bedroom wing.

In basement houses having walk-out basements with a garage slab on the same level as the basement, the garage slab will often be integral with the slab of the adjoining basement. In

US EPA ARCHIVE DOCUMENT

US EPA ARCHIVE DOCUMENT

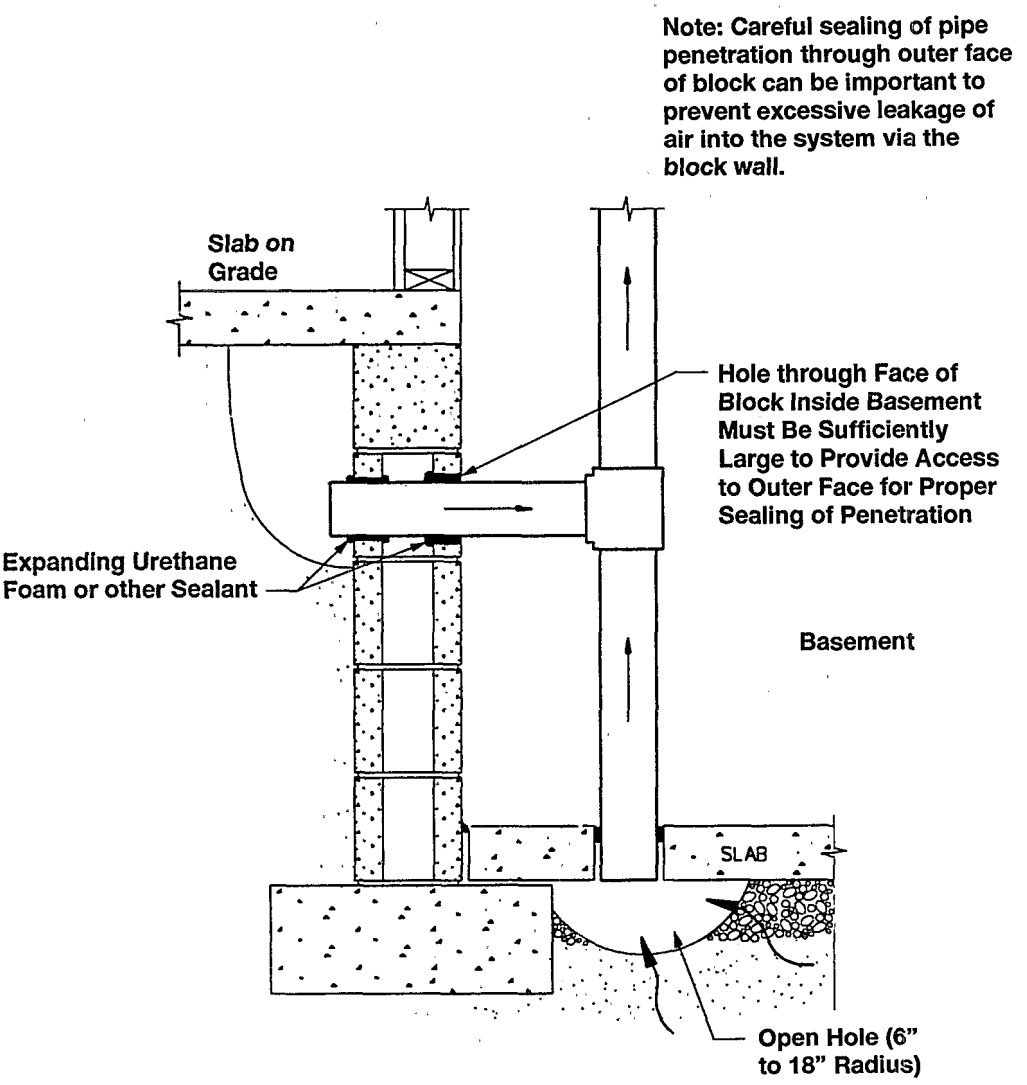

Figure 18. A typical configuration for treating an adjoining slab on grade using a horizontal suction pipe penetrating the stem wall from inside the basement.

these cases, if communication is good, vertical suction pipes inside the garage may well treat the entire slab. In basement houses having an adjoining slab-on-grade garage, suction on the garage slab will likely have only limited impact on the living area, and the garage will thus be of no use for locating suction pipes. (However, in this latter case, the garage could still provide an excellent location for possible routing of the exhaust stack and mounting of the fan, eliminating the need for a stack inside the living area or outdoors.)

Of primary concern in this section are slab-on-grade houses having an adjoining slab-on-grade garage. In such houses, the living-area slab will essentially always be a few inches higher than the garage slab, for code reasons. In some cases, there will be a foundation wall (supporting the living-area slab) separating the region under the garage slab from the region under the living-area slab. In other cases, there will not be a separating foundation wall, but there will still be the step between the slabs; the concrete for both slabs may have been poured at the same time, with a form having been used to create the step.

In either case, the communication between the garage slab and the living-area slab will be uncertain and will vary from house to house. This will always be true in houses having generally poor sub-slab communication. It can also be true in cases where there is aggregate beneath the living-area slab, especially when there is a separating foundation wall. Therefore, it

is uncertain whether a vertical suction pipe installed down through the garage slab will effectively treat the living area. Sub-slab suction field extension testing, together with experience with other houses in the area, would be necessary to determine whether the house might be adequately treated with vertical pipes in the garage.

On occasion, slab-on-grade houses have been encountered where the step down to the garage slab occurs in the garage several feet away from the frame wall which separates the garage from the living area. That is, the living-area slab seems to extend several feet into the garage. The potential for success with a vertical suction pipe in the garage is increased in such cases, if the pipe is installed in that portion of the living-area slab which extends into the garage. But in most cases, the step down to the garage slab occurs right at the frame wall, or within less than 1 ft of the wall; in these cases, a vertical pipe through the living-area slab within the garage is not practical.

Where vertical pipes in the garage will not adequately treat the adjoining living area, the garage can still be considered as a possible site for installing a suction pipe beneath the living-area slab on grade, inserting the pipe horizontally or at an angle from inside the garage. The approach for installing such pipes from inside the garage is discussed in the remainder of this section.

In some cases when there is a foundation wall between the living-area and garage slabs, steps as tall as 12 in. have been observed between the two slabs. A step this tall would provide a clearance of roughly 8 in. between the bottom of the 4-in.-thick living-area slab and the top of the garage slab, enough to install a 4-in. diameter suction pipe. In these cases, a horizontal pipe could be installed through the foundation wall beneath the living-area slab, using the same considerations as apply when the horizontal pipes are installed from outdoors (see Section 4.5.4). The only difference would be that, in these cases, no excavation would be needed to expose the exterior face of the foundation wall beneath the living-area slab.

But in most slab-on-grade houses having adjoining garages, there will be a much smaller drop (perhaps only 4 in.) between the living-area and garage slabs. One logical approach for inserting a suction pipe beneath the living area from inside the garage is to install the pipe at an angle. This approach is illustrated in Figure 19, adapted from Reference Fo90.

Whether a mitigator chooses to angle a pipe from inside the garage in slab-on-grade houses, or whether the pipe is instead installed vertically in the living area, for example, inside a closet or in a utility room, will depend upon a variety of factors. These factors include the availability of pipe locations inside the living area, the required pipe location to achieve the desired suction field distribution under the slab, the resulting pipe routing required if the pipe is in the living area, and the preferences of the mitigator and homeowner. Location of the pipe in the garage becomes more preferred when the house has multiple stories and/or no attic, complicating pipe routing and fan placement with indoor suction pipes.

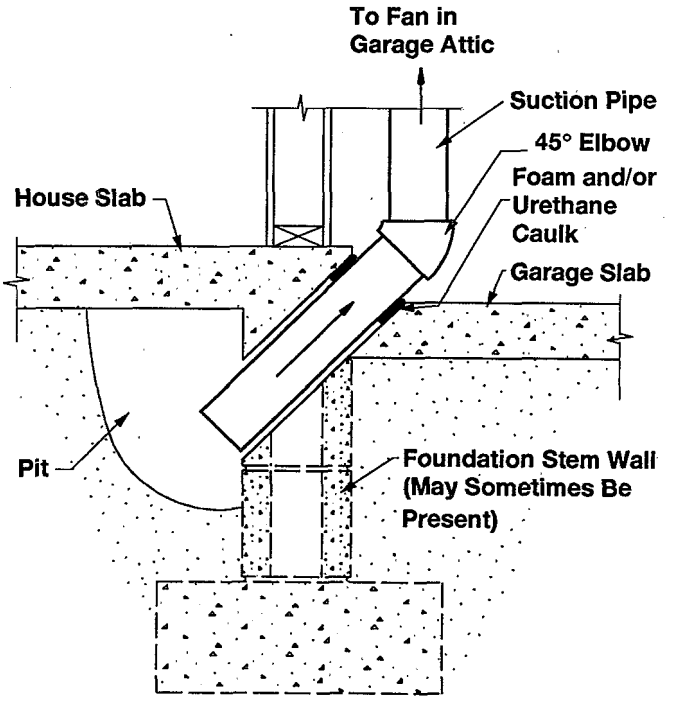

Figure 19. One possible method for angling a suction pipe beneath the living-area slab of a slab-on-grade house, from inside an adjoining garage (adapted from Reference Fo90).

Selecting the specific hole location. The criteria for selecting the specific hole location along the junction between the garage and the living area will be generally similar to those discussed in Section 4.5.4, for penetrations from outdoors. The location will be selected to avoid obstructions in the garage, and with consideration to the anticipated routing of the exhaust piping within the garage.

Preparing the hole. If the pipe is indeed inserted at a 45° angle right at the junction of the two slabs, as shown in Figure 19, the hole will have to penetrate concrete perhaps 8 in. thick or more. If a foundation stem wall is present, and if it were poured concrete, the lower portion of the hole could be penetrating a layer of concrete even thicker still.

A rotary hammer drill could be used to prepare this hole, in the manner described in earlier sections. Or, a coring drill could be supported at a 45° angle. Since coring drill bits are often only 6 in. deep, it could be necessary to core the first 6 in., chip out the still-attached core of concrete, and then core the remainder of the distance.

Excavating a pit. The pit beneath the living-area slab will be excavated by hand through the diagonal hole in the concrete. The methods for this excavation will be similar to those discussed in Section 4.5.1. The pit should extend upward as necessary to reach the underside of the living-area slab, intersecting any aggregate layer. When aggregate is not present under the living-area slab, the importance of this pit increases.

US EPA ARCHIVE DOCUMENT

The pit should be sufficiently deep and wide such that shifting of the dirt sides of the pit over time or entry of water into the pit during wet seasons will not block the suction pipe.

Mounting the suction pipe. The suction pipe is inserted through the angled hole, as shown in Figure 19. The end of the pipe beneath the slab should be in the open space within the pit, above the bottom of the pit. The gap between the outer circumference of the pipe and the sides of the hole must be sealed with non-flowable polyurethane caulk or with expanding closed-cell foam. This angled section of pipe will be held in this position by the hangars/strapping which will be securing the piping run overhead in the garage.

4.6 Design/Installation of the Piping Network and Fan

After the individual suction pipes are installed by one of the methods discussed in Section 4.5, they will need to be connected to a fan which will exhaust outdoors. There are alternative methods for configuring the overall piping network and fan/exhaust system, and there are a variety of approaches for the detailed design and installation of the piping and fan/exhaust system. Sections 4.6.2 and 4.6.3 address the design and installation of the piping network leading from the individual suction pipes to the fan; Sections 4.6.4 and 4.6.5 cover the mounting of the fan and the design and installation of the exhaust piping/stack on the exhaust side of the fan.

When there is more than one SSD suction pipe, these pipes will generally be joined together by a horizontal run of PVC piping. The resulting single manifold pipe must be routed to a single fan. Usually, the amount of soil gas flow drawn by SSD systems is sufficiently low such that it is not necessary to use more than one fan for the entire system. Multiple fans will be warranted only in cases where it is not practical to manifold the suction pipes together for one reason or another, and it decided to install two or more separate systems (with different pipes routed to different fans) rather than trying to connect the pipes.

For the purposes of this discussion, there are two fundamental types of exhaust configuration:

1. *Interior stack.* A representative version of this configuration is illustrated in Figure 20. When the suction pipes are inside the house, the piping can be routed up through the interior of the house, usually through closets or other inconspicuous areas on the floors overhead, or via an existing utility chase. If there is an attic, the fan should be mounted in the attic, exhausting through the roof. Mounting the fan in the attic protects the fan from the weather (especially important when the fan is not UL rated for exterior use), and improves aesthetics outdoors. If there is no attic, the fan could be on the roof.

2. *Exterior stack.* One representative version of this configuration is shown in Figure 21. In basement houses, the exhaust piping penetrates the basement band joist or foundation wall just above (or below) grade. It is recommended that the fan be mounted on this piping outdoors near grade, and that a stack on the discharge side of the fan be installed to release the exhaust above the eaves. This approach usually minimizes the aesthetic impact inside the house, but increases the impact outdoors due to the stack extending up outside the house.

One common variation of the exterior stack configuration, which can be used when a basement house has an adjoining slab-on-grade garage, is to route the piping through the basement band joist into the garage. The discharge stack is then directed up inside the garage through the garage roof, assuming that there is no living area above the garage. In this approach, referred to here as a "garage stack," the fan could be mounted in the garage attic, if present, or near the garage slab at the base of the stack.

Mitigators have tried a variety of other variations to the exterior stack configuration, with the primary intent of minimizing the aesthetic impact of the exterior stack. In one variation, the exhaust piping penetrating the basement shell is extended horizontally below grade for some distance away from the house, where the exhaust pipe then comes above grade at a less visible location. In another variation, the exhaust stack has been deleted altogether, with the fan discharging immediately beside the house at grade; in some cases, the fan has even been placed inside the basement to further reduce the impact outdoors. Elimination of the exhaust stack, and location of the fan inside the basement, are inconsistent with EPA's interim mitigation standards (EPA91b).

Where the suction pipe has been installed horizontally through the foundation wall from outdoors, as discussed in Section 4.5.4 above, the exhaust configuration will almost always involve an exterior stack. Of course, the exact configuration would necessarily look different from that illustrated in Figure 21 for vertical indoor suction pipes.

4.6.1 Suction Loss in the Piping Network

Calculation of the suction loss in the piping network was discussed previously in Section 4.3.2, in connection with the selection of the suction pipe diameter. It is also referred to in Section 4.4, in connection with selection of the appropriate fan. In this current section, this calculation is covered more definitively, in connection with the overall design of the piping network (such as illustrated in Figures 20 and 21) in conjunction with the selection of pipe diameter and fan performance.

The suction loss in the piping network will depend upon: a) the velocity in the pipe, which in turn depends upon the volumetric flow rate (in cfm) and the pipe diameter; and b) the length of piping and the number and nature of the flow obstructions, such as fittings. (It will also depend upon the pipe wall friction, which would be higher for corrugated flexible piping than for smooth-walled PVC; only smooth-walled pipe is being considered in this discussion.) The system fan has to be selected to provide the needed sub-slab depressurizations after compensating for the suction loss in the piping.

In practice, most mitigators will have little occasion to perform piping loss calculations in residential applications. The

US EPA ARCHIVE DOCUMENT

US EPA ARCHIVE DOCUMENT

Notes:

1. **Horizontal piping run in attic shown only for illustration. Stack could have penetrated *straight upward through* roof, if there were sufficient headroom to install fan at that location.**

2. **Electrical wiring to fan illustrated in later figure.**

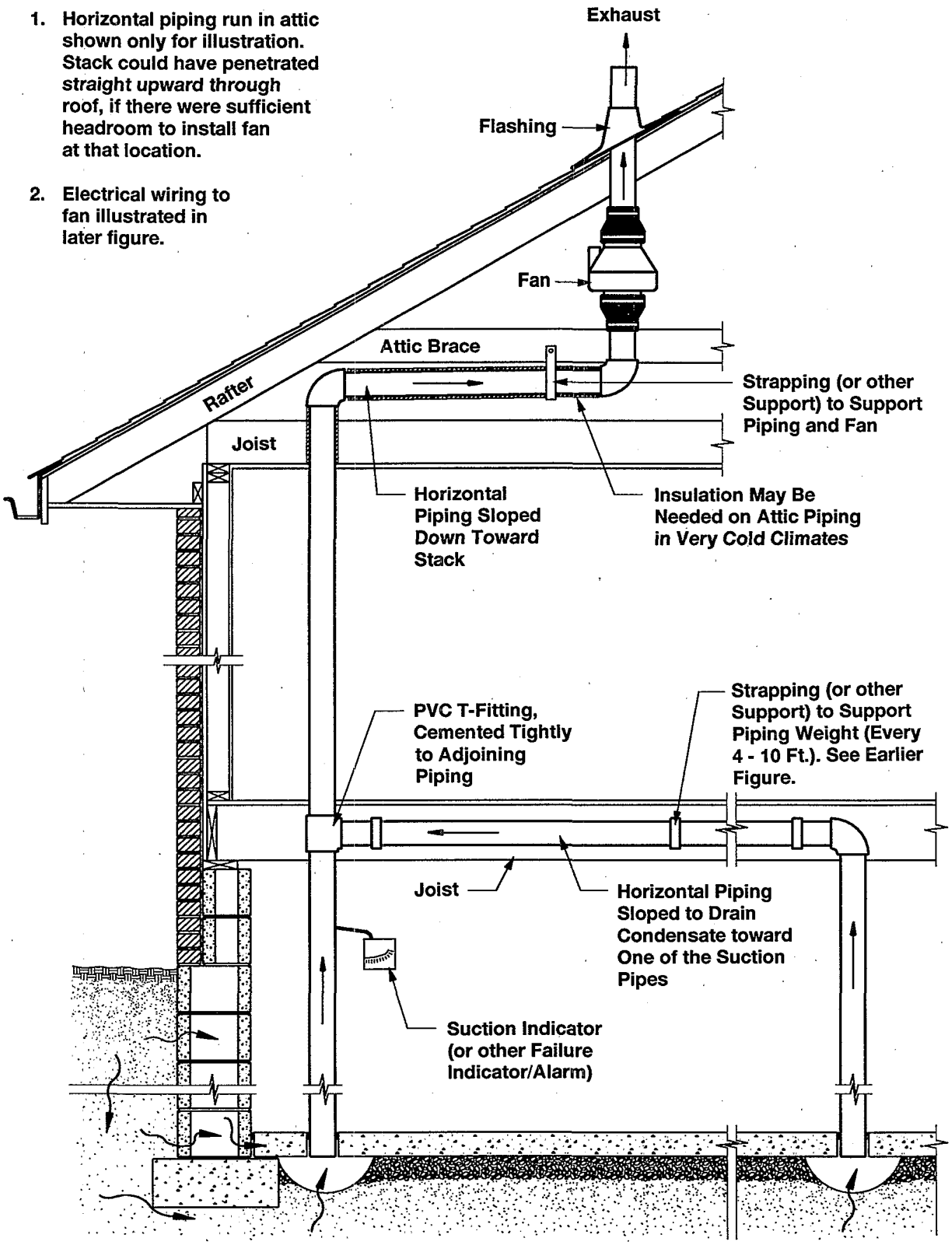

Figure 20. One representative SSD piping configuration illustrating an interior exhaust stack.

US EPA ARCHIVE DOCUMENT

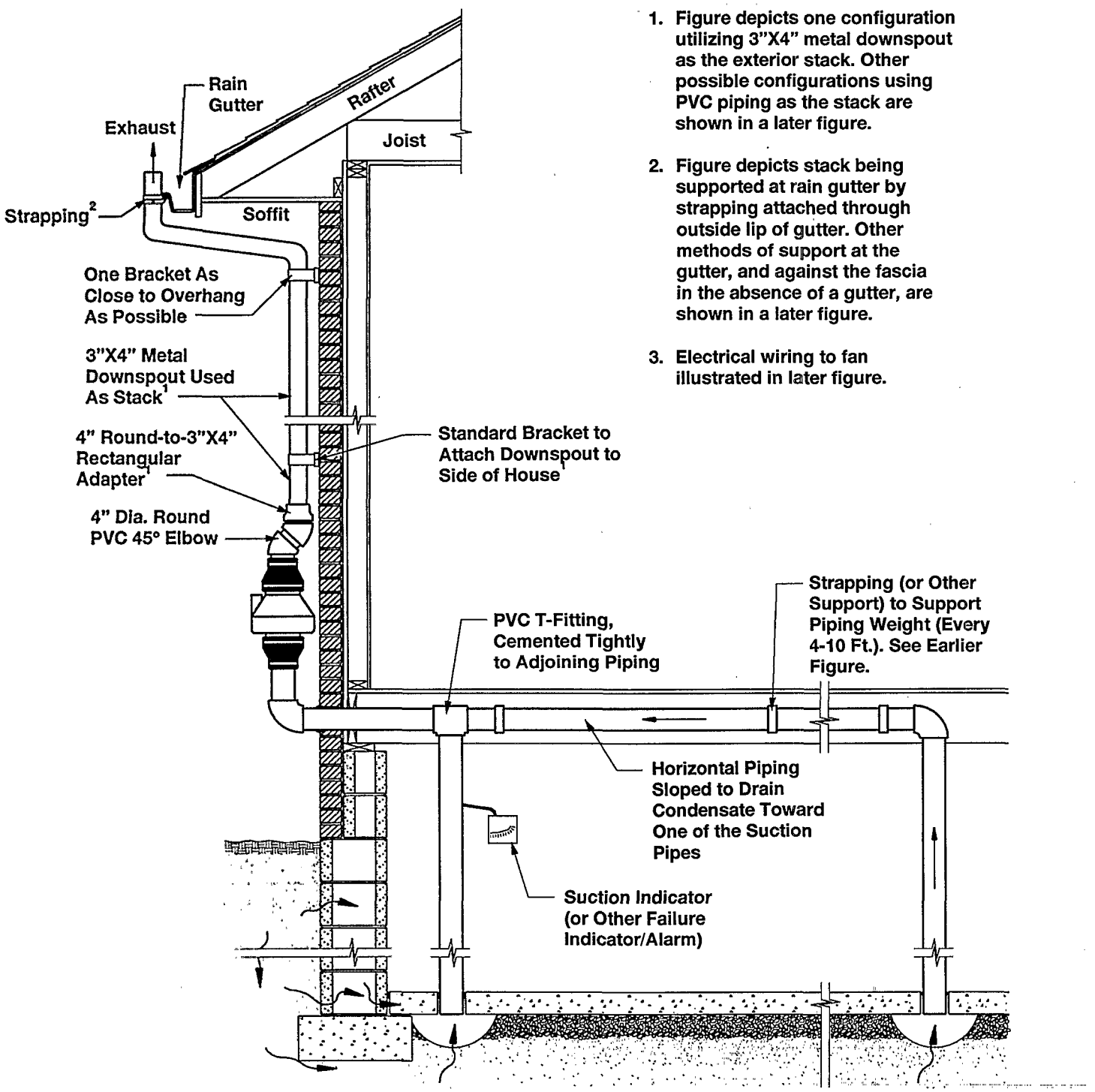

Figure 21. One representative SSD piping configuration illustrating an exterior exhaust stack.

most common use will be in cases where it is necessary to determine whether 2- or 3-in. diameter piping can be substituted for 4-in. piping in selected cases without encountering undue suction losses. In some cases, where sub-slab communication is marginal or where the piping network is particularly long or convoluted, it may also be helpful in fan selection (e.g., to assess whether a higher-suction radial blower of the type discussed in Section 4.4.2 might be necessary). And when interpreting the more extensive sub-slab flow diagnostics described in Section 3.5.1 to aid in selecting a fan, suction loss calculations would be required to convert the sub-slab depressurizations measured at the baseline test hole to the suctions at the fan inlet (so that a desired fan performance curve could be plotted).

On the other hand, it is unlikely that a mitigator will often have much choice regarding the length of piping and the number and type of fittings. The piping configuration will probably often be determined by other factors: the need to locate suction points in order to achieve an adequate sub-slab suction field distribution; the location and nature of finish inside and around the house; and the practical routing of the exhaust stack. Assuming that the suction pipe location and the piping configuration have been selected intelligently to begin with, there will probably not be much flexibility for reducing the length or number of fittings if calculations suggest that suction losses may be significant.

And, in general, there will probably not often be a major concern with suction losses in the piping network in residential applications, if 4-in. piping has been used and if one of the 90-watt tubular fans (or equivalent) has been used, as discussed later.

Thus, the mitigator should locate the suction points and design the system piping in an effort to reduce the length of piping (upstream and downstream of the fan) and to reduce the number of fittings, consistent with the need to achieve adequate suction field extension and to have and acceptably aesthetic system. With this approach, suction loss calculations of the type discussed below will usually be limited to cases where small-diameter piping or where long or convoluted lengths of piping are being considered.

Calculation procedure. The suction losses in the piping will result from two factors: 1) friction between the air and the walls of the pipe, calculated as loss per unit length of straight pipe; and 2) turbulence created by flow obstructions in the piping system, namely, fittings such as elbows, tees, and size reducers.

The losses in straight pipe due to wall friction can be calculated based upon standard fluid flow considerations, depending upon the friction resistance of the pipe wall. The losses per 100 ft of smooth-walled pipe having average wall friction were presented in Figure 13 in Section 4.3.2. The figure presents the suction loss as a function of volumetric flow rate and pipe diameter, i.e., as a function of gas velocity.

Suction losses associated with flow obstructions are handled by expressing that loss in terms of the loss in an equivalent length of straight pipe. For many fittings, a L/D ratio can be obtained from the literature, that is, the length of straight piping (L) that would give the same friction loss as that caused by the fitting, divided by the diameter of the piping (D). The losses associated with various fittings are presented in Table 4, derived from Reference Ca60. The figures in the table include both the L/D ratio for the fitting, and the equivalent length of straight piping that would give the same suction losses as a function of pipe diameter.

Note that the suction loss in a 90° elbow can vary dramatically, depending upon whether the elbow makes a smooth vs. a sharp turn. The internal dimensions of many commonly available PVC elbows appear to be a cross between a smooth turn (on the outer circumference) and a mitered turn (on the inner circumference). Thus, the actual L/D ratio for the elbows commonly used in mitigation applications will probably be somewhere between 9 and 65.

Other common obstructions include size expanders or reducers, for example, the 4- to 6-in. couplings used to connect fans having 6-in. unions onto 4-in. piping. The suction gains due to such expanders and the losses due to reducers, which depend upon velocity, can be calculated based upon tables and equations in Reference Ca60.

Once the piping network has been designed for a given SSD installation, such as illustrated in Figures 20 and 21, the

Table 4. Number of Feet of Straight Pipe Required to Create the Same Suction Loss As Created by the Flow Obstruction in One Fitting

Type of Fitting	L/D Ratio	Equivalent Feet of Pipe, for Different Pipe Diameters		
		Pipe Diameter 2 in.	3 in.	4 in.
Tee	~60*	10 ft	15 ft	20 ft
90° elbow				
- smooth round curve	9	1.5 ft	2 ft	3 ft
- mitered (sharp turn)	65	11 ft	16 ft	22 ft
45° elbow				
- smooth round curve	4.5	0.8 ft	1 ft	1.5 ft
- 3-piece elbow	6	1 ft	1.5 ft	2 ft

* This L/D ratio, for gas flow around the 90° bend within a tee fitting, varies slightly with gas velocity. The ratio for flow straight through the tee would be less than that for the flow making the turn from the branch.

US EPA ARCHIVE DOCUMENT

approximate suction loss that will occur in the network can be calculated as follows:

1. Convert the flow obstructions in the anticipated fittings in the total piping network (upstream and downstream of the fan) into an equivalent length of straight piping, using Table 4;

2. Add this equivalent length to the total length of straight piping anticipated (upstream and downstream of the fan);

3. Obtain from Figure 13 the approximate suction loss per 100 ft of straight piping, for the anticipated pipe diameter and system volumetric flow.

4. Multiply the total number of feet derived in 2) above, divided by 100, times the loss per 100 ft obtained in 3). This will be the total estimated suction loss in the piping network at the projected air flow.

If there are several 90° elbows or tees in the piping network, it would not be unusual for these fittings to make a larger contribution to the total suction loss than that from the straight piping.

Note that this calculation procedure addresses the piping and fittings on the discharge (pressure) side of the fan, as well as those on the suction side. Such piping and fittings on the pressure side could result, e.g., the exterior stack shown in Figure 21. The flow resistance on the pressure side will create a back pressure that will reduce flows, and will reduce the fan's ability to develop suction. Thus, flow resistance on the pressure side must be considered on the same basis as resistance on the suction side, for the purposes of calculating the suction that can be established.

Interpretation of results. The total piping suction loss calculated in 4) should be subtracted from the suction that can be maintained by the planned fan at the flow rate anticipated in the system, obtained from the fan performance curve. This difference will be the suction that the fan will maintain in the suction pipe at the point where the pipe penetrates the slab. It will also roughly equal the suction existing immediately under the slab in the sub-slab pit; at typical flows, there will be only a small suction loss resulting from the acceleration of the gas in the pit to pipe velocity. (See the calculation procedure for suction losses due to "abrupt entrances" in Reference Ca60.)

If the calculated suction in the pipe near the slab is unacceptably low, then steps may need to be taken to improve it. If small-diameter piping has been planned, it may be necessary to switch to larger-diameter piping, at least in some parts of the system (such as the manifold pipe to which the individual suction pipes connect). One could also switch to a fan which can develop higher-suction at the anticipated flows, such as those discussed in Sections 4.4.2 and 4.4.3, or could mount two standard tubular fans in series. One could also consider reducing the length of piping or number of fittings, although, in many cases, it is doubtful that there would be sufficient flexibility in adjusting the piping configuration to achieve substantial reductions in suction losses by this method.

It is not possible to rigorously define the minimum acceptable suction in the pipe near the slab that would trigger design changes. The real measure will be how well this suction extends beneath the slab. This will vary from case to case, depending upon communication and flow. As a rough rule of thumb based upon experience, with a 90-watt in-line duct fan in houses having reasonably good communication, the pipe suction near the slab should probably not fall much below 0.5 in. WG; however, where communication is good, lower suctions may be acceptable. In poorer-communication cases, a higher suction would be desirable. (A higher suction would also be expected; since flows are often quite low in poor-communication houses, large pressure drops through the piping would be less likely.)

The use of Figure 13, in accordance with Step 3) above, requires some estimate, prior to system installation, of what SSD system flows will be. If no pre-mitigation diagnostics have been performed other than a visual inspection, this estimate will be very rough, based upon the mitigator's experience with other similar houses in the area. If a simple (qualitative or semi-quantitative) measurement of sub-slab flows has been made using a vacuum cleaner prior to mitigation, as discussed in Section 3.5.1, the estimate of SSD flows would be somewhat more reliable, but still fairly rough. Only if the more extensive, quantitative, pre-mitigation sub-slab flow measurements have been made with the diagnostic vacuum cleaner and only if the piping system suction losses have been calculated based upon the suction-vs.-flow characteristics of the sub-slab region as discussed in Section 3.5.1 will the flow estimates in the piping be reasonably accurate.

Evaluation of need for suction loss calculations. At the beginning of Section 4.6.1, it was stated that there will probably not often be a major concern with suction losses in the piping network in residential applications, if 4-in. piping has been used and if one of the 90-watt tubular fans (or equivalent) has been used. The calculation procedure described above can be used to support this statement.

Suppose that sub-slab communication is good and that, as a result, flows are at the high end of the SSD range (100+ cfm). At those flows, losses in the 4-in. piping would be 0.6 in. WG per 100 ft, from Figure 13 in Section 4.3.2. The 90-watt fans would maintain about 1 in. WG at their inlet at 100 cfm. Thus, the fans could tolerate a piping length (including the equivalent length contributed by fitting resistances) of 100 to 150 ft while still maintaining several tenths of an inch WG under the slab, which may well be sufficient suction in good-communication cases. A piping length of 120 ft would correspond to, for example, 40 linear ft of straight 4-in. piping plus four 90° elbows or tees; this could often be sufficient for a system in a two-story basement house requiring some horizontal run in the basement or attic in addition to the vertical rise up to the roofline.

In fact, with an extended length of piping, flows might drop below 100 cfm, and suction correspondingly increase in accordance with the fan performance curve. But again, with good communication, some reduction in flow will often not be a problem, unless the high flows are resulting from excessive leakage through a major unclosed entry route in the slab, or

US EPA ARCHIVE DOCUMENT

through highly permeable soil. In those cases, more suction points or a larger fan might be warranted.

Suppose, on the other hand, that sub-slab communication is poor, and that flows were at the low end of the SSD range (about 20 cfm). At this flow, the 90-watt fans develop suctions at the fan of perhaps 1.7 in. WG, and, from Figure 13, the suction loss in 4-in. piping is roughly 0.03 in. WG per 100 ft. At such low suction losses, the fan would still be maintaining about 1.5 in. WG suction under the slab even if the piping run were 300 ft equivalent. It is difficult to imagine a piping configuration so long and convoluted as to have an equivalent length greater than this, even with multiple suction points and numerous elbows and tees. Consequently, piping length/configuration becomes almost irrelevant with 4-in. piping when flows are so low. The only question in a case such as this is whether more suction pipes or a higher suction fan may be needed due to the poor communication.

In summary, whether communication is good or poor, it is doubtful that a mitigator will often encounter a piping configuration so long or convoluted in residential applications that it would be justified to increase SSD piping diameter above 4 in., when a 90-watt tubular fan is being used. Accordingly, when the intent is to install an SSD system with 4-in. piping with such a fan, piping suction loss calculations will usually not be necessary.

4.6.2 Considerations in Pipe Routing Between Suction Points and Fan

If there is more than one SSD suction pipe, the multiple pipes will usually be connected by a horizontal run of piping. This piping run will then continue to a point where it can penetrate the shell of the living area and lead to a single fan. Two representative routings are illustrated in Figures 20 and 21.

This piping should be routed so that it does not interfere with normal traffic patterns in the house, or with the adjustment, operation, or maintenance of any mechanical equipment. (The one exception to this can be the sump pump in sump/DTD systems, discussed in Section 5.) It should also be as aesthetically acceptable as possible.

Connection of multiple pipes in basements having unfinished or suspended ceilings. In an unfinished or partially finished basement, vertical interior suction pipes will normally extend upward to the basement ceiling, to the level of the perimeter band joist which rests on top of the foundation wall. If a vertical suction pipe is to be connected to one or more other suction pipes elsewhere in the basement, a horizontal pipe is run across an unfinished ceiling (or above a suspended ceiling) to permit the suction pipes to be manifolded together.

If one suction point is by the front or rear wall of the house and if a second pipe is needed, it would be logical to try to locate the second pipe directly opposite the first on the opposite wall (between the same two overhead floor joists), if this location would provide the needed suction field distribution. In this case, the horizontal pipe joining the two points would be parallel to the floor joists (which usually run from front to rear), and the horizontal piping run could be up between the joists, making it as unobtrusive as possible. This is the configuration illustrated in Figures 20 and 21.

If the two suction points are on opposite ends of the house, so that the connecting horizontal run is perpendicular to the floor joists, the horizontal pipe will necessarily have to be below the joists. Four-in. horizontal pipe running perpendicular to the floor joists would *never* be run through cored holes through the joists, not only because of installation effort involved, but also because of structural concerns, as discussed in Section 4.6.3 below. If there is a support beam running from one end of the house to the other, providing support to the floor joists in the middle of the basement, the horizontal piping can logically be run beside this support beam, just below (and perpendicular to) the floor joists. If there are a number of suction pipes along the length of the basement, horizontal legs from the various pipes can tap into the central horizontal pipe along its length.

Selection of where the piping exits the basement. At some convenient location, the collection pipe must be routed up through the house to a fan in the attic, as in Figure 20. Or, the pipe must be routed through the band joist to a fan outdoors or in the garage, as in Figure 21. (Occasionally, a mitigator may choose to penetrate the foundation wall below the band joist.)

Where the exhaust piping will rise through the house, the location for this interior stack will be selected to provide the most convenient and aesthetic route (e.g., up through a utility chase, or through closets on the floors above). It would be nice to avoid routing the pipes through bedroom closets, if this were possible, to avoid the risk that the flow noise in the stack might disturb sensitive occupants.

If the piping is to exit through the band joist, the location for this penetration would be selected based on a number of criteria. Existing constraints may prevent all of these criteria from being simultaneously met in the optimum manner. These criteria include:

- Achieving the shortest and least visible horizontal run inside the house, avoiding indoor obstructions.
- Minimizing the visual impact of the fan and stack outside the house; this will often mean that the penetration should be on the rear (or perhaps side) of the house, preferably where the fan at the base of the stack might be concealed behind shrubbery.
- Avoiding obstructions on the exterior face of the house that would interfere with extension of the exterior stack up to the eave; thus, the piping cannot penetrate directly beneath any windows (through which the stack could be seen from inside the house), and especially not directly below overhung bay windows.
- Ensuring that the final discharge point (usually just above the eave directly above the penetration) will be at least 10 ft away from upstairs windows, skylights, or other openings in the house shell, consistent with EPA's

US EPA ARCHIVE DOCUMENT

interim radon mitigation standards (EPA91b), as discussed in Section 4.6.4.

- Avoiding location of the fan, the stack, or the final discharge point near bedrooms, if possible. The noise associated with the fan and stack, although often subtle, can occasionally be objectionable to sensitive occupants, especially if generated near a bedroom window. The noise results from: fan noise heard at the fan, and fan noise transmitted inside the exhaust pipe and heard at the discharge point; stack vibration transmitted from the fan, or vibration in the house siding to which the stack is attached; flow noise in the stack, if the gas velocity is high enough; and turbulence in the exhaust escaping the pipe. Noise can be a particularly important consideration when using one of the high-suction/ low-flow fans discussed in Section 4.4.3, since these tend to be noisier than the tubular fans.

- Locating the penetration relatively near to an electrical junction box inside the house, to facilitate connection of the fan wiring into the house circuitry, discussed in Section 4.6.5.

Where the fan and stack are inside an adjoining garage, many of the above criteria will be more easily met. The fan and stack will not be visible outside the house, avoiding concerns about reducing the visual impact outdoors. There should be increased flexibility in routing the stack around any obstructions in the garage. The piping can be routed horizontally in the garage attic if necessary to ensure that the exhaust is at least 10 ft from any openings in the living area. The fan and stack will likely be away from the bedroom wing, unless there are bedrooms above the garage.

Pipe routing considerations when there is only one SSD suction point. If there is only one suction pipe penetrating the slab, the only horizontal run needed in the system would be the run over to the band joist penetration or to the location where the interior stack is to rise through the house. The location of the suction point would normally be selected in an effort to minimize this horizontal run. Where the stack is to extend up through the house, it could be possible to locate the suction point directly under the path of the stack, so that no horizontal run would exist at all.

Diameter of the piping network. In houses where there are 4-in. diameter suction pipes, the horizontal piping which connects the individual suction pipes will generally also be 4-in. diameter piping. As discussed in Section 4.6.1, flows in SSD systems should almost never be high enough to warrant the use of larger-diameter piping for the central horizontal pipe. Where such high flows are encountered in a SSD system, the problem is probably one of leakage through slab openings or piping joints, suggesting a need for sealing rather than for larger piping.

In poor-communication houses where a number of 2-in. or 3-in. diameter vertical suction pipes have been installed, it may be advisable to use 4-in. piping for the horizontal collector, depending upon the actual flows and the fan used. Although flows in individual suction pipes will be low, the combined flows from all pipes could be sufficiently high to create an unacceptable suction loss in a 2-in. diameter horizontal collection pipe.

Requirement that horizontal piping runs be sloped. *At all locations in the system, the horizontal piping must slope slightly downward* ***towards*** *the vertical suction pipes, so that condensed moisture can drain away. There must be no low points in the system piping where condensate can accumulate* (unless provisions are made for drainage, as discussed later). Soil gas has a high moisture content. This moisture will condense inside the pipes whenever the piping run is exposed to a temperature below that of the soil gas, which will occur during cold weather in piping runs which are outdoors or in unheated areas such as attics. Ensuring that all horizontal piping is sloped back toward the vertical suction pipes will permit any condensed moisture to flow back down beneath the slab through these risers.

If the horizontal piping were sloped down *away from* the risers, the condensate could accumulate at the low end of the piping. As a minimum, such accumulation would reduce the effective diameter of the piping, thus reducing the flow and increasing the suction loss. This could potentially reduce system performance, even if the slope appears to be only slight. In the extreme case, if the slope is great enough, the water could block flow entirely, thus rendering the system completely ineffective.

The degree of slope towards suction pipes can be fairly slight. Some mitigators use slopes as great as 1 in. per 4 to 8 linear ft when the horizontal run is relatively short, consistent with sewer codes. However, this degree of slope could sometimes be inconvenient in long horizontal runs of 4-in. piping; for example, a 30-ft run perpendicular to the floor joists would terminate at a suction pipe 6 in. below the joists if the slope had to be 1 in. per 5 ft. In fact, since the flows involve only condensate, the more rigorous slopes specified in sewer codes are probably not necessary for this application. Some mitigators use more gradual slopes, ranging from 1 in. per 10 ft to 1 in. per 40 ft, with one mitigator proposing 1 in. per 100 ft.

Approaches when the piping must be routed over or under obstructions. A low point in the horizontal piping can be created if the piping has to jut up or down in order to pass over or under some utility piping or other obstruction along the basement ceiling. If the piping forms an inverted "U" to pass ***over*** the obstruction, the horizontal segment on the far side of the obstruction could become a low point, unless there is a vertical suction pipe on each side of the inverted "U" to drain the moisture away. If the piping forms a "U" to pass ***under*** the obstruction, this "U" creates a trap which could accumulate water over time. The placement of the vertical risers and the routing of any horizontal piping should be selected in an effort to avoid such low points in the piping.

Figure 22 illustrates two approaches for addressing this issue where potential low points are unavoidable. If the piping forms a "U" over the obstruction, as in Figure 22A, it would be optimal to place a vertical suction pipe on each side of the "U," with the horizontal run on either side of the "U" sloping

US EPA ARCHIVE DOCUMENT

US EPA ARCHIVE DOCUMENT

downward toward the appropriate riser. If the piping forms a "U" beneath the obstruction, as in Figure 22B, the most fail-safe approach would be to locate a suction pipe directly under the "U" as shown.

If it is not practical to locate vertical pipes as suggested in Figures 22A and B, a less preferred option would be to drill a hole at least 1/2 in. diameter through the bottom of the piping at the low point. Flexible tubing of this diameter should be firmly mounted into the hole, leading to some location where the condensate can drain: for example, a nearby vertical suction pipe, a floor drain, or the voids inside a nearby hollow-block wall. Tubing at least 1/2 in. diameter is required to reduce the risk of plugging. Care must be taken to avoid kinks in the tubing. Also, drain tubes should not be located in unheated areas where the tube might become plugged with ice. This design may result in some suction loss in the system, due to air being drawn into the pipe through the tubing; however, unless the system is marginal to begin with, this small air leak should not noticeably impact system performance.

Vertical mounting of fans. Whether the piping is routed out through the band joist or up inside the house, the piping should always turn upward prior to the point at which the fan is mounted, so that the fan will be mounted vertically. Vertical fan mounting will ensure that condensate will drain out of the fan and not accumulate in the fan housing.

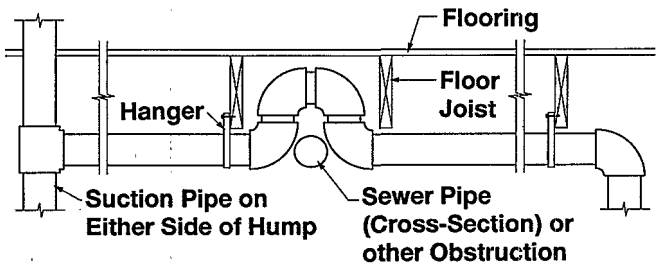

A) Piping run is routed over the obstruction; suction pipes on both sides of hump permit condensate drainage to sub-slab.

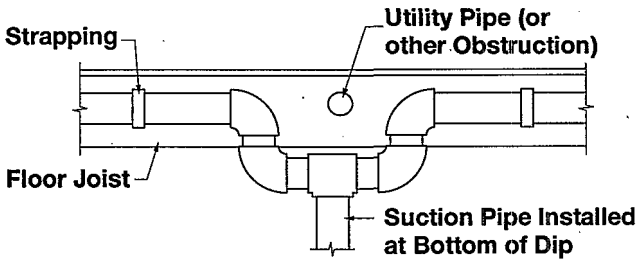

B) Piping run is routed under the obstruction; suction pipe at low point in dip permits condensate drainage to sub-slab with no risk of pluggage.

Figure 22. Two of the alternative methods for providing proper drainage when a horizontal piping run must be routed over or under obstructions, creating low points in the piping.

Pipe routing considerations for basements with finished ceilings. The preceding discussion focused on basement houses which were partially or largely unfinished, where any required horizontal piping could be run across an unfinished ceiling or above a suspended ceiling. Where the ceiling and walls are finished with sheetrock and/or panelling, the piping installation may be more complicated and more expensive, in order to reduce the aesthetic impact.

One option would be to install the horizontal piping runs in the basement, as before, but providing any additional finish that would be required (including framing around the piping, as necessary) in order to make the installation aesthetically acceptable. A second option would be to take each suction pipe straight up through the house (e.g., through closets on the floors above) into the attic, avoiding any horizontal runs in the basement; if there is more than one pipe, the horizontal runs to connect the pipes would be located in the attic. See the later discussion of attic piping in slab-on-grade houses.

A third option for handling extensively-finished basements would be to take each pipe out through the band joist, and to connect each pipe to its own fan outdoors, avoiding the complications involved in connecting the pipes. As a fourth option, the pipes could be taken out *below* the band joist, so that they penetrated the shell below grade level, in which case the multiple pipes might be connected via a horizontal loop of pipe buried around the perimeter outdoors. In this case, a vertical riser for the fan would be tapped into the loop at a location suitable for an exterior fan and stack (see *Selection of where the piping exits the basement* above). A fifth option would be to install the suction pipes horizontally from outdoors, discussed later.

Pipe routing considerations for slabs on grade. In slab-on-grade houses having an attic, especially houses having only one story, it will commonly be most convenient to install vertical suction pipes inside the house, extending up through the ceiling into the attic. Horizontal piping runs can be made in the attic relatively easily, to connect the different suction pipes (if there is more than one), and to route the piping to a point where the fan can be mounted (on a vertical segment of piping inside the attic) such that the fan exhaust then penetrates straight up through the roof on the rear slope.

Another option would be to install the suction pipes horizontally from outdoors.

Routing considerations with attic piping runs. With attic piping runs in either basement or slab-on-grade houses, the routing of the horizontal piping should be selected to avoid any obstructions in the attic, and to be out of the way of expected traffic patterns, to the extent possible. Again, care must always be taken that the horizontal piping slope slightly downward toward the riser pipes with no low points, to permit drainage of condensate.

If there is only one riser pipe entering the attic from the living area, as in Figure 20, the only horizontal run needed in the attic would be that required to route the piping to the point in the attic where exhaust pipe can penetrate up through the roof. This will usually also be the point at which the fan is mounted, in the manner illustrated in the figure. This generally should be somewhere away from the bedroom wing in an effort to avoid fan noise there, especially when one of the high-suction/low-flow fans is to be used. This location should also be on the rear slope of the roof, so that the exhaust pipe will not be visible from the street. Other considerations in fan location include: ensuring that the exhaust point is at least 10 ft away from openings in the house shell, such as skylights or windows in adjoining wings, in accordance with EPA's interim standards (EPA91b); adequate headroom in the attic to mount the fan; access for maintenance; and convenient access to a power supply. In climates having heavy snowfall, it has also been suggested that the exhaust pipe penetrate the roof slope at a point sufficiently close to the peak so that substantial ice dams will not build up behind the pipe, causing damage to the roof or shingles (Kl92). In any climate, it is desirable to penetrate as far up on the roof slope as possible to reduce re-entrainment.

If the single riser pipe can penetrate into the attic directly below the roof penetration point, there would not have to be any horizontal attic run at all.

Where there is more than one vertical riser pipe entering the attic, these pipes must be connected by a horizontal run in some logical pattern. If there are a number of suction pipes entering along the length of the attic, a horizontal collection pipe can be located down the center of the attic, with horizontal legs from the various suction pipes tapping into the horizontal pipe along its length. The horizontal collection pipe should be mounted at an elevation slightly above that at which the risers end, so that the horizontal legs tapping into the collection pipe will be sloped downward toward the risers. At some convenient location, the collection pipe must be routed to the point in the attic where the fan will be mounted and where the fan exhaust can penetrate through the roof. In systems having relatively high flows, connection of the fan into the horizontal collection pipe at a central location between the vertical suction pipes will help ensure comparable suctions in the individual suction pipes.

As with the basement piping, 4-in. diameter pipe will often be desirable for the horizontal collection pipe (depending upon flows and fan capability), even in cases where flows are low enough such that 2- or 3-in. piping is adequate for the individual suction pipes.

Pipe routing considerations with horizontal penetration of suction pipes from outdoors. In those cases where the suction pipe penetrates horizontally through the foundation wall from outdoors, it will be common for the piping to rise straight up from the horizontal suction pipe, with the fan mounted vertically on this riser, in the manner indicated in Figure 2. Where there are multiple horizontal suction pipes, they may be connected by a horizontal length or loop of piping buried around the perimeter of the house. One representative configuration for such a horizontal length of piping is illustrated by the three-dimensional inset in Figure 2. The riser and fan would then tap into this loop at an acceptable location (see *Selection of where the piping exits the basement* above). To avoid condensate buildup, this connecting loop of piping must be buried at an elevation slightly above that at which the horizontal suction pipes penetrate through the wall, so that the "horizontal" suction pipes are in fact sloped slightly downward. If flexible piping is used for any portion of the below-grade horizontal run, care must be taken that the floor of the trench is flat, so that no part of the piping sags to form a low point for condensate buildup.

4.6.3 Considerations in Pipe Installation Between Suction Points and Fan

A number of factors should be considered when the piping runs are installed.

- The rigid PVC, PE, or ABS piping is commonly obtained in 10-ft lengths, which must be cut to the desired length or spliced together with straight fittings (or couplings) where runs longer than 10 ft are needed. Other PVC fittings commonly used in the piping network are tees, 90° elbows, 45° and 22.5° bends, Y fittings, and size reducers or expanders (e.g., 2-in.-to-4-in. adapters, for connecting a 2-in. diameter suction pipe to a tee in a 4-in. diameter central collection pipe).

- The fittings must be of the same material (PVC, PE, or ABS) and of the same weight (thin-walled or Schedule 40) as the piping.

- All piping and fittings must be carefully cemented together with cement formulated for the particular material used (PVC, PE, or ABS), to ensure a permanent and gas-tight connection. Simple pressure fits will not provide a sufficiently gas-tight seal. While simple pressure fits might sometimes look tight, a significant fraction of the fan capacity could be consumed in drawing house air into the piping through the leaky joints. In addition, some simple pressure fits could become disconnected due to wear and tear over time.

- As emphasized previously, all horizontal piping runs should be slightly sloped (1 in. drop for every 4 to 100 linear ft), so that condensed moisture will drain back down into the sub-slab region via the suction pipes. Low points in the piping, where condensate could accumulate, should be avoided. If low points are unavoidable, a vertical suction pipe should be installed under the low point, if possible, as shown in Figure 22; otherwise, a drain tube at least 1/2 in. diameter should be installed.

- The piping network must be properly supported. Horizontal runs should be supported every 4 to 10 ft. Several alternative methods for providing such support to horizontal runs are shown in Figure 16, using pipe hangers or plastic strapping attached to the overhead floor joists in basements. See also the discussion associated with these figures, toward the end of Section 4.5.1. Methods for supporting horizontal runs in attics, attaching the hangers or strapping to braces and rafters in roof trusses, are

US EPA ARCHIVE DOCUMENT

illustrated later in Section 4.6.4. The piping should never be supported against any other utility piping, ducting, or mechanical equipment that may subsequently be moved during servicing or relocated.

Vertical runs can be supported from wooden members of the house using methods such as those illustrated in Figure 17. Vertical suction pipes can also be supported at the slab, by a method such as those shown in Figure 15.

Even the simplest piping network should be supported at, at least, two locations. One of these locations can be at the slab. One of the support locations should be near the vertical suction pipe, to ensure that it does not drop into the sub-slab pit, and one should be near the fan (see Sections 4.6.4 and 4.6.5).

Strapping can effectively support the weight of the piping, but will usually not provide significant support against lateral movement of the piping. Where strapping is the primary support, a mitigator may wish to include some measures to reduce lateral movement. Lateral support will usually be provided by the slab penetration, and by the penetration through the band joist (exterior stacks) or overhead flooring (interior stacks). Caulking the seams around the penetration through band joist for exterior stacks, required in any event to prevent water entry, may further reduce lateral movement of the pipe at that location. Likewise, caulking of the seam around the penetration through the overhead flooring with interior stacks will provide lateral support as well as improving appearance (Bro92).

- In supporting the pipes from wooden members in the basement and attic, the pipes may have to be isolated from the wooden member to reduce the transmission of vibration to the wooden members, thus reducing noise. The hangers and strapping shown in the various figures ensure that the piping does not contact the wood. Where there is "hard" contact with the wood, as with the pipe clamp resting on the flooring in Figure 17, some cushioning material should be placed between the clamp and the flooring.

- As discussed in Sections 4.6.4 and 4.6.5, fans are usually mounted vertically on the rigid piping using flexible couplings, e.g., in the form of 4-to-6-in. adapters in cases where the 90-watt fans (with 6-in. diameter couplings) are connected to 4-in. piping. These flexible PVC couplings, which have the appearance of rubber, greatly reduce the transmission of fan vibration to the piping, thus reducing noise. The flexible couplings must be clamped tightly to both the fan and the piping to avoid leaks.

- In very cold climates, any piping runs in unheated but protected space (such as attics and vented crawl spaces) may need to be wrapped with insulation. Such insulation will reduce the amount of condensation inside the pipe, and, in particular, will reduce the risk that this condensate will freeze and plug the pipe with ice. Pipe insulation in attics and vented crawl spaces appears less important in climates that are only moderately cold.

- In cold climates, some mitigators find it important to insulate exterior piping (outdoor stacks), to avoid ice blockage of the exterior stack during cold weather. For such exterior use, one mitigator (Wi92) reports using the black closed-cell foam insulation commonly used around the refrigerant lines running to outdoor air conditioning compressors. This tubular insulation can be obtained in diameters that fit around the outside of PVC piping. Another approach that has been suggested for insulating outdoor piping involves use of Schedule 40 PVC piping having a foam core; this piping, which is not pressure rated, has foam in the center with layers of rigid PVC on the inner and outer surfaces. In the extreme, a mitigator could enclose the PVC stack using framing or aluminum chases, as discussed later, so that regular fiberglass insulation (not suitable for outdoor use) could then be used around the piping.

  In an effort to avoid the need for insulation, some mitigators try to place exterior stacks on the southern side of the house, to increase sun exposure (Kl92). Where aluminum downspouting is used as the exterior stack for appearance purposes, insulation of the stack would be somewhat more difficult, and would likely defeat the key purpose of using the downspouting, namely, to make the stack unobtrusive.

- Some mitigators also consider insulating certain indoor piping under the following conditions:

  - Interior stacks rising through bedroom closets, to reduce noise. Such insulation becomes increasingly important when the flow velocity in the pipe reaches about 1,000 to 1,500 ft/min, at which velocity increasing numbers of occupants find the noise objectionable.

  - To reduce possible "sweating" on the outside of the pipes during hot, humid weather, in cases where such condensate on the outside of the pipes could cause damage to house finish. Insulation for this purpose would be important for piping running through finished areas or above suspended ceilings.

- Where a suspended ("drop-down" or "false") ceiling is present, location of horizontal piping runs above the suspended ceiling is a relatively simple method for installing the piping which greatly reduces the visual impact of the system.

- Where pipes are installed in finished space, or outside the house, it will sometimes be necessary to enclose the pipes for aesthetic purposes, depending upon homeowner preferences. One option is to box the pipes in using furring strips and sheetrock, painted to match the pre-existing finish. One mitigator (Jo91) has reported using pre-fabricated th sided aluminum chases with flanges, obtained in 10-l ıgths, which can be attached to the wall enclosing piping. These pre-fabricated metal

US EPA ARCHIVE DOCUMENT

chases are relatively quick to install, and avoid the need for carpentry.

- Where PVC, PE, or ABS piping extends outdoors, if it is not boxed in, some mitigators paint the pipe (for appearance purposes and to protect it from UV radiation), or coat it with a UV protectant. Only UV-protected Schedule 40 piping (or piping which is inherently UV-resistant) should be used outdoors.

- Holes for the piping through wooden members such as band joists are commonly made using a hole saw (a circular blade that fits onto a power drill). Holes through sub-flooring can be made with a standard hand saw, or with a hole saw.

- Where a pipe penetrates a load-bearing wooden member, this penetration must be made in a manner which does not seriously reduce the structural integrity of the member.

  At least 2 in. should always remain between the hole and both the top and bottom of the member, even in the case of band joists (which are supported underneath by the foundation wall). With members which are *not* supported underneath (floor joists and rafters), an additional requirement is that the hole not have a diameter greater than one-third the height of the member. With such unsupported members, the distance between the bottom of the hole and the bottom of the member should be greater than 2 in., if possible; the lower part of the member will be in tension, and thus will be more likely to fail than the upper part, which will be in compression.

  These guidelines mean that a 4 in. diameter pipe can be inserted through a 2- by 10-in. band joist (or even a 2- by 8-in. band joist, when encountered); at least 2 in. will remain at the top and bottom, assuming the penetration is near the center of the band joist. But a 4-in. pipe cannot be installed through a 2- by 10-in. floor joist, because 4 in. is greater than one-third of the 10-in. height of the joist. A 2-in. pipe *could* be inserted through the floor joist, since it would constitute less than one-third of the joist height.

  In addition, floor joists should not be notched at the bottom to accommodate the piping, since this may unacceptably reduce the strength of the joist. For example, if a 2-in. notch is cut into the bottom of a 2- by 10-in. floor joist, the entire joist will be to the strength of a 2- by 8-in. joist.

- When a hole is being cut through the basement band joist to route the piping outdoors near grade level, care must be taken to extend the hole neatly through the exterior finish (usually siding or brick veneer) on the outside of the band joist. Many mitigators make this hole just large enough to accommodate the pipe (typically about 4.5 in. outside diameter).

  When the exterior finish is brick veneer, a good approach would be to drill two pilot holes from inside the house out through the veneer, using a rotary drill with a small bit. This will show outdoors where the hole needs to be in order to properly line up with the band joist and piping indoors. The hole through the wall is then made from outdoors, to minimize damage to the bricks. First, a hammer and chisel are used to remove the necessary bricks and expose the sheathing; then, a hole saw can be used to make the hole through the sheathing and the band joist. Following installation of the piping, the original bricks can be cut as necessary and re-pointed.

  When the exterior finish is wood, vinyl, or aluminum siding, a similar procedure is used. Two pilot holes are drilled from indoors to identify the necessary location of the hole outdoors. The hole is then drilled with a hole saw from outdoors, to ensure that the hole is located in the center of a strip of siding, and to minimize visible damage to the siding; also, access is usually better from outdoors, permitting a neater job. The hole should probably be in the center of a strip of siding, if possible, for the purposes of convenience and neatness. To accomplish this, the hole may need to be shifted upward or downward somewhat compared to the position indicated by the pilot holes; in that case, it would no longer be exactly in the center of the band joist. (However, in no case should the hole be shifted to an extent that the space between the hole and either the top or bottom of the band joist is less than 2 in.)

- In cases where the exterior finish covering the band joist is particularly decorative or difficult to cut (e.g., a stone veneer), some mitigators elect to penetrate the basement foundation wall *below* the band joist (and below the point at which the finish ends on the exterior). This often means that the penetration is below grade level. Some mitigators consider penetration of the foundation wall below the band joist for aesthetic reasons even in cases where the exterior finish is regular siding or brick veneer. Although drilling through the block or concrete wall below grade is more complicated than sawing through the band joist, this approach avoids the complexity and aesthetic impact of trying to deal with and restore the exterior finish. When a hole is made through the foundation wall below grade, careful sealing is required in order to avoid water problems indoors.

- Where the piping through the basement band joist enters an adjoining slab-on-grade garage, the finish on the garage side of the band joist will usually be fire-rated sheetrock. In this case, the hole through the joist is made in the same manner as that described above, for the case of exterior siding.

- In mounting the piping horizontally through the hole through the band joist, many mitigators simply insert an integral section of the rigid piping through the hole, as suggested in Figure 1.

  One mitigator (KI92) has sometimes found it advisable to place a straight 4- by 4-in. flexible coupling (analogous to the 4- by 6-in. couplings used for mounting the fans) over the section of pipe where it penetrates the joist, to reduce the transmission of vibration to the band joist. (In this

US EPA ARCHIVE DOCUMENT

case, the hole through the band joist may have to be somewhat larger than 4.5 in.) Other mitigators report that transmission to vibration to the band joist is usually not a problem.

- Following mounting of the pipe through the hole, the penetration must be finished in an appropriate manner (e.g., the brick veneer must be re-pointed), and the gap between the pipe and the wall must be caulked well from outside (e.g., using non-flowable urethane caulk). This is mandatory to prevent rainwater that runs down the outside of the pipe from entering the house and damaging the band joist and other wooden members.

  If the gap is closed with mortar during the repair of brick veneer, rather than being closed with caulk, a non-shrink mortar should be used, so that it does not pull away from the pipe or foundation during curing.

- The frame wall between the living space and an adjoining slab-on-grade garage is considered a fire wall according to most building codes, and is covered with fire-rated sheetrock. Where SSD exhaust piping penetrates through a basement band joist (and through the sheetrock on the garage side of the joist) into the adjoining garage, this would be considered a breach of the fire wall. The concern is that, in the event of a fire in the garage, the PVC pipe would melt, leaving a 4-in. diameter opening through the wall which could nominally facilitate the spread of the fire into the living area.

  According to codes, an appropriate fire break needs to be installed in the piping at that penetration. Three types of fire breaks can be considered:

  - The fusible linkage type. Such a fire breaks consist of a short segment of metal pipe containing a spring-loaded metal damper held open by a fusible linkage. This segment of metal pipe would fit in the hole through the band joist, with PVC piping connecting on either side. In the event of a fire, the fusible linkage would melt, allowing the damper to close, closing the hole through the joist. When such a unit is installed, care must be taken to ensure that the damper is in fact properly open, since inadvertent closure of the damper would block the exhaust pipe, rendering the SSD system ineffective.

  - The intumescent wrap type. Strips of intumescent material are wrapped around the outside of the PVC pipe in the annular gap between the pipe and band joist. Or, if this gap is too small to accommodate the strips, the strips are placed at the seam between the pipe and the joist, enclosed within a metal collar that will force the material into the joist hole if the pipe melts. In the event of a fire, if the pipe melts, the intumescent material would expand into the hole, sealing the hole.

  - The framing-in approach. If the SSD stack within the garage is completely enclosed with framing and fire-rated sheetrock, including the point at which the pipe penetrates into the garage from the basement, this penetration would no longer be considered a breach in the fire wall.

- Where a pipe penetrates an overhead ceiling into the story above, care must be taken to locate the overhead hole to avoid obstructions on the floor above. Before any hole is made through a ceiling, it should be verified that there are not radiant heating coils in the ceiling, and that there is not electrical wiring, forced-air ducting, or other utilities above a suspended or sheetrock ceiling.

  If the ceiling hole is to be lined up with a hole in the slab directly below, special care will be needed in siting the two holes. The piping can be manipulated to fit through the two holes by slipping the base down to the bottom of the sub-slab pit, the sliding it upward through the ceiling hole. The use of thin-walled piping (which will flex slightly) may simplify mounting a length of piping through the two holes.

  - Where a ceiling penetration is being considered, it should be recognized that the ceiling will sometimes be considered a fire break, similar to the wall between the living area and the garage. The ceiling may be considered a fire break in multi-family housing, or in large buildings such as schools, though not usually in single-family houses. The ceiling may sometimes be considered a fire break in residential garages. Where the ceiling is considered a fire break, one of the three approaches indicated above for the garage fire wall should be implemented whenever that ceiling is penetrated by a PVC, PE, or ABS pipe.

4.6.4 Design and Installation of the Fan and Exhaust Piping—Interior Stacks

The preceding two sections addressed the routing and installation of the piping between the suction pipe and the fan. The next two sections address the mounting of the fan onto this piping network, and the design and installation of the piping leading from the fan to the ultimate discharge point.

As discussed in the introduction to Section 4.6, two basic exhaust configurations are considered for the purposes of this document: an interior stack, with the stack rising through the living area to a fan usually mounted in the attic; and an exterior (or garage) stack, with the fan and exhaust stack mounted outdoors (or in the garage). Section 4.6.4 addresses the first of these cases; exterior and garage stacks are addressed in Section 4.6.5.

Overall design considerations for all stack configurations. There are two general guidelines that are considered in the design of the exhaust system. Both of these guidelines result from the fact that there can be high radon concentrations in the exhaust (often more than 100 pCi/L and occasionally greater than 1,000 pCi/L).

1. The fan should be outside the livable envelope of the house.

US EPA ARCHIVE DOCUMENT

2. The exhaust should be released at a point where re-entrainment of the exhaust back into the house will be minimized, and where exposure of persons in the yard and in neighboring houses will be minimized.

Regarding the first guideline above, the fan should be outside the livable envelope due to a concern that leaks might develop over the years in the fan housing or in the pipe couplings or fittings on the pressure (discharge) side of the fan. Such leaks could result due to aging of the cement sealing the joints, or due to wear and tear on the piping over the years. If pressure-side leaks develop and if the pressure-side piping is inside the livable space, some of the potentially high-radon exhaust gas would be forced into the livable space. Such leaks could go undiscovered for years. While the amount of leakage could be small in many cases, there have been some cases where indoor pressure-side leaks have caused a distinct increase in indoor radon levels compared to post-mitigation levels with the leaks sealed.

No cases have been identified where indoor pressure-side leaks in an otherwise properly installed SSD system were sufficiently severe to cause indoor levels to increase above their *pre*-mitigation values. However, this nominally could happen if the leakage was significant enough.

There are no definitive data on the frequency or severity of such pressure-side leaks in the exhaust piping. Nor are there data on how alternative methods for careful sealing and supporting of the exhaust piping might reduce the risk of such leaks. In concept, it should be possible to design the exhaust piping to reduce this risk. However, in the absence of any data on the effectiveness and practical durability of such measures and in view of the problems that could potentially arise if the fan, in fact, wound up blowing sub-slab radon into the house, EPA's Interim Radon Mitigation Standards (EPA91b) conservatively specify that the fan should be outside the livable envelope.

To be outside the livable envelope, the fan should be in the attic (for the stack configurations discussed in this section), or outdoors or in an adjoining garage (for the stack configurations discussed in Section 4.6.5). House air flow patterns typically involve air movement from the living area up into the attic and out through vents and leakage points around the roof. Thus, any pressure-side leakage associated with attic-mounted fans would generally tend to be carried away from the living area by this natural flow. Attached garages are sufficiently well isolated from the living space, such that if there were any leakage from garage-mounted fans, only a small fraction of this leakage would circulate into the living area. Mounting the fan in the attic of the garage would further reduce such circulation, although such attic mounting probably will not usually be necessary.

EPA's interim mitigation standards specify that fans not be mounted in crawl spaces, since air flow patterns would tend to draw any pressure-side leakage from crawl-space-mounted fans up into the living area. Crawl-space-mounted fans would be of greatest concern in cases where the crawl space is not ventilated, and especially where the crawl space is effectively conditioned space (e.g., where the crawl space is completely open to an adjoining basement). Where the crawl space is not conditioned, and has foundation vents around the perimeter, any leakage would be diluted by outdoor air.

Regarding the second guideline listed above—minimizing exhaust re-entrainment and exposure to persons outdoors—EPA recommends that the exhaust be released vertically above the house (or garage) eave wherever possible. EPA's Interim Radon Mitigation Standards (EPA91b) currently specify that the discharge point be at least 10 ft: above grade level; away from any window, door, or other opening (such as an operable skylight); away from any private or public access; and away from any opening in an adjacent building. It is anticipated that EPA's final mitigation standards will explicitly require that the exhaust be discharged above the eave, preferably the highest eave. Design of the exhaust in this manner should help ensure that there is significant dilution of the exhaust by outdoor air before it can be re-entrained into the house, or before it can reach persons in the yard or in neighboring houses. The interior or exterior stack that is required to discharge the exhaust in this manner can add about $100 or more to the SSD installation cost (compared to the alternative of exhausting immediately beside the house at grade level) (He91b, He91c), and can sometimes create an aesthetic impact.

Very little data exist quantifying the effects of SSD exhaust re-entrainment, as a function of the key variables (including exhaust configuration, exhaust location, exhaust velocity/momentum, house characteristics, and weather conditions). Documented cases where exhaust re-entrainment in fact caused a significant deterioration in SSD performance all involve cases where: the exhaust was directed downward toward the soil immediately beside the house, as with a drier vent or with a 90° downward elbow on the fan exhaust (Mi87); or where the exhaust was directed straight upward immediately beside the house, or horizontally parallel to the house, especially when there were doors or windows nearby (Fi91). The very limited data which are available directly comparing above-eave and grade-level exhausts suggest that grade-level exhausts, directed horizontal to grade and aimed 90° away from the house, can result in re-entrainment no more severe than that experienced when the exhaust is discharged vertically above the eave (Fi91). Of course, the relative effects of the grade-level vs. above-eave exhaust might vary for differing weather conditions, exhaust velocities, etc.

Also, grade-level exhaust would not necessarily prevent exposure of persons in the yard immediately beside the exhaust. Limited data suggest that the radon in the exhaust will often be substantially diluted within a few feet of the discharge location.

In summary, exhaust vertically above the eave, or use of the 10-ft criteria currently specified in EPA's standards, represents a conservative effort to help minimize re-entrainment and exposure of persons outdoors. This conservative approach is currently preferred because data are not presently available to quantify those conditions under which grade-level exhaust will result in acceptably low re-entrainment and outdoor exposure. The effects of a given amount of re-entrainment will be less when the exhaust concentration is relatively low

US EPA ARCHIVE DOCUMENT

(e.g., below about 100 pCi/L), suggesting that measures to reduce re-entrainment might potentially be less crucial at such relatively low exhaust levels.

General considerations with interior stacks. One representative example of an interior stack is illustrated in Figure 20.

The decision to install an interior stack instead of an exterior or garage stack will depend upon the specific situation in a given house, and upon the preferences of the mitigator and homeowner. An interior stack will most likely be preferred when: a) there is a convenient utility chase leading from the basement to the attic through which an interior stack might be routed; b) in the absence of a chase, there is some other convenient route for directing an interior stack up through the floor(s) above the basement into the attic; c) there is an attic where the fan can be located; and/or d) there is no adjoining garage, or it is impractical to route the stack through the garage, so that a garage stack is not an option.

Where it is practical to route the exhaust piping up through the house, and where there is an attic in which the fan can be mounted, the interior stack/attic fan exhaust configuration offers several advantages.

- The aesthetic impact outside the house is essentially eliminated. The only part of the system visible outdoors will be a foot or two of the 4-in. diameter exhaust pipe, which will normally be on the rear slope of the roof (away from the street), and which will have the general appearance of a plumbing vent.

- The fan in the attic will be protected from the weather (particularly important for fans not rated for outdoor use) while being outside the livable envelope of the house. Likewise, all electrical wiring for the fan will be indoors, somewhat simplifying the wiring. At the same time, the fan and wiring will be out of sight from indoors as well as outdoors.

- The discharge will be well above the eave (and clearly more than 10 ft above grade), in accordance with EPA's interim standards, since the exhaust can penetrate through the roof at a point toward the peak. The discharge point will almost automatically be at least 10 ft away from windows, doors, private or public access routes, and adjacent buildings, in accordance with EPA's standards. And it should be relatively easy to ensure that the discharge is at least 10 ft away from other openings through the house shell, such as operable skylights, air intakes, and gable or soffit vents.

The primary disadvantage of the interior stack/attic fan configuration is that a route must be identified by which the piping can extend up inside the house. Where the house is a one-story slab on grade (so that the pipes can penetrate the ceiling directly into the attic), or where there is an accessible utility chase providing a direct path to the attic, routing the piping up inside the house will not be complicated. But where such a convenient path does not exist, the piping will have to be routed through, e.g., closets on the floor(s) above the slab. In such cases, if there is an adjoining slab-on-grade garage, a mitigator may wish to consider a possibly more convenient option of routing the piping into the adjoining garage, since garage stacks offer many of the same advantages as interior stacks.

A cost analysis (He91b, He91c) has shown that installing the stack up through closets in the house can sometimes be no more expensive than installing the stack exterior to the house or in an adjoining garage. The cost impact of the interior stack will depend upon the exact characteristics of the house, and the experience of the mitigator's crew with interior stacks.

Selecting the location of interior stacks. Interior stacks will be extended up through the house through a utility chase, if available, or through closets or other inconspicuous areas in the floors above the slab, as discussed in Section 4.6.2. Routing is easiest when there is an accessible chase, or when the house is a one-story slab-on-grade so that the pipes penetrating the living-area ceiling enter the attic directly.

Selecting the location of fans for interior stacks. With the interior stacks, the fan is usually mounted in the attic. As discussed under *Overall design considerations* above, fans mounted in attics are considered outside the livable envelope of the house, in accordance with EPA's interim standard. Any leakage of exhaust from the pressure side of the fan should flow outdoors in response to normal flow patterns up through the house, rather than being drawn down into the living area.

Within the attic, the fan is commonly mounted directly below the point at which the exhaust pipe will penetrate up through the roof, as shown in Figure 20. On this basis, the criteria for selecting the specific location for the fan within the attic are discussed in Section 4.6.2 (see *Routing considerations with attic piping runs).* These criteria include criteria associated with the fan (e.g., access to fan in attic) and criteria associated with the exhaust penetration (e.g., penetration on rear slope). Occasional situations may be encountered where it is preferred to mount the fan at some location other than that at which the exhaust pipe penetrates, e.g., to provide easier access to the fan for maintenance, or to simplify the wiring.

Considerations in designing and installing the piping network in the attic, leading to the fan, are discussed in Section 4.6.2 (see *Routing considerations with attic piping runs)* and Section 4.6.3. In most cases, some horizontal run will be needed to direct the piping to the point where the fan will be mounted and/or where the stack will penetrate the roof. A horizontal run will always be required when multiple risers penetrate into the attic and must be manifolded together. Even where only one riser enters the attic, there may still have to be a horizontal run in the attic if the vertical piping leading up to the attic cannot be placed directly below the roof penetration.

Where there is not an attic or where any attic is inaccessible (e.g., where there is a cathedral ceiling or a flat roof), the fan for any interior stack would have to be installed on the roof. Roof mounting of the fan would eliminate some of the advantages of this exhaust configuration. The aesthetic impact outdoors would be increased, since the fan would now be visible. In addition, when the roof is flat, penetration of the

US EPA ARCHIVE DOCUMENT

stack through the roof can create water leakage problems over time unless the penetration is sealed very carefully. Where there is no attic, the interior stack may sometimes still be a viable option, but an exterior stack could be preferable.

Criteria for selecting fans for interior stacks. The selection of the appropriate fan to achieve adequate SSD performance has been discussed in Section 4.4. In the figures and discussion in this section, the focus is on the in-line tubular fans covered in Section 4.4.1. If another type of fan were used, the details regarding the mounting and support of the fan would have to be adjusted accordingly, for that other type of fan.

With interior stacks having the fan mounted in the attic, it is not necessary for the fan to be UL-rated for exterior use.

If the fan were mounted on the roof, the fan would no longer be protected, and it would have to be UL-rated for outdoor use. Or, a protective housing would have to be installed around the fan. Where a roof-mounted fan is required, a fan model specifically designed for wall or roof mounting could be considered, although the in-line models discussed in Sections 4.4.1 and 4.4.2 could still be practical.

Mounting fans in attics. A detailed diagram illustrating a representative technique for mounting a fan in the attic is presented in Figure 23.

The fan should always be mounted vertically. Vertical mounting of the fan is crucial, so that condensed moisture (and any precipitation that enters the stack) will drain down through the fan and down to the sub-slab region via the system piping. If the fan were mounted horizontally, the condensed moisture could accumulate in the lower portion of the fan housing. Such accumulated moisture would interfere with the rotation of the fan blades, significantly reducing fan performance and shortening fan lifetime.

If only one horizontal pipe is running over to the fan location, as in Figure 20, a 90° elbow is installed on the end of the horizontal pipe. The fan is then mounted on a vertical segment of piping extending up from this elbow. If horizontal pipes are running to the fan from two directions, as in Figure 23, a tee fitting would be used. If there is no horizontal run, the fan would be mounted directly on the vertical riser penetrating the ceiling into the attic.

The fan must be mounted on the vertical pipe with an air-tight coupling. Commonly, flexible PVC couplings, such as those marketed by Fernco, Indiana Seal, and Uniseal. These flexible couplings should help reduce the vibration transmitted to the piping by the fan, compared to what would be expected if rigid PVC couplings were used. But even with these flexible couplings, some vibration can still be transmitted (Bro92).

Figure 23 (and the other figures in this document) illustrate an in-line tubular fan having 6-in. diameter couplings, such as the 90-watt "Category 4" fans listed previously in Table 1, being connected to 4-in. diameter piping. Thus, a 4-in.-to-6-in. flexible coupling is shown both below the fan, and also above, where the 6-in. fan outlet is reduced back to 4-in. exhaust piping that penetrates the roof. If one of the smaller fans listed in Table 1 were being used, the couplings would be a straight 4-in. couplings or a 4- to 5-in. couplings. If one of the radial blowers discussed in Section 4.4.2 were being used along with 3-in. suction piping, 3- to 3-in. couplings would be used.

The flexible couplings are clamped tightly to the fan and to the pipe using standard circular hose clamps, to avoid leakage. Leakage at the outlet coupling of the fan would force some high-radon exhaust gas out beside the house (or in the garage attic). Leakage at the inlet coupling would draw outdoor air into the system, increasing system flow and potentially reducing the suction that could be maintained in the SSD pipes. The hose clamps must be tightened sufficiently to prevent leakage; however, severe *over*-tightening could cause distortion of the pipe or fan, potentially increasing leakage (Bro92).

If there is uncertainty regarding the air-tightness of the fit, tests could be conducted with a chemical smoke stick to detect leaks. If leakage is occurring, the coupling should be adjusted; if adjustment does not eliminate the leakage, the seams between the flexible coupling and the piping or fan could be caulked. Any such caulking should be done with an easily removable caulk, such as silicone caulk, rather than polyurethane, so that the fan can be easily removed later for maintenance. Caulking should not normally be necessary.

Subsequent removal of the fan for maintenance or replacement would involve loosening the flexible couplings and sliding the fan up or down as necessary to remove the unit. The short length of stack above the fan in Figure 23 may be withdrawn down through the flashing as part of this procedure. If the stack is thus removed and re-installed as part of the fan maintenance, care should be taken to ensure that any seal between the stack and the top of the flashing remains tight when the stack is re-installed.

Many of the plastic-bodied in-line duct fans on the market today have integral, essentially air-tight housings, so that there will not be leakage into or out of the fan housing. However, some fan models (especially those with metal bodies) have seams in the housings which will permit exhaust to leak out (or attic air to leak in) if not caulked properly. Any such leaks in the fan housing must be detected and effectively caulked.

The mounting configuration illustrated in Figure 23 represents the in-line tubular fans discussed in Section 4.4.1. It also represents the in-line radial blowers discussed in Section 4.4.2. Other types of fans may have to be mounted in different ways. For example, if they were to be mounted in an attic, the DynaVac HS series of high-suction/low-flow fans listed in Table 3 (Section 4.4.3) would have to be bolted into vertical wooden members nailed into, or part of, the roof truss. The Pelican high-suction blower can be suspended from a horizontal brace in the truss, using a mounting intended to reduce the transmission of vibration to the brace.

Support for fans in attics. The fan and piping must be adequately supported.

US EPA ARCHIVE DOCUMENT

US EPA ARCHIVE DOCUMENT

Notes:

1. Figure depicts fan hard-wired into existing 110-volt house circuit. Other options are illustrated in a later figure. Wire should be stapled against wooden member every 18 in.

2. Figure depicts end of each horizontal run being supported near fan by strapping attached to brace in roof truss. Appropriate method of support in a given house will be determined by exact configuration of piping and wooden members. Some alternative methods of support are suggested in a previous and a later figure.

3. When strapping does not support fan weight directly, some step may be necessary to prevent fan assembly from slipping down on vertical pipe below.

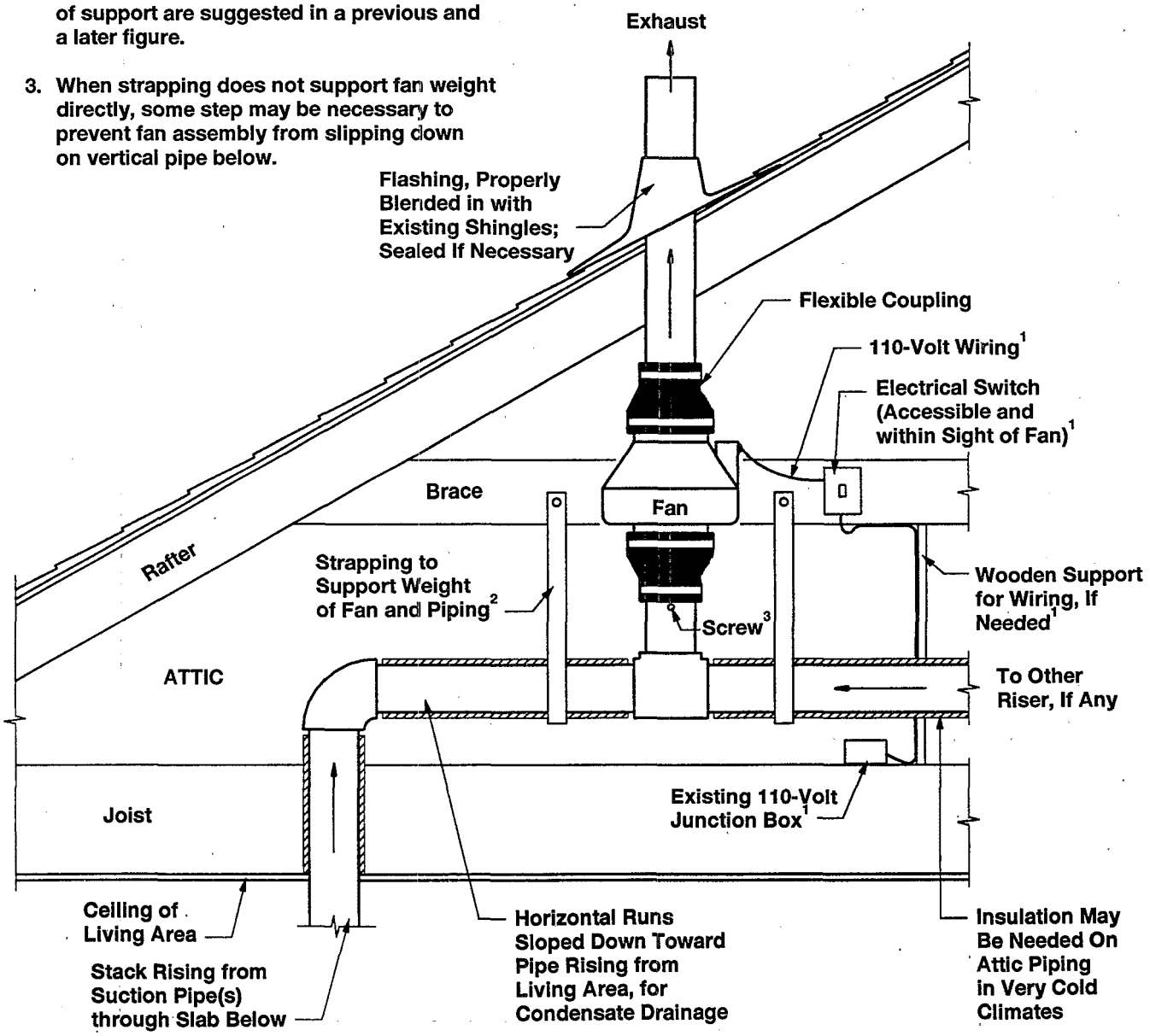

Figure 23. A representative method for mounting a fan in the attic above an interior stack.

When there is a horizontal piping run in the attic supporting a fan at one end, the weight of the fan could cause the piping run to sag at that end. This would create a low point where condensed moisture could accumulate. One way of avoiding such sagging is to support each horizontal piping run at a point near the fan, using hangers or strapping attaching the pipe to members in the roof truss. Figures 20 and 23 show strapping attaching the horizontal piping to a horizontal roof brace. Each horizontal run is supported in Figure 23. Other approaches using hangers and strapping can also be considered, adapting some of the alternatives shown in Figure 16 for supporting basement runs from overhead floor joists; the difference would be that, in this case, the supporting members would be components of the roof truss instead of floor joists.

If the horizontal run were parallel to the attic floor joists, it could be down between the joists, suspended by a strapping loop analogous to the top diagram in Figure 16b.

Some investigators consider supporting the horizontal piping directly on the attic floor joists, or by placing some type of solid support between the tee fitting in Figure 23 and the underlying joist, so that the piping and fan weight is borne by the joist. If this approach were used, it would be important that sufficient padding be placed between the piping and the joists, to prevent fan vibration from being transmitted to the joists.

Support could also be provided directly at the fan, supplementing or possibly replacing any support at the horizontal piping. The fan could be supported by strapping looped tightly around the bottom flexible coupling, and attached to a roof brace or rafter. Two of the three diagrams in Figure 24 are examples this approach; although this figure is for the case where there is no horizontal run in the attic, those two approaches for supporting the fan would also be applicable when a horizontal run is present. The fan could also be supported directly using a fan mounting bracket, attaching the fan to wooden members in the roof truss. Use of a bracket could result in transmission of vibration to the truss.

However the support is provided, it is important that support of each horizontal run be provided near the fan. And (or), the fan itself should be supported directly. It may also be advisable to support each horizontal run in the attic at the end remote from the fan (although such remote support is not shown in Figure 20), depending upon how the interior stack is supported on the stories below.

In some cases, there may be *no* horizontal piping run in the attic -- i.e., the riser penetrating the ceiling into the attic extends straight up through the roof. Figure 24 illustrates three possible alternatives for providing support in the attic for straight vertical runs. Two of the options show strapping looped around the flexible coupling beneath the fan and attached to either a brace or a rafter in the truss. The third option involves strapping looped around the pipe at the level of the attic floor joists, and attached to the two adjacent joists; this option is analogous to that illustrated in Figure 17A, for a vertical pipe in a basement extending up between the overhead floor joists. For this third option, a screw would have to attach the strapping to the pipe, to prevent the pipe from slipping down through the strapping (Br92). Schedule 40 piping would probably be required in this case, to prevent the screw from causing a split in the plastic.

A fan mounting bracket, attaching the fan to the roof truss, would be another alternative for use with straight vertical runs.

As discussed in Section 4.6.3, any piping network should be supported at at least one other location, in addition to near the fan. If there is a horizontal run on a story below (e.g., in a basement), support should be provided on each end of that basement run, near the suction pipe on one end and near the interior stack on the other, as in Figure 20. When the interior stack extends straight up through the house from the suction point in the slab, it is increasingly important that the system also be supported on the stories below, so that the entire weight of the stack is not suspended from the connection in the attic. The most positive support for such an interior stack would be at the slab, using one of the approaches in Figure 15 or equivalent. Another option would be to support the stack at a floor penetration, e.g., using one of the approaches in Figure 17.

The weight of the fan is supported directly only in the first two cases in Figure 24, where the strapping is looped around the lower coupling on the fan; it would also be directly supported if a fan mounting bracket were used. But in the third case in Figure 24, and in Figure 23, the support is being applied to the piping leading to the fan; these configurations are relying on the piping to support the weight of the fan. Where the fan is thus not supported directly, there may be a concern that, over time, the weight of the fan may cause it and the lower flexible coupling to slide down over the vertical pipe below, especially in hot climates. Such slippage could result in the vertical pipe under the fan being shoved upward into the fan. This could interfere with the rotation of the rotor, reducing system performance and possibly damaging the fan. At least one mitigator reports having encountered this problem, perhaps because the lower coupling was not sufficiently tightened (Kl92); others have not experienced it (Mes92).

To address this possible problem, one mitigator (Kl92) suggests installing a screw into the pipe immediately below the lower coupling, to prevent this coupling from sliding down the pipe in cases where the fan is not directly supported. Such a screw under the coupling is shown in Figure 23 and the third option in Figure 24. Another option would be to make the vertical pipe beneath the fan short enough so that the lower coupling could be supported by the lip of the tee fitting (or 90° elbow) beneath.

Wiring fans in attics. The fan must be connected to a power source in a manner consistent with the National Electrical Code and any additional local regulations.

A common approach is to hard-wire the fan into the house circuitry in the manner indicated in Figure 23. Since the in-line duct fans commonly used with SSD systems draw less than 1 ampere of electrical current, they can usually be wired into any convenient existing 110-volt circuit (e.g., a nearby electrical junction box, as shown in the figure). But where the addition of the mitigation fan causes the total connected load

US EPA ARCHIVE DOCUMENT

US EPA ARCHIVE DOCUMENT

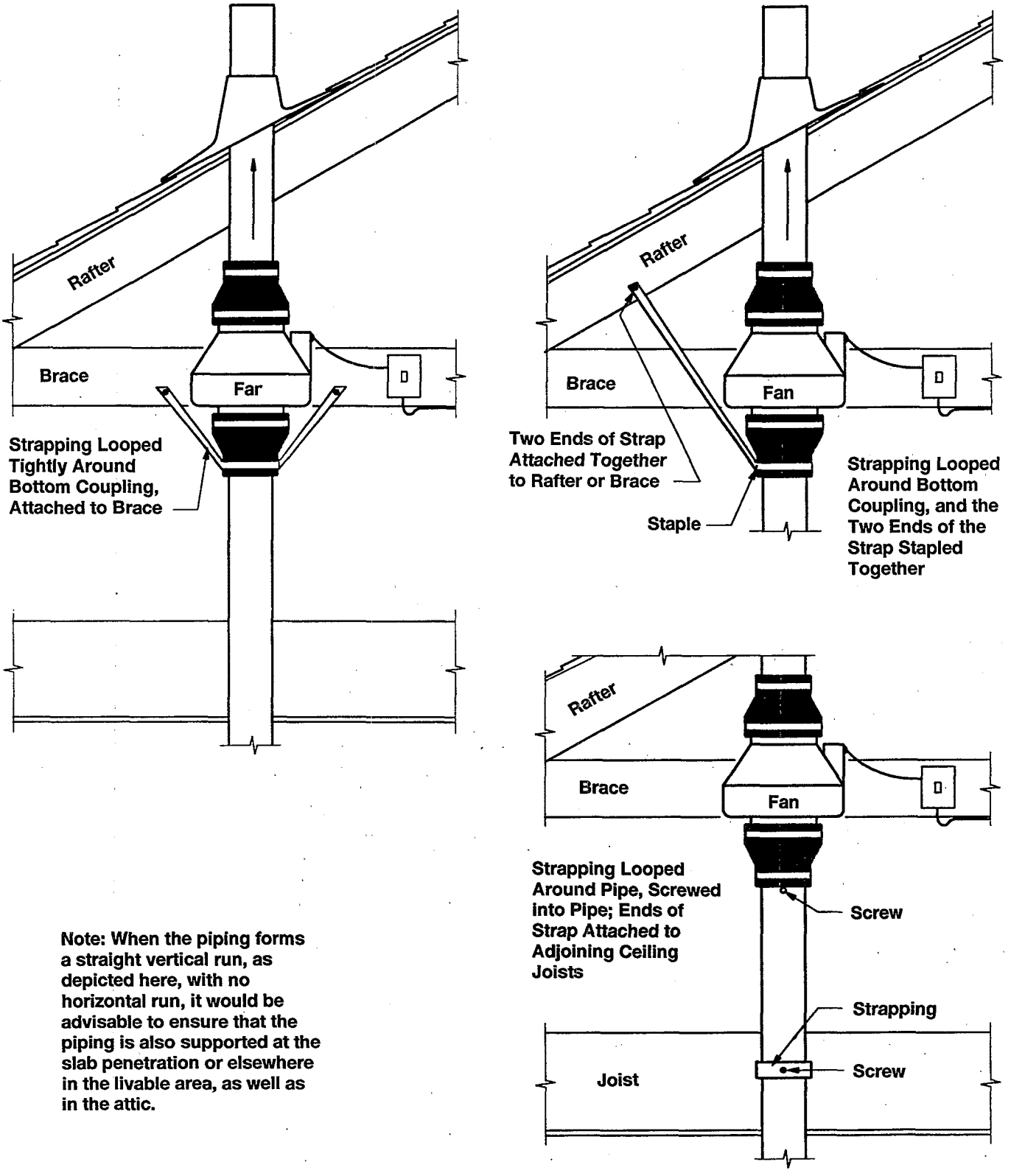

Figure 24. Some options for supporting a fan and exhaust piping in an attic in cases where there is no horizontal piping run in the attic.

on the circuit to exceed 80% of that circuit's rated capacity, a separate, dedicated circuit should be installed to power to fan.

The National Electrical Code requires that a switch (to turn the fan power on and off) be placed in the circuit within sight of the fan. Ideally, this switch would be relatively close to the attic access, to facilitate access by the occupant.

The wiring connects to the fan inside the electrical box mounted on the side of the fan. The wiring leads from the fan, through the on/off switch, to the junction box. Where codes require that the wiring be stapled every 18 in., a vertical wooden support may have to be installed in some cases such as that illustrated in Figure 23, where the wiring drops from the truss brace to a pre-existing junction box mounted on an attic floor joist. No suspended length of wire should be installed within arm's length of an attic access door, to avoid the risk that someone may inadvertently grab the wire when entering or exiting the attic (Bro92).

Because all of the wiring is in the attic, the wiring and switch can be rated for interior use.

In some locations, codes may permit the fan to simply be plugged in to a nearby electrical outlet, as shown in Figure 25A. In this case, the plug may be construed as the switch within sight of the fan. The electrical cord will usually have to be no longer than 6 ft for this approach to be acceptable. In some areas, it may never be acceptable to simply plug in a continuously operating appliance such as a mitigation fan, regardless of cord length.

If the fan cord is plugged into an existing electrical outlet in the attic, it must be ensured that the power to that outlet will not be interrupted. In particular, the power to outlets incorporated into attic light fixtures may go off when the attic light is switched off.

When fans are installed by mitigators, codes generally require that the installation of 110-volt wiring be conducted by a licensed electrician, if this wiring consists of anything more than simply plugging a 6-ft cord into a nearby outlet. To simplify the installation in cases where the distance is longer than 6 ft, one vendor is marketing the system illustrated in Figure 25B, where the wiring is only 24 volts. Wiring of that low voltage can generally be installed without a licensed electrician. A transformer in the wiring where it is plugged into the house electrical outlet steps the system voltage down from 110 to 24 volts. In this product, the transformer box also includes an ammeter which measures the current being drawn the fan, thus serving as a failure indicator. The wiring laid between the transformer and the fan is thus 24 volts. A transformer within the tubular fan steps the voltage back up to 110 volts, for normal fan operation. Because the wiring leading to the fan is only 24 volts, the vendor indicates that a switch is no longer needed within sight of the fan; the "switch" is now the 110-volt plug within sight of the transformer/ammeter (in the basement in Figure 25B).

Exhaust piping from fans mounted in attic. An exhaust pipe on the pressure side of the fan must be installed up through the roof. Assuming that the fan is mounted directly beneath the point at which the roof will be penetrated, this exhaust piping will consist of a length of straight pipe several feet long, as shown in Figure 23.

The hole through the roof can be cut with a hole saw or a reciprocating saw. Because the water-tightness of the roof will have to be restored with flashing and sealant, it is desirable that this hole be reasonably small and neat. The hole should be only slightly larger than the pipe, to facilitate installation and to allow for any expansion or contraction, and should be cut as close to vertical as possible.

After the length of exhaust pipe is installed on the fan outlet, extending up through the roof, steps must be taken to prevent leaks around the penetration. Flashing must be installed which fits snugly around the pipe, and which must be carefully fitted under the existing shingles above and beside the penetration. Some shingles will have to be loosened or removed and replaced to install the flashing, a step which must be carried out carefully in order to avoid tearing the shingles.

While caulking around the flashing is nominally not required if the flashing is properly installed, it is advisable to caulk around the perimeter of the flashing where it contacts the adjacent shingles after the flashing has been nailed in place. Caulking the perimeter will help ensure against leakage during heavy rains (Bro92). Some mitigators also recommend caulking the heads of the nails holding the flashing in place, and placing a bead of caulk at the seam between the flashing and the exhaust pipe, at the top of the flashing (Mes92).

Where the penetration has been made through a flat roof, the seam between the pipe and the roof must be thoroughly sealed with liberal quantities of roofing tar.

The exhaust pipe should extend above the roof by a foot or two. The primary concern in selecting stack height is to ensure that the discharge point will not become blocked by drifts of snow or leaves. Taller stacks might be expected to improve exhaust dispersion, helping the exhaust jet to penetrate the boundary layer of air flowing over the roofline. However, there are no data demonstrating a need to make the stack taller than 1 to 2 ft. It is likely that any reduction in re-entrainment resulting from making the stack taller than 1 to 2 ft would be offset by the increased aesthetic impact the taller stack.

Where the stack above the fan is only a few feet long, it is usually not necessary to provide separate support for the stack. But where this stack is much more than about 3 or 4 ft long, one mitigator recommends supporting it separately, usually with strapping connected to the members in the roof truss (Kl92).

Caps on the exhaust stack. Some mitigators install a vent cap on top of the stack, primarily to prevent precipitation from entering the stack. The concern is that excessive amounts of rainwater being channeled to the sub-slab region via the suction pipe might reduce sub-slab communication near the suction pipe, thus reducing system performance. However, there is some question whether rainwater entry into the pipe will indeed be excessive in many climates. For example, a 1-in. rainfall would nominally introduce 0.05 gal of water into

US EPA ARCHIVE DOCUMENT

US EPA ARCHIVE DOCUMENT

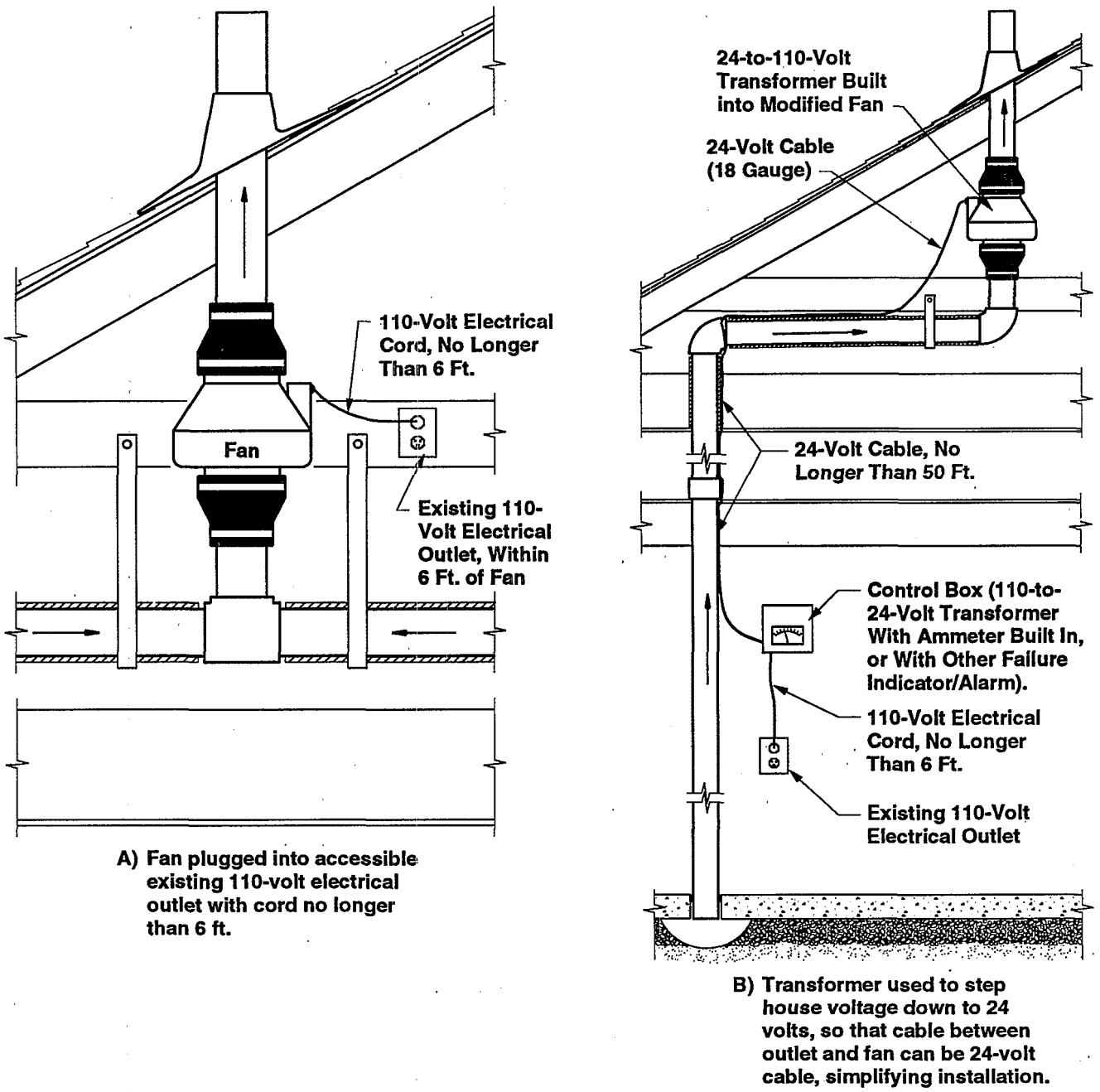

Figure 25. Some alternative approaches that can sometimes be considered for wiring SSD fans mounted in attics.

a 4-in. diameter stack, an amount which will usually be small compared to the condensate expected from the soil gas. And, at least where aggregate is present beneath the slab, it may be expected that any water will often drain away and not interfere with suction field extension through the aggregate layer.

A vent cap would also prevent leaves, other debris, and animals from entering and potentially plugging the stack. The momentum of the air leaving the stack should generally prevent light debris such as leaves from entering the stack, without a cap. While many mitigators report occasional problems due to birds, bats, squirrels, bees, or other animals entering the stack when there is no cap, these experiences appear to be infrequent (Bro92, Kl92, Mes92).

A number of mitigators feel that vent caps are unnecessary (An92, Bro92, Mes92, Kl92). Caps can even be undesirable, because many cap designs will increase back-pressure in the system, contribute to ice buildup at the discharge point during cold weather, and potentially reduce dispersion of the exhaust. For these reasons, vent caps have not been included in any of the preceding figures.

Two possible designs for vent caps are shown in Figure 26. The design in Figure 26A, which focuses on preventing the entry of rainwater into the piping, is not commonly used in residential radon mitigation installations, but is widely used in various other commercial applications. This design would not create any back-pressure in the piping; however, neither would it help prevent the entry of debris into the stack, if that is a serious concern.

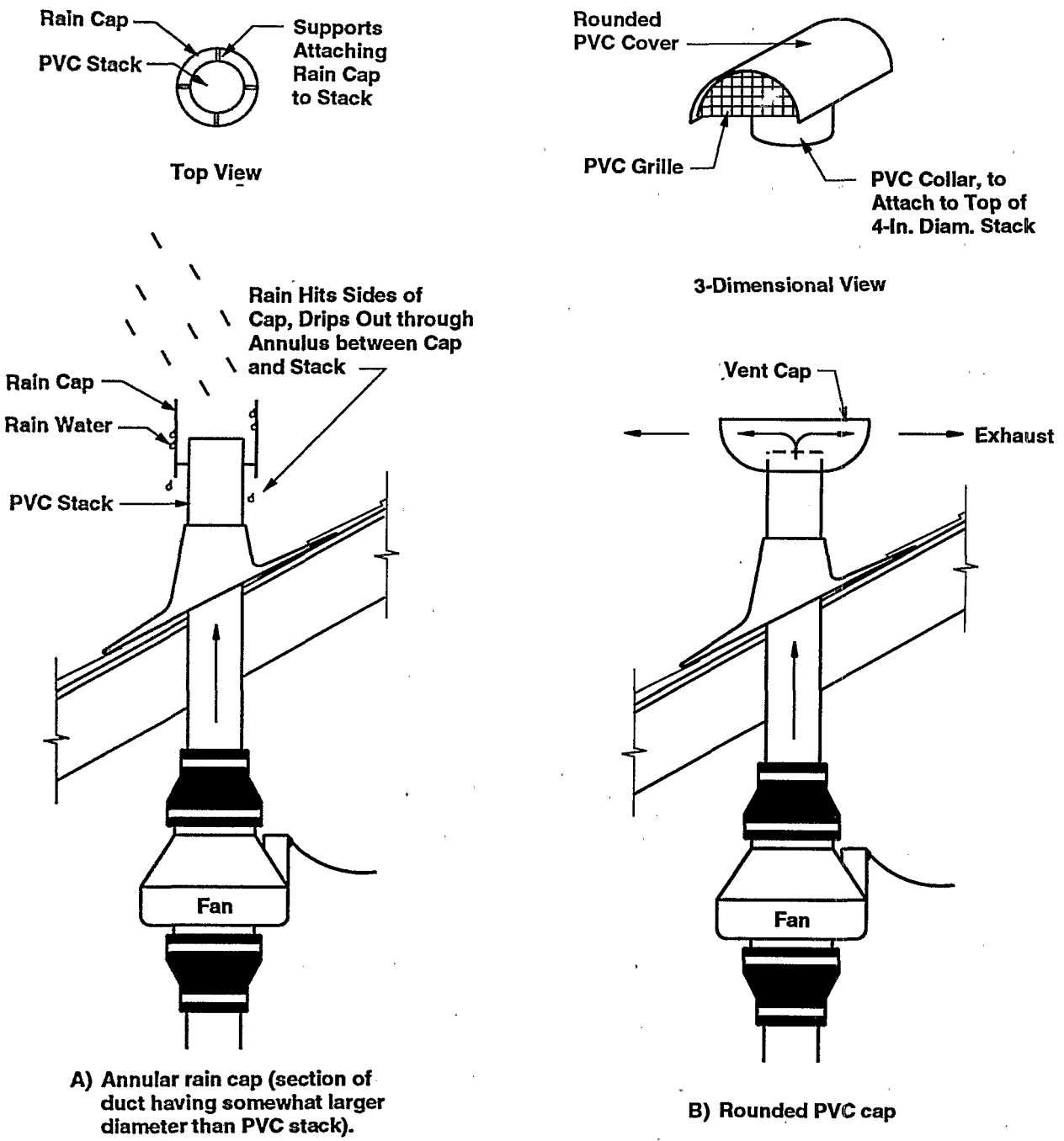

Figure 26. Two possible configurations for vent caps on SSD stacks.

US EPA ARCHIVE DOCUMENT

Figure 26B shows a cap design more widely marketed for radon mitigation applications. The cap itself resembles a section of PVC piping sliced in half down its axis, and fitted at its ends with PVC grilles. This cap is held in place on top of the stack by a circular PVC collar at its base, which slips down over the exhaust pipe like a fitting and can be cemented in place. This cap should effectively prevent the entry of both precipitation and debris but would be expected to create some back pressure and potentially reduce dispersion.

There is also an aluminum cap on the market. The cap has a perforated cylindrical wall, somewhat larger in diameter than the 4-in. exhaust pipe, with a solid plate on top. A circular aluminum collar at its base fits tightly inside the PVC exhaust pipe.

Another design sometimes utilized involves placing one or two 90° elbows on top of the stack, creating an inverted "L" or "U" so that the discharge is directed horizontally or down toward the roof. The inverted U, in particular, should be effective at preventing entry of precipitation and debris, but again, would create back pressure and potentially reduce dispersion.

One mitigator (KI92) reports placing hardware cloth screen (1/4-in. mesh) over the stack opening, primarily to keep animals out. The screen is bent to fit inside the pipe, where it will initially remain in place by pressure fit; the screen is then secured in place by sheet metal screws. This screen should not significantly influence system back pressure or reduce dispersion.

One of the potential problems with some cap designs is increased back pressure on the fan. These caps serve as flow obstructions on the pressure side of the fan, potentially reducing the suction that the system can maintain beneath the slab. In particular, the cap in Figure 26B, the aluminum cap, and the inverted L and U, might be expected to offer this disadvantage. However, this back pressure may in fact not be a serious problem except in cases where flows are high, if the fan is properly selected. One group of investigators (CI91) has found that the back pressure created by the cap in Figure 26B will be about 0.002 to 0.02 in. WG at flows of 20 to 70 cfm. This pressure loss will usually be insignificant compared to the suctions typically maintained in the suction piping by the in-line tubular fans (typically several tenths of an inch of water, up to more than 1.5 in. WG). An inverted U, with two elbows, would have a higher pressure loss, 0.01 to 0.2 in. WG over the typical SSD flow range (20 to 100 cfm). At the higher flows, this loss might occasionally be important in marginal systems.

Another potential disadvantage of the cap in Figure 26B, the aluminum cap, and the inverted L is that they deflect the upward-flowing stream, causing it to discharge horizontally instead of vertically upward, and reducing its momentum. The inverted U would cause the exhaust to discharge vertically downward, and would further reduce exhaust momentum. By changing the direction and reducing the momentum of the exhaust, these caps will reduce the potential for the exhaust gas "jet" to penetrate the boundary layer created by air movement over the roofline of the house, thus hindering dispersion of the exhaust outside of the building wake. Intuitively, the exhaust will probably still be diluted sufficiently well that re-entrainment should not be a serious problem; however, there are no data or calculations to confirm this intuition.

Another concern regarding any rain cap is that it may contribute to the accumulation of ice at the discharge during cold weather, restricting flow and creating significant back pressure. By providing more cold surface area and reducing the exhaust momentum, a cap could add to the tendency of water droplets in the exhaust to collect and freeze.

In summary, there are no data confirming that rain caps are really necessary; from the discussion above, it would seem that they should not be necessary in many cases. On the other hand, neither are there data confirming that rain caps will do any harm; perhaps the greatest risk would be one of increased ice accumulation during cold weather. Under these conditions, it is left to the discretion of the mitigator regarding whether or not to install a cap. At least one fan manufacturer reportedly now requires a rain cap on the stack, as part of the fan warranty, to keep precipitation out of the fan.

Mufflers on exhaust stack. Sometimes sufficient noise is emitted at the point where the exhaust is discharged, that some homeowners find the sound objectionable. This noise could result from: a) fan noise which is transmitted inside the stack; and b) turbulence in the exhausted gas as it escapes. Fan noise inside the pipe is generally higher for the higher-powered fans, such as the high-suction/low-flow units in Section 4.4.3. The noise from gas turbulence would be expected to increase as exhaust velocity increases, and to be greater when there is an obstruction (such as a fitting or vent cap) at or near the exhaust point.

Mufflers are marketed which can be installed in SSD exhaust stacks downstream of the fan to reduce this noise. Mufflers are commonly 6- to 12-in. long sections of pipe lined on the inside with a sound-deadening material (such as acoustic foam) which "captures" some of the sound waves being transmitted inside the piping due to the fan. Unless the muffler increases the diameter of the exhaust stack at its discharge point, thus reducing exhaust velocity, it is not clear whether it will significantly reduce the noise associated with the turbulence in the escaping gas. It is suspected that much of the noise associated with the exhaust may often be fan noise.

In the case of interior stacks with attic fans, the muffler, if needed, would logically be installed in the attic above the fan. Alternatively, it could be installed outdoors after the piping has penetrated the roof.

Mufflers are generally required on the exhausts from the high-suction/low-flow fans. They are not often used with the in-line tubular fans in Section 4.4.1. However, even with the tubular fans, situations have occasionally been encountered where the sound from the exhaust point -- although subtle -- is objectionable to sensitive occupants. Mitigators will have to decide on the value of a muffler on a case-by-case basis.

US EPA ARCHIVE DOCUMENT

Since mufflers are not commonly used with the in-line tubular fans, they have not been included in the figures in this document.

Considerations when fan must be on the roof. All of the preceding discussion has assumed that the fan will be inside an attic. Where an accessible attic exists, that will generally be the preferred location for the fan. Where there is no attic, or where the attic is inaccessible, the interior stack exhaust configuration would necessitate that the fan be on the roof. This situation would take away some of the advantages of the interior stack.

If the fan must be on the roof, this will impact the design and installation approach described above in several ways.

1. If there is no attic, any horizontal piping runs will have to be inside the house or on the roof, which can be more complicated and/or less aesthetic than locating them in the attic.

2. If the roof is flat or is over a cathedral ceiling, making the hole in the roof for the pipe penetration may be more complicated. With flat roofs, careful sealing around the penetration will be necessary, since flat roofs create an increased threat of water leakage. With cathedral ceilings, the slope may be steeper; moreover, since the roof penetration may be in finished living area, the conditions under which the hole is drilled can be more exacting.

3. The fan will have to be rated for exterior use. A fan designed for roof or side-wall mounting may be considered, rather than an in-line tubular fan.

4. The wiring that is outdoors will have to be sunlight-resistant, and otherwise rated for exterior use. Likewise, the switchbox will have to be wet-proof, rated for exterior use, assuming that it is outdoors (e.g., on the roof) in order to be within sight of the fan. The procedures for wiring exterior fans are discussed in Section 4.6.5.

4.6.5 Design and Installation of the Fan and Exhaust Piping—Exterior and Garage Stacks

General considerations with exterior and garage stacks. One representative example of an exterior fan and stack is illustrated in Figure 21. If a slab-on-grade garage adjoined the basement at the point where the piping exits the basement, the fan and stack would be inside the garage, with the stack penetrating the garage roof (assuming that there is no living area above the garage).

The decision to install an exterior or garage stack instead of an interior stack will depend upon the specific situation in a given house, and upon the preferences of the mitigator and homeowner. An exterior stack will most likely be preferred when: a) there is not a convenient utility chase leading from the basement to the attic through which an interior stack might be routed; b) there is not an acceptable route for directing an interior stack up through the floor(s) above the basement into the attic; c) there is no attic; d) there is no adjoining garage, or it is impractical to route the stack through the garage for one reason or another; or e) the suction pipes penetrate the foundation wall horizontally from outdoors. A garage stack will often be preferred when: a) an adjoining garage exists; b) the suction pipes penetrate the slab indoors (rather than horizontally from outdoors); and c) the location of the suction pipes, the presence of living area on the overhead floors, or other factors make it more convenient to route the piping through the wall adjoining the garage than to install and exterior or interior stack.

When the fan and the stack are outdoors, this exhaust configuration creates a greater aesthetic impact outdoors, compared to the interior stack/attic fan configuration. However, exterior stacks can reduce the aesthetic impact indoors, especially in complex or highly finished houses, and may sometimes be preferred by the homeowner and mitigator. The exterior stack will often be less expensive than, or comparable in price to, an interior stack, unless the house is particularly amenable to an interior stack (one-story slabs on grade and houses with accessible utility chases) (He91b, He91c). The cost increase associated with an interior stack appears to be the least when the mitigator's crew is experienced with interior stacks. Another potential concern with exterior stacks is an increased risk restriction or pluggage due to the freezing of condensate during cold weather; such freezing problems have been reported in cold climates.

Where there is an adjoining garage, locating the fan and stack in the garage can offer the advantages of both the interior stack and the exterior stack. Like the interior stack, the garage stack will essentially eliminate the aesthetic impact outdoors; it will keep the fan and wiring in a protected location; and it will usually avoid the risk of stack freezing during cold weather. Like the exterior stack, the garage stack will avoid aesthetic impacts inside the living area. A garage stack may be roughly $100 more expensive than an exterior stack because of the firebreak that is often needed where the pipe penetrates from the basement into the garage and because of the costs associated with penetrating the garage roof (a cost which the exterior stack avoids unless it penetrates the roof overhang, also discussed later) (He91b, He91c). A garage stack may be either more or less expensive than an interior stack, depending upon the particular house characteristics and the experience of the mitigator with interior stacks.

Selecting the location of exterior or garage stacks. The criteria for deciding where the exterior or garage stack will be located have been discussed in Section 4.6.2 (see *Selection of where the piping exits the basement).*

An additional consideration in locating exterior stacks is that the risk of the stack becoming plugged with frozen condensate during cold weather can be reduced if the stack can be located on the south side of the house, where it will be exposed to more sunlight (Kl92).

Selecting the location of exterior or garage fans. Where there is an exterior stack, EPA's standard specifies that the fan must be outdoors (EPA91b), as emphasized previously. With garage stacks, the fan must be in the garage. Location of the

fans outside the livable area is intended to reduce the risk of increases in radon levels if leaks develop over the years in the fan housing or piping on the pressure side of the fan.

Exterior fans are commonly mounted near grade level immediately outside the foundation wall, at the base of the exhaust stack, as shown in Figures 1 and 21. This location will reduce the visual impact of the fan, compared to the alternative of mounting it higher in the stack, and will improve the ability to potentially conceal the fan behind shrubbery. Location near grade also facilitates access to the fan for maintenance, and may simplify the electrical wiring. Also, in view of the fact that aluminum downspouting is sometimes used for exterior stacks for aesthetic reasons, attempting to mount the fan on top of the artificial downspout would represent an added complication.

One potential disadvantage of having the fan at the base of exterior stacks is that, in cold climates, ice that has formed inside the necessarily uninsulated stack during the winter may become dislodged and fall down into the fan during thaws, preventing proper system operation and potentially damaging the fan. One mitigator who has occasionally observed this problem reports that although the fallen ice did sometimes prevent rotation of the fan rotor and hence interfere with system performance, it did not seem to damage the fans (Kl92).

With garage stacks, one potential disadvantage of having the fan near the slab is that any pressure-side leaks would release high-radon exhaust near the living area. However, unless the garage is conditioned space, the garage is usually sufficiently well isolated from the living area (and the amount of exhaust released will usually be sufficiently small) such that this concern should not necessitate that the fan be moved up to the garage attic, if placement in the attic is otherwise not desired.

If the garage does have an accessible floored attic, location of the fan in the garage attic could be considered. If the fan is located in a garage attic, selection of the exact location within the attic would be made as discussed in Section 4.6.2 (see *Routing considerations with attic piping runs)* and Section 4.6.4.

Criteria for selecting exterior and garage fans. The selection of the appropriate fan to achieve adequate SSD performance has been discussed in Section 4.4. In the figures and discussion in this section, the focus is on the in-line tubular fans covered in Section 4.4.1. If another type of fan were used, the details regarding the mounting and support of the fan would have to be adjusted accordingly, for that other type of fan.

With exterior fans and stacks, the fan should be UL-rated for exterior use. This will mean that the wiring box and connection on the side of the fan will have to be properly weather-proofed. With fans mounted in garages, rating for exterior use is unnecessary.

Mounting exterior or garage fans. In accordance with the discussion in Sections 4.6.2 and 4.6.3, the system piping will have been installed through the basement band joist and exterior finish to the outdoors (for exterior stacks), or through the foundation wall below the exterior finish. With garage stacks, the piping will have been installed through the basement band joist and the fire-rated sheetrock in the garage; also, the fan wiring could be somewhat different in garages because it will be in an enclosed space, as discussed later.

A detailed diagram illustrating a representative technique for mounting an exterior fan is presented in Figure 27. This figure is for the case where the suction pipes are installed inside a basement, and is a detailed enlargement of a portion the system shown in Figure 21. If the suction pipes penetrated horizontally from outdoors, of course, the portion of the figure below the fan would look as shown in Figure 2. If the fan and stack were in a garage, the pipe from the basement would be penetrating fire-rated sheetrock on the exterior face of the wall, rather than brick veneer as shown.

As discussed earlier in Section 4.6.4 (see *Mounting fans in attics),* the fans should be mounted vertically, so that condensate and rainwater will drain out of the fan. As shown in Figure 27, a 90° elbow is usually installed on the end of the horizontal pipe penetrating through the house shell. The fan is then mounted on a vertical segment of piping extending up from this elbow.

For convenience in supporting the fan, some mitigators have suggested mounting exterior fans horizontally, directly on the pipe penetrating the house wall. By this approach, a drain hole perhaps 1/4 to 1/2 in. diameter would be drilled at the low point in the fan housing, on the underside of the fan, to permit water to drain out. Based upon simple orifice calculations, a hole of this size should result in a maximum leakage into the system of only a few cfm of air, and thus should not create excessive suction loss with the in-line tubular fans. However, much experience suggests that, even though the soil gas passing through the fan will be at a temperature well above freezing even during the winter, the drain hole can still ice shut in outdoor fans during extended cold weather. If the drain hole becomes plugged with ice, condensate will accumulate in the fan housing. In addition, horizontal mounting will void the warranty of some fans. Thus, vertical mounting is recommended.

The fan is commonly mounted on the vertical pipe using flexible PVC couplings, to help reduce the vibration transmitted to the piping by the fan. See the discussion under *Mounting fans in attics* in Section 4.6.4. The flexible couplings are clamped tightly to the fan and to the pipe using circular hose clamps, to avoid leakage. As in other figures in this document, Figure 27 illustrates a 4-in.-to-6-in. coupling, connecting a tubular fan with 6-in. couplings onto 4-in. piping. The coupling size would vary if the fan or pipe size varied.

Figure 27 shows a short segment of 4-in. piping below the lower flexible coupling (between the coupling and the 90° elbow), and another such segment above the upper coupling. These segments should be sufficiently long so that, when the couplings are loosened, the couplings can be slid up or down as necessary to remove the fan for repair or replacement. With interior stacks, the length of the pipe stub under the attic fan will sometimes be of less concern since, at least with the

US EPA ARCHIVE DOCUMENT

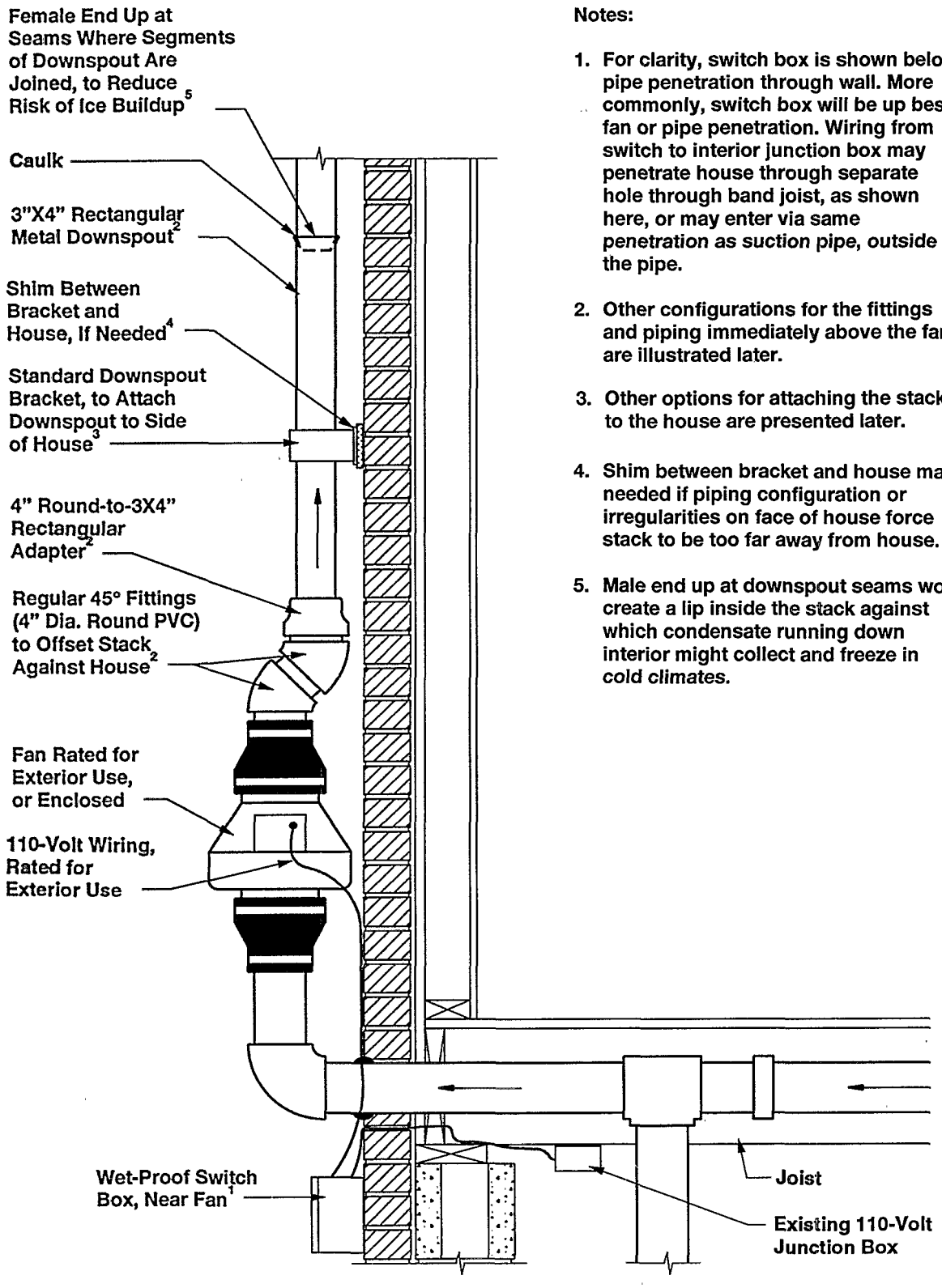

Notes:

1. For clarity, switch box is shown below pipe penetration through wall. More commonly, switch box will be up beside fan or pipe penetration. Wiring from switch to interior junction box may penetrate house through separate hole through band joist, as shown here, or may enter via same penetration as suction pipe, outside the pipe.
2. Other configurations for the fittings and piping immediately above the fan are illustrated later.
3. Other options for attaching the stack to the house are presented later.
4. Shim between bracket and house may be needed if piping configuration or irregularities on face of house force stack to be too far away from house.
5. Male end up at downspout seams would create a lip inside the stack against which condensate running down interior might collect and freeze in cold climates.

Figure 27. A representative method for mounting an exterior fan at the base of an exterior stack.

configuration shown in Figure 23, the short length of stack above the fan could be removed with the fan if necessary. However, with exterior stacks, which will be firmly attached to the side of the house, it is important that the fan be able to be removed without movement in the piping either above or below.

If the particular fan model being used does not have an essentially air-tight housing, any leaks in the fan housing must be detected and effectively caulked.

As one variation of the mounting configuration in Figure 27, an ABS plastic enclosure is being marketed which can be mounted around exterior fans to improve appearance and provide some protection. This housing screws against the side of the house. It encloses the fan and its couplings, the elbow and the wall penetration below the fan, and the fittings above the fan (which serve to offset the stack against the side of the house). The commercially available enclosure comes with a "transition box" which offsets the stack against the house, taking the place of the fittings above the fan; otherwise, the mounting of the fan inside the enclosure is essentially identical to that illustrated in the figure.

The mounting configuration illustrated in Figure 27 represents the in-line tubular fans and radial blowers discussed in Sections 4.4.1 and 4.4.2. The DynaVac HS series of high-suction/low-flow fans listed in Table 3 (Section 4.4.3) bolt directly onto the side of the house when used with exterior stacks. The Pelican high-suction fan is not designed for use with exterior stacks.

Support for exterior and garage fans. The weight of the fan must be adequately supported. The weight of the stack above the fan must also be supported separately; support for the stack is discussed later (see *Exhaust piping from exterior fans* below).

The horizontal pipe extending through the wall below the fan will be supported at its penetration through the band joist, and by hangers or strapping inside the basement. This pipe should adequately support the weight of an in-line fan, if the pipe extends out from the house only as far as is required to provide clearance between the fan housing and the house.

Many mitigators find that no further support for exterior or garage fans is needed in many cases. However, for additional support, some mitigators have sometimes attached the fan housing directly to the side of the house using a fan mounting bracket. If this is done, the bracket must be attached tightly to the house, to reduce the transmission of vibration; if there is wood siding, the bracket should be screwed into studs in the wall. As another way of providing additional support, some type of support could be placed between the ground and the elbow beneath the fan, so that the fan weight is borne by the ground. Some mitigators have sometimes accomplished this by installing a T-fitting under the fan, instead of the 90° elbow in Figure 27, with one leg directed upward and one downward; the fan is then mounted on the upward leg, while a length of rigid pipe is installed into the downward leg and is embedded in the ground under the fan. On occasion, as another alternative for providing additional support, the fan has been attached to a post embedded in ground beside the fan.

Since these additional support features for the fan are not usually necessary, they are not shown in Figure 27.

Wiring exterior and garage fans. Considerations involved in the electrical wiring for fans have been discussed in Section 4.6.4 (see *Wiring fans in attics).*

When the fan is inside a garage, the wiring considerations will be very similar to those for attic fans. The fan can be hard-wired into a convenient existing house circuit with an on/off switch in sight of the fan; since the wiring is inside the garage, the wiring and switch can be rated for interior use. Where codes permit, the fan may be plugged into a nearby electrical outlet using a cord no longer than 6 ft.

Where the fan is outdoors, more care in the wiring is required. See Figure 27. To be within sight of the fan, the on/off switch will often have to be mounted outdoors on the side of the house near the fan, as in the figure. In some cases, the switch is located indoors, in sight of the fan. Commonly, an outdoor switchbox will be mounted at an accessible location close to the electrical box on the fan, so that a short length of outdoor electrical conduit can connect the fan to the exterior switchbox with a minimum run of the conduit along the side of the house. Runs of conduit along the face of the house should be stapled every 18 in.

Wiring from an outdoor switchbox penetrates the house shell and is hard-wired into the house circuitry (e.g., at an existing junction box in the basement, as in Figure 27). In the figure, the wiring penetrates the wall through a separate hole drilled especially for the wiring. Alternatively, if there is a gap around the 4-in. hole that has been drilled for the exhaust pipe, the wire might enter the house through this gap between the outside of the pipe and the wall. Such a gap may exist, for example, when the hole has been made through a block foundation wall with a rotary hammer drill, and is thus slightly irregular. The National Electrical Code prohibits running electrical wiring inside air ducts; thus, it would be against code to route the wiring into the house inside the SSD piping, drilling a small hole in the pipe just outside and just inside the house to accommodate the wire.

Any wiring or conduit used outdoors must be rated for exterior use. Likewise, if the switchbox is mounted outdoors, it must be weather-proof and rated for exterior use.

Exhaust piping from exterior fans—selection of stack material. When an exterior fan is mounted near grade level as in Figures 21 and 27, an exhaust stack must extend vertically above the fan, if the exhaust is to be at least 10 ft above grade in accordance with EPA's interim standards (EPA91b). This exterior stack generally extends to or above the eaves. There are numerous options in designing exterior stacks.

The exterior stack can be PVC, PE, or ABS piping of round cross-section, like the remainder of the piping in the system. The diameter of the stack will commonly be the same as that in the rest of the system. The back-pressure created by this

US EPA ARCHIVE DOCUMENT

stack will have the same impact on sub-slab suctions as would an equivalent length of piping on the suction side of the fan. Use of round piping for the stack has the greatest aesthetic impact among the alternatives, since it will clearly look like a stack. Also, UV-resistant Schedule 40 pipe must be used for exterior stacks, to reduce embrittlement over time. Painting the stack would help address both of these concerns.

Instead of round pipe, some mitigators commonly used aluminum rain gutter downspouting for the stack, so that the stack resembles a downspout. Where this is done, it is advisable to use downspouting of 3- by 4-in. cross-section, rather than the 2- by 3-in. downspouts common in residential applications. The larger downspouting has a cross-sectional area similar to that of 4-in. diameter piping, thus reducing system back-pressure and flow noise compared to the smaller downspout. Aluminum downspout stacks can be noisier than PVC stacks due to vibration, unless care is taken during installation, as discussed later (Bro92, Kl92). Aluminum downspout stacks may also be more prone to condensate freezing during cold weather (Kl92); use of the downspouting with the larger cross section should reduce the risk of complete pluggage with ice.

As another alternative, PVC piping of rectangular cross-section is being marketed. This rectangular piping is intended to resemble a downspout once painted to match the house.

Exhaust piping from exterior fans—offset against house. Whatever material is used for the stack, the piping immediately above the fan is almost always offset toward the house, so that the stack will be against the house. This improves the appearance and facilitates supporting the stack. Even with this offset, the stack may have to stand at least a fraction of an inch away from the house, due to the dimensions of the fittings and obstructions on the face of the house. For example, if the fan is mounted beside a brick veneer but the story above has wood siding (which will protrude out from the veneer), the stack will have to stand off from the veneer by a fraction of an inch in order to clear the siding above.

There is a wide variety of methods for achieving this offset, a few of which are discussed here.

In Figure 27, a pair of regular 45° fittings of 4-in. diameter PVC (or PE or ABS) are installed above the fan, with short lengths of straight 4-in. PVC piping in between as necessary to mount the fittings. Since the figure assumes that the stack is 3- by 4-in. aluminum downspouting, a PVC adapter fitting is shown above the upper 45° elbow, to serve as the transition between the round piping and the downspout. The PVC fittings and piping would be tightly cemented together. The bottom of the downspout would be fit inside the 3- by 4-in. opening in the PVC adapter, being bent or crimped as necessary to accomplish a good fit; the seam between the PVC and the aluminum would then be effectively caulked.

Some of the other alternatives for achieving the offset are illustrated in Figure 28. The first option is almost identical to that in Figure 27 (a pair of 45° fittings and an adapter with a downspout stack). The difference is that, in this case, the 45° elbows are "street" fittings rather than regular fittings. With street fittings, one end of the fitting is narrowed so that its outside diameter becomes the same diameter as the outside diameter of the straight lengths of piping; normally, the fittings are about 1/2 in. wider. The use of street fittings enables the two 45° fittings to be cemented together and to the adapter above without the need to insert a short length of straight pipe (perhaps 4 in. long) in between.

The second option in Figure 28 differs from that in Figure 27 in that two regular 90° fittings are used above the fan, instead of 45° fittings. The use of 90° fittings requires that the fan be slightly farther away from the house.

The third option differs from the second in that the adapter to convert from the round fittings to the 3- by 4-in. downspouting is omitted. The rectangular aluminum downspout is crimped as necessary to fit directly into the round fitting, and the residual gap is carefully sealed with caulk. When the bottom of the 3- by 4-in. downspouting is properly bent, it reportedly fits reasonably well into a round 4.5-in. i.d. fitting.

The fourth option in Figure 28 differs from the others in that is shows the use of 4-in. round PVC piping as the stack, rather than 3- by 4-in. downspouting.

Exhaust piping from exterior fans—connection of stack segments. Where PVC (or PE or ABS) piping of round or rectangular cross-section is used as the exterior stack, the segments of piping are connected with straight fittings/couplings. The piping and fittings are cemented tightly together, as is done with piping runs inside the house. Assuming that the stack is above the fan, and hence is operating under pressure, cementing the joints is necessary to prevent the escape of high-radon exhaust gas immediately beside the house through leaks between piping segments. It also improves the physical integrity of the stack.

When aluminum downspout is used as the stack, some mitigators always or sometimes seal the seams between segments using urethane caulk (Bro92). Some mitigators rarely caulk the seams, relying on a tight pressure fit between the segments (Kl92). Others sometimes caulk seams, when the seams are near openings in the house shell (Mes92). Downspout stacks may be inherently somewhat leakier than PVC stacks, because the joints between segments cannot be cemented and can be difficult to effectively and permanently seal (Bro92).

In cold climates, downspout stacks may have an increased risk that condensate will freeze inside the stack. To reduce the risk of freezing, one mitigator recommends that segments of downspouting be joined in a manner such that the wide end of lower segment joins with the narrow end of the upper segment, rather than vice-versa. See Figure 27. If this were reversed, so that the narrow end of the lower segment were pointing upward inside the upper segment, a lip would be created; condensate running down inside the stack could collect on this lip, possibly increasing the risk of freezing.

Exhaust piping from exterior fans—support of stack against house. The exterior stack must be effectively supported against the side of the house, to prevent it from dropping and to maintain its integrity.

US EPA ARCHIVE DOCUMENT

US EPA ARCHIVE DOCUMENT

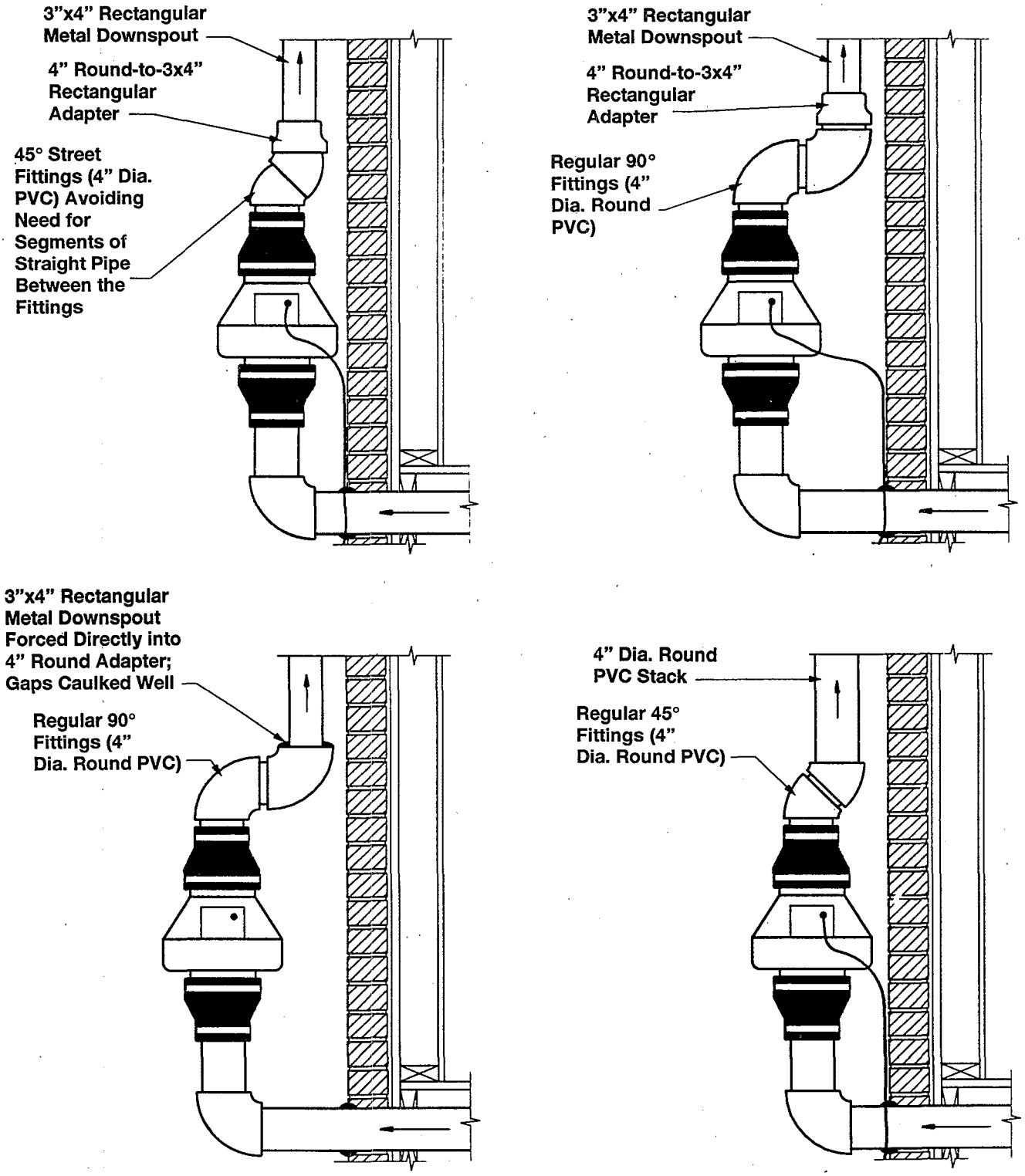

Figure 28. Some of the alternative methods for offsetting exterior stacks against the house.

A wide variety of approaches have been used for supporting the stack, depending upon the whether the stack is PVC or aluminum downspouting. Some of the methods that different mitigators have reported using are shown in Figure 29.

Whatever support method is used, several such supports are likely to be needed, at intervals along the stack run. At least one support will be needed for each stack segment; sometimes, a support may be warranted at each end of a segment. A support will definitely be required toward the upper end of the top segment, close to the point where the stack extends outward around the roof overhang; routing the stack around the overhang is discussed later. Some mitigators recommend that the lowest support be some distance above the fan, in an effort to reduce the amount of fan vibration transmitted to the siding (KI92).

Minimizing the transmission of vibration noise to the house is a possible concern any time a rigid support is used (i.e., in all of the cases in Figure 29 except for the strapping in Figure 29D). It is also of concern when the stack is in direct contact against the house; this may be particularly common when the stack is downspouting. Transmission of vibration noise seems to be worse with downspout stacks than with PVC stacks (Bro92). In addition to placing the lowest support a sufficient distance above the fan, other approaches that have sometimes been used in an effort to reduce vibration noise include:

a) Placing a cushioning material between the stack and the rigid support (Figures 29A, 29B, and 29F). If there is a shim between the stack and the house to cause the stack to stand off from the house as discussed below and if the stack is drawn tightly against the shim, a cushioning material might be placed between the stack and the shim.

b) Placing a cushioning material between the support and the house (Figures 29C and 29E), or between the shim and the house. This may be somewhat less effective than a) above, since, once vibration has been transmitted to the support, it may still get through to the siding via the screws which will necessarily penetrate any cushion.

c) Using strapping, as in Figure 29D. Strapping will be less likely to transmit vibration, in cases where it can be used without drawing the stack tightly against the house.

d) Avoiding direct contact between the stack and the house, except via cushioned supports and shims. However, direct contact can improve the integrity and appearance of the stack, and is especially common for downspout stacks. Supports such as those in Figures 29A and 29D usually result in direct contact, with the stack drawn tightly against the house.

e) Supporting the stack tightly against a surface that is less likely to vibrate, such as brick veneer rather than wood siding, where this is an option.

In cases where the side of the house is basically flat, as with uninterrupted brick veneer, the stack may often be installed flush against the house, depending upon the type of support used. Placing the stack flush against the house will be most common with downspout stacks, one possible reason why downspout stacks sometimes seem to be noisier than PVC stacks. In these cases, Figure 21 and the other figures may be somewhat misleading, in that they suggest that the downspout stack is a couple of inches away from the veneer.

In other cases, there may be obstructions along the wall which will require that the stack stand off from the wall by a fraction of an inch or more. One example would be a two-story house with veneer on the lower story and wood siding on the upper; the siding would extend a fraction of an inch out from the veneer. In such cases, the stack may have to stand off from the veneer in order to clear the siding. Some stack supports, such as those in Figures 29C and 29E, inherently create a stand-off. Other supports, such as those in Figures 29A, 29D, and 29F, tend to draw the stack tightly against the house. With such supports, a shim of appropriate thickness could be used to create the necessary stand-off. Shims would commonly be pieces of treated wood which are inserted between the house and the support. Shims are shown in Figures 29B and 29F.

It will commonly be appropriate for a shim to extend laterally all the way behind the stack, from the right-hand connection between a given support and the house, to the left-hand connection. In such cases, the support will usually draw the stack tightly against the shim. Figures 29B and 29F do not show the shim extending in this manner. Rather, they reflect a case where there are two small shims for each support, one located on each side of the stack where the bracket or clamp attaches to the house.

The support methods shown in Figure 29 reflect some of the more common alternatives. Figure 29A is a standard metal bracket that fits around downspouts, of the type commonly used to attach the downspouting from rain gutters. Figure 29B is the same type of bracket, but with a shim to serve as a stand-off. Figure 29C is a standard downspout bracket of a different design, which fits entirely behind the downspout rather than wrapping around it. Figure 29D shows a continuous loop of plastic strapping, wrapped around the stack and drawing it tightly against the house. Figure 29E represents a two-piece metal pipe clamp; the two sections bolt together on the outside of the stack, and are held by a metal channel which screws into the side of the house. Figure 29F shows standard galvanized metal strapping which extends tightly around the stack and screws into the wall on each side; in this example, a shim is shown to provide a stand-off.

There are a variety of other possible approaches. With downspout stacks which are flush against the house, one mitigator sometimes screws the downspout directly into the house, inserting a screw through the rear of the downspout from inside the downspout, near the joint between segments (Bro92). Another option would be to screw a galvanized metal strap vertically up the side of the house, directly behind the stack; the stack could then be attached to this strap, e.g., using stainless steel hose clamps tightened around the stack and the metal strap (Bro92).

Where the support is being attached to siding, galvanized screws suitable for outdoor use would be an appropriate choice. Where the support is being attached to veneer, a

US EPA ARCHIVE DOCUMENT

US EPA ARCHIVE DOCUMENT

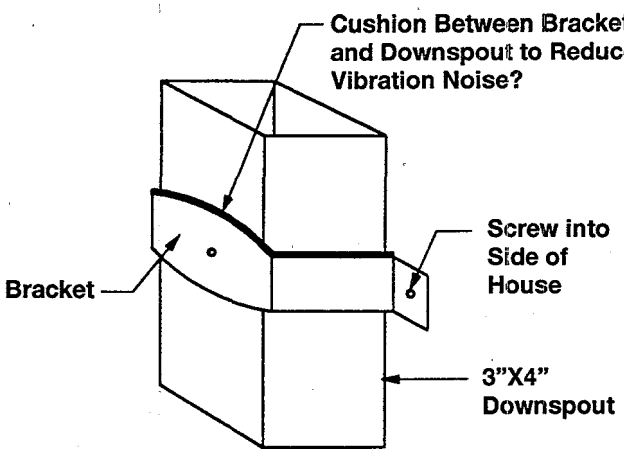

A) Standard sheet metal bracket around 3"X4" metal downspout stack.

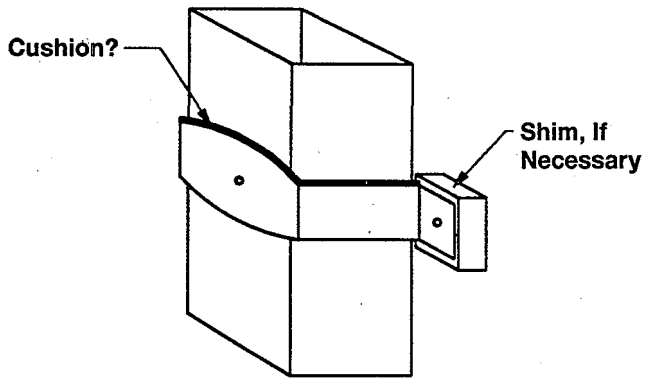

B) Standard sheet metal bracket around 3"X4" downspout with shim between bracket and house to permit stack to stand off from house as necessary to clear irregularities on face of house.

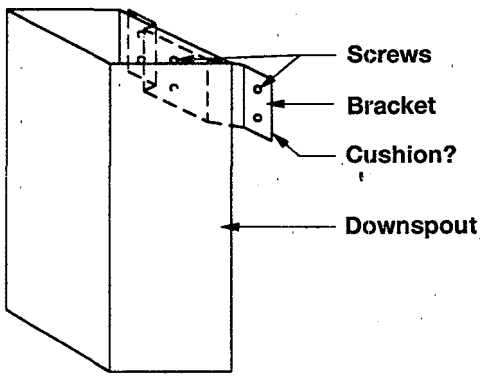

C) Standard sheet metal bracket on back of 3"X4" metal downspout stack.

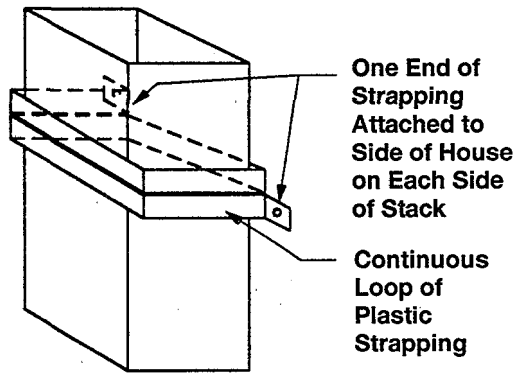

D) Plastic strapping

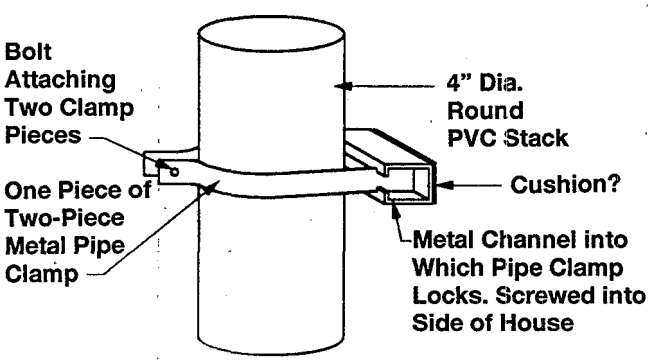

E) Two-piece metal clamp around circular stack.

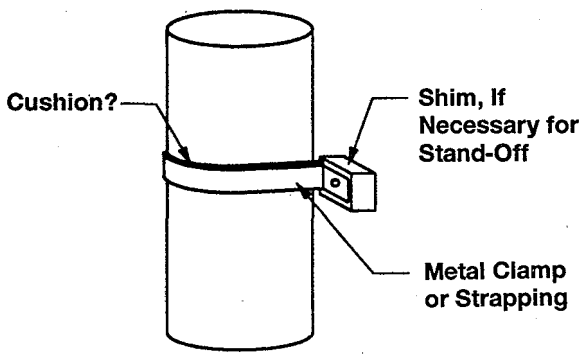

F) Metal clamp or strapping around circular stack.

Figure 29. Some alternative methods for supporting an exterior stack against the side of a house.

masonry screw or nail could be used. Or a lag bolt could be used, with a hole being drilled in the brick to accommodate the lag, and the screw then screwed into the lag.

Exhaust piping from exterior fans—routing stack around or through roof overhang. Where an exterior stack reaches the roof overhang, there are two options in configuring the stack: to angle the stack outward around the overhang and rain gutter, extending the stack above the eave outside the gutter; or to penetrate straight up through the overhang. These options are illustrated in Figure 30, for the case where the stack is 4-in. diameter PVC piping.

Routing the stack out and around the overhang is the easiest option for exterior stacks. It will always be the choice when downspouting is used for the stack. Penetration of the overhang is the more expensive option, but may offer better appearance when the stack is PVC piping. Penetration of the overhang may not be advisable in climates where snowfall is heavy; ice accumulation behind the stack during the winter may have sufficient weight to damage the overhang.

Figure 30A shows one approach for supporting the stack when it is routed around the overhang. Some of the alternatives are shown in Figure 31.

Whatever option is used for routing the stack around the overhang, the best discharge approach will be to discharge vertically upward above the eave, as illustrated in all of the options in Figures 30A and 31. Discharging upward will probably best accomplish the goal of reducing re-entrainment back into the house. Some mitigators delete the last vertical length of stack shown in the figures, discharging horizontally (or nearly horizontally) away from the house near soffit level. This horizontal soffit-level exhaust would meet EPA's interim guideline requiring discharge at least 10 ft above grade (EPA91b); however, it is unclear that it could be as effective as the vertical-upward exhaust in helping avoid entrainment of the exhaust gas in any air circulation zone beside the house beneath the eave. While the horizontal soffit-level exhaust directed away from the house can meet EPA's standard, it would seem that -- since the cost and aesthetic impact of installing an exterior stack have been incurred -- it would be advisable to install the last vertical segment of stack that will help ensure that the desired benefits of that exterior stack are in fact realized.

Each of the options in Figures 30A and 31 show the vertical exhaust at a point several inches above the bottom roof shingle (and 6 to 12 in. above the lip of the rain gutter). This height is necessary to ensure that water overflowing the rain gutter does not enter the top of the stack, and that snow, leaves, or other debris accumulating on the roof or in the gutter do not enter or block the stack opening.

When the stack is of PVC, one approach (illustrated in Figure 30A) is to bring the stack up just below the soffit, then to direct it horizontally outward with a 90° elbow. This horizontal run would have to be at a sufficient distance below the soffit to clear the fascia, which usually extends lower than does the rain gutter. Once this horizontal run has extended beyond the rain gutter, a second 90° elbow directs the stack

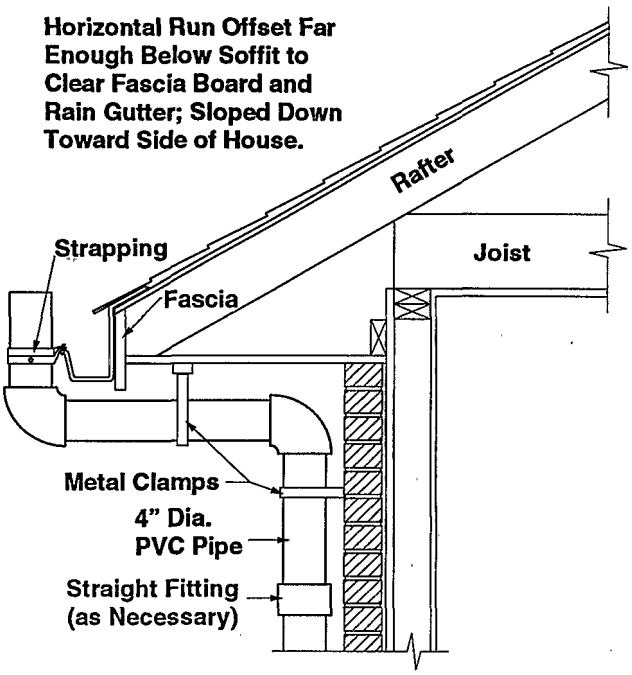

A) PVC stack extends horizontally under soffit and around rain gutter

Note: Penetration of the overhang may not be advisable in regions having heavy snowfall, where ice accumulation on the roof behind the stack might have sufficient weight to damage overhang.

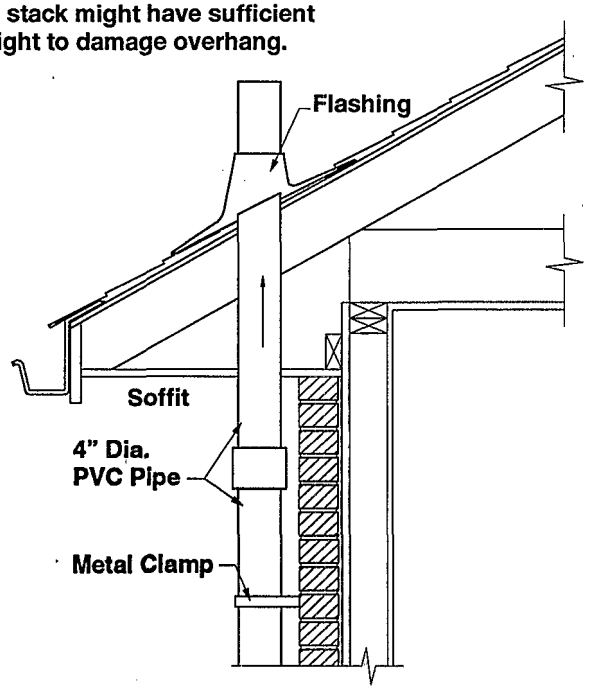

B) PVC stack penetrates soffit and roof

Figure 30. Options when an exterior stack reaches the roof overhang.

US EPA ARCHIVE DOCUMENT

US EPA ARCHIVE DOCUMENT

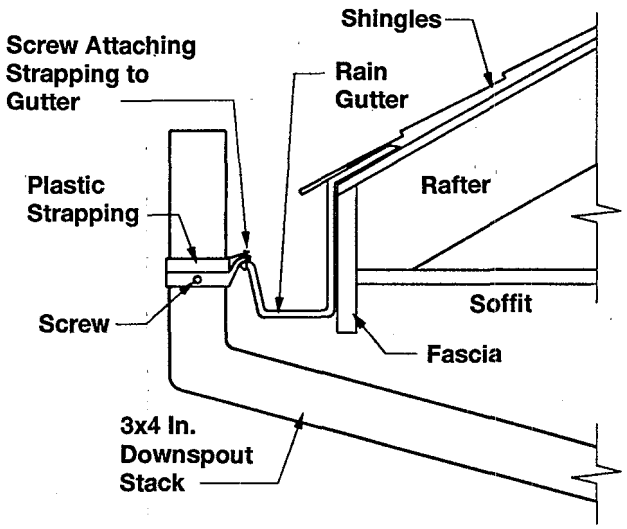

A) Plastic strapping looped through slit in outer lip of rain gutter, or screwed onto lip of gutter.

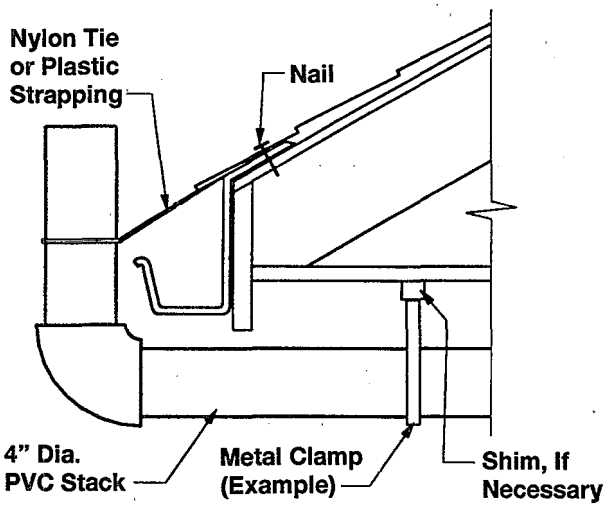

B) Nylon tie or plastic strapping nailed to roof under shingle.

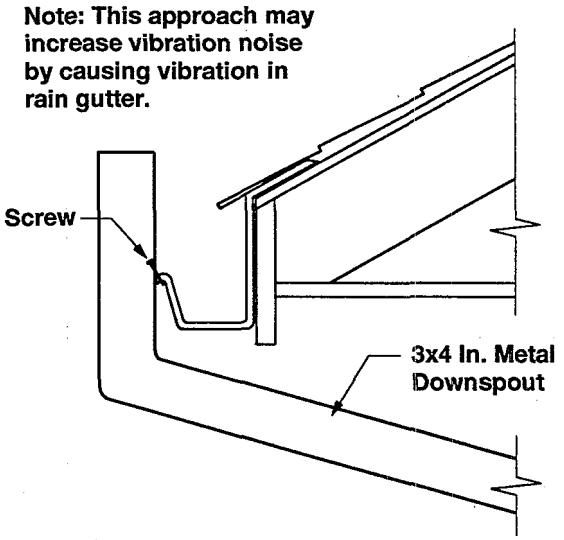

C) Metal downspout stack screwed directly into lip of rain gutter.

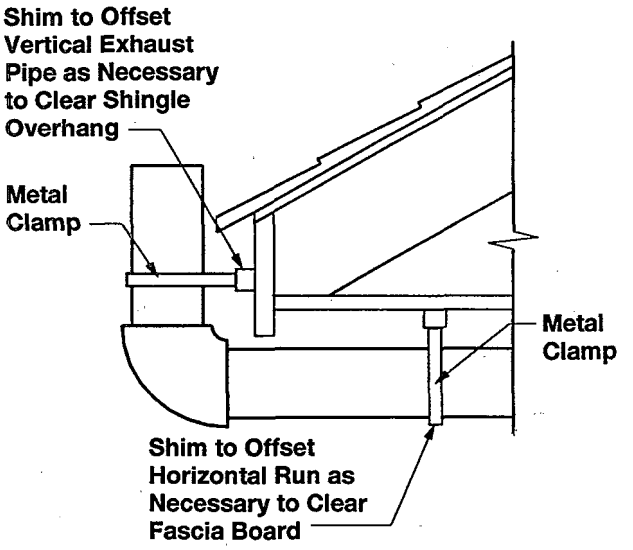

D) Stack attached directly to fascia with clamp, when there is no gutter.

Figure 31. Some alternative methods for supporting exterior stacks where they are routed around a roof overhang.

upward. As usual, the horizontal run should be sloped slightly downward toward the house to prevent accumulation of condensate or rainwater at low spots.

To support this extension of the stack away from the house, it is advisable to support the vertical riser against the house as close to the soffit as possible. In Figure 30A, this is shown being accomplished using a clamp (e.g., as in Figure 29E) or galvanized metal strapping (as in Figure 29F) attached to the veneer just below the first elbow. For added security, Figure 30A also shows a second clamp or metal strap supporting the horizontal run from the soffit overhead. Because the horizontal run must be offset below the soffit in order to clear the fascia, a shim is shown between the horizontal pipe and the soffit. In practice, this offsetting shim would extend all the way from the soffit to the pipe; in this regard, the depiction in Figure 30A is misleading.

The final vertical segment of the stack extending above the gutter is also commonly supported from the roof or gutter. In Figure 30A, this is accomplished by a continuous loop of plastic strapping that loops tightly around the stack and is screwed into (or inserted through a slit in) the lip of the rain gutter. Another screw through the strapping into the PVC pipe prevents the pipe from slipping down through the strapping loop over time. The strapping (as well as the downspouting) can be painted to match the existing house finish.

Figure 31B shows another possible approach for supporting a PVC stack near the gutter. In this case, nylon tie material (perhaps 3/8 in. wide) or plastic strapping is looped tightly around the stack and is nailed into the roof beneath the lower shingle.

If there is no rain gutter, as in Figure 31D, the stack can be attached directly to the fascia board (in this example, using a clamp or galvanized metal strapping). Since the lower shingle can extend out from the fascia by an inch or more, the stack will have to stand off from the fascia by that distance. For this reason, a shim is shown in the figure to create the stand-off. (In practice, the shim would extend all the way from the fascia to the pipe.) Alternatively, one could notch the lower shingle to accommodate the stack, avoiding the need for a stand-off shim. However, a mitigator is probably well advised not to do anything (such as notching a shingle) which might cause (or be perceived to cause) subsequent water problems on the roof, unless it is absolutely necessary.

When downspouting is used as the stack, the vertical downspout against the house will angle outward and upward away from the house at a point a couple of feet below the soffit. It then bends back to the vertical as soon as it has cleared the rain gutter. This situation is depicted in Figures 21, 31A, and 31C. As with the PVC stack, the downspout stack should be attached tightly to the house just below the point at which it bends away from the house. The final vertical segment should also be attached to the rain gutter or roof. For example, it can be attached to the gutter using a tight loop of plastic strapping screwed into (or inserted through a slit in) the lip of the gutter, as illustrated in Figures 21 and 31A. This is the same approach shown for PVC pipe in Figure 30A. As other options, it could be attached using methods analogous to those shown for PVC pipe in Figures 31B and 31D. Another possible alternative, screwing the downspout directly into the gutter, is illustrated in Figure 31C. This latter alternative could increase the amount of vibration noise transmitted to the gutter.

Where an exterior stack penetrates straight up through the roof overhang (Figure 30B), the stack is supported against the side of the house, up to the soffit. The stack must be positioned so that it will penetrate the soffit and roof in between the joists and rafters. The hole through the soffit and the hole through the roof can be cut with a hole saw or a reciprocating saw, with much care taken to align these two holes.

The procedure for installing the stack through the overhang penetration, and for restoring the water-tightness of the roof, is the same as that described previously for installing the exhaust from an attic-mounted fan through the roof. See *Exhaust piping from fans mounted in attic* in Section 4.6.4. Some caulking and finishing around the hole through the soffit would be desirable to improve the appearance. As with the attic-mounted fan, the exhaust stack should extend above the roof by a foot or two.

Exhaust piping from exterior fans—finish around the stack. Where the exterior exhaust stack is downspouting, the final finish will usually involve painting the downspouting and the downspout supports to match the existing rain gutter downspouts.

Where the exterior stack is Schedule 40 PVC piping, painting the stack (or coating it with a UV-protectant) will be even more important. Not only will the painting improve appearance, but it will provide some protection from UV damage. Another method for protecting the exterior stacks and improving their appearance is to box them in, and to paint the resulting enclosure to match the house. The stacks could be framed and boxed in using exterior wood. One mitigator (Jo91) reports using pre-fabricated three-sided aluminum chases with flanges on the open side, obtained in 10-ft lengths. These chases can be attached to the side of the house covering the stack, avoiding the need for carpentry.

Considerations when SSD pipes penetrate horizontally from outdoors. The preceding discussion of exterior stacks under Section 4.6.5 has generally assumed the case where the SSD suction pipes have been installed vertically down through a basement slab from indoors, and where the piping has then penetrated the basement band joist to an exterior fan and stack.

Where the SSD suction pipes penetrate horizontally through the foundation wall from outside the house as in Figure 2, the fan and the stack will necessarily be outdoors. This situation is most likely to be encountered in slab-on-grade houses or in walk-out basements.

The detailed considerations in selecting, mounting, and wiring the fan, and in designing the exterior stack, are exactly the same for horizontal exterior SSD pipes as those described above for vertical interior SSD pipes. The only difference is that the exterior fan will be mounted on a riser extending upward from the horizontal exterior suction pipe as in Figure

US EPA ARCHIVE DOCUMENT

2, rather than being mounted on a segment of pipe extending out through the foundation wall as in Figure 27.

Exhaust piping from garage fans—general considerations. When the stack is inside a garage, the considerations in designing and installing the exhaust piping above the fan will differ somewhat from those discussed above for exterior stacks.

As discussed previously in Section 4.6.5 (see *Selecting the location of exterior or garage fans)*, fans for garage stacks may be located either near the garage slab, or in the garage attic. The fan location will have some impact on stack design. If the fan is located near the slab, the basic exhaust configuration will be similar to that shown in Figure 21 for exterior stacks. If the fan is in the garage attic, the configuration would be similar to that described in Section 4.6.4 for fans in house attics. Location of the fans in the attic could be particularly convenient when the garage has an accessible floored attic.

Exhaust piping from garage fans—selection of stack material. Whether the garage fan is near the slab or in the attic, exhaust piping inside a garage will usually always be PVC (or PE or ABS) of round cross section. Because the stack will not be visible outdoors, there is no longer an incentive to use downspouting as the stack material, or to go to the expense of using PVC of rectangular cross section.

Exhaust piping from garage fans—offset against garage wall. If the fan is in the attic, the piping penetrating into the garage can be routed upward immediately beside the garage wall, so that the stack riser can be almost flush against the wall. Since the fan is in the attic, there is no need to provide clearance for a fan below the stack riser. Hence, the need to offset the piping back against the house (or, in this case, the garage wall), so important for exterior fans, is not an issue.

If the fan is near the slab, so that clearance for the fan must be provided at the base of the riser, it may or may not be necessary to offset the stack against the garage wall. Such an offset may no longer be necessary from the standpoint of appearance, since the stack is inside the garage. Nor may it be necessary from the standpoint of supporting the stack, if the stack can be effectively supported from members in the attic roof truss. But an offset against the garage wall may still be desired in some cases, to get the stack out of the way of the occupant, or to enable support of the pipe by attachment to the wall studs behind the fire-rated sheetrock.

Exhaust piping from garage fans—connection of stack segments. As with exterior stacks and the rest of the piping network, the joints between the segments of stack and the fittings must be cemented tightly. If the fan is near the slab, leaks in the stack riser would result in radon-containing exhaust being forced into the garage. If the fan is in the attic, leaks would result in garage air leaking into stack, reducing the suction being maintained at the slab.

Exhaust piping from garage fans—support of stack. The support of exterior stacks against the side of the house was discussed above. When the stack is in the garage -- and in cases where the garage stack is nearly flush against the garage wall -- the stack could be supported against the garage wall (for example, using adaptations of the methods illustrated in Figure 29). In this case, the strapping, brackets, or clamps around the PVC stack would need to be screwed into the wall studs, or perhaps attached to the sheetrock using lag bolts.

However, the stack can also be supported overhead from attic floor joists or from braces and rafters in the roof truss in the garage attic. Depending upon how the stack and exhaust piping are routed in the garage attic, the support could be accomplished using strapping, hangers, or clamps, using adaptations of the methods illustrated in Figures 16, 17, 20, and 23, and discussed in Section 4.6.4 (see *Support for fans in attics).* When a garage stack is supported in this manner, and especially when the fan is in the attic, the configuration will resemble an interior stack in most respects, and the guidance in Section 4.6.4 would apply.

Exhaust piping from garage fans—piping runs in garage attic. Whether or not the fan is in the garage attic, the exhaust piping may have to make a horizontal run in the attic so that the exhaust point through the garage roof will be at an appropriate location. The criteria for selecting the location of the roof penetration have been discussed in Section 4.6.2 (see *Routing considerations with attic piping runs) and in Section 4.6.4 (see Selecting the location of fans for interior stacks).*

In this regard, one particular consideration for garage stacks is that garages are commonly one-story structures attached to two-story living areas. Since the garage stack will be immediately beside the wall between the garage and the living area, penetration of the stack straight up through the garage roof with no horizontal run would result in its discharging immediately beside the second story of the adjoining living wing. As a result, the exhaust piping will require some horizontal run in the garage attic in order to locate the discharge point at least 10 ft from any windows, attic gable vents, etc., in the upstairs living area overlooking the garage roof.

On the other hand, it is also common to encounter cases where the garage roof is at the same level as the roof of the living area. In these cases, it will be more common to encounter situations where the stack can extend straight up through the roof directly above the point where it enters the garage, without any horizontal run in the garage attic. This would be possible when the penetration from the basement into the garage can be made at a point where a straight vertical stack would result in an exhaust location that would meet the other criteria discussed in Section 4.6.2 (e.g., the exhaust will be on the rear slope of the roof).

Once the appropriate point has been identified for extending the exhaust pipe through the garage roof, the procedure for installing the attic piping, the fan (if it is in the garage attic), and the exhaust piping through the roof would be the same as that described in Section 4.6.4 for the interior stack/attic fan case.

Exhaust piping from garage fans—finish around the stack. Because the piping associated with garage fans will be

US EPA ARCHIVE DOCUMENT

inside the garage, the need to paint the garage stack, or to frame it in for the sake of appearance, will usually be greatly reduced compared to the case of exterior stacks.

As discussed toward the end of Section 4.6.3, it may sometimes be decided to frame in garage stacks as a means for meeting code requirements for a fire break where the plastic piping has penetrated the firewall between the basement and the garage. Framing in the garage stack would be an alternative to use of a fusible linkage or intumescent wrap type of fire break.

Caps and mufflers on the exhaust stack. The considerations regarding the decision to install a cap or muffler on an exterior or garage stack are essentially the same as those discussed in Section 4.6.4 for interior stacks.

Caps are not usually thought to be necessary. With exterior stacks, where the stack is discharging near the eave, there may be an increased risk that the cap, in deflecting the upward exhaust jet near the eave, could cause the exhaust to be swept back down under the overhang and re-entrained into the house. The caps would also tend to defeat a key objective of stacks fabricated from downspouting, namely, to make the stacks inconspicuous.

Where a downspout is used as a stack, one should not attempt to simulate a cap by bending the downspout into a "U" at the eave, so the exhaust is directed at back downward beside the eave. This configuration could be directing the exhaust down into the recirculation zone beside the house, increasing the risk of re-entrainment.

Mufflers will usually be needed for the high-suction/low-flow fans, but are not often needed with the in-line tubular fans.

Since most caps and all mufflers on the market are designed for use with round PVC piping, some adaptations would be necessary if they were to be installed in an exterior stack fabricated from downspouting.

Remote exhaust—a variation of the exterior stack. Some mitigators and homeowners are concerned about the aesthetic impact created by an exterior stack immediately beside the house, as in Figure 21. Where there is no garage, and where the exhaust system must be outdoors, one option that has been considered to avoid this impact has been to extend the exhaust pipe horizontally below grade to some point remote from the house, perhaps 10 ft or more away (El88, Wi91, Bro92). At this remote location, the buried horizontal piping is routed above grade and exhausted. When using this approach, some mitigators mount the fan where the piping comes above grade; others mount the fan in the buried section of the piping, inside a buried enclosure.

Assuming the case of a basement with SSD suction pipes installed through the slab vertically indoors, the exhaust piping from these suction pipes would penetrate the house shell below grade. This will usually mean penetrating the basement foundation wall below the band joist. A trench is dug from the point of the wall penetration to the point in the yard where the discharge point is to be installed; this location may be behind shrubbery, or in some other inconspicuous location. By EPA's mitigation standards, this remote location should be at least 10 ft from any public or private access routes, or from openings in adjacent buildings.

The horizontal run of piping between the penetration and the exhaust location is buried in this trench. If the fan is to be mounted above grade, one logical configuration would be to install a tee fitting on the remote end of this piping, with one leg oriented upwards and one downwards. A vertical riser would be installed on the upper leg, with the fan mounted vertically on this riser above grade. A stub of piping on the lower leg of the tee would extend down into a bed of gravel, in a pit excavated at that location. The purpose of this dry well below the fan is drain away any condensate or rainwater, and is especially important in cases where the contours of the lot necessitate that the pipe be sloped downward away from the house. One possible uncertainty with this configuration is whether the dry well may become flooded during wet periods.

If the contour of the lot is such that the buried horizontal pipe is sloped downward *toward* the house, the condensate and rainwater would drain back into the SSD riser in the basement. In that case, the dry well below the fan would be less necessary.

Another option that may sometimes exist for handling drainage when the pipe is sloped *away* from the house, is to extend the buried piping run to the point where it reaches grade level. In this case, the system would become identical to the remote portion of a DTD/remote discharge system as depicted in Figure 4: a trap is placed between the fan riser and the discharge line to prevent outdoor air from being drawn through the discharge line by the fan, and any condensate or rainwater drains away through the above-grade discharge. In this case, the dry well would be unnecessary.

The fan is secured vertically on the riser using flexible PVC couplings, perhaps a couple of feet above grade. By EPA's current standards, it would not be acceptable to simply allow the fan to discharge vertically at that height. Rather, in order to reduce exposure by persons in the yard nearby to the potentially high-radon exhaust, a stack would have to be appended to the fan discharge, so that the exhaust point would be at least 10 ft above grade. For structural stability, such a stack would have to be supported, e.g., with posts installed for this purpose, or perhaps with guy wires. Such a stack would often eliminate the aesthetic benefits of moving the exhaust away from the house.

If the stack were not installed, contrary to standards, the fan exhaust would have to be protected in order to prevent debris and animals from dropping into the blades, or to keep children from getting their fingers caught in the blades. Some fan manufacturers sell grilles that could be installed on the exhaust side of the fan for this purpose. Alternatively, a short length of PVC piping might be installed on the exhaust side of the fan, perhaps with a hardware cloth screen on top.

While such remote location of the fan and exhaust system would improve aesthetics if a 10-ft stack were not required, there are some potential disadvantages to this design. Even if

US EPA ARCHIVE DOCUMENT

no 10-ft stack is needed on the remote fan, this configuration will be more expensive than the case where the exterior fan rises immediately beside the house, due to the trenching required to bury the horizontal run away from the house, and due to the added effort involved in coring through the foundation wall below grade rather than sawing through the band joist (He91b, He91c). The electrical wiring will be complicated slightly, since a conduit will now have to be laid out to the remote fan. There will be some suction loss in the length of buried piping, although this will generally not be a serious problem when 90-watt fans are being used, and it will be comparable to the back-pressure loss that would be created by a stack above the eave.

The preceding discussion assumes the remote fan is installed above grade. Some mitigators install the fan in a buried enclosure, for aesthetic reasons. The enclosure is accessible via an access door in the top of the enclosure at grade. To reduce the size of the excavation for the fan enclosure, some firms mount the fan horizontally; the buried horizontal piping run penetrates the enclosure on each side, connecting to the fan. A hole is drilled on the underside of the fan housing, and gravel is installed below the open-bottomed enclosure, to allow condensate entering the fan housing to drain away. Others make the enclosure larger and deeper, so that the fan can be mounted vertically. With proper excavation, any of the approaches just discussed with a remote fan mounted vertically above grade could be installed with the fan vertically below grade.

With any system having the fan below grade, great care must be taken to ensure that the piping and the dry well beneath the fan drain properly. Cases have been reported where careless installation resulted in the ultimate flooding of the entire fan enclosure and underground piping run. Also, the lifetime of fans mounted in potentially humid underground enclosures has not been demonstrated.

Because of these concerns, it is anticipated that EPA's final mitigation standards will prohibit mounting of fans below ground.

Requirement that fans be outside livable envelope of house. As emphasized at the outset of Section 4.6.4 (see *Overall design considerations for all stack configurations)* and elsewhere in the preceding discussion, EPA's interim mitigation standards require that SSD fans be outside the livable envelope of the house. Although extensive data are not available documenting the frequency and effects of pressure-side exhaust leaks when fans are indoors, the potential risk of such leaks is considered great enough that it warrants the aesthetic impacts and other complications involved in placing the fan outdoors when an exterior stack is used.

Mounting a fan indoors is contrary to EPA's standards. If an installer were to consider mounting a fan indoors because it was truly impractical to mount the fan outdoors, that installer should consider special precautions in an effort to reduce the risk of exhaust leakage into the livable area. It must be recognized that there is no evidence that any such precautions would compensate for the risks incurred if the fan were mounted indoors. Such precautions thus could never be considered as a substitute for abiding by the standards.

Among the precautions that might be considered could be the following: a) using a fan having an integral housing, to avoid leakage through seams in the housing; b) using Schedule 40 (heavy gauge) PVC, PE, or ABS for all system piping; c) installing only a minimal length of exhaust piping on the pressure side of the fan inside the house; d) firmly supporting the interior piping against both vertical and lateral movement, especially on the pressure side of the fan, so that any physical stresses that might be imposed on the fan or piping by the occupants would be unable to create any flexing of this piping network that would loosen or break piping seals; and e) carefully caulking all seams in the piping on the pressure side of the fan would, even though they have been carefully cemented and may appear to be gas-tight at the time of installation. These seams include those in the flexible PVC couplings connecting the fan to the piping (even though the hose clamps appear to have produced a gas-tight seal), and seams between PVC piping and fittings (even though these joints have been cemented).

Requirement that exhaust be discharged at least 10 ft above grade. As emphasized at the outset of Section 4.6.4 (see *Overall design considerations for all stack configurations)* and elsewhere, EPA's interim mitigation standards require that SSD exhausts be released at least 10 ft above grade, among other requirements. For exterior stacks, this requirement generally means that a stack must extend up beside the house, usually to a point above the eave. It is anticipated that EPA's final standards will explicitly require that the exhaust be discharged above the eave, preferably the highest eave. The objective of this requirement is to reduce the risk of exhaust re-entraining back into the house or exposing persons outdoors. While there is not an extensive data base defining the extent of re-entrainment or exposure with different exhaust configurations, the health risks that could result are considered sufficiently great that they warrant the aesthetic impact and cost of installing an exterior stack to avoid the increased risks that might be anticipated if the exhaust discharged at grade level.

Exhausting at grade level immediately outside the house, i.e., installing a system similar to that in Figure 21, but eliminating the exterior stack up to the eave, is contrary to EPA's standards. If an installer were to consider exhausting at grade level because it was truly impractical to install an interior or exterior stack, that installer should consider special precautions in an effort to reduce the risk of exhaust re-entrainment and exposure to persons outdoors. It must be recognized that there is no evidence that any such precautions would compensate for the risks incurred if the exterior stack were eliminated. Such precautions thus could never be considered as a substitute for abiding by the standards.

Results to date suggest that if the exhaust were released at grade, least re-entrainment is likely to occur if the exhaust were directed horizontal to grade, 90° away from the house. Limited results suggest that exhaust horizontally at grade, directed 90° away from the house, can sometimes result in re-entrainment no more severe than that resulting when the

exhaust is vertical above the eave, at least under the conditions tested (Fi91).

Intuitively, to reduce re-entrainment, it would seem desirable for the grade-level exhaust to be at least some minimum distance (e.g., at least 10 ft) from openings in the house shell (primarily windows and doors), if at all possible. To reduce exposure of persons outside the house, the other EPA exhaust standards should be met: the discharge location should be at least 10 ft from public or private access, and from openings in adjacent buildings. In particular, the exhaust should not be near patios or under decks.

One approach for directing the exhaust away from the house at grade would be to replace the exterior stack shown in Figure 21 with the following. A short length of vertical pipe would be attached to the coupling above the fan, to provide a connection for a 90° elbow. The elbow would be cemented to the top of this short vertical pipe, with the outlet of the elbow being horizontal to grade, directed away from the wall of the house. A short length of horizontal pipe cemented into the outlet of this elbow could be important, so that the exhaust gases develop a clear momentum away from the house before being discharged. If the gases were discharged directly from the horizontal end of the elbow, without the length of piping, there would be a turbulence resulting from their deflection in the elbow that could cause them to mix more rapidly with the outdoor air, rather than being expelled away from the house in a clearly defined jet.

If there is not going to be a stack above the fan, another option would be to install the fan vertically downwards, rather than upwards as in all of the preceding figures. In this case, the 90° elbow that is attached to the end of the horizontal pipe through the wall would be directed down instead of up. Downward mounting might reduce the visibility of the fan in cases where the exhaust piping penetrates the foundation wall at a sufficient height. Again, it is recommended that the exhaust from the fan be re-directed horizontally away from the house by an elbow on the outlet of the fan, as discussed in the preceding paragraph.

A grade-level exhaust *must not* be directed parallel to the side of the house, immediately beside the house. Specifically, it must not be directed downward toward grade beside the foundation, or upward beneath the eave along the face of the house, or horizontal to grade parallel to the house. In many installations where re-entrainment has been confirmed to have been a problem in the past, the exhaust has been parallel to the side of the house. In one commonly encountered configuration which should always be avoided, the grade-level exhaust is directed down toward grade by a dryer vent mounted on the side of the house, connected to the end of the piping penetrating the foundation from inside the basement.

4.7 Slab Sealing in Conjunction with SSD Systems

House air will leak into the SSD system through any unclosed openings in the slab. Such leakage can interfere with the extension of the suction field beneath the slab (potentially reducing radon reduction performance). It will also increase the house heating and cooling penalty; heated or air-conditioned air will be drawn out of the house by the system through the unclosed cracks, and will be replaced by infiltration of outdoor air. If sufficient house air is drawn into the system via unclosed slab openings, the SSD system could also contribute to depressurization of the basement or house, thus potentially contributing to back-drafting of combustion appliances.

For the purposes of this discussion, slab openings are subdivided into three categories: "major" openings, which should always be sealed as part of SSD installation unless sealing is truly impractical; "intermediate" openings, which should generally be sealed, if this is reasonably possible; and hairline cracks, for which sealing can be helpful but is often not required.

Major openings. The sealing of *major* slab openings can be very important in achieving good performance and reducing operating costs. "Major" entry routes are defined here as those which are relatively large and distinct, such as perimeter channel drains, large openings through the slab around utility penetrations, floor drains connecting to the soil or the sub-slab region, and sump pits. Such major routes should always be sealed. In cases where such major routes are inaccessible -- such as a perimeter channel drain concealed behind floor and wall finish -- a conscious decision may sometimes be made to accept the penalties of leaving the opening unsealed, rather than incurring a cost that the homeowner would find unacceptable in trying to seal this opening. However, in such cases, the homeowner should be consulted on this decision, and advised of the reductions in performance and the increase in operating costs that may result.

Intermediate openings. In addition to the "major" slab openings discussed above, there will often be smaller, but still potentially important, openings of intermediate size. Examples of such "intermediate" openings include, e.g., the wall/floor joint when there is a modest but distinctly visible gap (perhaps 1/32 to 1/16 in. wide or greater), partially open expansion joints, and small openings through the slab (e.g., around individual utility pipes penetrating the slab). Such intermediate openings should routinely be sealed closed. However, where such intermediate openings are inaccessible, e.g., where a 1/32- to 1/16-in. wide wall/floor joint disappears behind wall finish in a finished part of the basement, the inability to seal this opening will be less of a concern, compared to major openings.

Hairline cracks. Hairline cracks include, for example, settling cracks or wall/floor joints which are tight, with no (or very little) separation. Given their length, the total leakage area represented by hairline cracks could be meaningful despite their narrow width. However, such cracks can be difficult to seal properly and effectively. Simply applying a bead of caulk on top of this crack in a basement may be helpful, but it is unclear how effective this sealing would be, or how durable. To seal such cracks effectively, a channel might have to be routed in the concrete along the crack, to provide adequate surface area for adhesion of the sealant (see Section 4 in Reference EPA88a); such a procedure would be time-consuming, and could significantly increase the cost of the installation.

US EPA ARCHIVE DOCUMENT

Experience has indicated that a properly designed SSD system can usually handle the leakage from hairline cracks without a significant reduction in system performance. Therefore, since sealing the cracks is difficult and is often not necessary for good system performance, special efforts to seal hairline cracks will often not be warranted. Attempts to seal hairline cracks will likely be most warranted in cases where sub-slab communication is very poor and the cracks are near the SSD suction pipes. Any leakage through the cracks in poor-communication cases might reduce the performance of a marginal SSD system, which would be having a hard time extending a suction field even in the absence of such leakage.

Because caulking of hairline cracks may reduce the heating/cooling penalty and possibly improve system performance, mitigators who routinely apply a bead of caulk to accessible wall/floor joints, even when the crack is only a hairline and there is no gap, should continue to do so. Homeowners who are installing their own systems (and who are thus not concerned about the labor costs of applying the caulk) may wish to do this. However, it must be recognized that the seal may not be durable or fully effective, and that it may or may not be possible to detect the benefits of such caulking.

General comments on sealing. In the discussion here, the word "seal" is not used in the sense of a true air-tight seal. While such a true seal would be desirable, it is often difficult to achieve such a true seal, and almost impossible to maintain it permanently as the foundation shifts over the years. In the context here, where the objective is to significantly reduce house air flow into the SSD system, a seal is considered adequate if it closes the opening (and reduces the air flow through it) to a large degree, even if not 100%. Thus, for example, if an opening through the slab is sealed with caulk, and if the bond between the caulk and the surrounding concrete breaks over time (due, e.g., to foundation shifting), the caulk may still be blocking a large amount of the air flow through the opening.

Detailed procedures for sealing slab openings are discussed in Section 4 of Reference EPA88a. The discussion below reviews key features for sealing some of the openings of particular concern from the standpoint of SSD performance.

4.7.1 Perimeter Channel Drains

Perimeter channel drains, also known as canal drains or "French" drains, are 1- to 2-in. wide gaps around the perimeter of basements (i.e., 1- to 2-in. wide wall/floor joints). A perimeter channel drain is often intended primarily to drain water that enters the basement through the porous face of block foundation walls during wet weather; in some cases, holes are drilled through the face of the lower course of block, at a level below the top of the slab, to facilitate this water flow. The drains will also handle water entering from on top of the slab, e.g., due to a clothes washer overflow. Perimeter channel drains can also be specifically designed to handle water entering from beneath the slab, although many are not.

The water entering the perimeter channel drain is commonly routed to the region beneath the slab. In some cases, there are drain tiles under the slab, draining to an existing sump in the basement or to a remote discharge; much of the water from the perimeter channel drain would be expected to enter these tiles and drain to the sump or discharge. In other cases, there will be no drain tiles, in which case the sub-slab aggregate will be serving as a dry well. In still other cases, the perimeter channel drain may drain, via an underground channel of aggregate, to a dry well installed remote from the house. Where the basement is finished, the perimeter channel drain will be concealed behind the wall finish.

Perimeter channel drains can be expensive to seal properly, even when they are accessible. Accordingly, some mitigators have reported installing SSD systems without sealing the perimeter channel drain, and obtaining reasonably good radon reductions, at least when sub-slab communication is reasonably good. To avoid undue leakage of house air into the system, the SSD suction pipes were installed toward the center of the slab, away from the perimeter. No studies have been conducted to evaluate the effect of leaving the perimeter channel drain unsealed. But since the opening created by the perimeter channel drain is so large, so widely distributed, and so strategically located, some penalties might be expected to result from this approach. Indoor radon concentrations might be expected to rise during cold weather; the ability of the SSD treatment to extend to block foundation walls would seem to be greatly reduced; and the heating/cooling penalty would intuitively be greater than average.

Thus, serious consideration should always be given to properly sealing perimeter channel drains, except in those cases where they are concealed behind wall finish (so that the cost of sealing could be prohibitive) or where water drainage problems or code violations might be created by sealing. A decision not to seal part or all of the perimeter channel drain should be made with consultation from the homeowner. The mitigator should be prepared to seal the channel drain, or to otherwise modify the system to compensate for air leakage through the drain, if an initial mitigation system does not achieve adequate radon reductions due to the open drain.

In some locales, perimeter channel drains are required by code. In some cases, the drains have an important water drainage function, as discussed above. Thus, any steps to seal the drains must be taken with care to properly maintain the drainage function.

Where the perimeter channel drain is *known* to have no water drainage function either from above or below the slab and where codes do not require that the drain be left open, the 1- to 2-in. wide cap can simply be mortared closed. While mortaring the drain closed may be the simplest approach, it can be a risk for mitigators. The mitigator may be considered liable for any subsequent drainage problems that might be attributed to the closure of this supposedly non-functioning drain.

When the perimeter channel drain has a water drainage function, it can be sealed in a manner which maintains that function. See Figure 32A, and Section 4 of Reference EPA88a. The objective of this sealing approach is to install a caulk seal in the channel at a level beneath the top of the slab, so that there is still: a channel beneath the seal (to handle water entering through weep holes at the base of the block wall, or

US EPA ARCHIVE DOCUMENT

US EPA ARCHIVE DOCUMENT

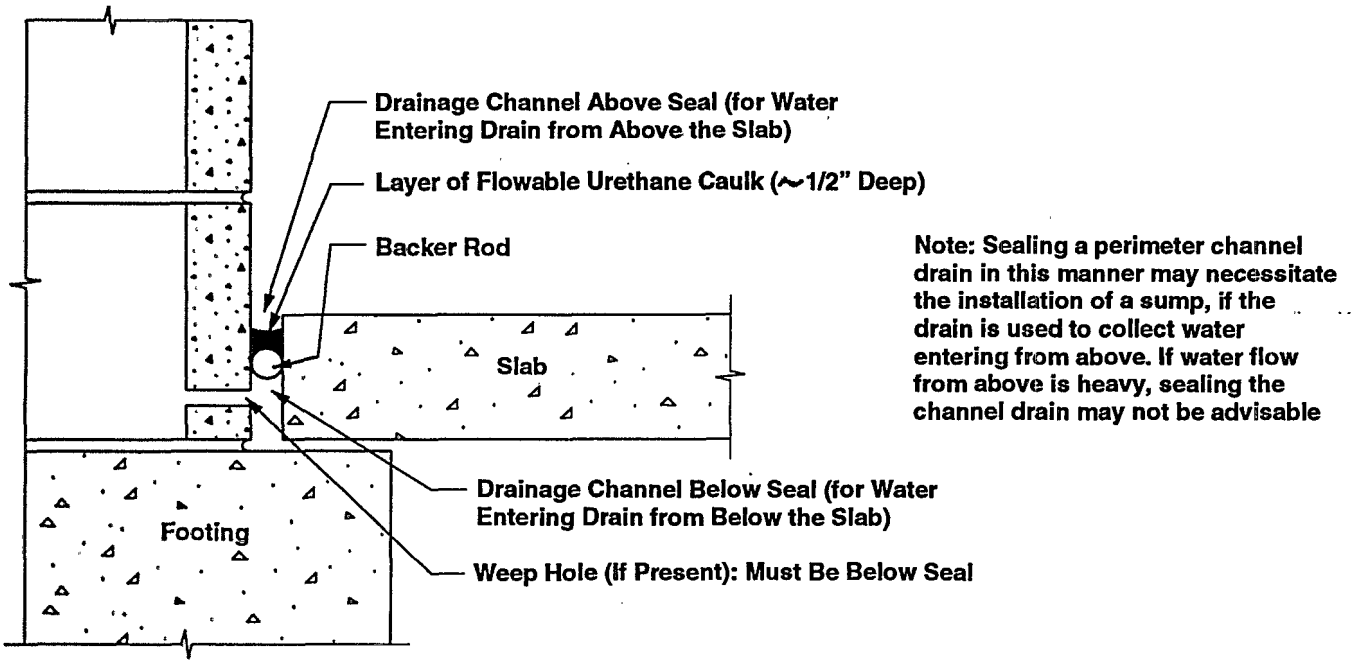

Figure 32A. Cross-section of a sealed perimeter channel drain, illustrating water drainage channels both above and below the seal.

otherwise entering from beneath the slab); and a channel above the seal (to handle water entering through the block face above the slab, or otherwise entering from on top of the slab).

By this approach, backer rod of a diameter slightly greater than the width of the perimeter channel drain (or some other appropriate material) must be stuffed down into the gap between the slab and the foundation wall, to support a layer of sealant. Backer rod is a compressible, closed-cell polyethylene foam material which is formed into cords of alternative diameters. The top of the backer rod must be at least 1/2 to 1 in. below the top of the slab; the bottom of the backer rod must be at least 1 to 2 in. above the bottom of the slab (or the top of the footing). If weep holes have been drilled through the face of the block wall at a level below the top of the slab, to allow water inside the block cavities to flow into the perimeter channel drain, the bottom of the backer rod must be above those holes, so that they remain open.

The top of the perimeter channel drain is then closed with an appropriate sealant, supported by the backer rod. The sides of the perimeter channel drain must be clean (and preferably should be dry) when the sealant is applied, to ensure a good adhesive bond between the sealant and the concrete. The preferred sealant is flowable urethane caulk, since this caulk will effectively fill in the irregular space between the top of the backer rod and the slab, and will adhere well to the concrete. The urethane caulk layer should not be more than about 1/2 in. deep, since it may not cure properly if it is much deeper than this; see the instructions from the manufacturer. The top of the urethane caulk sealing the drain must be below the top of the slab, by perhaps 1/2 in. or more, creating a channel on top of the seal.

This sealing approach prevents house air from flowing down through the perimeter channel drain into the sub-slab region. But at the same time, it permits water flowing through the weep holes beneath the seal to flow into the gap under the backer rod, and from there into the sub-slab aggregate (or to wherever the perimeter drain was originally designed to direct the water). Also, any water entering from above the slab has a channel in which to collect, on top of the caulk seal.

If a significant amount of water is expected to enter the drain from above the slab, the channel above the caulk seal will have to be designed in a manner which will allow this water to drain away. One approach could be to leave gaps in the seal at intervals around the perimeter, so that the water in the upper channel can drain down through those gaps into the sub-slab

region as originally intended. These gaps should be located in particular along those walls where water flow from above the channel is expected to be heaviest. Such gaps in the seal would, of course, result in house air leakage into the SSD system through those gaps (and, potentially, radon entry into the house through the gaps). However, since most of the perimeter channel drain would be sealed, the seal would be significantly reducing the amount of air flow. Where a gap was left in the seal, the channel under the seal should be sealed on the sides of that gap, so that the sub-seal channel remains sealed off from the basement.

Another option if there is significant water entering from above the slab would be to utilize an existing sump, if present, or to retrofit a new sump into one corner of the basement to handle this water. See Figure 32B. This figure assumes that drain tiles had been installed under the slab during construction to collect water from the perimeter drain, and that the tiles drain to an existing sump. Use of a sump may not always be satisfactory in cases where water enters the top channel at points remote from the sump, since the water may not reliably flow through the shallow channel over extended distances to the point at which the sump is located, without overflowing onto the slab at some other location.

Whether an existing sump is available, or whether a new sump has to be installed, a channel would have to be routed in the top of the concrete slab, directing the water in the top channel of the sealed perimeter drain into the sump, as shown in the figure. Especially in cases such as that in Figure 32B, where the existing or new sump connects to the sub-slab region, the sump must be capped so that it is not a major unsealed slab opening (see Section 4.7.4). Because the top channel in the sealed perimeter channel drain will be routinely directing water into the sump from above, the sump cover will have to be fitted with a trap so that the water drainage function of the sump can continue while the cover remains air-tight. Sump covers are discussed in detail in Section 5.5.

The preceding discussion concerning the capping of the sump assumes the case where it has been decided not to draw suction directly on the sump, and where a SSD suction pipe through the slab remote from the sump is the preferred approach. If the sump is an existing sump with drain tiles emptying into it, as in Figure 32B, one might commonly elect to install sump/DTD instead of SSD, as discussed in Section 5. The steps for sealing the sump and the perimeter channel drain would be essentially the same if sump/DTD were the intended mitigation approach, as discussed in Section 5.7.

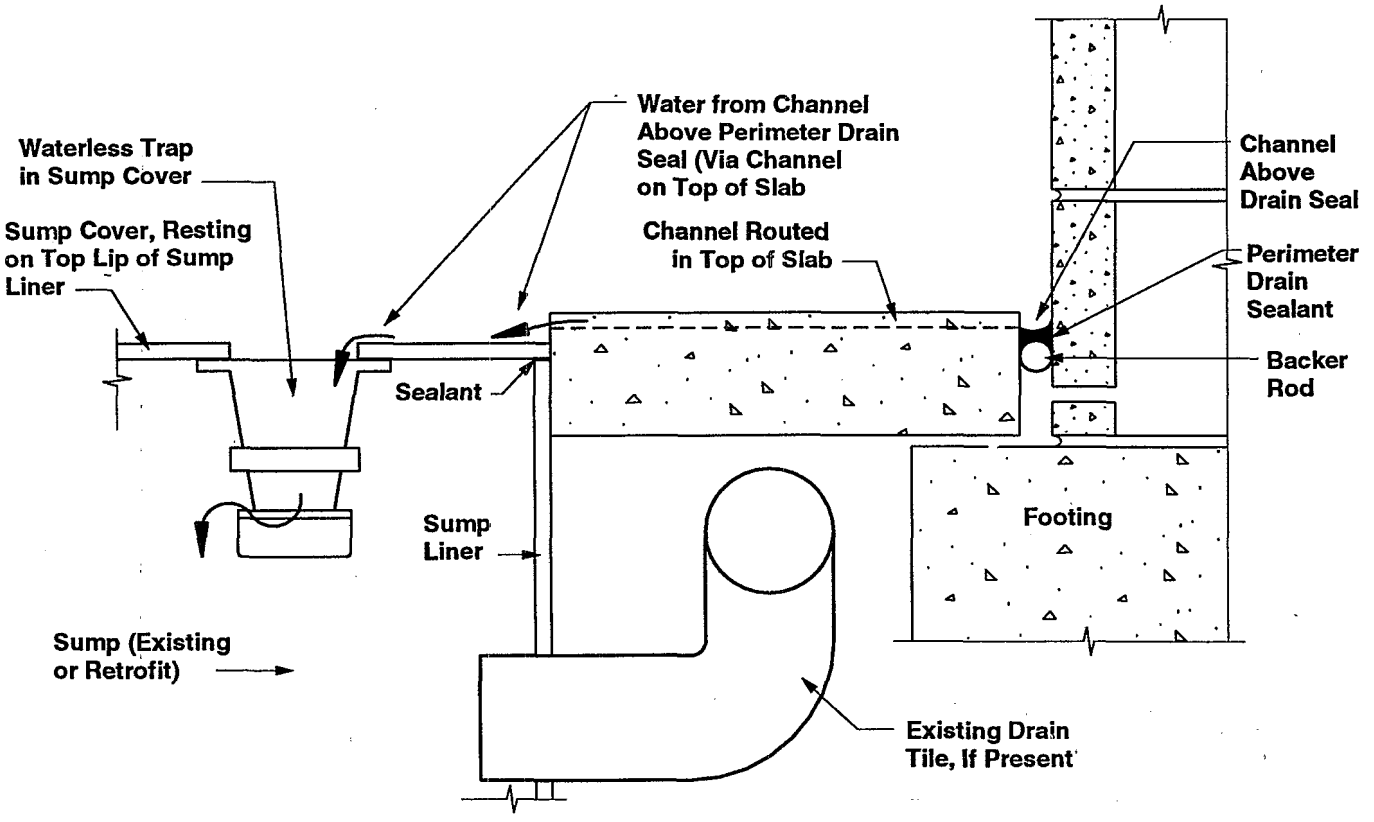

Figure 32B. Method for sealing the sump and the slab channel leading to the sump in cases where perimeter channel drains empty into a sump in the basement.

US EPA ARCHIVE DOCUMENT

If a sump were not already present, and if a sump had to be retrofit in order to handle water from on top of the sealed perimeter channel drain, this would add to the SSD installation cost. In some cases, the perimeter channel drain will have initially been designed to route the water into the sub-slab aggregate with the aggregate serving as a dry well (i.e., with no drain tiles to handle the water); in other cases, the channel drain will route the water into a gravel channel leading to a remote dry well. In such cases, the sump installed as part of the channel drain sealing process could do the same, and it would not be necessary to install a sump pump and water discharge line in the sump.

In many cases, a portion of the perimeter channel drain may be inaccessible, for example, concealed behind wall finish. In such cases, it may be decided to seal the accessible portion of the perimeter channel drain (in the unfinished part of the basement), but to leave the inaccessible portion (in the finished part) unsealed, at least initially, due to the costs involved in removing and replacing the finish. When this is done, the exposed open ends of the sub-seal channel must be caulked shut where the seal ends, so that house air cannot leak into the sub-seal channel. When a portion of a channel drain is sealed, the mitigator should understand how that particular channel drain functions (e.g., using aggregate as dry well, or utilizing sub-slab drain tiles), to ensure that drainage problems will not be created.

4.7.2 Other Major Holes through Slab

In addition to perimeter channel drains, there will be other cases where major holes exist through the slab. One common example is the opening, commonly about 2 ft square, often left in the slab around the water and sewer lines that come up through the slab under bathtubs and shower stalls that are installed on slabs. This opening is intended to provide the plumber some flexibility when installing the bathtub. (There may also be openings around the water and sewer penetrations under sinks and commodes in the bathroom, but these will generally be smaller than that around the bathtub plumbing.) Some other examples include unused sump holes, or a hole at the site of some former structure in the basement. An extreme example of a large hole through the slab would be the case where some portion of the slab is missing, leaving bare earth exposed. This latter situation could occur, e.g., when small wings to the basement (such as root cellars or greenhouses) are left with bare-earth floors.

Slab holes around bathtub plumbing. Where a bathroom has been installed on a basement slab or a slab on grade, the plumbing for the bathtub (and the slab opening around this plumbing) is commonly accessible through an access door through the frame wall at the head of the tub. This slab hole could be mortared shut, with the water and sewer lines penetrating the new mortar. However, this could potentially interfere with any subsequent plumbing work that may have to be done on the system. A simpler approach might be to close the slab opening using an expandable closed-cell polyurethane foam. The foam expands as it hardens and cures, tightly closing the opening. If access to the plumbing below the slab is subsequently needed, portions of the foam can be cut away (e.g., with a utility knife) as necessary to expose the plumbing. After the plumbing repairs have been made, any holes cut in the hardened foam can be filled with new foam, or with caulk or other suitable sealant.

In some cases, no access door will be provided for the bathtub plumbing, and the major slab opening under the bathtub will not be as conveniently accessible. In such cases, a decision must be made regarding whether to leave the bathtub slab opening unclosed, or to incur the expense of creating and then restoring an opening in the wall to allow the sealing to be accomplished. Some mitigators routinely make the hole through the wall and seal the slab. One mitigator reports installing an air vent grille (such as those used with forced-air heating systems) in the wall hole after the slab is sealed, as a convenient and neat approach for restoring the wall hole (Ba92).

Other mitigators recommend postponing efforts to seal such inaccessible bathtub slab openings (KI92). Where sub-slab communication is reasonably good and radon levels are not real high, it may sometimes be advisable to initially install the SSD system without closing the inaccessible bathtub opening, with the intent that that sealing step could be taken later if the initial SSD installation did not achieve adequate performance.

Miscellaneous major slab holes. Where holes of any significant size exist through the slab, and where these holes serve no function, the holes should be closed.

If the soil is not level beneath the slab at the location of the slab hole and if the hole is sufficiently large, it may be necessary to fill in the sub-slab region up to the underside of the slab, using some suitable fill material. To reduce subsequent settling of this fill, and cracking of the patch that will be applied on top, any such fill should be compacted.

Especially where the hole is in an exposed location where there will be foot traffic, the hole will best be closed using concrete or non-shrink mortar. Use of concrete or mortar may also provide the best appearance, blending in with the remainder of the slab. The sides of the slab around the perimeter of the opening should be cleaned, in an effort to improve the bond between the new and the old slab. New concrete or mortar is poured to fill the hole, and the perimeter of the patch (between the new and old concrete) is tooled to provide a channel about 1/2-in. deep. When the new concrete or mortar has hardened, this channel should be flooded with flowable urethane caulk, in and effort to plug any crack that may form as the new mortar shrinks and settles.

In some cases, when the hole is in a remote or less accessible location, one might elect to close it using expanding foam, as discussed previously for the case of slab openings under bathtubs.

Sections of missing slab. From time to time, entire sections of basement slab have been found to be missing in certain houses. For example, the basement may have a small earthen-floored wing which is used as a root cellar. Or, some significant portion of the basement floor may have been left unpaved, for one reason or another.

US EPA ARCHIVE DOCUMENT

In such cases, the best course of action will be determined by the specific circumstances. Depending upon the size and use of the unpaved area, it may be recommended to the homeowner that a slab be poured (with aggregate beneath) for that section.

In other cases, perhaps the best approach would be to treat it as an unpaved crawl space wing adjoining the slab. In this case, plastic sheeting would be sealed over the exposed soil. If SSD on the paved portion of the basement proved to be insufficient to adequately reduce radon levels, the SSD system might be supplemented by a sub-membrane depressurization under this plastic sheeting (see Section 8).

4.7.3 Untrapped Floor Drains Connected to the Soil

Floor drains in a basement slab can present a significant problem, if they: a) drain to soil (e.g., via perforated drain tiles beneath the slab, or via pipes to a septic system); and b) are not trapped.

When the drain empties through perforated piping that passes through the sub-slab region and when the drain is not trapped, house air can be drawn into the SSD system through the untrapped drain and through the perforations in the drain tiles. The length of tiles leading from the drain could be "intercepting" the sub-slab suction field, providing a source of leakage air that could prevent the suction field from extending further beneath the slab.

Due to the amount of air that can move through the floor drain and drain tile, the SSD system may not be able to adequately depressurize the soil surrounding the drain tile. Thus, the untrapped floor drain may continue to serve as a significant radon entry route into the house.

One technique to determine whether a particular floor drain is untrapped would be to remove the top grille and inspect using a flashlight during the visual inspection of the house (Section 3.2). Other techniques include chemical smoke testing at the drain during the visual inspection, to assess whether air is flowing up through the drain; and radon grab sampling in the drain (Section 3.4). It can be difficult to independently determine whether the drain connects to drain tiles.

To address both the potential disruption of the suction field and the continued radon entry through the floor drain, the floor drain must be trapped. Even if the floor drain connects to a septic system by a solid pipe, rather than the perforated piping connection to the soil considered previously, trapping the drain will have the benefit of preventing radon entry into the house from the septic system.

If the floor drain already contains a trap, it must be ensured that this trap remains full of water. If the floor drain does not contain a trap, one can often be retrofit. Dranjer Corp. sells several models of plastic "waterless" traps for various applications, such as the "F-series" trap shown in the sump cover in Figure 32B. A slightly modified version of that trap, the DR-2, has been designed to fit into many standard floor drains ranging from 2 to 8 in. in diameter, beneath the existing floor drain grille. These units seal the existing drain, and direct all water through the throat of the Dranjer unit.

Although designs of the different models vary slightly, the principle of each is that, at the bottom of the throat, downward-flowing water encounters an impoundment which it must overflow before entering the sewer line. This impoundment may be a small bowl in which the base of the throat is submerged, as in Figure 32B or in the DR-2; or, in the "J-series" unit, the base of the throat may curve upward in the form of a simple P trap (see Figure 5 in Reference EPA88a). The opening at the top of the impoundment is covered by a weighted ring (as in Figure 32B) or a ball, which floats to permit the water to overflow. However, when no water is flowing, the ring or ball seats into the opening. The seating of the ring or ball prevents gas movement upward or downward through the drain; i.e., soil gas cannot move upward into the house, and house air cannot be drawn down through the drain by the SSD system. The floating ring or ball provides a seal even in cases where there is no water in the trap, hence the term "waterless."

If the floor drain is never used, an alternative approach would be to simply mortar the drain opening shut. This approach is not recommended unless it is certain that the drain will indeed never be needed, and is not required by code. The drain could also be plugged with a rubber stopper, which could be removed on any occasion when the drain were needed.

Sometimes when a floor drain drains to a septic system, there will be a clean-out plug in the drain line downstream of the trap. If this plug were missing, a situation which has sometimes been observed, soil gas could still flow up into the house, bypassing the trap, even when the floor drain trap is full of water. If this clean-out drain plug is missing, it must be replaced (e.g., with a rubber stopper).

4.7.4 Sumps

Sumps not only provide a major opening through the slab, but also, if drain tiles empty into the sump, as is often the case, they can connect widely to the aggregate and soil beneath the slab and around the foundation. As such, they can be major soil gas entry routes, and they can provide a major leakage path for house air or outdoor air to leak down into a SSD system.

In many cases where a sump is present and where drain tiles empty into the sump, a sump/DTD system will be installed rather than a SSD system. In this case, the sump would necessarily be sealed with an air-tight cover, in the manner described later in Section 5.5, as an inherent part of the sump/DTD system. Where there are no drain tiles entering the sump and no sump pump, the sump pit may be used as a ready-made hole through the slab for a SSD pipe, in which case the sump pit would also be fitted with an air-tight cover as part of the installation of the suction pipe.

In those cases where a sump exists and where SSD suction pipes will be installed independent of the sump, the sump opening must still be fitted with an air-tight cover as shown in Figure 3 and described in Section 5.5.1. Otherwise, a large

US EPA ARCHIVE DOCUMENT

amount of basement air can flow through the sump and drain tiles into the SSD system. If water will enter the sump from on top of the slab, a waterless trap must be installed through the sump cover. If a sump pump is present and if it is not a submersible pump, it must be replaced with a submersible pump.

4.7.5 Intermediate Openings Through the Slab

Slab openings defined here as being "intermediate" should be sealed whenever they are accessible. They are distinguished from the "major" openings discussed previously in that if the intermediate openings are inaccessible and inconvenient to seal, it will be less warranted to incur increased efforts and costs attempting to seal these openings.

Wall/floor joints wider than a hairline crack (but not perimeter channel drains). If the wall/floor joint is wider than a hairline crack (e.g., wider than roughly 1/32 to 1/16 in.), it should be caulked wherever accessible. Because of the nature of this crack, gun-grade (non-flowable) urethane caulk will generally be the best selection. Flowable caulk would tend to puddle on top of the slab, if the crack is narrow; or, it may disappear down under the slab, if the crack is wider but is still too narrow to allow some backer-rod type of support to be stuffed down before caulking.

The wall/floor joint should be wire-brushed to remove deposits and loose concrete, and should be vacuumed before caulking, to try to make the surface as clean as reasonably possible. The bead of gun-grade caulk should then be worked down into the crack to the extent possible.

Even where the entire wall/floor joint is readily accessible, caulking the joint in this manner can add more than $100 to a mitigator's installation cost, depending upon the basement size, the amount of preparation, and labor rates (He91b, He91c).

Gaps around utility pipes penetrating the slab. When utility pipes (e.g., water, sewer, and fuel lines) penetrate a slab, a crack or gap will usually exist between the concrete and the pipe perimeter. Sometimes, the concrete will have been poured flush against the pipe, and only a hairline crack will exist around the perimeter. Other times, a gap will be left around the utility line, often created by a sleeve of metal or packing around the pipe. This gap may be intended to provide subsequent flexibility in mounting a fixture (such as a sink or commode) on top of the pipe, or to protect the pipe when the concrete is poured.

If the gap around the perimeter is more than a hairline (e.g., wider than about 1/32 to 1/16 in.) but not wide enough to stuff down some supporting material, it should caulked with gun-grade urethane caulk, as discussed previously for wall/floor joints. If it is wide enough to accommodate some supporting material, this support should be provided, and flowable urethane caulk should be used. If there is still some packing material around the perimeter of the pipe, between the pipe and the concrete, the top layer of this packing should be scraped away to provide a channel for the caulk. In all cases, the surfaces should be vacuumed and cleaned to provide a reasonably good surface for adhesion of the caulk.

The utility lines usually having the biggest gaps (especially under commodes) will be inaccessible without removing the fixture. Unless communication is poor, SSD systems are usually able to handle air leakage through such gaps sufficiently well. It will probably not be cost-effective in most cases to remove the fixture and seal the gap, in an effort to improve SSD performance. (As discussed previously, these gaps around individual pipes are distinguished from the large holes commonly left around the plumbing for bathtubs, which are considered "major" openings.)

Expansion joints. Sometimes an expansion joint will be installed in a residential slab while the concrete slab is being poured. Expansion joints are strips of asphalt-impregnated compressible fibrous material about 1/2 in. wide. In some regions, they are installed around the perimeter of the slab, at the wall/floor joint, serving as a buffer between the slab and the foundation wall. In other cases, they are installed in the middle of the slab, across the width of the slab (perpendicular to the front and rear walls), often at points where there is a discontinuity in one of the walls. They are referred to as expansion joints because they will compress if the slab ever expanded, thus avoiding cracking from that cause. (In fact, wet concrete will shrink after being poured, and will usually never again reach its "wet" dimensions, except under unusual circumstances.) These joints also serve to isolate one slab segment from another, and may thus sometimes help control slab cracking by permitting independent movement of the segments.

Because the concrete will tend to shrink away from the expansion joint material as it cures, a gap may exist between the material and the adjoining concrete, enabling air leakage down through the joint into the SSD system. This leakage could inhibit the extension of the suction field generated by a SSD pipe from extending across the joint into a neighboring segment of the slab. Leakage through perimeter expansion joints could inhibit the suction field from extending to treat the block foundation walls. Even where there is no visible gap, the expansion joint material will probably not be creating an air-tight seal.

Sealing an expansion joint will be most important when: a) the suction pipe is installed near the joint, since nearby leaks have the greatest impact on suction field extension; b) sub-slab communication is not good, since it is under those conditions that marginal suction field extensions can least tolerate leakage; or c) the gap is wide. Thus, for example, one situation where sealing of expansion joints would likely be important would be the case where there is a perimeter joint, and where poor sub-slab communication encourages location of the suction pipes around the perimeter. Where communication is good, sealing these joints may be less crucial; however, even with good communication, sealing could potentially improve system radon reductions and reduce heat loss. A number of mitigators report that they routinely seal the accessible portions of expansion joints, especially perimeter joints (Br92, Bro92, Kl92).

US EPA ARCHIVE DOCUMENT

One method for sealing an expansion joint would be to route or chip out the top 1/2 in. of expansion joint material, creating a channel along the length of the joint. After the debris is vacuumed up, this channel could then be filled with urethane caulk. Gun-grade (non-flowable) urethane caulk may be the best choice in some cases, since flowable caulk can disappear down into the porous material and any adjacent gaps (Bro92). Chipping out the top of the expansion material can be a time-consuming process, because the material is very pliable. In no case should a channel be created simply by compressing the joint material down, since the material will eventually return to its original shape and dislodge any caulk that had been applied on top of it (Kl92).

To avoid the effort involved in chipping out the top portion of the expansion material, the existing material might simply be trimmed down to the level of the slab using a wire brush or possibly a utility knife (if it extends above the slab). The surfaces would have to be vacuumed to remove debris that might reduce caulk adhesion. Gun-grade urethane would then be spread on top of the existing material without chipping, and worked down into any visible gap. This approach has reportedly worked well with perimeter expansion joints (Kl92). With the perimeter joint, a generous bead of gun-grade caulk is applied over the joint, and is forced down into any gaps around the material and attached to the slab and the wall beside the joint. Although the caulk does not bond well to the joint material itself, it will bond to the slab and wall, encasing the entire joint.

Sometimes expansion joints will be inaccessible. Joints around the perimeter can be concealed behind wall finish. Interior joints, perpendicular to the front and rear walls, will sometimes be concealed under frame walls. It will often not be worthwhile to disrupt the finish attempting to seal the expansion joint, although, as discussed previously, the final decision will depend on the location of the suction pipes, the sub-slab communication, and the width of the gap. If an initial mitigation system is not performing adequately, apparently as the result of an unsealed inaccessible expansion joint, the mitigator will need to consider taking steps to seal the joint or making other system modifications to compensate for the leakage through the unsealed joint.

Other, small slab holes. Occasionally, other small holes will be found through the slab. Such holes might result, for example, where some previously existing slab penetration may have been removed. Where such holes are observed, they should be mortared, foamed, and/or caulked closed.

4.7.6 Openings in Block Foundation Walls

In addition to the openings in the slab, there will also be openings in the foundation walls. Where the walls are hollow block, such air leakage paths into the wall could further reduce the ability of the SSD system to develop a suction field in the walls. The major wall openings which would be considered first for closure would be: the open voids in the top course of block, if there is not a course of solid cap blocks on top; gaps around utility line penetrations through the wall; and missing mortar or defects in the blocks.

As discussed in Sections 2.1, 2.2.1, and 2.3.1, SSD seems to "treat" block foundation walls, in large part, by intercepting soil gas before it enters the void network. It is not clear that SSD often treats the walls by establishing a measurable depressurization or flow inside the wall. Moreover, even when SSD pipes are located near block walls, the depressurizations/flows that would be maintained in the wall by a stand-alone SSD system appear to be very low. Under these conditions, it is unclear how often any practical degree of wall sealing (e.g., sealing of top voids) would have a significant effect, given that significant wall openings will still remain (such as the block pores and mortar joint cracks) which will still provide substantial cumulative leakage area.

Therefore, in cases where sub-slab communication is fairly good and where a stand-alone SSD system (with no BWD component) is expected to do a fairly good job in a given house, it is unclear whether significant improvement in SSD performance will often be achieved by an extensive effort to seal openings in the block foundation wall. Wall sealing will most likely be of significant value with stand-alone SSD systems in cases where sub-slab communication is marginal or poor, and/or where the block walls appear to be a particularly important entry route. Wall sealing can also be important in cases where a BWD component is going to be added to supplement a SSD system, as discussed in Section 7. A BWD component is most likely to be added for the same reasons just stated, namely, poor sub-slab communication and an important wall radon source.

When sub-slab communication is good and a stand-alone SSD system is planned, sealing of the most important wall openings might help to reduce soil gas entry through the walls, even if it does not aid in depressurization of the walls by the SSD system.

If wall sealing is attempted, the most important wall-related opening to close would be the open voids in the top course of block, if there is no course of cap block. The procedures for sealing the top voids and other wall openings are discussed in Section 7.7.1.

4.8 Gauges/Alarms and Labelling

Even where a first-class job has been done in installing a SSD system, the system will not continue to provide low indoor radon levels over the long term unless it is properly maintained by the occupant. Gauges or alarms are required to alert the occupant when the suctions or flows in the system piping fall to unacceptable levels. Labelling advises the homeowner who the installer was (in the event that service is needed), and which switches and circuit breakers control power to the fan. Labelling also indicates which pipes and other elements are components of the system, so that they are recognized by new occupants who may move into the house in the future, and by maintenance personnel. Labelling thus should reduce the risk of the system being inadvertently turned off or damaged by future owners or by service personnel.

US EPA ARCHIVE DOCUMENT

4.8.1 Gauges and Alarms

EPA's interim mitigation standards (EPA91b) require that some type of mechanism or device be installed to monitor system performance and warn of system failure. This warning device must be plainly visible and easy to interpret.

Warning devices are mandatory because there is no other way, other than frequent radon measurements, for homeowners to ensure that the system is continuing to operate properly. It is not sufficient to rely upon the sound of the fan, to reveal if it has stopped operating (or if the bearings are about to fail). Experience has indicated that the electrolytic capacitor in the fan circuitry can fail, causing a dramatic reduction in fan performance; however, the fan can continue to operate at this reduced performance for an extended period, even though the fan would sound as if it were operating normally (Fi91). Moreover, the sound of the fan operation would not reveal the development of system leaks, and reduced suction resulting from increased air flow. And finally, fan operation can be so quiet that a homeowner not paying particular attention to the system might not detect that the system was not operating, even if the fan stopped.

Pressure gauges. Many mitigators install mechanical gauges which measure suction in the SSD piping upstream of the fan. Such gauges display the system suction, often in quantitative units of measure. In some devices, the reading is semi-quantitative, as discussed below. As the term is used here, a "gauge" does not inherently incorporate a visual or auditory alarm to alert the occupant when suctions move outside the acceptable range; thus, gauges rely upon the occupant to take the initiative to read them. However, a gauge could be used in conjunction with an alarm, discussed later under *Pressure-activated alarms.*

Pressure gauges are mounted on the piping leading to the fan as one of the last steps in the installation process, as the mitigator is confirming that proper suctions are being established the system. The gauge must be marked to indicate the expected range of suctions that the system should maintain during typical operation, so that the occupant can readily tell when the system is outside its normal operating range.

The exact values for the upper and lower suctions which define the "typical" range for a given system will depend upon the following factors: the performance curve of the system fan; the flow characteristics of the sub-slab region; and the nature of the SSD piping network (i.e., the suction loss in the piping). This last factor can also be taken to include where the gauge is mounted on the piping network, since a gauge mounted near the fan may measure a much higher suction than a gauge mounted near the slab remote from the fan. See Sections 4.4 and 4.6.1 for further discussion of the suctions that may be expected with different fans, flow rates, and piping configurations. The actual "normal operating range" to be marked on the gauge for a given installation will be determined in large part by the post-mitigation system suction and flow measurements that the mitigator makes in the system piping immediately following installation (see Section 11.3).

The occupant must be advised that a decrease in the suction below the minimum level could indicate a problem such as fan failure or leaks in the system piping, that must be corrected if the system is to continue to reduce radon levels adequately. Likewise, an increase above the estimated maximum could indicate a problem such as blockage of the piping.

Pressure gauges should be mounted in the piping relatively near to the point where the suction pipe penetrates the slab, since this will tend to provide the best measure of the suction that is being maintained in the sub-slab pit. If the gauge were mounted near the fan and if the fan were remote from the slab penetration, the gauge readings would be strongly influenced by the fan and could tend to remain high. For example, if a leak developed near the slab penetration, this leak could significantly reduce sub-slab suction. However, the increased system flows resulting from this leak would increase the pressure drop through the piping, so that the suction near the fan might be affected much more modestly. Suction near the fan could remain within the normal operating range marked on the gauge, even though sub-slab suctions may potentially have dropped below the acceptable level.

While some types of gauges can be mounted directly on the suction piping, some gauges are sometimes or always mounted on a wall a short distance from the SSD suction piping, and are connected to the piping by a length of 1/8-in. diameter flexible tubing. The gauge should be mounted at a location such that the entire length of this tubing remains inside the basement or living area. Some mitigators have reported that when this narrow tubing extends outside the living envelope. e.g., to outdoor piping associated with an exterior stack or to piping in an attic, moisture can condense inside the tubing (An92, Kl92). This condensate will block the connection between the gauge and the suction pipe, causing the gauge to give a reading of zero suction, incorrectly suggesting a problem with the SSD system.

Several types of pressure gauges are in common use, having the sensitivity required to measure suctions in the range commonly seen in SSD piping.

- *Magnehelic® gauge.* Dwyer Magnehelic® gauges, which commonly cost about $40-$55 (He91b, He91c), are the most expensive gauge. However, they are easy to read and can be mounted directly on the suction pipe if desired. Whether mounted on the pipe or on a nearby wall, it is connected to the pipe by narrow tubing which extends from a fitting on the gauge to a hole in the pipe. Magnehelic gauges can measure suctions up to 0.5 to 2 in. WG, and even up to 50 in. WG, depending upon the particular gauge; the most sensitive gauge has a sensitivity of about $\pm$ 0.01 in. WG.

- *Curved inclined manometer.* Somewhat more sensitive than the U-tube manometer at low suctions, the inclined manometer has the disadvantage that it cannot be mounted directly on the SSD pipe. It must be mounted on a flat surface (such as a wall) nearby, and is connected to the pipe by tubing. An inclined manometer may also have to be re-zeroed periodically (Bro92). Inclined manometers commonly sell for about $18-$25. One typical inclined

manometer on the market can measure suctions up to 3 in. WG, with a sensitivity of roughly 0.02 to 0.1 in. WG at suctions below 1 in. WG.

- *U-tube manometer.* The U-tube manometer is the least expensive device, costing $8-$15. It can be mounted directly on the vertical SSD suction pipe, although mounting on a nearby wall would provide a more secure location. In either case, a length of flexible tubing would connect the manometer to a hole in the pipe. One typical U-tube manometer on the market can measure suctions up to 4 in. WG, with a sensitivity of 0.1 in. WG.

- *Floating-ball device.* One vendor markets a device which attaches directly to the side of the suction pipe. A stream of house air is drawn up through the device into a small hole drilled in the side of the SSD pipe. When the homeowner places a finger over the inlet hole for house air flow into the device, the suction in the pipe causes a ball within the device to float upward, either to the "green" zone (fan operating properly) or the "red" zone (maintenance required). This device, which is less quantitative than the others, markets for about $10-$20. A number of mitigators have reported problems with this device, due to difficulties in ensuring proper movement of the floating ball and difficulties in seeing the ball.

Ammeter (measuring current to fan). One vendor markets a gauge which, rather than measuring system suction, measures the current being drawn by the fan as a surrogate for suction. This gauge utilizes the principle that, based upon the fan performance curve and the fan motor performance, the power being drawn by the motor increase as the air flow being moved by the fan increases.

This qualitative gauge, which is mounted on a wall, is placed in the wiring leading to the fan. A needle on the gauge indicates whether the fan is drawing current within an acceptable (green) range, or whether current has dropped or risen into an unacceptable (red) range. The gauge does not provide a quantitative measure of the actual amperes being drawn.

The acceptable value of the current is set by the mitigator immediately after installation, based upon the current being drawn by the fan after the system has been adjusted to give satisfactory performance.

This ammeter gauge has been illustrated previously in Section 4.6.4, in connection with Figure 25B.

Pressure-activated alarms. In addition to suction gauges, discussed above, there are also alarms on the market which provide a visual and/or and audible signal that comes on if suction drops below a pre-set value. These alarms are also referred to as pressure switches. Unlike gauges, alarms do not provide a continuous measure of the suction that exists in the piping. Rather, they only indicate when the suction falls below the acceptable minimum set by the mitigator. Also unlike gauges, alarms/switches only indicate when suction has fallen unacceptably (e.g., due to fan failure or development of a piping leak); they will not indicate when suction has risen unacceptably (e.g., due to pipe blockage).

Alarms may be used in combination with one of the gauges listed above, or may stand alone with no gauge. Gauges (including gauges combined with a visual or audible alarm) are preferred over alarms alone. The gauge provides a continuous, often quantitative measurement of how system suction may be changing. Many alarms cost more than the most expensive gauges.

Visual and audible alarms require a power source. They must be plugged or wired into a house circuit different from the one into which the fan is wired, so that failure of the fan circuit (e.g., tripping of the circuit breaker) would not simultaneously disable the alarm. The alarm should be plugged into a circuit without a switch that can be turned off by the occupant. Alarms should automatically reset when power is restored after service or after a power supply failure. According to the current draft of EPA's final Radon Mitigation Standards, battery-powered alarms would be unacceptable unless they are equipped with a low-power warning feature, since the occupant might forget to consistently replace the batteries at the required intervals over the years.

Where a gauge has not been installed along with the alarm, it is recommended that the alarm have a light (e.g., a green light) which remains on continuously while the fan is operating properly, confirming that the alarm is functional. Audible alarms should be wired so that they can be turned off by the homeowner after indicating a problem with the SSD system.

Like pressure gauges, pressure-activated alarms should be mounted on the suction pipe toward its penetration through the slab.

Location of gauges and alarms. Gauges and visual alarms should be mounted in a location frequented by the occupants on a regular basis. They should not be mounted in closets unless this is unavoidable. Where the gauge or alarm must be placed in such a location, the gauge or visual alarm should be in combination with an audible alarm.

As discussed previously for gauges and alarms which measure system suction, the gauges or alarm should be mounted near the point where the SSD suction pipe penetrates the slab.

4.8.2 System Labelling

In accordance with EPA's interim mitigation standards (EPA91b), all components of the SSD system should be labelled, to avoid inadvertent disabling of the system by future owners/occupants of the house or by service personnel.

A label should be posted at a central location on the mitigation system, or on the electric panel or other prominent location, including a system description, and including the name and telephone number to contact if a problem arises with the system. It is also recommended in the current draft of EPA's final Radon Mitigation Standards that this label also include the date of installation and an advisory to re-test the house for radon every 2 years. This label should be legible from a distance of at least 2 ft.

US EPA ARCHIVE DOCUMENT

Any electric switch controlling power to the SSD fan must be labelled. If the fan or any electrically powered alarm is plugged into an outlet, this outlet is considered a switch and should be labelled. Also, the circuit breaker switch or the fuse should be labelled at the breaker or fuse box, indicating the circuit into which the fan has been wired, and the circuit into which any electrically powered alarm has been wired. Such labelling should help prevent homeowners from inadvertently turning off the fan or the alarm at the box.

Visible portions of the system, including the fan and interior piping, should be labelled at at least one location on each story of the house. The labels should read, "Radon Reduction System."

US EPA ARCHIVE DOCUMENT

US EPA ARCHIVE DOCUMENT

Section 5
Design and Installation of Active Drain-Tile Depressurization Systems (Sump Depressurization)

Where a sump with drain tiles exists in a basement house, sump/DTD will commonly (but not always) be the ASD variation selected for installation, rather than SSD. The drain tiles provide an in-place network to aid in distribution of the suction field, usually around the slab perimeter. Distribution of the suction around the perimeter should help ensure effective treatment of the wall/floor joint, often one of the most important radon entry routes. In addition, if the suction pipe is installed in the sump, the sump pit provides a ready-made hole through the slab for the suction pipe.

One typical configuration of a sump/DTD system is illustrated in Figure 3.

Commonly, the drain tiles emptying into sumps form a complete or partial interior loop, inside the footings beneath the slab. Sometimes, sumps will have exterior drain tiles, forming a complete or partial loop around the outside of the footings. If sub-slab communication is good, sump/DTD will often perform very well: a) with interior tiles, even if the tiles form only a partial loop; or b) with exterior tiles, if the tiles form a complete or largely complete loop (i.e., around at least three sides of the house). If communication is marginal or poor, sump/DTD will likely perform best as a stand-alone system with interior tiles forming a complete loop. With marginal/poor communication, sump/DTD may also perform well with nearly complete *exterior* loops, if there is not a major soil gas entry route toward the interior of the slab (such as a block fireplace structure penetrating the slab).

Under conditions other than those listed above, sump/DTD may sometimes have to be supplemented by SSD suction pipes. These other conditions include: a) marginal/poor communication, partial interior loop; b) good communication, partial exterior loop; and c) marginal/poor communication, partial exterior loop. However, good performance has sometimes been reported with DTD/remote discharge even under some of these less favorable conditions. One mitigator reports achieving reasonable performance with partial exterior loops around basements having no sub-slab aggregate, apparently due to reasonably good permeability in the underlying soil (Kl92).

Occasionally, sump pits will be encountered that do not have drain tiles emptying into them. Where such sump pits open to the sub-slab fill, these sumps can be capped and suction drawn on them as discussed in Section 5.5.2, utilizing them as a ready-made hole through the slab. However, as discussed in Section 4.5.3, such an installation would actually be a variation of SSD, and would not be sump/DTD.

Many of the details involved in designing and installing sump/DTD systems are similar those for SSD systems, discussed in Section 4. Thus, the discussion in Section 5 will often refer to the previous section. The discussion in this section will focus on those design and installation features unique to sump/DTD.

The discussion in this section draws heavily from the detailed review of available data on active sump/DTD systems, presented in Section 2.3.2.

5.1 Selection of the Number of Suction Pipes: Need for a SSD Component to Sump/DTD System

Often, sump/DTD systems will not need to be supplemented by a SSD component. That is, suction on the drain tiles alone will be sufficient, and it will not be necessary to install additional suction pipes into the sub-slab region at locations remote from the drain tiles. In these cases, one pipe, drawing suction on the drain tiles at the sump or at any other convenient location, will generally be sufficient. The tiles should effectively distribute the suction along their entire length.

More than one pipe could be needed to draw suction on the drain tiles in cases where a portion of the drain tile loop is isolated from the remainder of the loop, as a result of physical damage or of silting. In such cases, a separate pipe could be needed to treat each isolated segment, if treatment of only one segment fails to provide sufficient radon reductions. In practice, it would usually be difficult to ascertain that some particular segment is thus isolated.

If suction on the drain tiles creates flows so high that adequate suction cannot be maintained in the piping or under the slab, the answer will almost never be to install a second suction pipe into the drain tile loop (and/or additional fan capacity) in an effort to handle these flows. Rather, the answer will usually be to conduct additional sealing as necessary to reduce air leakage into the system, as discussed in Section 5.7. In summary, there will rarely be occasions in practice when a second suction pipe will be tapped into the drain tile network.

One of the more common situations under which a SSD suction pipe will be required in addition to the sump/DTD suction pipe, will be the case where the SSD pipe is needed to treat a slab-on-grade wing which adjoins the basement with the sump. The drain tiles entering the sump often loop only around the basement footings, so that suction on the sump alone may not directly treat the adjoining slab. (There are cases, usually with exterior loops, where the tiles will extend around the slab on grade as well as the basement; in that case, suction on the tiles at one location should treat both slabs directly.)

Where the tiles loop only around the basement, then, as discussed in Section 4.1, it is generally advisable to install a SSD pipe under the adjoining slab on grade, since that step usually appears to improve radon reductions, especially in the living area on the adjoining slab. Where the tiles loop only around the basement, installing the SSD pipe under the adjoining slab is most important in cases where the communication beneath the basement slab is marginal or poor, or where the radon source term is high. In those cases, it will sometimes not be possible to reduce the living area on the adjoining slab below 4 pCi/L without a pipe treating that slab directly. Where communication beneath the basement slab is good and the source term not particularly high, sump/DTD in the basement alone is more likely to reduce the entire house below 4 pCi/L; however, even in this case, a SSD pipe beneath the adjoining slab will usually still provide additional reductions. The SSD pipe beneath the adjoining slab will usually be installed from inside the basement, as discussed in Section 4.5.5, and manifolded into the sump/DTD piping, leading to a single fan.

Sometimes, SSD pipes will be needed to help treat the *basement* slab, supplementing the sump/DTD system. As listed previously, such supplemental basement SSD pipes will most likely (but will not always) be needed under the following sets of conditions: a) marginal/poor sub-slab communication, partial interior loop (i.e., on less than three sides of the house); b) good sub-slab communication, partial exterior loop, low permeability in native soil; and c) marginal/poor communication, partial exterior loop, low soil permeability. Supplemental SSD pipes may sometimes also be necessary with complete exterior loops, if communication is marginal/poor, if the soil permeability is low, and if there is a major entry route toward the slab interior. The pre-mitigation diagnostics can sometimes help to foresee the need for supplemental SSD pipes, by suggesting the nature of the drain tile loop or by identifying the sub-slab communication.

Inspection of the sump during the visual survey, together with knowledge of construction practices in the area, with any available construction plans, and with observations by the homeowner during construction, can help suggest the nature of the tiles. For example, two tiles entering the sump at 90° angles, parallel to the perimeter walls at the corner where the sump is located, would suggest (but not prove) the presence of a complete interior loop. A single tile penetrating into the sump parallel to a foundation wall would suggest that the tiles are inside the footing, but could be suggesting that a complete loop may be less likely. A single tile penetrating the sump perpendicular to the adjoining foundation wall could suggest an exterior loop. Where the ultimate direction of the tiles is ambiguous, the tiles might be probed by inserting a plumber's snake from inside the sump, to determine changes in direction near the sump. It is difficult to confirm the extent of the loop (i.e., complete or partial) unless the homeowner observed the installation of the tiles when the house was under construction, or unless this is known from *as-built* construction drawings or from established practices of the particular builder.

If the basement sub-slab communication is not apparent from observed aggregate under the slab (e.g., around the tile penetrations through the sump wall) or from experience with construction practices in the area, qualitative suction field extension testing with the diagnostic vacuum cleaner could be conducted, as discussed in Section 3.3.1. The problem is that, unless it is known where the tile loop may be incomplete, this communication information will not give definitive guidance regarding how many supplemental SSD pipes are needed, and exactly where they should be installed. Accordingly, rather than doing pre-mitigation suction field extension measurements, it may often be most cost-effective to simply install the sump/DTD system, and to then determine the appropriate number and location of supplemental SSD pipes (if any turn out to be necessary) from sub-slab suction field measurements with the system operating.

If any SSD pipes turn out to be needed in the basement slab, supplementing the sump/DTD system, the SSD component of the system would be designed and installed as described in Section 4. Any SSD pipes would commonly be manifolded into the sump/DTD system piping, leading to a single fan.

5.2 Selection of DTD Suction Pipe Location: At Sump or Remote

The pipe to draw suction on the drain tiles can be installed into the drain tile loop at any location around the loop. Often, the suction pipe is installed remote from the capped sump, as in Figure 3. Sometimes, the pipe is installed at the sump, through the sump cover.

Some mitigators prefer to install the suction pipe into the tiles remote from the sump, for several reasons. A primary reason is to simplify subsequent maintenance on the sump pump or inspection of the sump if water drainage problems occur (Sh91, Br92, Bro92, Kl92). Having the suction pipe away from the sump cover not only simplifies the removal of the sump cover, but it also reduces the risk that the pipe penetration through the cover will not be properly resealed by the pump repairman or homeowner after the maintenance is done.

A related advantage of installing the suction pipe at a remote location is that any subsequent leaks that develop in the sump cover would have a less significant effect on sump/DTD system performance. The sump cover is the location where leaks are most prone to occur. As mentioned above, leaks could develop during subsequent sump maintenance, if the owner or service personnel do not reseal the cover or some of the cover penetrations adequately after inspections or repairs are completed. Leaks could also develop if any of the seals break over time, or if a water trap through the cover dries out. On this basis, it would theoretically be desirable to tap into the

US EPA ARCHIVE DOCUMENT

drain tiles as far away from the sump as possible. House air leaking into the sump would then suffer a significant suction loss in flowing through the drain tile loop over to the suction pipe, especially in view of the wall friction created by the corrugations in the flexible corrugated drain tiles. As a result, the suction at the sump would be reduced (reducing the air flow through the sump leaks), and sufficient suctions might be maintained at other locations in the loop such that the system could still be effective.

Another reason for tapping into the tiles at a location remote from the sump could be to facilitate routing of the exhaust stack. For example, if the sump were on the opposite end of the basement from an adjoining slab-on-grade garage, one might elect to tap into the tiles at the opposite end of the basement, beside the wall adjoining the garage, so that the exhaust piping could conveniently be routed up through the garage, with the fan in the garage and the exhaust penetrating the garage roof.

Where an exterior loop of tiles connects into the sump, a further advantage to remote installation of the suction pipe is that all of the piping will then be outside the house. This can sometimes be desirable for aesthetic reasons.

Of course, tapping into the tiles remote from the sump requires that the configuration of the tiles be known (e.g., it is known that they form a complete interior loop). This is necessary so that the mitigator is able to core a hole through the slab at a remote location, with reasonable certainty that the tiles will be approximately underneath.

If the DTD suction pipe is installed through the slab to tap into the drain tiles remote from the sump, the sump must still be capped with an air-tight cover. Otherwise, basement air would be drawn down into the sump and through the tiles, dramatically reducing system suctions and performance, increasing the house heating/cooling penalty, and increasing the risk of combustion appliance backdrafting.

The prior discussion focuses on installation of the suction pipe remote from the sump. However, many mitigators routinely install the pipe through the sump cover. Even mitigators who commonly install the pipe remote from the sump sometimes find it desirable to install the pipe through the cover for one reason or another. Certainly, installation through the cover is simpler than remote installation, since it avoids the need to core through the slab or excavate outdoors to expose the tiles at a remote location. Installation of the suction pipe through the sump is a reasonable as well as common approach. However, as discussed in Section 5.5.2, this installation must be done in a manner which facilitates subsequent access to the sump for maintenance.

The preceding discussion has addressed the location of the suction pipe which is used to draw suction on the drain tiles (the *DTD* suction pipe). In those cases where supplemental SSD suction pipes also turn out to be required, the location of the SSD pipe(s) would be selected as discussed in Section 5.1.

5.3 Selection of Suction Pipe Type and Diameter

The considerations in selecting the type of suction pipe (usually either lightweight or Schedule 40 PVC, PE, or ABS piping) are the same for sump/DTD systems as those discussed in Section 4.3.1 for SSD systems. Where the suction pipe taps into an exterior drain tile loop remote from the sump, in which case the piping will necessarily be outdoors, the piping should be Schedule 40, coated with paint or a UV protectant, for improved UV resistance.

Regarding the diameter of the piping, 4-in. diameter piping is typically used in sump/DTD systems. Sump/DTD systems tend to have flow rates somewhat higher than those in SSD systems (commonly 50-150 cfm with the 90-watt in-line tubular fans, compared to 20-100+ cfm in SSD systems). The higher flows in sump/DTD systems probably result from more air leakage into the system through the wall/floor joint and through block foundation walls, since suction is being drawn immediately beside the entire perimeter. Perhaps there is also some leakage associated with the sump cover. Where the tiles are outside the footings, some of the air might also be outdoor air drawn down through the soil from grade, especially when some portion of the tiles are at a relatively shallow depth.

Because of these higher flows, 4-in. diameter piping will often be preferred for sump/DTD systems. Even at the lowest commonly-observed flow rate of 50 cfm, the flow velocity in 3-in. piping would be about 1,000 ft/min, the value at which flow noise can start to become objectionable. Even with the 4-in. piping, flow noise could become objectionable at 90 to 130 cfm, in the middle to upper flow range for sump/DTD.

The example system considered in Section 4.3.2 had an equivalent piping length of 70 ft, consisting of 35 linear ft of straight piping and two mitered 90° elbows. Referring to the friction loss curves in Figure 13, the higher flows seen in sump/DTD systems (100 to 150 cfm) would result in a friction loss of 0.4 to 1.0 in. WG if this example system consisted of 4-in. piping, a loss that could be handled by the 90-watt in-line tubular fans discussed in Section 4.4.1. However, if the piping were 3 in. diameter, the suction loss would be 1.6 to 4 in. WG, a loss that would challenge even the in-line radial blowers discussed in Section 4.4.2. If a length of 3-in. piping had to be used with a sump/DTD system in order to fit the piping into existing space constraints (e.g., inside stud walls), it would seem desirable to limit the length of the narrower piping to the extent possible.

But having said this, it must be recognized that if the 3-in. piping were used in the example system, and if suction losses as calculated above became too high for the fan to handle, the system flows would drop, and the fan would operate at a different point on its performance curve. Suctions in the drain tiles would thus also necessarily drop. The lower flows would also mean lower velocities and hence reduced flow noise. In view of the common effectiveness of sump/DTD systems, especially when sub-slab aggregate is present, such a reduction in flows and suction may not always result in a serious degradation in system performance. Thus, the use of 3-in. piping may not in fact always be a serious problem. Neverthe-

US EPA ARCHIVE DOCUMENT

less, it would still seem desirable to use 4-in. piping where possible.

In view of the above discussion, the use of 6-in. piping in an attempt to reduce suction loss is probably not warranted in most cases. Where the sub-slab characteristics are such that sump/DTD flows are toward the lower end of the range, the standard in-line tubular fans will be able to handle the suction loss in 4-in. piping. Where flows tend toward the upper end of the range, any reduction in system flows and in drain tile suctions resulting from the use of 4-in. rather than 6-in. piping will probably often not create a serious degradation in system performance, even with the standard fans. Six-inch piping might be considered in occasional cases where flow noise in narrower pipe becomes objectionable.

5.4 Selection of Suction Fan

Since the flows from sump/DTD systems tend to be relatively high, the 90-watt in-line tubular fans discussed in Section 4.4.1 will usually be the best choice. At the flows typically maintained by sump/DTD systems with the 90-watt fans (50-150 cfm), these fans can commonly establish suctions of about 0.75-1.0 in. WG in the system piping, based upon the published fan performance curves. As discussed previously, this suction will usually be sufficient to handle friction losses that will occur in 4-in. diameter piping at those flow rates.

Some mitigators find that, under best-case conditions (a complete interior drain tile loop and good sub-slab communication), the smaller 50-watt in-line tubular fans are sufficient for sump/DTD systems. These fans will draw smaller flows and will maintain somewhat lower system suctions. Because of their lower flows, they will also sustain less friction loss through the piping, which will partially compensate for the lower system suctions. In areas where effective long-term performance has been demonstrated with the 50-watt fans, these fans can be considered for best-case sump/DTD systems. However, in other cases, selection of a 90-watt fan will provide the best assurance that effective performance will be maintained over the range of conditions that the system is likely to encounter over time.

The in-line radial blowers discussed in Section 4.4.2 could also be considered for use on sump/DTD systems. However, at the relatively high flows in these systems, the higher suction capabilities of the radial blowers would not be utilized, and they would be an unnecessary investment.

Because of the relatively high flows usually encountered with sump/DTD systems, the high-suction/low-flow fans discussed in Section 4.4.3 for SSD systems in low-flow houses will essentially never be suitable for sump/DTD installations.

5.5 Installation of a Suction Pipe into the Drain Tile Loop

As indicated previously, suction can be drawn on the drain tiles in one of two alternative ways. The suction pipe can be installed into the tiles at some point remote from the sump; or, the pipe can be installed through the sump cover.

5.5.1 Suction Drawn on Tiles Remote from Sump

Where the likely configuration of the drain tiles can be estimated fairly reliably (e.g., based upon common house construction characteristics in the area), it can be beneficial to draw suction on the tiles at some location remote from the sump. While installation of the pipe remote from the sump will make the installation slightly more difficult, remote installation offers the benefits of facilitating subsequent sump pump inspection and maintenance and of sometimes facilitating the routing of the exhaust piping, among other possible benefits.

Interior tile loops—connecting the remote suction pipe (indirect approach). Where the tiles are thought to form a complete loop inside the footings, beneath the basement slab, a hole through the slab is created through the slab near the foundation wall at the point at which it is desired to install the suction pipe. The hole is made directly over the estimated position of the drain tile. Since the tile will usually not turn out to be exactly beneath the slab hole, some exploratory excavation by hand through the hole will be required in order to locate the tile.

Commonly, the hole through the slab will be a 5- to 6-in. diameter hole prepared using a rotary hammer, or using a coring drill, as described in Section 4.5.1 (see *Drilling the hole through the slab)* for vertical interior SSD pipes. When the drain tile is located by excavation beneath this hole, a hole through the wall of the tile is made, as illustrated in Figure 3. This procedure results in a hand-excavated pit beneath the slab, as discussed in Section 4.5.1, with the tile loop now opening into this pit. The pit should be excavated to some depth below the drain tile, and to some distance to the right and left of the hole that has been created in the tile wall, in an effort to avoid the tile becoming silted shut or otherwise plugged by sub-slab fill or soil entering the hole that has been created in the tile (e.g., due to settling or water movement). The suction pipe is then sealed into this slab hole, exactly as described in Section 4.5.1 for a vertical SSD pipe (see *Mounting suction pipes through the slab,* and Figures 14 and 15). The only difference is that, now, this pipe is in fact a DTD pipe (at least in part), since its suction is extending through the sub-slab pit into the drain tile loop.

Interior tile loops—connecting the remote suction pipe (direct approach). With the configuration described above and shown in Figure 3, the suction pipe does not physically connect to the drain tile. Depending upon how accurately (or inaccurately) the mitigator guessed the location of the tile when the slab hole was drilled, the suction pipe may, in fact, be several inches away from the drain tile. Where the drain tiles are inside the footings, and especially where sub-slab communication is good, a physical connection is probably not necessary. However, where sub-slab communication is poor, it may become more important to connect the suction pipe directly into the tiles, to ensure most effective distribution of the suction through the tiles.

If a better connection is desired, the suction pipe can be inserted directly into the drain tiles. One approach for accom-

US EPA ARCHIVE DOCUMENT

plishing this would be to install a PVC "T" fitting into the drain tiles with the leg extending upward. The suction pipe would then be cemented into this upward leg.

To install a T, a second hole may have to be made through the slab directly over the tile, once the tile has been located by the initial exploratory excavation, if the first hole was not directly over the tile. This second hole would have to be 6 in. or greater in diameter, large enough to accommodate the T fitting. A pit would be excavated beneath this second slab hole as necessary to expose the tile. A small section of the tile would be cut out, so that the fitting can be inserted into the tile. The T fitting would then be fit into this hole in an inverted fashion, so that the two ends of the top of the T can be connected to the two opened ends of the drain tile, and so that the leg of the T is protruding straight upward through the slab hole. Each of the cut ends of the tile would connected to the top of the T. If the drain tiles are rigid perforated ABS or PVC, the ends of the T might be connected using straight flexible black PVC couplings, similar to those described in Section 4.6.4 for mounting fans. Hose clamps might be used to connect the couplings to the T and the drain tiles. If the drain tiles are flexible corrugated black polyethylene or polypropylene, the tile might be connected to the ends of the rigid T using hose clamps, or using screws and urethane caulk.

When the drain tile is the flexible corrugated material, one mitigator suggests fabricating a saddle out of a flexible corrugated T fitting, rather than using a rigid PVC T (KI92). This saddle would be cemented over a hole on the top of the drain tile. This approach is further discussed in Section 6.5.

Once the suction pipe has been connected to the drain tiles with the rigid or flexible T fitting, the slab penetration must be sealed. If the slab hole was only about 6 in. diameter, the sealing might be accomplished by stuffing some support material (such as backer rod or foam) into the annulus between the pipe and the side of the slab, and filling the remaining channel above the support with urethane caulk and/or mortar, analogous to the options shown in Figure 14. If a hole much larger than that had to be made in the slab, it could be desirable (and the suction pipe would have more lateral support) if the pit were filled with crushed rock and the slab restored with mortar. Channels would be tooled around the outer perimeter of the new mortar patch, and at the juncture between the mortar and the suction pipe; these channels would be filled with flowable urethane after the mortar had set.

Interior tile loops—supporting the remote suction pipe. When the remote suction pipe is connected to an interior loop using the so-called indirect approach above, the pipe may be supported at the slab, if the pipe is mounted using one of the techniques illustrated in Figure 15 (or an equivalent technique). If the pipe is not supported at the slab, it can be supported overhead using, e.g., one of the methods illustrated in Figure 16 or 17.

Since an interior drain tile loop will usually be within about 6 in. of a perimeter foundation wall, a mitigator could also choose to offset the suction pipe against the wall by connecting a pair of 45° elbows to the pipe where it comes up out of the slab. The riser could then be attached to the perimeter wall using, e.g., one of the methods shown in Figure 29 for attaching an exterior stack to the side of a house.

When the remote suction pipe is connected to an interior loop using the so-called direct approach above, the pipe will be supported beneath the slab if an inverted rigid PVC T fitting is used. The T will be resting on the soil beneath. If a flexible corrugated saddle fitting is used, according to the second direct option above, the suction pipe would not be supported beneath the slab, and would have to be supported overhead in some manner.

Exterior tile loops—connecting the remote suction pipe. The above discussion focuses on the case where the tiles are beneath the slab, inside the footings. If the tiles draining into the sump were outside the footings, it would be possible to tap into the tiles outdoors. This outdoor connection would be made in a manner similar to that described in Section 6.5 (and illustrated in Figure 4) for the DTD/remote discharge case. The difference would be that, in the sump/DTD case, the connection would necessarily always be in the tile loop itself. Unlike the DTD/remote discharge example in Figure 4, there would be no discharge line to a dry well or above-grade discharge point.

Capping the sump. Even when the suction is drawn on the tiles remote from the sump, the sump should be capped with a cover that is largely air-tight, to avoid excessive flow of house air into the sump/DTD system. The sump cover would be installed as described in Section 5.5.2 (and as illustrated in Figures 3 and 33), except that the PVC suction pipe would not penetrate the sump cover. As discussed in Section 5.5.2, this cover must be attached over the sump in a manner which will facilitate its removal and replacement during sump maintenance.

As part of capping the sump, a check valve should be inserted in the water discharge line running from the sump pump. Otherwise, outdoor air could be drawn through the water pipe and pump into the sump/DTD system, reducing the suction field that can be established by the system.

Efforts to carefully seal the sump become somewhat less critical when suction is drawn remote from the sump, since leaks at the sump will have a less dramatic effect on sump/DTD performance under that condition. However, significant sump leaks could still degrade system performance. Thus, the mitigator is well advised to seal the sump carefully, even in cases where suction is drawn remote from the sump.

5.5.2 Suction Drawn on Capped Sump

The other common method for drawing suction on the drain tiles is to insert the suction pipe through the air-tight cover over the sump. When suction is drawn directly on the sump in this manner, it is increasingly important that the sump cover remain largely air-tight; leaks in the cover could result in substantial short-circuiting of house air into the system, reducing system performance.

US EPA ARCHIVE DOCUMENT

Design of sump covers—general. Figure 3 illustrates one common sump cover design, a flat circular disk which rests on top of the slab around the sump hole. While that figure shows the suction being drawn remote from the sump, the same cover design could be considered when suction is drawn at the sump. Some other sump covers are illustrated in Figure 33; these covers are all illustrated for the case where suction is being drawn at the sump.

Pre-fabricated sump covers of the type illustrated in Figures 3 and 33 can be purchased. These pre-fabricated covers are circular disks of a diameter adequate to rest on the lip of the sump liner (if this lip is exposed), or on top of the slab around the sump hole. They are commonly fabricated out of materials such as molded polyurethane, molded polypropylene, molded ABS, or 1/4- to 1/2-in. thick sheets of hard clear plastic or Lucite.

Mitigators can fabricate covers such as those in Figures 3, 33A, and 33B out of sheets of hard plastic or Lucite, or from sheet metal. It is recommended that the covers be strong enough to support the weight of a person without breaking, to reduce the risk of damage to the cover by the house occupants and by service personnel.

Where suction is to be drawn at the sump, the sump covers must have at least two to three penetrations: one (about 4.5 in. diameter) for the suction pipe; one (1 to 2 in. diameter) for the water discharge line from the sump pump; and one for the electrical connection to the sump pump. Sometimes the pump discharge line and the electrical connection pass through a single hole, reducing the number of holes from three to two. When suction is to be drawn on the drain tiles *remote* from the sump, as discussed in Section 5.5.1, the hole for the suction pipe would not be needed.

Another opening would be required for a waterless trap as shown in Figures 33A and 33B, if water is expected from on top of the slab (discussed later). Additional openings would be required if specific drain lines (such as an air conditioner condensate drain) were to be installed through the cover. Such additional openings should be minimized, to avoid complications with maintaining the cover's seal over time (e.g., as cover removal and resealing are required to permit pump maintenance). As discussed later, all of these penetrations must be effectively sealed when the cover is installed.

Fabrication of the cover out of some transparent material such as Lucite or Plexiglass will facilitate subsequent viewing of the pump and the water level in the sump by the home-owner. A number of non-transparent covers on the market, such as that in Figure 33C, include a clear pump viewing window in the cover to permit such inspection. Such a window sometimes also serves as an access door, through which service personnel could gain limited access to the pump (e.g., for flipping the switch on the pump) without removing the sump cover and thus without breaking the seals around the cover perimeter and around the various cover penetrations (Mes91, Bro92). Such a door would be screwed onto the cover with a gasket to provide a seal.

Design of sump covers to accommodate water from on top of the slab. When water is expected to enter the sump from on top of the slab (e.g., from air conditioner condensate drains or sink overflows), provisions must be made to permit this water to pass through the cover from on top. Where this water is from a specific source such as an air conditioner condensate drain, one option would be to install a permanent penetration through the cover for this drain line. However, for cases where the water will be flowing over the top of the slab (such as from an overflowing sink), the best approach is to install a trap through the cover.

If the water flow is frequent enough such that a standard "P" trap will remain full of water, such a standard water trap can be installed. However, in cases where the flow will be infrequent or uncertain, such a trap could dry out, unless the homeowner consistently added water to the trap. It would be unwise to rely upon the homeowner remembering to continually add water over the years. If the trap dried out, this would create an opening through the cover which could dramatically reduce the effectiveness of the cover's seal, and thus significantly reduce the effectiveness of the sump/DTD system, especially when suction is being drawn at the sump. Accordingly, as a general procedure, it would be advisable in such cases to install a "waterless" trap through the cover (e.g., as illustrated in Figure 32B). As discussed in Section 4.7.3, when water is not flowing through the waterless traps, a weighted ball or ring seats in the trap opening, ensuring that the trap is closed even if the water dries out.

Where water is expected to enter the sump from on top of the slab, it would be preferable for the cover to be recessed below the top of the slab, if possible, thus forming a depression over the sump which will aid in the collection of water at that location. Alternatives for recessing the cover in that manner are illustrated in Figures 33A and 33B.

In some cases, there is a sump liner insert forming the walls (and perhaps the bottom) of the sump, and the top of this liner ends at a level below the top of the slab. In this configuration, the liner creates a lip around the circumference of the sump hole just below the top of the slab. This lip provides an ideal support for a flat circular cover of the type described above, as illustrated in Figure 33A. Where such a lip does not exist, some investigators have suggested that one be created by attaching strips of wood to the inside of the liner just below the top of the sump (Br92).

Alternatively, when there is no lip, the cover can be designed to be recessed while still being supported by the top of the slab. A design to provide a recessed cover in such cases is illustrated in Figure 33B. A few pre-fabricated molded plastic covers have been marketed in the general configuration shown in Figure 33B. Alternatively, such a cover might be fabricated by the mitigator out of sheet metal.

If the cover cannot conveniently be recessed as shown in Figure 33A or 33B, a flat cover on top of the slab (as in Figure 3, but with a trap) should often work satisfactorily, if the thickness of the cover material is not great enough to create a dam.

US EPA ARCHIVE DOCUMENT

US EPA ARCHIVE DOCUMENT

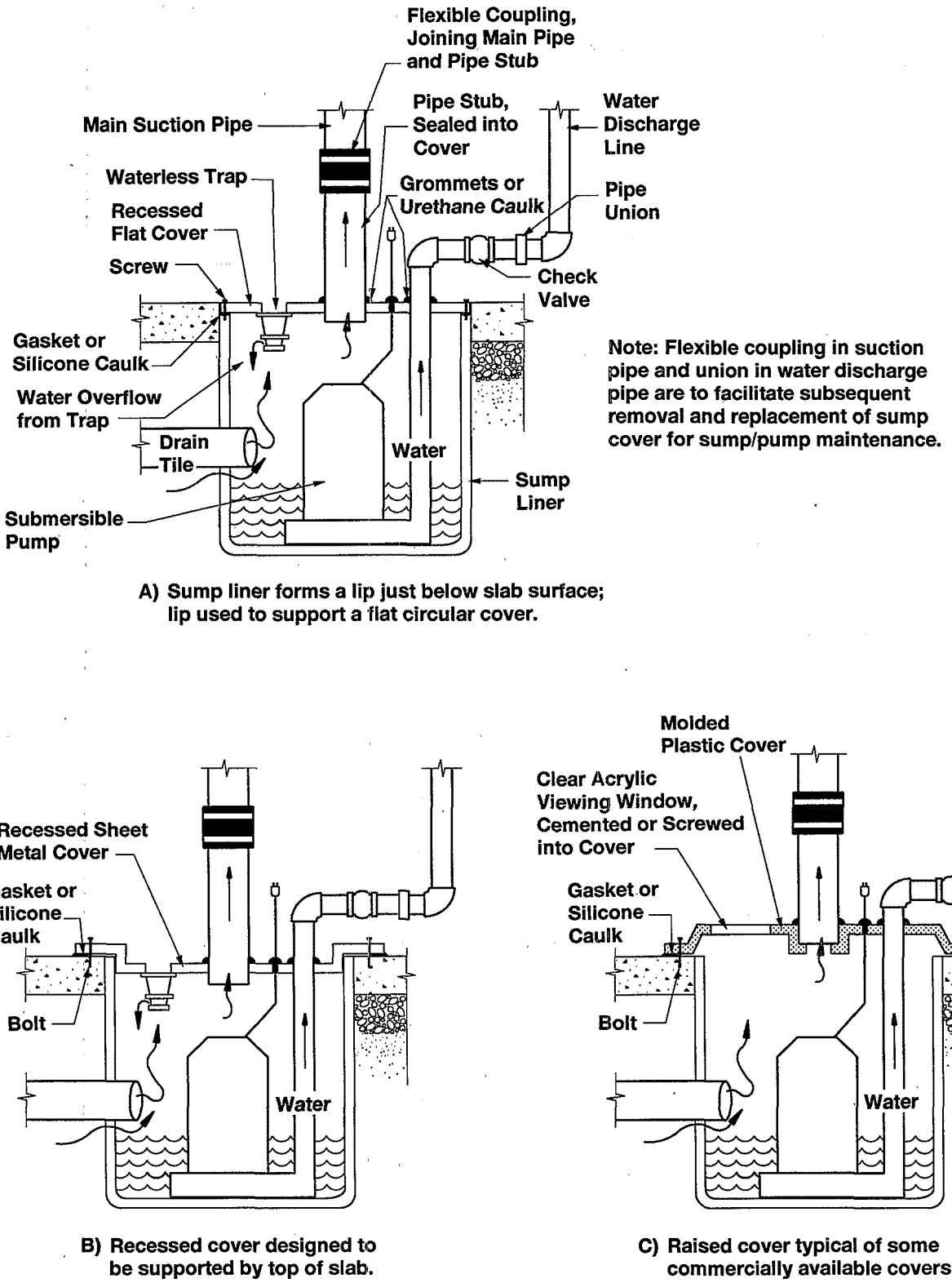

Figure 33. Some alternative sump cover designs (illustrated for the case where suction is being drawn at the sump).

Attachment of the sump cover. The cover must be attached to the slab, or to the lip of the sump liner, in a manner which will facilitate its subsequent removal and replacement for sump inspection and sump pump maintenance.

To facilitate cover removal, it is recommended that the cover be bolted tightly to the slab or lip, with a foam, rubber, or caulk gasket between the cover and the concrete or liner to help achieve air-tightness. When caulk is used as the gasket instead of foam or rubber, *silicone* caulk should be selected instead of urethane caulk for this particular application. Silicone caulk bonds less well to the concrete. This has the disadvantage of giving a less durable seal, but permits reasonably convenient removal of the sump cover.

Urethane bonds so well that the cover would be extremely difficult to remove. Thus, it is not recommended that urethane caulk be used to bond the cover to the slab or liner lip.

Where the cover rests on the lip of the sump liner, as in Figure 33A, appropriate screws or bolts should be used to attach the cover to the liner lip, with a suitable gasket in between to provide an air-tight seal. When silicone caulk is used as the gasket, a continuous, generous bead of caulk should be placed around the entire perimeter of the lip. With such recessed covers, provisions must be made so that the cover can be grasped for removal during subsequent maintenance.

When the cover rests on top of the slab, as in Figures 3, 33B, and 33C, masonry bolts or anchors would be used to secure the cover to the slab, with a suitable gasket between the cover and the slab.

Need for submersible sump pump. The pump in capped sumps should be a submersible pump. The motors of pedestal pumps, not designed for submersible operation, are subject to rusting if enclosed within a capped sump. Thus, the existing sump pump is not a submersible pump, it should be replaced with a submersible pump as part of the installation.

Installation of cover around pump connections. The water discharge line from the sump pump and the electrical connection to the pump must be disconnected, and fit through the corresponding holes in the cover when the cover is installed. The remaining gaps between the water line or the electrical cord and the cover must be sealed. This seal may be accomplished with gun-grade caulk. Alternatively, one vendor markets a line of rubber grommets which will fit tightly around the water line or the electrical cord, sealing the hole through the cover.

A check valve must be installed in the water discharge line from the sump pump. When the pump is not operating and this line is thus empty, the discharge line would constitute a major source of air leakage into the sump if the check valve were not installed, reducing the suction that the sump/DTD system would be able to maintain in the sump. Without the valve, outdoor air would flow from the water discharge point, down through the pipe and the sump pump and into the sump, under the depressurization created by the system.

Check valves can be designed to be threaded onto metal water discharge lines, cemented onto PVC lines, or attached to either metal or PVC lines using flexible couplings which are small versions of the couplings used to attach mitigation fans to the system piping. Many check valves can be mounted either horizontally (as in Figures 3 and 33) or vertically; others can be mounted only vertically. Where the check valve is connected by small flexible couplings, it can also be used as the point at which the water discharge line can be disconnected when the cover must be removed for maintenance. See *Design of the system to facilitate future maintenance* below.

When the check valve is cemented onto the water discharge line, it cannot be used to disconnect the line during sump maintenance. In these cases, a piping union should also be added to the discharge line near the sump (KI92). See Figure 33. The discharge line is cut at that point, and rejoined by the union nut. When this union is loosened, the water discharge line can be disconnected.

Connecting and supporting the sump suction pipe. When suction is to be drawn directly on the sump, the 4-in. PVC, PE, or ABS suction pipe is installed vertically down through the sump cover, as shown in Figures 3 and 33.

The gap between the outer circumference of the pipe and the hole through the cover must be effectively sealed. Again, caulk can be used to seal this gap, or, alternatively, a rubber grommet capable of fitting around the 4-in. pipe can be purchased. One advantage claimed for the grommet is that it will flex with the cover if someone steps on the cover, and will not break like a caulk seal might under those circumstances (KI92). Another claimed advantage is that the grommet ensures that the pipe does not contact the cover at any point, preventing pipe vibrations from being transmitted to the cover, potentially reducing noise.

In many cases, the weight of the piping will not be adequately supported at the sump cover. Thus, the weight of this pipe must be supported overhead, e.g., by hangars or strapping connected to the overhead floor joists, as discussed for SSD risers in Section 4.5.1 (and as illustrated in Figures 16 and 17). Since the sump will almost always be near a perimeter foundation wall, another option would be to offset the riser against the foundation wall, and to attach it to the wall, as discussed in Section 5.5.1 (see *Interior tile loops - supporting the remote suction pipe).*

To facilitate subsequent removal of the sump cover for pump maintenance, the PVC suction pipe should be cut near the cover penetration, and rejoined using a flexible PVC coupling with hose clamps. Thus, only a stub of 4-in. PVC piping would in fact be sealed into the cover. This situation is illustrated in Figure 33. When it was desired to remove the cover, the hose clamps would be loosened and the coupling moved, so that the pipe stub could be removed with the cover. The alternative to this approach would be to break the seal where the pipe penetrated the cover each time the cover needed to be removed, so that the cover could be removed while the entire suction pipe remained in place. One possible concern regarding this approach is that the personnel servic-

US EPA ARCHIVE DOCUMENT

ing the sump pump might not get the pipe penetration through the cover properly resealed when the cover was replaced.

Design of the system to facilitate future maintenance. It is re-emphasized that the effectiveness of the sump/DTD system will depend heavily on achieving and maintaining an effective seal of the sump with the cover. The caulk seals and the rubber grommets (if used) must remain intact, and any water trap (or waterless trap) through the cover must remain air-tight (i.e., water must remain in the trap, or the weighted ball or ring in the waterless trap must continue to seat properly). The occupant must be clearly informed (and the labelling on the system must clearly indicate) that these seals must be re-established if the cover is ever removed for subsequent maintenance of the sump pump.

The issue of installing the system in a manner to facilitate subsequent removal of the sump cover has been raised several times during the preceding discussion. In summary, with a properly installed system having the suction pipe through the cover, the removal might proceed as follows: 1) the sump cover would be unbolted around its perimeter (and, if there were a silicone caulk seal, that seal would be broken); 2) the flexible coupling connecting the suction pipe stub through the cover would be loosened and slid up or down (or, if such a break in the suction pipe is not included, the seal at the pipe penetration through the cover would be broken); 3) the water discharge line would be disconnected, either at the check valve (if the valve is connected using flexible couplings) or at the point where the pipe union is installed; and 4) the cover and the sump pump would then be removed from the sump as a unit, with the 4-in. PVC pipe stub, the water discharge line, and the pump electrical cord remaining sealed at their penetrations through the cover. If the pipe, water line, and electrical penetrations had been sealed using rubber grommets, the breakage of the seal where the suction pipe penetrates the cover (the alternative in step 2 above) would consist of simply loosening the grommet.

5.6 Design/Installation of the Piping Network and Fan

The design and installation of the piping network and fan for a sump/DTD system would be exactly as described in Section 4.6 for a SSD system.

5.7 Slab Sealing in Conjunction with Sump/DTD Systems

The same types of slab sealing, discussed in Section 4.7 in connection with SSD systems, would also be important for sump/DTD systems.

Perimeter channel drains. Sealing of perimeter channel drains, as discussed in Section 4.7.1, would be of particular importance for sump/DTD systems, in cases where the drain tiles form an interior loop around the basement perimeter. Because the suction would be being directed immediately beside the foundation wall by the tiles, such systems would exacerbate the leakage of house air down through unsealed perimeter channel drains into the system.

Wall/floor joint. For the same reason, sealing of the wall/floor joint where accessible (in cases where the gap is wider than, e.g., 1/32 to 1/16 in.) may be more important for sump/DTD systems than for SSD systems. See Section 4.7.5.

Sumps. As emphasized previously in Section 5, the sealing of sumps is an automatic and mandatory part of installing sump/DTD systems. The specific procedures for sealing sumps have been described in Section 5.5.2.

Floor drains. In some cases, floor drains may drain directly into the sump or into the drain tile loop. Where the floor drain drains directly into the sump, this will usually be apparent by virtue of a pipe from the drain penetrating the sump wall. Where the drain connects to the drain tile loop remote from the sump, this will be less apparent. Where floor drains drain into the sump/ drain tile system, it is particularly important that the floor drain be trapped. Otherwise, a substantial amount of basement air will be drawn into the system through the open drain, dramatically reducing system performance and increasing the house heating/cooling penalty.

Where the floor drain does not contain a trap, or where the trap does not remain full of water, a waterless trap can be installed, as discussed in Section 4.7.3. One alternative approach that some mitigators have used in cases where the drain empties directly into the sump, has been to create a "trap" inside the sump. By this approach, an elbow is fitted onto the floor drain pipe entering the sump, directing it downwards toward the bottom of the sump. There, it is immersed in a weighted plastic container full of water. One problem with this approach is that, if the pump does not regularly fill with water to a level above the top of the container, the container could dry out over time, rendering this in-sump trap ineffective.

Other drains. On occasion, other drains may also empty into the sump or into the drain tile loop. Any such other drains must be identified, and addressed in some appropriate manner.

Where the drain tile loop is outside the footings, basement window well drains (and sometimes even rain gutter downspouts) have occasionally been observed to empty into the drain tile loop. Large amounts of outdoor air would be drawn into the system if these features were not addressed in some manner. In the case of window well drains, they might be trapped in a manner similar to floor drains, or sealed altogether if they never receive any significant amounts of water. (One concern with the use of waterless traps in such exterior drains is that there is an increased risk that debris may enter the trap, preventing the weighted ball or ring from seating properly.)

On those infrequent occasions where rain gutters are found to empty into the tiles, one option would be to re-route the runoff from the gutters so that the gutter penetration into the tiles can be sealed off. However, rather than run the risk of modifying the house drainage patterns, the mitigator would probably be best served in such cases by abandoning sump/DTD as the mitigation approach, capping the sump, and using SSD instead.

5.8 Gauges/Alarms and Labelling

The considerations discussed in Section 4.8, concerning gauges/alarms and labelling of SSD systems, also apply to sump/DTD systems.

The system labelling should include clear instructions that the sump cover must be carefully resealed if it is ever removed for pump maintenance or for any other reason.

US EPA ARCHIVE DOCUMENT

US EPA ARCHIVE DOCUMENT

Section 6
Design and Installation of Active Drain-Tile Depressurization Systems (Above-Grade/Dry-Well Discharge)

Sometimes, rather than draining into a sump inside a basement, drain tiles will direct collected water to an above-grade discharge at a location on the lot remote from the house. Use of above-grade discharge requires that the lot be sufficiently sloped such that an suitable low point is available. Above-grade discharge is sometimes referred to as draining to daylight, or draining to an outfall. Or, rather than draining above grade, the water may be directed to an underground dry well away from the house, if the underlying soil is sufficiently porous.

A variation of above-grade discharge is sometimes encountered in farming communities. In this variation, the drain tiles around the house empty into an extensive existing network of field tiles that had originally been installed to drain the fields. The outfall from the field tiles might be a great distance from the house.

Tiles with above-grade or dry-well discharge are most common in basement houses. However, they will sometimes also be encountered around the footings of other substructure types on sloped lots.

Most often, the drain tiles draining to an above-grade discharge or dry well will form a partial or complete exterior loop, on the outside of the footings. Where the tiles form a complete loop, a length of tile (referred to here as the "discharge line") taps into this loop on the downhill side of the house, and extends away from the house (usually with a downward slope) to the point where it emerges above grade or ends in a dry well. The water collected in the loop around the foundation is discharged at that point. One common configuration for tiles with above-grade discharges, often encountered in houses having walk-out basements, has the tiles forming a U around the three sides of the house that are below grade (the uphill side of the house, and the two ends); each leg of this U (one on each end of the house) then comes above grade on the downhill side of the house.

Less commonly, these tiles may be interior to the footings, beneath the slab. In this case, the discharge line must pass through or beneath the footings, to extend to the discharge point remote from the house.

Where tiles having an above-grade or dry-well discharge exist in basement houses, suction on these tiles can be a viable mitigation approach. Figure 4 illustrates a typical DTD/remote discharge system in a basement house.

The tiles will aid in distribution of the suction around the basement footings, near the major soil gas entry routes (the wall/floor joint and the block foundation wall). However, where these tiles are exterior tiles (which is often the case when there is a remote discharge), it can be important that the tiles form a complete or nearly complete loop (i.e., on at least three sides of the house). With exterior tiles, if there are major entry routes (such as a block fireplace structure penetrating the slab) toward the slab interior, it can also be important that sub-slab communication be reasonably good. Where the exterior loop is only partial, or where there are major interior entry routes, there is an increased chance that a DTD/remote discharge mitigation system may need to be supplemented by SSD pipes. See the discussion in the introduction to Section 5, regarding the cases under which sump/DTD systems with exterior loops may need to be supplemented by SSD.

While exterior drain tiles with remote discharges sometimes also are present in slab-on-grade and crawl-space houses, the data are limited regarding whether DTD/remote discharge would be an effective mitigation approach in those substructure types. In slab-on-grade houses, the tiles may be near the surface (depending upon the depth of the footings), so that large amounts of outdoor air could sometimes be drawn into the system, potentially reducing system effectiveness. In crawl-space houses, the suction on the tiles might not be expected to significantly reduce the amount of soil gas entering the crawl space. For these reasons, the following discussion focuses on basement houses.

One mitigator who has tested DTD/remote discharge in these other substructure types (KI92) reports that the technique has worked well in slab-on-grade houses in Colorado, because the footings are at a sufficient depth (30 in.) to reduce entrainment of ambient air into the system. In crawl-space houses, DTD/remote discharge with a membrane over the crawl-space floor is consistently less effective than traditional individual-pipe SMD.

Many of the details involved in designing and installing DTD/remote discharge systems are similar to those for SSD and sump/DTD systems, discussed in Sections 4 and 5. The dis-

cussion in this section will focus on those design/installation features unique to DTD/ remote discharge.

The discussion in this section draws heavily from the detailed review of available data on active DTD/remote discharge systems, presented in Section 2.3.3.

6.1 Selection of the Number of Suction Pipes: Need for a SSD Component to the DTD/Remote Discharge System

If the drain tiles form a complete (or at least three-quarters complete) *exterior* loop and if the sub-slab communication is reasonably good, one suction pipe, drawing suction on the drain tiles at a convenient location, will normally be sufficient. Even if sub-slab communication is only marginal, one pipe depressurizing a complete exterior loop will probably be sufficient, if there is no major soil gas entry route toward the interior of the slab, remote from the perimeter.

If the tiles form an *interior* loop, one suction pipe tapping into the tiles will usually be sufficient if: a) the loop is a complete loop, whether communication is good or marginal; or b) the loop is only partial, if communication is good. A second suction pipe tapping into the drain tiles would be needed only if one segment of tiles was isolated from the remainder of the loop by silting or physical damage, in which case a second pipe would be needed to treat the isolated segment. Such isolation of a particular segment could be difficult to ascertain in practice.

Under the conditions in the preceding two paragraphs, additional SSD pipes will often not be necessary to supplement the DTD/remote discharge system, unless the tiles have been silted or damaged.

If the tiles are *outside* the footings and form only a partial exterior loop (i.e., are beside fewer than three sides of the house), or if sub-slab communication is marginal or poor and there is a significant entry route toward the slab interior, then the chances are increased that an exterior DTD/remote discharge system would have to be supplemented by SSD pipes. Likewise, if the tiles are *inside* the footings, SSD pipes may be necessary if the interior loop is only partial and if, in addition, the communication is marginal or poor.

However, one mitigator has reported sometimes achieving good performance with partial exterior loops without crushed rock beneath the slab (Kl92). In these cases, the slab is resting directly on graded native soil (a decomposed granite). (Crushed rock *is* present in the trench around the footings containing the drain tiles.) This good performance may be due to: relatively good permeability in the native soil underlying the foundation in some cases, enabling the suction field to extend beneath the footings into the sub-slab region, and around the perimeter to locations where tiles are absent; and the tendency of the tiles to intersect below-grade trenches via which utility lines penetrate the foundation, providing a relatively high-permeability route for the suction to penetrate the foundation wall.

The extent of the drain tile loop, and whether it is exterior or interior, can be difficult to ascertain unless the homeowner observed the tiles being installed during construction of the house, unless there are reliable as-built drawings, or unless a confirmation can be obtained directly from the builder. Excavation at several locations around the foundation during the pre-mitigation visual survey can reveal whether the loop is outside the footings, and whether it appears to be complete. However, if the footings are very deep, such excavation could be a time-consuming process. The presence of a discharge line emerging above grade on each end of the house would tend to confirm that the tiles form a U around three sides of the house. Adjoining wings (e.g., a slab on grade adjoining a basement) increase the likelihood that the tile loop is discontinuous, and that the adjoining wing may require treatment with supplemental SSD pipes. However, in some cases, an exterior drain tile loop will extend around adjoining slab-on-grade living areas as well as the basement.

If the sub-slab communication is not apparent from observations during the visual inspection or from experience with house construction characteristics in the region, qualitative suction field extension testing can be conducted with the diagnostic vacuum cleaner. Together with information on the nature of the tile loop, the pre-mitigation suction field data would suggest the likelihood that SSD pipes will be necessary as a supplement to the DTD/remote discharge system. But unless the location and extent of the tile loop can be estimated reasonably well, the vacuum cleaner diagnostics may not suggest specifically the number of supplemental SSD pipes that will be needed, or where they should be placed.

In summary, rather than excavating around the house to assess the extent of the drain tile loop, and rather than doing pre-mitigation suction field extension measurements, it may often be more cost-effective to simply proceed to install the DTD/remote discharge system. The appropriate number and location of supplemental SSD pipes (if any turn out to be needed) can then be determined from sub-slab suction field measurements and indoor radon measurements after the DTD system is operating. One mitigator with substantial experience installing DTD/remote discharge systems reports that, at least under the conditions he experiences, supplemental SSD pipes are generally not needed (Kl92).

If the likelihood appears high that supplemental SSD pipes are going to be needed, then the mitigator might opt to abandon the option of installing a DTD/remote discharge system, and to instead focus directly on a SSD system. This could be particularly advisable in cases where the house has a basement that is not heavily finished, so that installation of a SSD system would not be especially complicated.

If any SSD pipes turn out to be needed, supplementing the DTD/remote discharge system, the SSD component of the system would be designed and installed as described in Section 4. The SSD pipes might be manifolded to the same exterior fan and exhaust stack that is serving the DTD system. (Since the drain tiles will most often be exterior tiles when there is a remote discharge, the fan and exhaust for a DTD/ remote discharge system will almost always be outdoors.) Alternatively, it may sometimes be more convenient to install

a separate fan and exhaust stack for the SSD pipes, so that the SSD system will be completely independent of the DTD system.

6.2 Selection of DTD Suction Pipe Location

Since the suction will extend readily through the entire drain tile network, the suction pipe may be connected to the drain tiles at any convenient location. With the exterior tiles most commonly encountered when there is remote discharge, the fan will almost always be mounted on this vertical suction pipe at the point where it extends above grade level, as illustrated in Figure 4. Many of the criteria used in selecting the suction pipe location will be based upon the advantages and disadvantages of having the fan at that location.

The suction pipe is most commonly installed in the loop of tiles immediately beside the footings, for several reasons. However, it could also be installed in the discharge line leading away from the house to the water discharge location.

Figure 4 depicts the suction pipe tapping into the single discharge line near the house. This location is shown in the figure only for ease of illustration; it is not a recommendation that the suction pipe should necessarily be located at that point.

Location of suction pipe in loop beside the house. There are several reasons why it is common to install the suction pipe into the tiles immediately beside the footings, rather than in a discharge line more remote from the house. First, location of the vertical suction pipe immediately beside the house greatly facilitates mounting a stack against the side of the house, exhausting above the eave, consistent with EPA's interim standards (EPA91b).

Second, if the suction pipe is mounted in the discharge line remote from the house, there can be a significant suction loss between the suction point and the house at the flows encountered (usually 50 to 150 cfm with a 90-watt fan); this is especially true if the drain tiles are the flexible corrugated type, which offer about 1.8 times the wall friction of smooth pipe (KI92). Since DTD with exterior loops can be dependent upon maintaining very good suction in the exterior tiles, if this suction is to extend beneath the foundation into the sub-slab, this suction loss has been observed to be significant.

Other factors contributing to suction loss between remote fans and the house are: damage to the discharge line while it was exposed during construction; blockage of the line by, e.g., rodent nests; and leakage of outdoor air into the line, since the discharge line will be close to grade at locations remote from the house. These factors have been found to have a significant effect on system performance when the suction pipe is installed in the discharge line remote from the house (KI92).

A secondary consideration in remote location of the fan is that the electrical connection will have to extend some distance back to the house. However, with the use of underground conduit, this is not a major problem.

When the suction pipe is installed in the loop immediately beside the house (or in the discharge line near the house), the pipe should be installed at a location where the fan and the exhaust stack (which will generally rise straight upward above the fan) can aesthetically be installed. The criteria used to select this location were discussed in Sections 4.6.2 (see *Selection of where the piping exits the basement)* and 4.6.5 (see *Selecting the location of exterior or garage stacks).* This location would be at the rear of the house, and at a point where the stack will not be rising in front of windows. It may also be helpful to locate the connection (and the fan) away from the bedroom wing, if possible, to reduce the risk of the occupants being disturbed by fan or exhaust noise. If the DTD/remote discharge system is going to be supplemented by SSD pipes, the DTD suction pipe location may be selected to simplify manifolding together with the SSD piping.

Other factors can also be considered in selecting the location in the loop around the house. First, a central location would generally be preferred. For example, if the tiles form a U around three sides of the house, it might be preferred to locate the suction pipe toward the bottom of the U, rather than at one end, in order to achieve even distribution of the suction field.

Second, the mitigator may not wish to choose the location where the footings and tiles are the deepest below grade, in order to avoid excessive excavation to expose the tiles at that point. However, neither should a particularly shallow location be selected, since that could result in greater short-circuiting of outdoor air into the system through the soil. It is recommended that the suction pipe be installed at a point where the tiles are at least 3 ft below grade.

Location of suction pipe in discharge line remote from the house. Figure 4 is attempting to depict the case where there is a complete tile loop around the foundation, and where the suction pipe taps into the single discharge line leading from this loop to the outfall. In other cases, the tiles could form a U around three sides of a walk-out basement, with each leg of the U coming above grade (on opposite ends of the house). Where the tiles form a U, the suction pipe could be located in either one of the two discharge lines, if it were desired to tap into a discharge line remote from the footings.

Several potential advantages may be apparent if the suction point were located in the discharge line remote from the house. However, these apparent advantages may often not be sufficient to justify remote location. One possible advantage of remote location is that locating the suction pipe in the discharge line near the outfall will generally reduce the amount of excavation that will be required in basement houses. The discharge line near its outfall will be at a shallower depth than will the loop beside the foundation, which will be at footing depth. There will have to be some excavation around the discharge line in any event, even if the suction pipe is in the loop beside the foundation, in order to install a check valve in the discharge line (see Figure 4 and Sections 6.5 and 6.7). For efficiency, it could be reasonable to install the suction pipe and the check valve into the drain tiles at the same excavation. This savings in excavation effort can be offset by reduced system performance, as discussed above.

A second advantage of remote location of the suction pipe is that the fan would be away from the house, reducing the fan and exhaust noise in the living space. A third possible advantage, if an exhaust stack were not required, would be that the suction pipe could be located such that the fan is mounted behind shrubbery a couple feet above grade away from the house, which could provide a better appearance than would be the case if the fan were immediately beside the house. Such remote location of the exhaust could also sometimes reduce the amount of exhaust re-entrainment back into the house. However, EPA's interim mitigation standards (EPA91b) currently require that a 10-ft tall stack be installed above the fan in such remote installations, to avoid exposure of persons in the yard; thus, it would not be possible to realize any aesthetic benefits from hiding the fan behind shrubbery remote from the house.

If the discharge line consists of perforated piping, the suction pipe should be installed at a point where the line is at least 3 ft below grade, to reduce outdoor air short-circuiting into the system through the soil.

Considerations when the tile loop is inside the footings. On occasion, the drain tile loop may be inside the footings, rather than exterior. In such cases, connecting the suction pipe to the tile loop (rather than to the discharge line) would require that a hole be cored through the basement slab in order to access the tile. Under these conditions, the system would take on the appearance of the left-hand side of Figure 3, where a sump/DTD suction pipe is tapping into interior tiles at a point remote from the sump.

Tapping into the interior loop beneath the slab would make it possible for the system piping to be indoors. This situation could reduce the aesthetic impact outdoors, and may be preferred in specific cases if the basement is partially unfinished and if there is a route for the exhaust stack either up inside the house or through an adjoining garage. But if the fan and stack will have to be outside the house in any event, due to interior finish and/or homeowner preferences, it will be easiest to simply tap into the discharge line outside the house. Installing the suction pipe in the discharge line in these cases will avoid any aesthetic impact indoors, one of the general advantages of DTD/remote discharge systems.

6.3 Selection of Suction Pipe Type and Diameter

The considerations in selecting the type of suction pipe, and the piping diameter, are the same for DTD/remote discharge systems as those discussed in Section 5.3 for sump/DTD systems.

The flows from DTD/remote discharge systems appear to be commonly about 50-150 cfm with the 90-watt fans, the same range observed from sump/DTD systems. Accordingly, as discussed in Section 5.3, 4 in. diameter piping will normally be preferred to avoid undue friction loss and flow noise. Four in. piping is also of a convenient size for connecting to the existing drain tiles, which are usually 3 or 4 in. diameter.

The length of piping associated with DTD/remote discharge systems may be relatively short when the suction pipe is immediately beside the house. The piping system illustrated in Figure 4 would have an equivalent length (including the equivalent length of the fittings for friction loss purposes) of only about 35 ft, even for a two-story house. At the upper end of the observed flow range (100 to 150 cfm), the total friction loss that would be expected in this length of 4-in. piping would be about 0.2 to 0.5 in. WG, based on Figure 13. This suction loss can generally be handled by the 90-watt tubular fans. Hence, use of 6-in. piping to reduce the suction loss is probably not warranted in most cases, although it may occasionally be desired to reduce flow noise.

At the middle to upper end of the flow range, the suction losses (0.8 to 2 in. WG) and flow noise could nominally become unacceptable if 3-in. piping were used for the 35-ft system. As discussed in Section 5.3 in connection with sump/DTD systems, if 3-in. piping were in fact used, flows would drop, and the fan would operate at a different point on its performance curve; hence, suction losses and flow noise would in fact be less. Suction in the drain tiles would also be reduced. In the case of sump/DTD systems, especially when there is a complete interior loop with good aggregate, this reduction in tile suction that would result from the use of 3-in. pipe may sometimes be tolerated without a dramatic reduction in performance. But with DTD/remote discharge systems, where the tiles are commonly exterior to the footings and where communication to interior entry routes is less well assured, it is less clear that the reduced suction could be tolerated. Accordingly, with DTD/remote discharge systems, it would seem generally more desirable not to reduce the pipe diameter below 4 in.

6.4 Selection of the Suction Fan

Since the flows from DTD/remote discharge systems are usually similar to those from sump/DTD systems, the considerations in selecting a fan are generally similar to those discussed for the sump system in Section 5.4.

At the flows typical in these systems with 90-watt in-line tubular fans (50-150 cfm), these fans can commonly establish suctions of about 0.75-1.0 in. WG in the system piping, based upon the fan performance curves. These suctions should usually be sufficient to handle the friction losses in 4-in. diameter piping, and to achieve good system performance. Thus, the 90-watt fans would generally appear to be a good choice for DTD/remote discharge systems.

With sump/DTD systems, the smaller, 50-watt tubular fans discussed in Section 4.4.1 will sometimes give adequate performance under favorable conditions (with the tiles forming a complete loop inside the footings, and with good sub-slab communication). These smaller fans are not recommended for DTD/remote discharge systems. Remote discharge systems commonly involve exterior drain tiles. Exterior tiles may be expected to face a greater challenge in extending a suction field under the footings and through block foundation walls to treat interior slab entry routes. Thus, it is considered advisable to routinely use the larger fan in DTD/remote discharge installations.

US EPA ARCHIVE DOCUMENT

The in-line radial blowers discussed in Section 4.4.2 could also be considered for use on DTD/remote discharge systems. For systems having flows around 100 cfm and higher, the additional expense of a radial blower would not be warranted, since the blower would not be maintaining suctions higher that those which would be produced by a 90-watt tubular fan. However, for lower-flow systems, the radial blowers could establish a significantly higher suction (2 to 3 in. WG at 50 cfm, compared to about 1.25 in. WG with a 90-watt tubular fan at that flow). The increased suction may sometimes be useful in achieving better performance with exterior drain tiles.

As with sump/DTD systems, the relatively high flows characteristic of DTD/remote discharge systems mean that the high-suction, low-flow fans, discussed in Section 4.4.3 for SSD installations in poor-communication houses, would never be applicable in this case.

6.5 Installation of a Suction Pipe into the Drain Tiles

In most cases with DTD/remote discharge systems, the suction pipe will be installed into an exterior drain tile loop or into a discharge line outside the house. The discussion here thus focuses on that case.

For those limited cases where there is an interior loop and the mitigator elects to tap into this loop through the basement slab, inside the house, the reader is referred to the discussion in Section 5.5.1, for the case where a sump/DTD suction pipe is installed into an interior loop remote from the sump. See *Interior tile loops - connecting the remote suction pipe (indirect approach)* and *Interior tile loops - connecting the remote suction pipe (direct approach)*. Installation of the suction pipe inside the basement is not discussed any further here.

Finding the remote outfall(s). Where the tiles discharge above grade remote from the house, the first step will generally be to locate the outfall(s) for the discharge line(s). The location of the outfall(s) will need to be known so that a check valve can be installed, as discussed later, regardless of where the suction pipe is to be installed.

Locating the outfall(s) will usually be done during the pre-mitigation visual survey. This is not always easy, since outfalls will sometimes be covered by dirt and leaves. The mitigator should be alert to the possible presence of two outfalls, as would be the case when the tiles form a U around three sides of the house and discharge at each end.

If the drain tiles empty into an extensive network of field tiles, finding the distant outfall from the field tiles might be extremely difficult, and is probably not necessary.

Finding the exterior drain tiles or discharge lines. To install the pipe, an excavation is made to expose the drain tile at the selected location.

If the pipe is to be installed in the exterior loop around the foundation, the excavation would be immediately beside the house. In this case, finding the tile should be relatively easy; it is known that the tiles will be right beside the footing. The only question would be whether tiles are present beside the footing at the particular location where it is desired to install the suction pipe, if the loop is not complete. Where the basement has an adjoining slab-on-grade or crawl-space living area, tiles will not always be present beside the adjoining wing; where there is an adjoining slab-on-grade garage, tiles will generally not be present by the garage.

If, instead, the pipe is to be installed in the discharge line, some exploratory excavation may be needed to find the discharge line at the desired distance from the house. Visually tracing the path of the discharge line between the outfall and the house will suggest the general path of the discharge line, but may not reveal the precise location of the line.

Maintaining integrity of gravel trench and cover. The drain tile loop by the footings will commonly be laid in a trench filled with gravel, as illustrated in Figure 4. Sometimes this trench may be covered by some material to prevent silt from working its way into the gravel. If present, this material may be geotechnical cloth in some cases, although such materials as roofing paper, straw, and newspaper have sometimes been encountered.

During the excavation to expose the tiles, care should be taken so that the gravel trench and any cover material can be properly restored around the tiles after the pipe installation is completed. For example, sections of the cover material should not be damaged or disposed of.

Pipe installation using rigid T-fitting. One option for installing the suction pipe into the drain tiles would be to use a rigid PVC, PE, or ABS T-fitting. This is the approach which is illustrated in Figure 4, for the case where the discharge line consists of flexible black corrugated high-density polyethylene or polypropylene, which is common in many areas.

Where a rigid T-fitting is to be used, the drain tile is severed at the point where it is exposed, in order to accommodate the T-fitting. This fitting (usually 4 in. diameter, as discussed in Section 6.3) is installed with the T inverted, with the leg of the T extending upward. The ends of the top of the inverted T are connected to either end of the severed drain tile.

When the drain tile is 4-in. diameter flexible corrugated tile as in Figure 4, one option for making this connection would be to force each severed end of the tile into one of the openings in the top of the T, as illustrated in Figure 4. In the figure, the tiles are shown as being attached to the T fitting using a bead of urethane caulk between the tile and the fitting, and by screws through the fitting into the tile.

Careful caulking of the tile/fitting seam may not always be necessary. If suction leaks into the gravel trench around the footings, this will still be directing the suction where it is desired. However, it is advisable that some steps be taken to ensure that the tile and fitting do not subsequently become disconnected. Disconnection might sometimes result in excessive ambient air leakage into the system, and could provide an opening that could permit gravel or silt to partially block the tiles.

US EPA ARCHIVE DOCUMENT

In some areas, the flexible corrugated tiles are 3 in. rather than 4 in. diameter. Three-in. tiles would fit loosely but satisfactorily into the ends of the 4-in. T-fitting, for the type of installation illustrated in Figure 4.

In some cases, the drain tiles will be rigid perforated PVC or ABS pipe, or baked clay. To install a rigid T-fitting onto rigid PVC pipe, one option could nominally be to cement the PVC T-fitting directly onto the severed ends of the PVC drain tile (or to cement an ABS T-fitting onto ABS drain tile). However, it may be more practical to connect the ends of the T to the rigid plastic or clay tiles using a flexible PVC coupling, similar to those typically used to attach ASD fans to the system piping. In this case, the coupling would likely be a straight 4-in. x 4-in. coupling, rather than the 6-in. x 4-in. couplings shown in Figure 4 and elsewhere for attaching fans. The couplings could be clamped to the tile and to the T using hose clamps. These flexible couplings are commonly used for underground sewer pipe connections, and are advertised as being resistant to soil chemicals and roots.

However the rigid T is installed, a vertical section of PVC piping is then cemented into the leg of the T, extending upward to above grade level. Usually, the suction fan will be mounted vertically, directly on this riser, a couple feet above grade level, as shown in Figure 4. The T-fitting will rest on the soil beneath the tiles, and will thus support the weight of the overhead piping and fan.

Pipe installation directly into tiles without rigid T. It is also possible to insert the suction pipe directly into the drain tiles without severing them and installing a rigid T-fitting.

A variety of approaches might be envisioned for accomplishing this. The following approach has been used often by one mitigator who commonly encounters the flexible corrugated drain tiles (KI92).

A flexible corrugated T-fitting is used. The 4-in. PVC suction pipe—long enough to extend above grade—is mounted on the upward leg of the corrugated fitting. This is done by twisting the corrugated leg of the fitting up into the PVC pipe with a liberal amount of urethane caulk; several sheet metal screws are then inserted through the wall of the PVC pipe and into the corrugated material inside, to create a firm joint. Where the corrugated drain tile is 4 in. diameter, it may be helpful to cement a 4-in. PVC straight coupling onto the bottom of the PVC riser; the larger inside diameter of the coupling (4.5 in.) may facilitate a comfortable fit of the corrugated tile up into the PVC pipe.

About one-third of the horizontal bottom of the inverted T fitting is cut off, creating a horizontal "saddle" which can be snapped over the existing corrugated drain tile.

A liberal amount of urethane caulk is spread over the interior of the corrugated T-fitting saddle, and this saddle is snapped down over the drain tile with the PVC pipe extending upward. Sheet metal screws are used to firmly connect the saddle to the drain tile while the caulk cures. A hole saw blade of suitable diameter (3 to 4 in.), mounted on a shaft long enough to extend down through the PVC riser, is then used from above to cut a hole in the top of the drain tile directly beneath the riser. The corrugated plug cut from the tile will come up with the hole saw when the saw is withdrawn.

As an alternative to using the hole saw, one could consider cutting a hole in the top of the drain tile before the corrugated saddle is attached.

Unlike the case where a rigid PVC T-fitting was used to connect the suction pipe, this flexible corrugated T saddle will not as effectively support the weight of the piping and fan overhead. Thus, in this case, it may be desirable to support the fan using a bracket attached to the side of the house, or using some other means.

Installation of a check valve at the outfall. Where the discharge line discharges to an above-grade outfall on the lot, a check valve (or reverse flow valve) must be installed somewhere in the discharge line. The check valve permits water in the discharge line to flow out into the outfall, but would prevent outdoor air from flowing up the line in the reverse direction in response to the suction being developed by the mitigation fan.

The check valve is mandatory. Failure to install this valve would result in a substantial reduction in system radon reduction performance. Suctions would drop dramatically, due to the large amount of outdoor air flowing into the system. Where there are two outfalls, as where the tiles form a U around three sides of the house, a check valve must be installed in each outfall.

Usually, the check valve is installed at the outfall, as in Figure 4. Where the suction pipe is also installed in the discharge line, rather than in the foundation loop, the check valve *must* be between the suction pipe and the outfall; it *must not* be between the suction pipe and the house.

Where the discharge line empties into an underground dry well rather than an above-grade outfall, a check valve may not be needed. If the dry well is near grade level and is configured such that large amounts outdoor air might be drawn into the system through the gravel bed, a check valve could be desirable.

Among the commercially available check valves that can be used in this application are units which are ordinarily used to prevent sewer line waste water and gases from backing up into drains which empty into the sewer line. These valves are available in 4-in. PVC fittings. The conventional sewer line check valves contain a hinged, spring-loaded gate in the pipe which is normally held closed, but which would open toward the outfall when the amount of water becomes sufficiently great on the side of the gate toward the house. The gate cannot swing open in the other direction, so that the suction developed by the fan could never cause the gate to open toward the house, drawing in outdoor air.

The check valve illustrated in Figure 4 is not a conventional sewer line valve, but is a valve being marketed specifically for used in DTD/remote discharge systems. It is not spring loaded. A trap door mounted on a 45° angle is held closed by gravity

US EPA ARCHIVE DOCUMENT

when no water is present, but is sufficiently buoyant to lift when there is water, allowing the water to flow to the outfall. This valve requires less water than do conventional sewer valves to cause it to open, ensuring efficient discharge of any water in the tiles.

In the second edition of this technical guidance manual (EPA88a), a water trap rather than a check valve is shown as being installed in the discharge line to prevent air flow into the system. The water trap is no longer the recommended approach for accomplishing this objective. Check valves are easier to install, usually requiring less excavation. Check valves have the additional advantage that they will not dry out during extended periods of dry weather, as a water trap could unless the homeowner was careful to add water. If a water trap dried out, the performance of the system would deteriorate significantly. And unlike a check valve, which could be installed at or near grade level, a water trap would have to be installed at a sufficient depth such that the water in the trap would not freeze during extended periods of cold weather; this could necessitate additional excavation. Water traps could also become partially blocked by dirt and debris over the years.

Although the check valve could be installed anywhere in the discharge line between the outfall and the suction location, they will usually most conveniently be installed at the outfall. To install the check valve in this case, the corrugated tile would have to be exposed at the outfall. Then, possibly, a short length of the existing tile would have to be removed to make room for the valve fixture.

Check valves are commonly mounted in a segment of 4-in. PVC piping. Thus, once the tiles have been exposed at the outfall, the pipe segment containing the valve would be installed onto the drain tiles in the same manner described above when a rigid T is employed to install the suction pipe (see *Pipe installation using rigid T-fitting).*

When the drain tiles are flexible corrugated material, as in Figure 4, the end of the corrugated drain tile is twisted into the PVC pipe segment containing the check valve. A liberal amount of urethane caulk is used at this joint, to hold the check valve fixture in place and to prevent outdoor air leakage through the seam (which will necessarily be at or near grade). Sheet metal screws through the PVC into the corrugated material provide further physical support. Where the drain tiles are 4-in. corrugated material, a 4-in. PVC straight coupling (4.5 in. i.d.) can be cemented onto the end of this check valve pipe segment as in Figure 4, to facilitate insertion of the 4-in. drain tiles. Where 3-in. corrugated tiles are present, the tiles would easily fit directly into the 4-in. piping without the coupling.

If the discharge line is rigid PVC pipe, the check valve could be cemented directly onto the end of the pipe. Or, if the line is rigid PVC or ABS pipe, or if it is clay tile, the check valve could be connected using suitable flexible PVC couplings with hose clamps.

Considerations when the tiles empty into field tiles. The preceding discussion regarding the installation of a check valve assumes the case where the drain tiles from the house discharge at an outfall relatively near to the house. On those occasions in farming communities when the tiles empty into a network of field tiles, the outfall from the field tiles can sometimes be a mile or more away from the house.

In such cases, it is probably neither necessary nor advisable to try to trap the entire field tile network at its outfall, even if the outfall could be located. When the outfall is that distant, it is not clear how much ambient air will really be drawn from the outfall. Moreover, it might not be advisable to risk restricting the out-flow from the extensive network, especially when the field tiles are draining fields owned by more than one landowner.

Experience with DTD/remote discharge systems in such cases indicates that a large amount of air will commonly be drawn into the DTD system from the field tile network (Wi92). If the mitigator finds it necessary to install a check valve to achieve acceptable performance in these cases, the check valve should be installed in the discharge line near the house, between the house and the point at which the house tiles connect into the field tiles. It has been reported that installation of a check valve may not always be necessary (Wi92).

Restoration and backfilling. After the suction pipe has been installed in the tile, the gravel bed around the tiles should be restored, as should any cover which was present on top of the gravel. All excavations must be filled in, to re-cover the tiles.

6.6 Design/Installation of the Piping Network and Fan

When the suction pipe is installed in an exterior drain tile loop immediately beside the foundation outdoors, or when it is in the discharge line near to the foundation, the system piping will be installed in the general manner described toward the end of Section 4.6.3 for the case of SSD suction pipes installed horizontally through the foundation wall from outdoors (see *Pipe routing considerations with horizontal penetration of suction pipes from outdoors).* The fan and exhaust stack (which would necessarily be an exterior stack) would be installed as discussed in Section 4.6.5.

The fan is mounted vertically on the riser a couple feet above grade level, as shown in Figure 4. Assuming that an exterior stack is planned to direct the fan exhaust above the eave, this stack would rise above the fan, and would be attached to the side of the house.

If the suction pipe were installed in the discharge line at some distance from the house, the issues involved in mounting the fan and designing the exhaust would be similar to those discussed toward the end of Section 4.6.5 (see *Remote exhaust - a variation of the exterior stack).* Of course, when the suction pipe is extending up from a drain tile discharge line as is the case here, the concerns expressed in Section 4.6.5 about ensuring proper drainage for any condensate or rainwater are automatically taken care of. As discussed in Section 4.6.5, location of the fan remote from the house would make it

US EPA ARCHIVE DOCUMENT

difficult or impractical to install an exhaust stack at least 10 ft high, in accordance with EPA's current standards.

In those limited cases where the suction pipe taps into an interior tile loop inside the basement, the design and installation of the piping network, and of the fan and exhaust system, would be exactly the same as described in Section 4.6 for SSD systems, where the SSD suction pipes are inside the basement.

6.7 Slab Sealing in Conjunction with DTD/Remote Discharge Systems

The same types of slab sealing, discussed in Sections 4.7 and 5.7 in connection with SSD and sump/DTD systems, would also be important for DTD/remote discharge systems. Since the drain tiles will often be exterior in remote discharge cases, it may be even more important for these openings to be sealed, since the extension of the exterior suction field under the footings and through a block foundation wall into the sub-slab region will likely be weaker than in the SSD and sump/DTD cases.

Since the drain tiles direct the suction immediately beside the perimeter foundation wall, it becomes of increased importance that the following openings be sealed: perimeter channel drains (as described in Section 4.7.1); wall/floor joints, where accessible and when wider than about 1/32 to 1/16 in. (Section 4.7.5); and perimeter expansion joints (Section 4.7.5).

Where floor drains drain directly into the drain tile network, these floor drains *must* be trapped if the DTD/remote discharge system is to be able to maintain suction in the tiles. Failure to trap these drains could result in a dramatic reduction in system performance, due to basement air leakage into the system via the open floor drain. Untrapped floor drains can be trapped by installing a waterless trap, as discussed in Section 4.7.3, or by plugging the drain if it is never used.

With the exterior drain tile loops usually encountered in remote discharge cases, it is not uncommon to find a variety of other drains emptying into the tiles. Particular examples which have been observed on occasion include drains from the bottom of basement window wells, and rain gutter downspouts. Any such other drains must be identified, and would have to be addressed in some appropriate manner to prevent excessive air leakage into the system.

As discussed in Section 5.7, in connection with sump/DTD systems, such drains can be impractical to address satisfactorily. Untrapped window well drains might be trapped with a waterless trap, similar to untrapped floor drains; however, the large amount of debris expected in such exterior drains might quickly render the waterless traps ineffective. Or, window well drains might be sealed altogether if they never receive any significant amounts of water; however, this could result in water problems later, if in fact water did enter the window wells. One mitigator having experience with DTD systems on exterior drain tile loops (Kl92) reports that these systems will sometimes still give reasonable performance even if connecting window well drains are not trapped or sealed.

Where rain gutter downspouts empty into the exterior tiles, perhaps the only viable option (if DTD/remote discharge is to be made to work effectively) is to re-route the runoff from the gutters to grade level at some appropriate location on the lot, so that the gutter penetration into the tiles can be sealed off altogether. However, rather than run the risk of modifying the house drainage problems and of facing a possible liability issue later, the mitigator would probably be best served in such cases by leaving the rain gutters alone, abandoning DTD/remote discharge as the mitigation approach, and using SSD instead.

The drain tile discharge line is one unique example of a "drain" opening to the drain tiles, which could enable excessive air leakage into the DTD/remote discharge system if not addressed. As discussed in Section 6.6, a check valve must be installed in the discharge line to prevent air leakage into the system.

6.8 Gauges/Alarms and Labelling

The considerations discussed in Section 4.8, concerning gauges/alarms and labelling of SSD systems, also generally apply to DTD/remote discharge systems. However, some special considerations also apply for the gauges and alarms, since the fan and piping for DTD/remote discharge systems will commonly be entirely outdoors.

Some of the gauges and alarms discussed in Section 4.8.1 are not weather-proofed for use outdoors. Thus, some of the devices designed for direct mounting on the suction pipe may not be applicable on the exterior piping unless protected by some form of enclosure. Such an enclosure could reduce the occupants' ability to see or hear the gauge/alarm.

Often it may be decided to mount a pressure gauge indoors, and to connect the gauge to the exterior suction pipe by 1/8-in. diameter flexible tubing that will penetrate the house shell. As indicated in Section 4.8.1 (see *Pressure gauges)*, some mitigators have reported that moisture can condense or freeze inside the tubing when the tubing extends outdoors, causing the gauge to give erroneously low readings. A mitigator may try to reduce this problem by insulating the tubing and/or using tubing of a larger diameter. However, it would seem that the most important step in such cases would be to advise the occupant of this risk and of how to correct it when the problem occurs.

Many alarms/pressure switches are designed to be mounted directly on the suction pipe. Such alarms having 110-volt wiring designed to plug into a house outlet may have to be hard-wired into the house circuitry, via exterior rated conduit extending through the house shell. Simply plugging these devices into an outdoor outlet, or routing the cord indoors and plugging it into an indoor outlet, will probably not be acceptable by code in most locations. As indicated in Section 4.8, the alarm must be wired into a circuit different from the one handling the fan.

In the particular version of the ammeter gauge discussed in connection with Figure 25B in Section 4.6.4, where the conduit from the exterior fan would be 24 volts, and where this

wiring would connect to an ammeter and 110- to 24-volt transformer inside the house, the 110-volt cord from the transformer could plug into an indoor outlet. Measuring current to the fan instead of pressure would avoid the risk of condensation and freezing in the outdoor segment of flexible tubing, discussed above.

The labelling requirements indicated in Section 4.8.2 would remain the same for DTD/remote discharge systems. The centrally located label describing the system would more likely be on the electrical panel or some other prominent location, rather than on the system, since the system will be entirely outdoors. If labels on the system piping are required only on exposed interior piping, in accordance with the current draft of EPA's final Radon Mitigation Standards, such labels would not be needed on DTD/remote discharge piping that is entirely outdoors.

US EPA ARCHIVE DOCUMENT

US EPA ARCHIVE DOCUMENT

Section 7
Design and Installation of Active Block-Wall Depressurization Systems

In the large majority of cases, SSD (or, where appropriate, DTD or SMD) will be the first variation of the active soil depressurization technology to be considered in a given house. BWD will usually be considered only as a supplement to SSD in houses having block foundation walls, in cases where SSD alone does not appear to be adequately reducing radon entry through one or more of the foundation walls. It appears that a BWD component is most likely to be required to supplement a SSD system when sub-slab communication is marginal or poor, and the SSD suction field is thus less well able to prevent soil gas entry into the wall void network. However, supplemental BWD has sometimes been found to be beneficial even in cases where the SSD system was maintaining good suction beneath the slab.

BWD has sometimes been found to be very effective as a stand-alone method, without a SSD component. However, its performance as a stand-alone method has been inconsistent.

Two variations of the BWD approach are considered: the "individual-pipe" approach; and the "baseboard duct" approach.

Individual-pipe approach. In the individual-pipe approach, an individual suction pipe is inserted into the block cavity at one or more locations around the foundation perimeter. This is the variation illustrated in Figure 5, for the case where BWD is being used as a stand-alone technique in a basement house.

The individual-pipe approach has been used in stand-alone BWD installations. It is also the approach commonly used when a BWD component is supplementing a SSD system. When used in conjunction with SSD, it is relatively easy to connect an individual BWD suction pipe to a SSD pipe located near the wall needing treatment, as illustrated in Figure 34. Thus, suction can be drawn on the walls via the same piping network that is being installed for the SSD system.

The individual-pipe variation has been tested almost solely in basement houses. A few tests have been conducted in slab-on-grade houses, with the individual BWD pipes penetrating the cavities in the block stem wall at or below grade, horizontally from outdoors. As discussed in Section 2.3.4, the results from slab-on-grade houses are insufficient to enable guidance regarding when such a BWD suction pipe is preferable in such houses over the option of penetrating the pipe all the way through the wall, making it a SSD pipe. BWD has not been tested in crawl-space houses, either as a stand-alone method or as a component supplementing SMD.

Because there is little or no experience in slab-on-grade and crawl-space houses, the discussion of individual-pipe BWD systems in this section focuses on basement houses.

Baseboard duct approach. The second BWD variation, referred to as the baseboard duct approach, is illustrated in Figure 35. In this approach, a series of holes is drilled into the void network around the perimeter of the basement, just above slab level. These holes (along with the wall/floor joint) are then enclosed within a plenum ("baseboard") sealed to the slab and wall around the perimeter, and this plenum is connected to a fan. In commercial installations, this plenum commonly consists of pre-fabricated sections of commercially available channel drain.

Compared to the individual-pipe approach, the baseboard duct approach should intuitively provide better distribution of the suction around the walls, because suction is not being drawn only at individual points. In addition, the baseboard duct approach is more likely to develop depressurization beneath the slab—especially in cases where the wall/floor joint is a perimeter channel drain—because the duct will be drawing some (albeit low-level) suction on the sub-slab region directly through that crack, providing a SSD component to the BWD system.

The baseboard duct approach is most commonly used for stand-alone BWD systems, rather than for adding a BWD component to a SSD system. Installation of baseboard ducting will usually be more difficult than installing individual suction pipes into one or two walls beside SSD risers as in Figure 34. Thus, where the objective is to tap a BWD component into SSD suction piping, the individual-pipe BWD approach is usually employed.

Where a stand-alone BWD system is envisioned, the baseboard duct and individual-pipe approaches are more likely to be comparable in installation effort. In the stand-alone case, the increased effort required with the baseboard duct ap-

US EPA ARCHIVE DOCUMENT

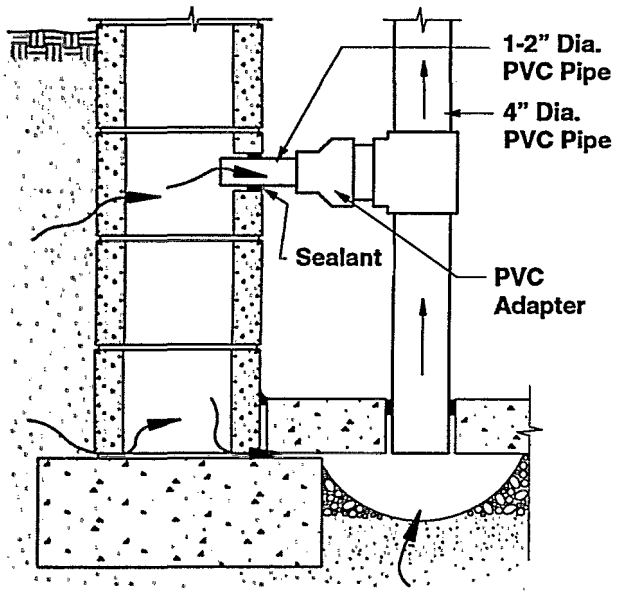

A) Reduced-diameter suction pipe installed in wall in order to reduce air flow out of wall, preventing BWD flows from overwhelming SSD system.

Note: Metal Dampers May Not Always Reliably Restrict Flows.

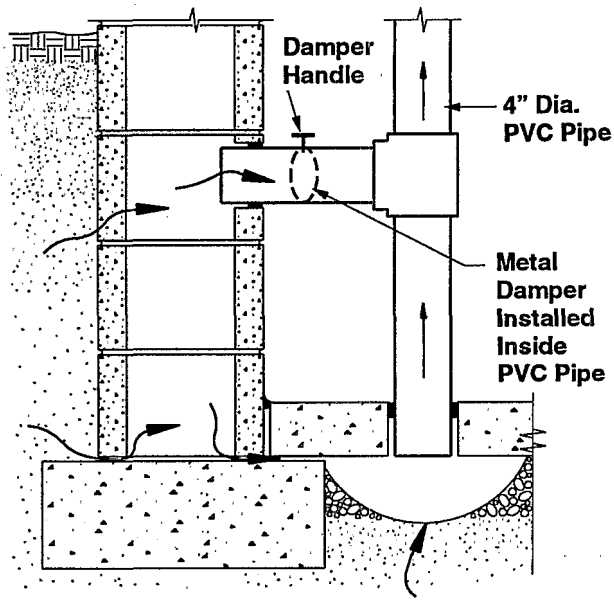

B) Metal damper installed in PVC pipe penetrating wall, to enable adjustment, restriction of air flow out of wall.

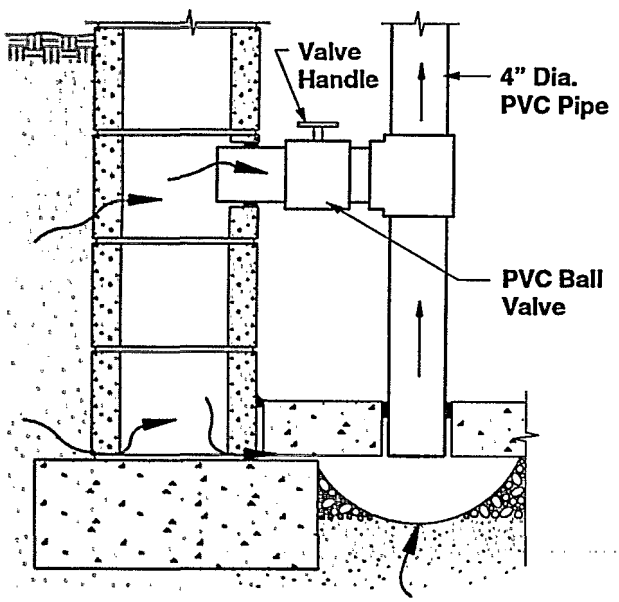

C) PVC ball valve installed to adjust, restrict wall flows

Figure 34. Some approaches for connecting individual BWD suction pipes into a SSD system.

US EPA ARCHIVE DOCUMENT

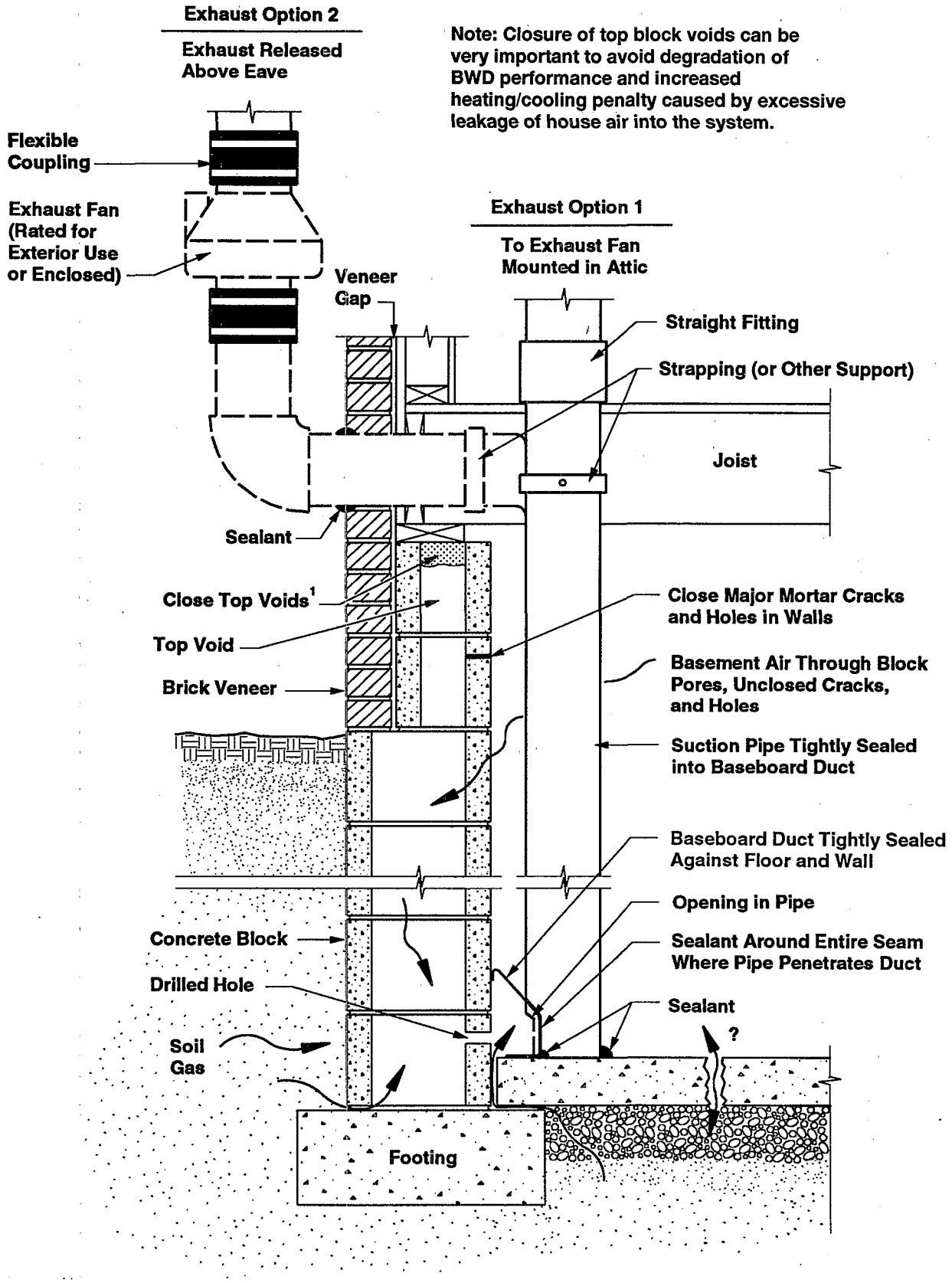

Figure 35. Block-wall depressurization (BWD) using the baseboard-duct approach.

proach—to drill holes around the perimeter and to seal the baseboard duct onto the wall and slab—may be offset by the increased effort required with the individual-pipe approach to manifold together the large number of individual pipes that may be needed around the basement.

Because of the nature of the baseboard duct installation, this BWD variation is applicable only in basement houses.

Depressurization vs. pressurization. The discussion in Section 7 addresses the case where the block-wall treatment systems are operated in suction. Where block-wall treatment is used in combination with SSD, operation in suction will be the usual approach.

However, where block-wall treatment is used as a stand-alone method, the amount of air withdrawn from the basement by the system may sometimes create sufficient basement depressurization to cause back-drafting of combustion appliances in the basement. In such cases, the mitigator may wish to consider operation of the block-wall system to pressurize, rather than depressurize, the walls. Block-wall pressurization is discussed in Section 9.

The discussion in this section draws heavily from the detailed review of available data on BWD systems, presented in Section 2.3.4.

7.1 Selection of the Number of Suction Pipes

7.1.1 Individual-Pipe Variation

Number of suction pipes per wall. With the individual-pipe variation of BWD, each block wall that must be treated will probably require one or two suction pipes.

Suction drawn in the block cavities of one wall (e.g., the front wall) will usually extend only weakly, if at all, around the corners into the adjacent end walls, for two reasons. First, the flows from a wall are usually fairly high, because of the extensive leakage area inherent in block walls; for this reason, the suction and flow field inside a wall will not be able to extend very far. Second, the mason who laid the block during construction could have applied the mortar and laid the blocks in a manner which inhibits the extension of the suction and flow field around the corner.

This same concern exists when there is a discontinuity in one wall (i.e., a pair of corners in a wall which causes the wall to be comprised of two parallel segments offset from each other). In such cases, at least one suction pipe may be needed in each wall segment that is to be treated.

Because the block walls are so leaky, one often cannot rely upon a wall cavity suction field extension test using a diagnostic vacuum cleaner (analogous to sub-slab suction field extension testing) to predict, prior to installation, when a given wall will need more than one suction pipe. The high air flows from the wall will often overwhelm the vacuum cleaner, with the result that little apparent extension of the vacuum's suction field may be apparent, even in cases where only one BWD suction pipe may turn out to be sufficient. As a rule of thumb, in EPA's installations in Pennsylvania (He87, Sc88), a second suction pipe was generally added whenever a wall was longer than about 25 ft.

The need for a second pipe in a given wall will be greater when that wall may be subject to particularly high air leakage. Features which could suggest high leakage include open top voids which cannot be effectively closed, exterior brick veneer (creating an air gap as illustrated in Figure 5), and a fireplace structure (which could conceal substantial leakage routes that cannot be sealed).

Number of walls that must be treated. Having determined the number of suction pipes required for each wall that must be treated, the total number of suction pipes in a BWD system will then depend upon the number of walls requiring treatment. This issue is discussed more fully in Section 7.2.1 (see *Selection of the walls that must be treated).*

When the BWD system is supplementing a SSD system, one or two walls will usually be treated. At one to two pipes per wall, the total number of supplemental BWD pipes would thus be one to four, most or all of which will usually be connected to a nearby SSD pipe with a T fitting as in Figure 34.

When an individual-pipe BWD system is installed as a stand-alone measure, all block walls which penetrate the slab may need to be treated. This would include the usual four perimeter walls, any discontinuities in the walls, any interior block walls and support structures, and, sometimes, the foundation walls for a crawl-space wing that adjoins the basement. A stand-alone BWD system could thus have a total of four to ten suction pipes.

In a limited number of cases where one or two walls were the primary radon entry routes into the house, stand-alone BWD systems have reportedly been successful treating only those walls (Mes92). Thus, in best cases, one or two pipes have occasionally been sufficient in stand-alone systems.

When an individual-pipe BWD system is installed as a supplement to a SSD system, the number of SSD suction pipes will be selected as discussed in Section 4.1. Usually, the number of BWD pipes will then be selected as necessary to complement the SSD system. In some cases, a tradeoff may be possible. The mitigator may choose to install an additional SSD pipe in an effort to prevent soil gas entry into a particular wall, rather than installing a BWD pipe in that wall, or vice-versa.

7.1.2 Baseboard Duct Variation

Vertical suction pipes. Usually, only one vertical suction pipe penetrates the baseboard plenum, as illustrated in Figure 35, if the plenum forms a largely continuous loop around the basement perimeter. The baseboard is supposed to distribute the suction from this pipe to the walls around the entire perimeter.

If the baseboard duct cannot be continuous due to obstructions or finish, and if the duct must be installed as two or more isolated segments, then a suction pipe must penetrate each

US EPA ARCHIVE DOCUMENT

segment. The suction pipes from the various isolated segments might be manifolded together, and directed to a single fan. Or, the pipe from one or more of the isolated duct segments might be directed to a second fan, as discussed in Sections 7.4 and 7.6.

Even in cases where the baseboard duct is continuous, without isolated segments, it may sometimes be desirable to have a second suction pipe penetrating the duct at a location remote from the first pipe. Because of the high flows expected in the duct, and the relatively small cross-section inside many commercially available pre-fabricated ducts, the suction loss inside the duct can be substantial. As a result, the suction inside the duct at a point remote from a suction pipe may be quite low (0.002 to 0.05 in. WG, or less). A second suction pipe, tapped into the duct on the opposite side of the basement from the first, could help increase the suction at the remote location, even if the second pipe is manifolded into the same fan as the first. If the second pipe is connected to a second fan, the improvement in suction would be greater.

Baseboard ducting. The preceding discussion concerning the number of suction pipes has focused on the rigid PVC, PE, or ABS pipe that penetrates the baseboard duct and leads to the fan (the vertical pipe labelled "Suction pipe" in Figure 35). However, the baseboard duct itself might be considered a "suction pipe," in the sense that it directs suction around the wall/floor joint.

Where there are no isolated segments of duct, the duct forms only one "suction pipe." Isolated segments can be avoided when the duct can form a continuous loop (an "O") or a nearly continuous loop (a "C," interrupted in only one location, e.g., where there is a door or a fireplace structure in the basement wall). To avoid isolated segments, there would also have to be no isolated interior block walls/structures penetrating the slab, requiring a separate segment of duct.

Where isolated segments of duct are necessary, each segment might be considered a separate "suction pipe." As discussed previously, each such segment will also require a separate vertical PVC suction pipe.

7.2 Selection of Suction Pipe Location

7.2.1 Individual-Pipe Variation

Lateral position on the wall. If a single individual BWD suction pipe is being installed into a wall, it would be generally logical to locate it near the horizontal center of the wall, midway between the two ends. However, if constraints (such as basement finish) prevent it from being installed in the center, it should be acceptable to locate if off center. Likewise, if two suction pipes are being installed into a wall, they would logically be placed about equidistant from each other and from the ends of the wall, unless constraints dictate otherwise.

If one section of the wall seemed to contain higher radon concentrations than the remainder of the wall, it would seem logical to locate a suction pipe in that section.

Where there is a discontinuity in a wall, one BWD suction pipe would be installed on each side of the discontinuity, to ensure that each wall segment would be treated. If there is a fireplace structure in a wall, potentially serving as a major unclosable leakage source, a suction pipe in that wall might be located near the fireplace structure.

If the BWD pipe is being installed as a supplement to a SSD system in a basement, the BWD pipe(s) in a given wall would normally be installed immediately adjacent to a vertical SSD suction pipe through the slab beside the wall, if possible, so that the BWD pipe protruding horizontally out of the wall can easily be T'd into the vertical SSD pipe.

Where possible, the exact location of a suction pipe would be selected to minimize the aesthetic impact (e.g., not in finished areas), and to minimize interference with house usage (e.g., not blocking a usual traffic route).

Vertical position on the wall. In terms of the vertical positioning of the BWD suction pipe on the wall, the suction pipe should be located as near to the slab as possible, preferably in the first or second block above the slab. Placement close to the basement slab should increase the possibility that the wall-cavity suction field will extend into the sub-slab region, treating the wall/floor joint and other slab-related entry routes away from the wall. That is, it will maximize any SSD component that the BWD pipes might provide. In addition, location of the penetrations close to the slab should help ensure the best depressurization of the cavities in the footing region, where most of the soil gas probably enters the void network.

Also, location of the individual BWD suction pipes near the basement slab will reduce the height to which soil gas is drawn up into the wall. This will potentially reduce the amount of radon that might then be drawn into the house if the low suctions being maintained in the voids by the BWD system were temporarily overwhelmed by homeowner or weather effects.

The BWD pipes use the wall cavities as a soil gas collector, drawing the gas up into the walls and out through the suction pipes. But the suctions established inside the wall voids by the system are low, lower than the 0.01 to 0.15 in. WG measured in the suction pipes. These low suctions are particularly subject to being overwhelmed by the basement depressurizations that can be created by, e.g., changes in temperature and turning on exhaust fans such as in clothes driers. If the BWD pipes are high on the wall and are, in essence, filling the cavities with diluted soil gas, an overwhelming of the system could draw this soil gas into the house.

Selection of the walls that must be treated—BWD as a supplement to SSD. In addition to the location of the pipes installed in a particular wall, another issue is *which* walls are selected to receive pipes.

Where an individual-pipe BWD component is being installed as a supplement to a SSD system, commonly only one or two of the block walls are treated. The usual situation is that the SSD system is taking care of most of the slab-related entry

US EPA ARCHIVE DOCUMENT

routes, and there are only one or two walls where the sub-slab depressurization is failing to adequately prevent soil gas entry into the wall cavities.

BWD components are usually added to SSD systems either: a) in cases where prior experience in similar houses (and perhaps pre-mitigation testing) suggests, prior to mitigation, that such a component is needed; or b) in cases where an initial stand-alone SSD system has already been installed and has failed to achieve adequate radon reductions. Marginal or poor sub-slab communication, and very high radon concentrations in the soil gas, are the conditions most likely to create a need for a BWD component.

In the former situation, where the possible need for the supplemental BWD pipes is recognized prior to mitigation, the prior experience may suggest which walls could need treatment. These could include, e.g., the wall beside an adjoining slab-on-grade garage, or the wall the deepest below grade in a walk-out basement. In some cases, selected pre-mitigation measurements (radon grab samples drawn from inside the block cavities) might aid in the selection of a wall to receive a BWD pipe. Walls having pre-mitigation radon concentrations greater than some value would be selected for such direct treatment, because that wall thus appears to be a particularly important entry route.

But there can be a problem with selecting walls based upon radon measurements in the cavities prior to mitigation. The radon level in the wall is not necessarily a good indicator of whether the SSD system will adequately prevent entry of that radon into the wall; the SSD system might take care of that wall without a BWD component. Only in the unusual case where radon levels inside the wall are higher than those under the slab, can one confidently conclude from such pre-mitigation measurements that there is an important source of radon into that wall in addition to the sub-slab region. Where that is the case, treatment of the sub-slab alone will probably not adequately treat that wall.

In the case where an initial SSD system is not doing the job, radon grab sampling inside the wall cavities with the SSD system operating would indicate which walls are not being adequately treated by SSD. These would be the walls selected to receive BWD pipes.

Selection of the walls that must be treated—BWD as a stand-alone system. Where individual-pipe BWD is intended as a stand-alone mitigation option, it will sometimes be necessary to treat every block wall which penetrates the slab. This situation will arise when all of the walls are important entry routes, and where stand-alone BWD has been selected rather than SSD, e.g., because of poor sub-slab communication, or because it is otherwise expected that SSD will not adequately treat the walls. In this situation, the need to treat each wall results because the high flows through the walls will reduce the extension of the suction and flow fields from one wall to the next, and because the suction field will not always reliably turn the corners.

In other cases, stand-alone BWD will be selected because one or two of the walls appear to be the primary entry route for the radon into the house. In these apparently limited cases, it can be sufficient to treat only those specific walls (Mes92).

In cases where all walls are important entry routes, it will be necessary to treat:

- Each of the four perimeter foundation walls. Even a perimeter wall that is largely above grade (such as the above-grade wall in a walk-out basement) should generally be treated; it can still be serving as a conduit for soil gas from the footing up into the basement, even though there is no soil in contact with the above-grade portion of its exterior face.

- Each segment of each perimeter wall, in cases where a discontinuity in the wall divides it into segments.

- Any interior block wall which penetrates the slab, e.g., a load-bearing wall perpendicular to the front and rear walls, dividing the basement into sections.

- Any interior block structure, such as a structure housing a fireplace in the basement, or supporting a fireplace on the floor above.

Where there is a slab-on-grade or crawl-space wing adjoining the basement, the block foundation walls associated with that adjoining wing may also need to be treated, especially in cases where the void network in the walls for the adjoining wing does not link with the network in the basement walls.

Indoor vs. outdoor locations. In most cases in basement houses, the individual BWD suction pipes are installed into the wall from inside the basement, as illustrated in Figure 5. Indoor installation is generally simpler, at least when the basement is not significantly finished, and it minimizes the piping visible from outdoors. Where the BWD pipes are supplementing an interior SSD system, the BWD pipes will always be indoors, so that they can easily be tied into the SSD piping. The BWD pipes treating interior walls and structures will necessarily always have to be indoors.

However, when a basement in heavily finished (and when any SSD pipes are also installed from outdoors), the BWD pipes for the perimeter foundation walls can be installed into the blocks from outdoors. Exterior installation would mean drilling into the block cores from outdoors rather than indoors. It would require excavating beside the exterior face of the basement wall to expose the exterior face of the blocks at the location where the BWD pipe is to be installed. If the pipe is to penetrate the wall near the footing, this could mean an excavation as deep as 5 to 8 ft. The individual exterior BWD pipes installed in this manner around the perimeter of the house could be extended vertically upward to near grade level, and manifolded together via a horizontal loop of piping buried just below grade level around the perimeter. Any exterior SSD pipes (penetrating horizontally through the foundation wall below slab level) could also be connected to this same piping network.

Other considerations for pipe location in basements. When individual BWD pipes are being installed from inside a

US EPA ARCHIVE DOCUMENT

basement, some of the other considerations in selecting pipe location will be similar to those discussed in Section 4.2.1 regarding the location of interior SSD pipes. These other considerations include: location of the pipes in unfinished or inconspicuous areas where possible; location of the pipes in an effort to minimize interference with occupant traffic patterns (which should not usually be a problem) or with occupant usage of the space; location of the pipes to facilitate manifolding of the multiple pipes together, in cases where they cannot be tapped into an immediately adjacent SSD pipe; and location of the pipes away from any utility lines which may occasionally be inside the block cores (such as electrical conduits leading to electrical outlets in the block wall).

Considerations for slabs on grades. Where individual BWD pipes are installed in a slab-on-grade house, they will be installed horizontally into the cores of the foundation stem wall from outdoors, near grade. In essentially all cases where BWD pipes have been installed in a slab-on-grade house, they have been installed in conjunction with SSD pipes also being installed horizontally through the foundation wall from outdoors. In such cases, it would appear logical to install the BWD pipes into the block cores just below the slab, at the same level as the SSD pipes. Such BWD pipes might be expected to have the greatest benefit on foundation stem walls which are largely below grade. In cases where the stem wall comes above grade because the slab is above grade, the amount of outdoor air drawn through the exterior face of the block will probably be increased.

7.2.2 Baseboard Duct Variation

Vertical suction pipes. Where a single vertical PVC suction pipe penetrates a continuous baseboard duct, this suction pipe can be located beside the foundation wall anywhere around the basement perimeter. The location of this suction pipe can be selected for convenient routing of the exhaust piping—i.e., directly below a convenient route for an interior stack up through the living area above, or directly beside a convenient point for penetration through the band joist to an exterior stack (e.g., at the rear of the house). It can be selected in an unfinished part of the basement.

Sometimes it is desirable to install a second (and maybe a third) suction pipe into a continuous baseboard duct, because the high flows from the walls can sometimes prevent the suction field from one pipe from effectively extending through the duct around the entire perimeter. A second suction pipe should be located approximately on the opposite side of the basement from the first pipe. The exact location would be selected to avoid basement finish and other obstructions, and to facilitate the routing of the piping. If this second pipe is to be manifolded together with the first, and both directed to a single fan, the locations of the two pipes would be selected to facilitate this manifolding. If the second pipe is to be routed to its own fan, its location would be selected to facilitate the routing of a second stack up through the house, or the routing of the piping through the band joist to a second exterior stack.

Where the baseboard ducting is interrupted, so that there are two or more isolated segments of ducting around the perimeter, there will have to be a vertical PVC suction pipe located in each of these isolated segments. Within the flexibility provided by the locations and extents of the segments, these suction pipes should be installed at locations in the segments that facilitate manifolding the various pipes together, and directing them to one or two fans.

Baseboard ducting. Ideally, the baseboard ducting itself should be installed over the wall/floor joint around the entire basement perimeter, without interruption. In addition to being thus installed on all four perimeter walls and around any discontinuities in these walls, it should also be installed on any interior block wall, and around any interior block structure (such as a fireplace structure), that penetrate the slab.

Complete coverage of the entire perimeter may not be necessary for adequate radon reduction, as long as there is a significant segment of ducting along each block wall to ensure that each wall receives some treatment. Among the obstructions that can cause interruptions in the ducting are: doorways through the block wall (e.g., in walk-out basements); fireplaces built into the wall; heavy interior finish or framing; and furnaces, stairways, shower stalls, and other obstructions installed flush against (or very near to) the block wall.

The need for complete coverage of the perimeter by the baseboard duct might be questioned. The individual-pipe BWD approach applies suction only to isolated points along the walls, not continuously around the perimeter. However, most testing of the baseboard approach to date has utilized nearly complete coverage. And, in the limited testing by EPA of very high-radon houses in Pennsylvania (Sc88), even with nearly complete coverage, these houses were not reliably reduced below 4 pCi/L.

Many commercially installed baseboard duct BWD systems are installed for the combined purpose of radon reduction and basement water control (El88). Commercially available "baseboard ducting" has been on the market for basement water control for many years, prior to the current concern about radon. Where the ducting has a water control as well as a radon control purpose, the need for ducting to be installed in a contiguous length may be mandatory, so that the collected water can flow through the duct, around the perimeter, to a sump for discharge.

With interior block walls, where both faces of the wall are accessible, installing the baseboard duct on just one face might sometimes be sufficient. If the interior wall separates a finished portion of the basement from an unfinished area, the duct would conveniently be installed on the unfinished side.

By the very nature of the system, the baseboard duct is installed over the wall/floor joint inside the basement. The suction on the wall—through holes drilled through the wall a few inches above the slab, enclosed within the duct—is thus applied at the base of the wall. Applying the suction at this location: a) increases the potential that the BWD system will develop a suction field under the slab, creating a SSD component; b) increases the suction in the block cavities near the footing, where much of the soil gas likely enters the void network; and c) reduces the height to which the system will draw soil gas up into the wall, as discussed in Section 7.2.1.

US EPA ARCHIVE DOCUMENT

Where the baseboard duct is also used for water drainage, and where a sump is thus also enclosed within the system, suction on this sump increases the SSD component of the system.

7.3 Selection of Suction Pipe Type and Diameter

7.3.1 Individual-Pipe Variation

Type of piping. As with SSD and DTD systems, the type of piping typically used for individual-pipe BWD systems is rigid thin-walled or Schedule 40 PVC, PE, or ABS piping.

Pipe diameter—BWD as a supplement to SSD. The selection of the pipe diameter is influenced by the very high air flows that BWD pipes will draw out of the walls. In the large majority of cases, the substantial friction loss in the piping, combined with the high flows, will result in quite low suctions in the block voids, even when the 90-watt tubular in-line fans are employed.

In the most common case, where individual BWD pipes are installed as a supplement to a SSD system and are connected to nearby vertical SSD suction pipes, reducing the diameter of the BWD pipe is one common option for restricting flows out of the walls. See Figure 34A, and the discussion in Section 7.5.1 regarding the need to restrict flows out of the walls in combined SSD+BWD systems. In the typical case illustrated in Figure 34A, the vertical SSD pipe is the usual 4 in. diameter, but the horizontal BWD pipe is 2 in. diameter.

However, as shown in Figures 34B and 34C, 4-in. piping can also be used for the BWD leg in combined SSD+BWD systems. Where 4-in. piping is used, a damper or valve is commonly installed in the BWD pipe to restrict the flow from the wall.

Whichever of the approaches in Figure 34 is utilized, flows from the walls are usually restricted adequately such that there is no need to use piping larger than 4 in. for the remainder of the combined system. See Section 4.3.2 for discussion of the selection of pipe sizes for SSD systems.

Pipe diameter—BWD as a stand-alone system. When individual-pipe BWD is being used as a stand-alone method as in Figure 5, with no SSD component, restricting air flow from the walls is no longer an issue. For stand-alone systems, radon reduction performance will likely be improved if the wall flows are increased as necessary to achieve adequate suction field distribution in the void network. Thus, piping of adequately large diameter should be selected.

EPA's limited experience with stand-alone BWD systems indicates that, with a 90-watt fan and 4-in. diameter individual suction pipes in each wall, the flow in each pipe will typically be no more than about 50 cfm, sometimes less. At that flow rate, 4-in. piping can be used for the individual suction pipes into the walls without suffering an unacceptable suction loss, especially since any one suction pipe will probably extend no more than 10 or 20 ft from the wall to a central trunk line (collector) running down the center of the basement. From Figure 13, friction losses between the wall entry point and the trunk line would be on the order of 0.05 in. WG or less under these circumstances.

However, that central collector pipe will carry the combined flow from all of the individual wall pipes, and can thus see particularly high flows. With 4-in. piping, the maximum flow that would be generated by a 90-watt "270 cfm" tubular fan is about 180 cfm, as discussed in Section 4.4.1. With 6-in. piping, flows as high as 200 cfm have been observed in BWD systems.

At 180 cfm, the central collector pipe could sustain a friction loss of about 0.75 in. WG down a 30- to 40-ft-long basement if the collector were simply a straight length of 4-in. piping (from Figure 13). This loss would cause the fan to operate at a different point on its performance curve, significantly reducing the total system flows well below 180 cfm. As a result, the suctions that would be being maintained in the walls would decrease significantly.

Thus, in the EPA installations, 6-in. diameter piping was consistently used for this high-flow central collector. With a straight 6-in. collector 30 to 40 ft long, the friction loss would be only about 0.1 in. WG at 200 cfm. Accordingly, Figure 5 shows a 4-in. diameter wall suction pipe connecting to a 6-in. trunk line.

7.3.2 Baseboard Duct Variation

Vertical suction pipes. Commonly, the vertical suction pipe that penetrates the baseboard duct and extends up to the fan is PVC (or comparable) piping.

Some early research installations used sheet metal ducting extending up the basement wall for this purpose, in order to increase the cross-section and thus reduce suction losses. However, such sheet metal ducting is more difficult to install and is difficult to seal effectively. It does not provide a sufficient reduction in friction losses to compensate for these complications. Thus, use of PVC piping is now recommended.

Where a single vertical suction pipe is used to draw suction on the baseboard duct at one location around the perimeter, experience suggests that flows in this pipe can be roughly 100 cfm or more. (Exact flows will depend upon a variety of variables.) This flow is lower than the values that are sometimes seen in the trunk line of individual-pipe BWD installations (up to 200 cfm), because of the friction losses encountered inside the baseboard duct. At 100 cfm, 4-in. diameter piping can probably be used, especially if the total piping run is only about 30 ft (e.g., extends relatively straight up from the basement slab to the exhaust point at the roof). In this case, the total suction loss would be on the order of 0.2 in. WG, an amount that could usually be handled by a 90-watt fan.

Where a second or third suction pipe tap into the baseboard duct, 4-in. piping may still be sufficient, depending upon how the piping is routed. If the piping connects directly to a second fan, essentially identical to the first pipe, then 4-in. piping could again be adequate. If the piping from the second suction pipe is going to be directed across the basement to manifold into the first fan, 4-in. piping might again be sufficient for the

US EPA ARCHIVE DOCUMENT

roughly 20- to 40-ft piping run across the basement, assuming again a flow of about 100 cfm or less. But where the first and second pipes come together, the combined flow could become significantly greater than 100 cfm. Thus, 6-in. piping could be warranted downstream of the junction, including for the exhaust stack.

Because the high flows could sometimes warrant 6-in. diameter piping, Figure 35 shows all of the PVC piping as 6-in. piping.

Baseboard ducting. In most commercial BWD/baseboard duct installations, the base-board ducting consists of commercially available, pre-fabricated ducting composed of vinyl, ABS, or similar material. This commercial ducting, which has been marketed for years for basement water control purposes, is commonly sealed to the wall and slab using an epoxy adhesive. Figure 35 illustrates one version of such commercial ducting.

The commercial ducting shown in Figure 35 has a bottom that curves back toward the wall, and is cemented directly on top of the wall/floor joint. This configuration creates a vinyl channel inside the ducting, which can be helpful in channelling any water which enters the duct. Commercial channel drains for water control would normally be considered for houses which do not already have a perimeter channel (or canal) drain in the form of a 1- to 2-in. wide wall/floor joint. The particular commercial drain shown in the figure would be a reasonable choice in cases where there is not a pre-existing perimeter canal.

However, when a baseboard duct system is being considered for radon mitigation, there may be cases where the baseboard approach may be of interest in part because a perimeter canal drain does already exist. In such cases, a commercial channel drain having the cross-sectional configuration in Figure 35 would cover the canal, interfering with drainage into the canal and with extension of the baseboard duct suction field into the sub-slab region. Thus, where there is a pre-existing perimeter canal drain, one may wish to use a commercial channel drain that attaches to the slab a couple inches away from the wall, in order to leave the canal open.

In some custom installations, the baseboard ducting has been fabricated by the mitigator using sheet metal. The sheet metal duct would be attached to the wall and slab using masonry screws and caulk. The metal duct can be fabricated to create either a rectangular or a triangular cross section when attached to the wall. Fabrication of the ducting out of sheet metal has the advantage of enabling a much larger cross-sectional area inside the duct than is available with the relatively small commercial ducting, thus reducing friction losses. However, custom fabrication and installation of sheet metal ducting is more difficult and time-consuming than is the use of the commercially available ducting, and hence will usually be much more expensive. In addition, because it is larger and is not pre-fabricated, the metal ducting will have a greater aesthetic impact.

Commercially available baseboard ducting is typically fairly small. It is commonly only 4 to 5 in. tall. As illustrated by the example in Figure 35, it has a cross section that is not quite rectangular, creating an enclosure extending an average of perhaps only 1 in. out from the wall. Thus, when attached to the slab and wall, this ducting will have a cross sectional area of 4 to 5 in^2 (equivalent to a round pipe having a diameter of roughly 2.5 in.). Given the high flows that will come from the walls, the suction loss inside this duct will be substantial; the ducting was designed to channel water and to be aesthetic, not to move air. The friction loss will significantly reduce the suction that can be maintained in the duct, and the amount of air that can be drawn out of the walls, unless one or more additional suction pipes are installed into the duct. However, since this low suction will be distributed around the entire perimeter by the ducting, and since the wall/floor joint, a major entry route, will be largely or entirely enclosed and depressurized, albeit to only a low level, these features may help compensate for the low level of the suction.

Custom installations have utilized sheet metal ducts having much larger cross sections, from 12 to 36 in^2 (Sc88). The cross sectional area in these ducts would be equivalent to that in a round pipe having a diameter of 4 to 6.75 in., greatly reducing suction loss compared to that in the commercial ducting. However, the larger ducts have a much greater aesthetic impact, as well as being more difficult to fabricate and install. And even with the larger baseboard ducting, the pressures inside the ducting (with the system operated to pressurize the wall) were only 0.002 to 0.38 in. WG (and flows were 0.2 to 96 cfm), depending upon proximity to a fan (Sc88, Fi91).

7.4 Selection of the Suction Fan

With either the individual-pipe or the baseboard duct variations of the BWD approach, the high air flows expected from the walls will generally dictate that the fan be at least comparable to the 90-watt in-line tubular fans listed in Table 1. These fans can move up to 270 cfm at zero static pressure, although their practical maximum in BWD systems will probably be about 180 to 200+ cfm, depending upon the size of piping used. These fans will often be able to maintain adequate suctions at the wall suction hole, at the air flows encountered and with the suction losses encountered in the piping.

As discussed in Section 4.4, the 90-watt in-line tubular fans (Section 4.4.1) are generally recommended for stand-alone SSD systems having good to poor sub-slab communication. Higher-suction blowers (Sections 4.4.2 and 4.4.3) can be an appropriate alternative when communication is marginal to poor, and the smaller (50- to 70-watt) in-line tubular fans (Section 4.4.1) will sometimes be suitable when communication is good but flows are not excessively high.

When the SSD system is supplemented with a BWD component, the flows from the combined SSD+BWD system will tend to be higher than those from stand-alone SSD systems. This can be true despite the fact that steps have been taken to restrict air flows out of the walls, as illustrated in Figure 34. Because of these higher flows, the 50- to 70-watt tubular fans will generally not be a good choice for such combined systems. Likewise, flows will very likely be too high for the high-suction/low-flow fans (Section 4.4.3). And flows will

US EPA ARCHIVE DOCUMENT

likely be high enough such that the radial blowers (Section 4.4.2) would not be generating the higher suctions which is the primary incentive for their use. Accordingly, the 90-watt tubular fan will probably often be the logical choice for a combined SSD+BWD system.

With stand-alone BWD systems, total flows from the systems (when 90-watt fans are used) are usually on the order of 100 to 200 cfm, depending upon the pipe size. Suction in the system piping immediately beside the walls is usually 0.1 to 0.4 in. WG or less, sometimes significantly less. Under these conditions, it is recommended that the fan always have a capability at least equal to that of the 90-watt in-line fans. In some cases, where the BWD system includes only a single fan, one of the high-flow 100-watt fans listed in Table 1 (with 6-in. or even 8-in. couplings) might be considered.

In some of EPA's research installations with the baseboard duct BWD variation, it has been found to be desirable to add a second 90-watt fan, in order to maintain adequate suctions and flows in the duct around the entire perimeter. An additional benefit of the second fan was that where there were multiple isolated segments of baseboard ducting, it was sometimes easier logistically to route the suction pipes from the segments on one end of the house to a second fan, rather than attempting to manifold all pipes to a single fan. This second benefit could also sometimes warrant a second fan in individual-pipe BWD installations, when it is not practical to run a single 6-in. collector pipe down the center of the basement to direct the combined flow from all of the individual wall pipes to a single fan. In any case, one or more of the suction pipes (from one side of the house) would be directed to one of the fans, and the remaining suction pipes (from the other side) would be directed to the second fan.

7.5 Installation of Suction Pipes Into the Block Walls

7.5.1 Individual-Pipe Variation

A hole of the same diameter as the BWD suction pipe is prepared through one face of a block at the location where the individual pipe is to be installed. This hole would expose the cavity inside the particular block, and would *not* penetrate all the way through to the other side of the wall. This hole would be drilled through the inside face of the block wall, inside the basement, in cases where the BWD pipes are to enter a basement wall from indoors. Or, it would be drilled through the outer face of the block, from outdoors, if the pipe is to enter a basement wall or a slab-on-grade foundation stem wall from outside the house.

The hole would be positioned on the selected block so that it penetrated the face at the location of a cavity. That is, it would not at the location of one of the block's interior cross members. To judge the proper location, one must identify whether the blocks in that wall have two interior cavities, or three. Often, the top of some blocks will be exposed at some point around the basement, revealing how many cavities the blocks contain.

Commonly, a rotary hammer is used to prepare the hole into the block, by drilling a series of 1/2-in. holes in a circular pattern having the diameter of the BWD suction pipe. Because the block face over the cavity is thin, and because the concrete/aggregate mix used to fabricate the blocks is less dense than is solid concrete, drilling holes through the face of blocks with a rotary hammer is much simpler than is drilling such holes through a 4-in. thick concrete slab, as discussed in Section 4.5.1.

The BWD suction pipe is inserted horizontally, partway into the block cavity. After this pipe is supported by connection into the remainder of the piping network (as illustrated in Figure 5 or 34), the gap between the block face and the pipe, around the pipe circumference, must be sealed. Gun-grade (non-flowable) polyurethane caulk should be worked into the gap to form a good seal. If this gap is not sealed, air will leak through the gap, reducing the effectiveness of the BWD system. Because this gap will be immediately beside the suction pipe, it will potentially have a greater impact than will other unsealed openings in the wall.

When individual BWD pipes are connected into a SSD system, it is usually necessary to restrict the air flows out of the wall, using a technique such as those illustrated in Figure 34. The reason for restricting the wall flow into the SSD+BWD system is that high flows from the BWD pipes would significantly reduce the suction that could be maintained in the system, including the SSD pipes. Thus, failure to restrict the wall pipes would significantly reduce the treatment of the sub-slab by the SSD system.

Of course, restricting the BWD pipes in this manner dramatically reduces the treatment of the walls. As discussed in Section 2.3.4, tests of such combined SSD+BWD systems have commonly shown that the optimum approach in these cases is to restrict the BWD flows, sacrificing some part of the wall treatment in order to maintain effective sub-slab treatment.

One of the simplest, least expensive, and more widely utilized methods for restricting wall flow is to use smaller diameter piping for the leg extending into the wall. Figure 34A illustrates this approach, for the case where 2-in. pipe has been used for the wall and where the vertical SSD pipe is 4 in. diameter. For this configuration, 4-in. T fitting is installed into the SSD riser adjacent to the wall hole, with the leg of the T pointed horizontally toward the wall. A 4- to 2-in. adaptor at the end of the T leg narrows down to accommodate the 2-in. pipe that then extends horizontally into the wall cavity. Because of the substantial suction loss in even such a short length of 2-in. piping, the use of the small-diameter piping significantly reduces the flow out of the wall into the system.

Figure 34B shows the option of using 4-in. pipe for the wall leg, and of installing a damper in the leg to allow restriction of flows from the wall. Dampers are relatively inexpensive, and would enable adjustment of wall flows after installation in an effort to optimize system performance. However, some mitigators have reported that dampers are not always reliable (Kl92).

Use of a PVC ball valve, as illustrated in Figure 34C, also permits adjustment of flows after installation, and offers the further advantage of being more reliable than the use of a damper. However, PVC valves are relatively expensive.

7.5.2 Baseboard Duct Variation

Vertical suction pipes—where no sump is present. Some manufacturers of channel drain market a specially designed segment of baseboard ducting, designed to easily accommodate a vertical PVC suction pipe. Such a segment would be installed into the baseboard loop at the one or more locations where a vertical PVC suction pipe is to be installed into the baseboard ducting. The suction pipe would then be cemented into the fitting in this segment, providing an air-tight seal. Where such connection segments are available, this would be the preferred approach for connecting the suction pipe into the baseboard.

Alternatively, as illustrated in Figure 35, a hole could be cut in the baseboard ducting to accommodate the suction pipe. The pipe is installed vertically, almost flush against the foundation wall, fitting into the hole cut in the ducting. At the base of the vertical pipe, against the slab, a section of the pipe within the ducting would be cut away, providing an opening between the suction pipe and the interior of the baseboard ducting.

By this latter approach, the junction between the PVC suction pipe and the baseboard ducting would then have to be sealed very well, with gun-grade polyurethane caulk or other appropriate sealant. The base of the vertical pipe, where it rests on the slab, would have to be effectively sealed against the slab with polyurethane caulk. Alternatively, an end cap could be cemented onto the base of this pipe. And the seam between the pipe and the baseboard duct must be sealed.

Unlike vertical SSD pipes, where the pipe penetration through the slab tends to anchor the pipe against lateral movement caused by physical impact, the vertical suction pipe in baseboard duct BWD systems is resting on top of the slab, and has only the caulk bead at its base to prevent lateral movement. This pipe should be attached firmly to the wall using brackets, in order to reduce the risk that it will be jarred and the seals at its base broken.

Vertical suction pipes—where a sump is present. The preceding discussion addresses the case where the baseboard duct does not connect to a sump. Where there is a sump, the vertical suction pipe can be installed in the capped sump, rather than as described above.

In many cases, commercial baseboard duct systems are installed for the combined purposes of basement water control and of radon reduction. The need for water control may often be a factor in the decision to install a baseboard duct BWD system in the first place. Where water control is also an objective, a sump and sump pump will commonly have to be retrofit into the house as part of the system, to handle the collected water. (The need for water control and for a retrofit sump will usually not exist in houses having a pre-existing perimeter channel (canal) drain.)

An added concern is that when holes are drilled through the interior face of the block wall near the slab, basements that did not originally have a serious water problem may begin to have one. Water flowing through the block cavities during wet periods, which previously might have drained largely to the sub-slab region via the base of the wall, might now flow into the baseboard ducting through the holes. To avoid claims that the mitigation system has negatively impacted the drainage features of the house, it might sometimes be advisable to install a sump and sump pump system as an integral part of the baseboard duct system, to handle any such drainage in cases where water problems might occur.

Figure 36 illustrates an approach used by one vendor in cases where combined water control and radon mitigation are to be achieved with a baseboard duct system and a retrofit sump (EI88). In this configuration, a single PVC pipe serves both as the conduit for collected water from the baseboard ducting to the sump, and also as the pipe by which suction is drawn on both the baseboard ducting and the sump. To install this pipe and the new sump, of course, a section of the slab would have to be removed and then restored after installation. The sump must be fitted with an air-tight cover, as discussed in Section 5.5.2.

In other cases, the baseboard ducting might connect to the sump by a configuration other than that shown in Figure 36. In such other cases, it might sometimes be preferred for the suction pipe to penetrate the sump cover, in a manner such as illustrated in Figure 33 and discussed in Section 5.5.2.

An installation such as the one in Figure 36 has a major SSD component by virtue of the suction on the sump. This SSD component can be more important than the BWD component.

Baseboard ducting. Prior to the installation of the baseboard ducting, holes of about 1/2 in. diameter are drilled through the interior face of the blocks, into the cavities, at all locations where the ducting is to be installed. These holes would usually be in the first course of block above the slab, within 4 in. of the slab, so that the will be enclosed within the baseboard ducting. These holes permit the suction from the depressurization system to extend into the void network uniformly around the perimeter. In EPA's testing of baseboard duct BWD systems (Sc88), as well as in commercial systems (EI88), such holes have usually been drilled into every cavity of every block.

No attempt should be made to seal the wall/floor joint at locations where the baseboard ducting will be installed over the joint. Leaving the joint open will facilitate the extension of the ducting suction down into the sub-slab region, increasing any SSD component of the system. Where the baseboard does not cover the entire length of the wall/floor joint, and where that joint is a 1- to 2-in. wide perimeter channel drain, the channel drain opening beneath the baseboard must be sealed in some appropriate manner at the point where the baseboard ends, so that basement air is not drawn into the baseboard duct through the open perimeter channel drain beneath the end of the baseboard.

US EPA ARCHIVE DOCUMENT

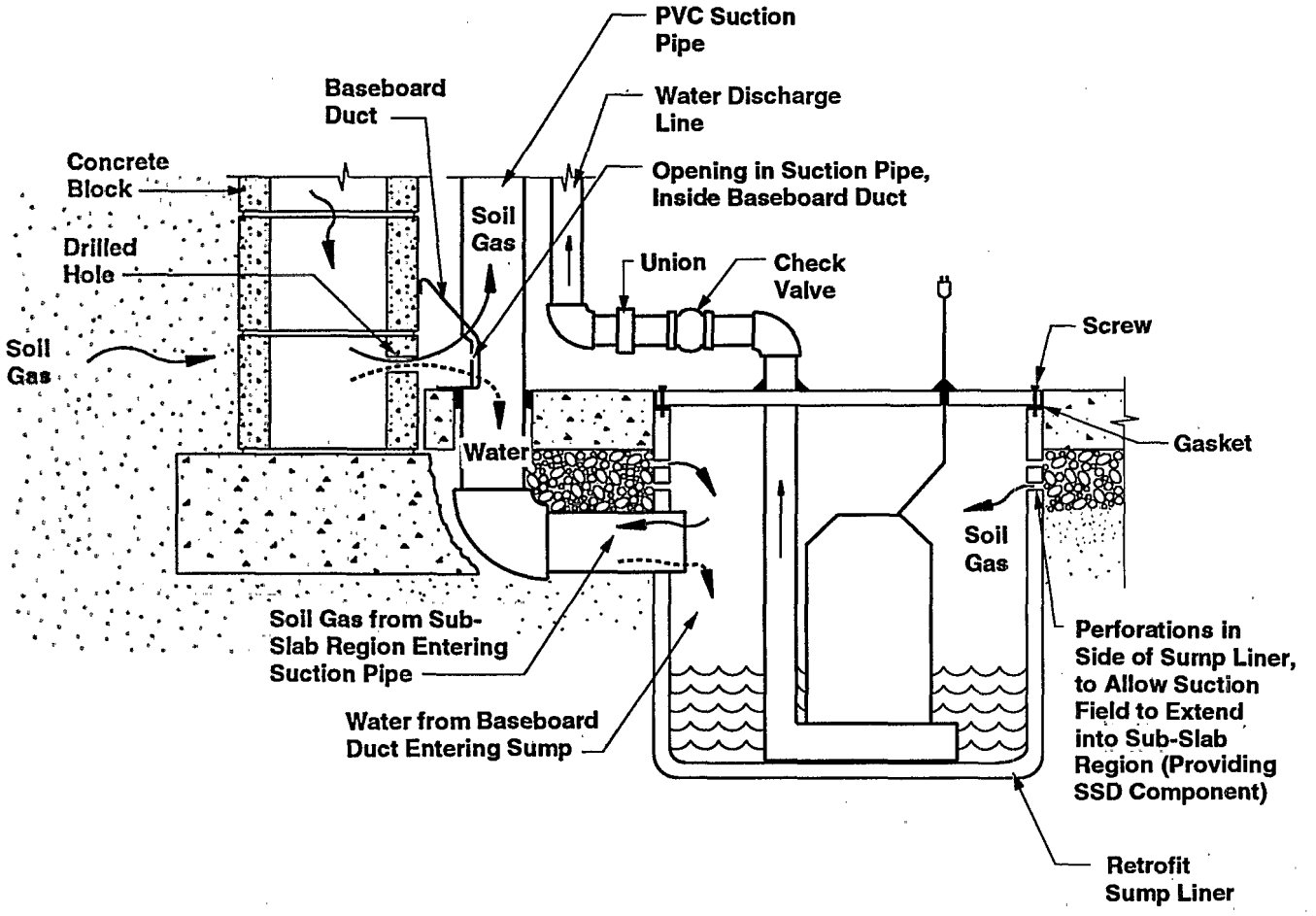

Figure 36. One specific example of a baseboard duct BWD configuration with a major SSD component, for the case where a sump and sump pump are installed as part of the radon mitigation system. (Safe-Aire, Inc.)

The baseboard ducting must be attached to the slab and wall, forming an air-tight seal over the wall holes and the wall/floor joint. Where commercially available vinyl or ABS ducting is used, the ducting is usually bonded to the wall using epoxy or other adhesive. The surface of the wall and slab should be cleaned and abraded first, to improve adhesion. If sheet metal ducting were used, the metal ducting would be anchored to the wall and slab with masonry screws, through flanges incorporated into the ducting for this purpose. The metal ducting would be sealed against the wall and slab with a continuous bead of gun-grade polyurethane caulk between the flange and the concrete. The masonry screws alone would not provide an adequate seal. When the slab contains irregularities, special care and additional caulking will be needed to ensure a good seal.

Commercially available ducting is marketed in pre-fabricated 5- to 10-ft lengths. Butt-joint fittings, having the same cross-sectional configuration as the ducting, are used (with sealant) to join lengths of straight ducting. Special pre-fabricated sections of ducting can sometimes be obtained to turn inside or outside corners. Where these corner sections do not form an integral piece, the mitered junction at the corner must be sealed carefully. Where the ducting must be interrupted, end-cap fittings are available to seal the open end. As indicated above, where the baseboard ducting is being sealed over a perimeter channel drain, the gap between the open drain and the base of the baseboard must be sealed at ends.

US EPA ARCHIVE DOCUMENT

When the lengths of baseboard ducting are custom fabricated out of sheet metal, more care will be required in sealing the seams using sheet metal screws and polyurethane caulk. The butt-joint and end-cap fittings, and the pre-mitered corner sections, will not be available, and these junctions will have to be formed and sealed on site.

When the baseboard is also going to collecting water, a particular effort is needed to ensure that the baseboard forms a contiguous loop (at least a "C," if not a complete "O"). Continuous ducting is needed so that the collected water can drain to a single sump. In these cases, it may be necessary to move some obstructions, or to penetrate through an interior stud wall which extends perpendicular to the block foundation wall. If part of the basement is finished, the baseboard ducting can sometimes still be installed, by trimming of the base of the panelling and underlying furring strips, and by trimming any carpeting, to accommodate the baseboard. (Where the finish against the foundation wall is a stud wall, this approach would not be practical.)

The holes that are being drilled through the face of the basement wall will permit any water that ever flows through the wall cavities to drain out into the baseboard ducting. Prior to the drilling of these holes, much of the water that might have entered the cavities might have drained to the sub-slab region. Thus, if it is thought that the house might have a drainage problem (based upon the contour of the lot, the appearance of the walls, and the occupant's experience), a sump should be installed in conjunction with the baseboard duct system. If there is an existing sump, it could be connected to the baseboard ducting.

If the wall/floor joint is a perimeter channel (canal) drain, it might drain to an existing sump via a loop of drain tiles under the slab. See Figure 32B. In these cases, the perimeter channel drain is enclosed within the baseboard ducting, using a baseboard duct configuration that does not interfere with drainage into the perimeter canal (see Section 7.3.2, *Baseboard ducting)*. The sump should be capped with an air-tight cover, to prevent excessive air flow through the drain tiles into the baseboard duct system (as well as to reduce radon entry into the house via the sump).

If the wall/floor joint is *not* a perimeter channel drain, but there is an existing sump, a channel could be routed through the slab, directing water from inside the baseboard ducting to the sump. This would be analogous to the approach illustrated in Figure 32B, for the case where a perimeter channel drain is sealed. If a channel were routed, it must be covered with, e.g., Plexiglass sheet, sheet metal, or a length of PVC piping cut in half down its axis. In this case, it could be desirable for the sump cover to rest on top of the slab (rather than below slab level, as in Figure 32B), so that the sump end of the routed channel could be enclosed under the sump cover. The seams between the channel cover, the sump cover, and the baseboard ducting must be sealed well. The baseboard ducting, the slab channel, and the sump should form one completely enclosed unit on which suction can be drawn, with water flow through the perimeter drain and into the sump unimpeded.

If there is no sump initially, one can be installed as part of the combined radon mitigation/basement water control system. One option for doing this was illustrated in Figure 36. Polyurethane or polyethylene sump crocks can be purchased for this purpose, with the top molded (and with bolt holes provided) to accommodate a gasketed, air-tight sump cover that is sold with the crock.

Installation of a sump will require removal of a section of the slab near to the foundation wall with a jackhammer, excavation of a pit at that location to accommodate the sump crock, and restoration of the slab. If a PVC pipe is installed into the side of the sump crock to baseboard water into the sump and to enable suction on the sump and baseboard, as illustrated in Figure 36, a portion of the footing might also have to be chipped away, as shown, to make room for the pipe. After the sump crock and the PVC pipe are mounted in place, the excavation is back-filled with material that was excavated, with a layer of crushed rock on top, and new concrete poured to restore the slab.

While the new concrete is still soft, a groove perhaps 1/2 in. deep is tooled around the perimeter of the slab hole, where the new concrete meets the original slab. A groove is also tooled around the perimeters of the sump crock and of the PVC pipe where it penetrates the new concrete, and along the wall/floor joint (if the slab hole extended all the way to the foundation wall). When the concrete has set, these grooves will be flooded with flowable urethane caulk, in an effort to keep these seams gas-tight.

7.6 Design/Installation of the Piping Network and Fan

The design and installation of the piping network and fan for BWD systems would be essentially the same as described in Section 4.6 for a SSD system.

In a stand-alone BWD installation utilizing the individual-pipe variation, where multiple individual 4-in. BWD pipes penetrate into the cavities of different walls, it is advisable that the individual 4-in. pipes from each wall connect to a 6-in. diameter collector pipe, due to the volume of the combined flows. When the wall penetrations are made from inside the basement, this 6-in. trunk line would usually run down the center of the basement. If the penetrations are from outdoors, the trunk line would form a loop around the house perimeter. Where a continuous trunk line is not feasible, two trunk lines could be used, each potentially leading to a separate fan. Some of the individual 4-in. suction pipes would connect to one of the trunk lines, some would connect to the other.

Sometimes, two fans will be installed in stand-alone BWD installations, as discussed in Section 7.4. A second fan may be installed when there is a second trunk line in an individual-pipe installation, as discussed in the preceding paragraph.

A second fan may be installed in a baseboard duct installation when a second suction pipe is installed into the baseboard ducting loop on the opposite side of the basement from the first. A second suction pipe and fan would usually be considered for baseboard systems primarily in cases where there is

US EPA ARCHIVE DOCUMENT

no sump adding a major SSD component to the baseboard system.

When two fans are used, each fan and exhaust system would be installed as an independent unit, with all of the considerations discussed in Section 4.6 applying to each one.

Because of the large air flows drawn from the block walls by stand-alone BWD systems, the radon concentration in the exhaust is usually much lower than that observed from SSD systems. This could impact decisions on design of the exhaust piping.

The suction pipes leading to the fans will be 6 in. diameter in some cases, as discussed in Section 7.3. As indicated in Section 4.6.2, where a pipe penetrates the band joist (which is supported underneath by the foundation wall), at least 2 in. of wood must always remain between the hole and both the top and the bottom of the joist. Thus, the 6-in. suction pipe could be installed through a 2- by 10-in. band joist, provided the hole is cut exactly in the center of the joist. A 6-in. pipe could *not* be installed through a 2- by 8-in. band joist. And a 6-in. pipe could *never* be installed through floor joists which are not supported underneath. For such unsupported members, the rule is that the diameter of the hole must not be greater than one-third the height of the member; a 6-in. hole would be more than one-third the height of a typical 2- by 10-in. joist (or even of a 2- by 12-in. joist).

7.7 Wall and Slab Sealing in Conjunction with BWD Systems

Sealing of major block wall openings can be crucial in the application of BWD systems. The block walls are inherently leaky, and significant amounts of air will leak into the BWD system regardless of the sealing effort that is undertaken. However, failure to close certain major opening (such as the open voids in the top course of block) can result in such excessive air leakage that the ability to the BWD system to treat the wall can be compromised.

It is also recommended that major slab openings be sealed. A stand-alone BWD system can sometimes extend a weak suction field beneath the slab. Failure to close a wide wall/floor joint could prevent any suction from reaching the sub-slab region. Since BWD systems will not reliably treat entry routes toward the interior of the slab, the need to seal such interior routes in conjunction with stand-alone BWD systems will be increased. With major slab-related entry routes, such as untrapped floor drains, sealing (or trapping) these major openings is generally good practice in any event, to reduce potentially significant soil gas entry if not aid in suction field extension. And finally, with some baseboard duct installations, sealing of sumps is an integral part of the installation.

7.7.1 Wall Openings

Open voids in the top course of block. One of the most crucial openings in block walls to close in conjunction with BWD is the open voids in the top course of block in the wall, in cases where the wall is not constructed with a course of solid cap block on top.

These top voids are more accessible for closure in some cases than in others, depending upon the construction features of the particular house. Inability to close the open top voids will not always render BWD completely inapplicable, but it can seriously detract from the performance of the system, and can make indoor radon levels more subject to increases when weather conditions or the usage of depressurizing appliances challenge the system. It may also increase the house heating/cooling penalty, and the risk of back-drafting combustion appliances in the basement. In addition, failure to close the top voids enables the block wall void network to continue to serve as a chimney for soil gas flow up into the house, at those locations where the BWD system is unable to adequately depressurize the cavities.

Figures 37A and 37B illustrate two approaches for closing the top voids, depending upon accessibility.

Where the dimensions of the block and of the sill plate are such that one to several inches of the open void are exposed, as in Figure 37A, there is sufficient accessibility such that the top voids can be sealed from above with mortar or with expandable closed-cell, one- or two-component urethane foam. To prevent the mortar or foam from dropping down into the block cavities, some suitable support can be forced down into each individual void, if necessary, leaving a depth of about 2 in. for the mortar or foam which is then applied above the support. Where codes prevent crumpled newspaper from being used as such a support, insulation material could be one suitable alternative. A rapidly expanding, quick-setting foam might be applicable without any support underneath.

If several inches of the void are exposed, mortar can be considered to close the top voids. Mortar may have a lower materials cost than foam, but will be much more time-consuming to apply. When mortar is used, it is crucial that the mortar be forced all the way to the far face of the void under the sill plate, to ensure that the entire void is closed. See Figure 37A.

When only an inch or two of the top void is exposed, there is not sufficient room to accommodate a person's hand into the void. Mortar is thus no longer an option, because it could not be reliably spread to the far face of the void under the sill plate. In these cases, expandable foams *must* be used.

Expandable foams are obtained in 12- to 24-oz. aerosol spray cans (for small jobs), or in compressed cylinders up to 16 lb. (likely required when an entire course of blocks is to be sealed). Foams can be applied directly from the can, or can be injected through a hand-held wand or nozzle connected to the container with a hose. The wand or nozzle can be inserted into the small opening accessible under the sill plate, injecting the foam in a manner which will effectively seal the entire void. The foam should initially be directed toward the far face of the void, again to ensure that the entire void is sealed.

This sealing effort must be applied to every void in the top course of block.

In the majority of cases, the dimensions of the block and sill plate will be such that less than an inch of the top void will be

US EPA ARCHIVE DOCUMENT

US EPA ARCHIVE DOCUMENT

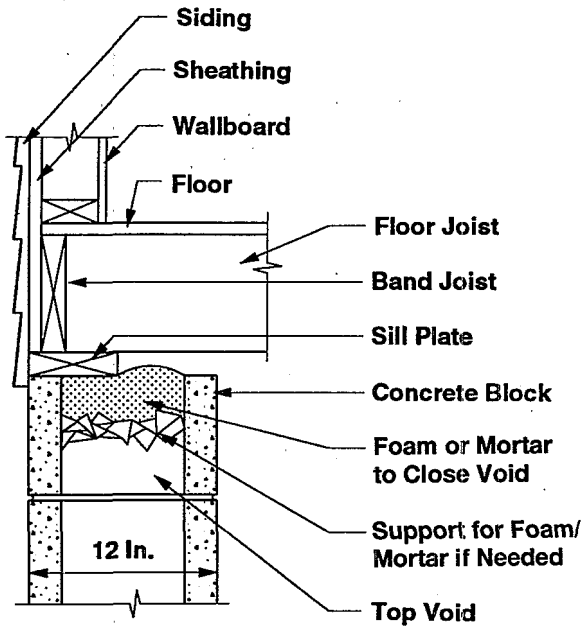

A) Closure of top void when void is reasonably accessible.

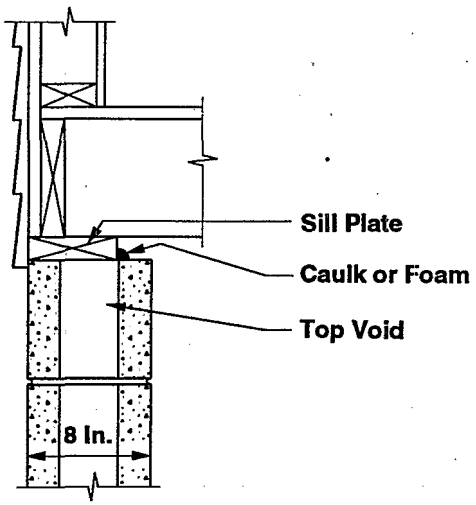

B) One option for closure of top void when a fraction of an inch of the void is exposed.

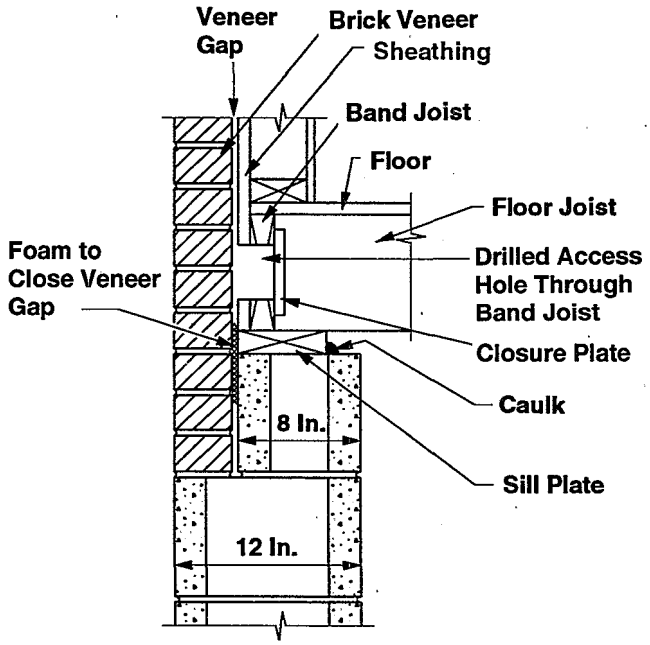

C) One option for closing gap between exterior brick veneer and interior block and sheathing.

Figure 37. Some options for closing major wall openings at the top of block foundation walls, in conjunction with BWD systems.

exposed, if any of the void is exposed at all. In such cases, it will be impractical or impossible to force support material down into the cavities. Without such supporting material, it could be more difficult to get foam to effectively close the top voids, since large amounts of foam might drop down into the cavities below. Where none of the void is exposed, there is an additional complication, in that the cavity is not accessible other than by drilling through the block face or sill plate.

Where at least a fraction of an inch of the void is exposed, a foam nozzle could be inserted into the void. If a rapidly expanding, quick-setting foam is used, it may successfully seal the entire top void, despite the lack of any support underneath. Another option might be to drill a hole into each cavity, through the face of the block just below the top of the wall; some type of support for the foam could then be inserted through this hole.

If this is unsuccessful, efforts could focus on sealing the fraction-of-an-inch opening between the sill plate and the foundation wall, as illustrated in Figure 37B. This approach seals that portion of the top void that *is* accessible, and relies upon the sill plate to serve as at least a partial cap on the portion which is inaccessible. Expanding foam applied on top of the wall, beside the sill plate, is one material that might be used to seal this gap. Or, a small strip of wood might be sealed against the sill plate and the foundation wall using beads of polyurethane caulk.

Where none of the top void is visible, foam could be injected into each top cavity through a hole drilled in the face of the block. If the foam did not expand rapidly enough to avoid dropping into the cavities below, one suggestion has been to drill a second hole below each injection hole, then inserting some type of support through the lower hole. Alternatively, the seam between the sill plate and the foundation wall might be caulked with gun-grade polyurethane caulk, in an effort to improve the ability of the sill plate to serve as a cap for the top voids.

Reliance on the sill plate as a cap for the top voids, in the manner indicated in the preceding two paragraphs, is less effective than would be successful injection of foam into the block cavities. The inaccessible outside seam between the sill plate and the block is left uncaulked, and the sill plate would thus be expected to be a leaky cap. However, use of the sill plate saves a lot of time and expense. It has seemed to be sufficient in a few of the EPA study houses in Pennsylvania where stand-alone BWD systems were tested (He87, Sc88); however, in other cases, two fans were required and/or radon levels were not reliably reduced below 4 pCi/L.

Fireplace structures. Fireplace structures incorporated into block walls offer the potential for large and inaccessible openings within the structure. For example, there may be a substantial gap between the actual fireplace insert (and the flue) inside the structure, and the blocks which form the outer walls of the structure. Such a gap could extend to above the basement, serving as a thermal and air-flow bypass to the upper levels of the house. Thus, even when the top voids in the remainder of the block foundation wall itself can be sealed, large amounts of air from the basement, the upstairs, and outdoors could leak into the BWD system via this inaccessible opening.

There is no practical way to seal such openings within fireplace structures. The fireplace/chimney structure would have to be torn down and rebuilt. Where such a structure exists, additional BWD suction pipes near the structure, and perhaps increased fan capacity, might be considered to compensate for the expected leakage. Supplementing the BWD pipes with SSD should also be considered. The EPA study houses in Pennsylvania in which stand-alone BWD systems gave the poorest performance generally had fireplace structures (He87, Sc88).

Gap associated with brick veneer. In houses having exterior brick veneer, a gap occurs between the veneer and the sheathing and block behind the veneer. This gap is depicted in Figure 37C. This gap could sometimes serve as an important source of air leakage into the BWD system, with outside air and house air being drawn down through that gap (e.g., from the eaves where the veneer ends, or from house air leakage through the sheathing on the floors above).

In an effort to seal this gap, it would be necessary to drill into the gap at intervals (probably through the band joist, as illustrated in Figure 37C), and to inject closed-cell urethane foam through the drilled holes via a hose/nozzle from a compressed cylinder.

It is not clear from available data under what conditions it will be cost-effective to try to seal the veneer gap in this manner. Reasonably good BWD performance has sometimes been achieved even in brick-veneer houses where this gap was not closed.

Major and intermediate holes through the block wall. Any major openings through the block wall must be sealed. Such major openings would include, for example, partially missing blocks in cases where there is some major penetration has been installed through the wall. Intermediate openings should also be sealed. These would include, e.g., modest gaps around utility line penetrations, chinks in the blocks, and places where significant amounts of mortar have fallen out of mortar joints.

Block pores. While the pores in the blocks are small, they cover the entire face of the wall, and hence can add up to a substantial leakage area. However, they are difficult and expensive to seal, requiring that the entire face of the wall be painted or coated. Tests have shown that the porosity of blocks can vary by an order of magnitude, depending upon how they were manufactured (Ru91). A variety of coatings can reduce this porosity by 95% or more, including, e.g., epoxy paints and cementitious block filler. With standard latex paint, three coats were found to be needed in order to reduce air-flow through the wall by more than 95% (Ru91).

If the basement were unfinished and the walls thus readily accessible, the cost of painting the walls in a typical basement was estimated to cost about $400-$1,000, depending upon the coating used, including labor and materials. This would increase the cost of a BWD installation by about 20-70%. If part

US EPA ARCHIVE DOCUMENT

or all of the basement were finished, and if finish thus had to be removed and replaced as part of the coating effort, the cost could be significantly higher.

It is not clear under what conditions it is cost-effective to try to seal the block pores, in view of the expense and potential complications involved in coating the basement walls. In the EPA testing of stand-alone BWD systems in Pennsylvania, it was not apparent that sealing of the block pores was necessary in order to get adequate BWD performance, although no definitive tests were carried out in order to quantify the benefits that such sealing would have provided. In only one of the EPA study houses, which had very porous cinder block walls, were the block pores sealed (by coating the entire interior face of the walls with a waterproofing paint).

7.7.2 Slab Openings

Perimeter channel drains. With stand-alone BWD systems, proper closure of perimeter channel drains can be even more important than it is with SSD systems (see Section 4.7.1). BWD systems will sometimes extend only a relatively weak depressurization beneath the slab. A wide gap between the slab and wall will permit so much air leakage into the system at that point that any extension of the wall suction field into the sub-slab region will probably be eliminated.

With the individual-pipe BWD approach, the perimeter channel drain should be closed as discussed in Section 4.7.1.

With the baseboard duct BWD approach, which is the BWD approach most likely to be selected when a perimeter channel drain is present, the perimeter drain will be sealed by enclosure within the baseboard ducting. Any sump associated with the perimeter channel drain will also be capped as part of the BWD installation, as discussed in Section 7.5.2 (see *Baseboard ducting).* The perimeter channel drain would *not* be caulked or mortared shut at locations where it was going to be covered by the baseboard ducting, since the open channel beneath the baseboard could add a significant SSD component to the system.

If a portion of the perimeter channel drain cannot be covered with baseboard ducting in a baseboard duct BWD installation, judgement will have to be utilized in determining how to seal this uncovered segment. Often, if it cannot be covered by the baseboard ducting, it may be too inaccessible for sealing. As a minimum, the opening in the slab will have to be sealed immediately under the end of the ducting, so that basement air will not flow through this channel into the ducting. Uncovered sections of the perimeter channel drain could be sealed using the techniques discussed in Section 4.7.1.

Wall/floor joint (when not a perimeter channel drain). Where the wall/floor joint is covered by baseboard ducting, it should always be left uncaulked, to increase the possible SSD component that the baseboard duct BWD system might provide. However, uncovered sections of the wall/floor joint should be caulked as discussed in Section 4.7.5, whenever it is wider than a hairline crack. This might be particularly important with stand-alone individual-pipe BWD systems, to help the wall suction extend beneath the slab.

Other major and intermediate holes through the slab. Other major holes through the slab, such as openings around bathtub plumbing, sections of missing slab, and other miscellaneous major openings should be sealed, as discussed in Section 4.7.2, to aid in the distribution of the BWD suction field to points under the slab remote from the walls. Likewise, intermediate slab openings, such as expansion joints and small slab holes (in addition to the wall/floor joint, discussed previously), should be sealed whenever accessible, as discussed in Section 4.7.5.

Untrapped floor drains. Untrapped floor drains should be addressed as discussed in Section 4.7.3. Trapping these drains may aid in distribution of the weak BWD suction field beneath the slab, and will prevent continued soil gas entry into the house through the drain.

Sumps. Where an existing sump with drain tiles is present in a basement, a sump/DTD system will often be the ASD approach selected for that house. Where a stand-alone BWD system is selected for a house with a sump, it will commonly be because there is a perimeter channel drain draining to sub-slab drain tiles which empty into the sump. In such cases, the baseboard duct BWD approach will often be selected, and the sump will be enclosed as part of the BWD installation, as discussed in Section 7.5.2.

If for any reason a sump exists that is not being incorporated into the BWD system, that sump should be capped with an air-tight cover.

7.8 Gauges/Alarms and Labelling

The considerations discussed in Section 4.8, concerning gauges/alarms and labelling for SSD systems, also apply to BWD systems.

Because of the high air flows from the block walls, a pressure gauge on a stand-alone BWD system can register lower suctions than gauges on SSD or DTD systems. However, if the gauge is located near the fan, and if there is a significant piping run associated with the BWD system, the gauge may still provide a reasonably high reading. Due to potentially high suction losses common in the piping for stand-alone BWD systems, resulting from the high flows, the fan will have to maintain a fairly high suction in the piping immediately beside the fan in order to maintain a relatively low suction in individual pipes near their penetration into the wall, or in the baseboard ducting.

US EPA ARCHIVE DOCUMENT

US EPA ARCHIVE DOCUMENT

Section 8
Design and Installation of Active Sub-Membrane Depressurization Systems

Where the house is built over an earthen- or gravel-floored crawl space, and where the crawl space is largely or entirely accessible, SMD is the applicable variation of the ASD technology. In effect, a "slab" of polyethylene sheeting is being laid over the exposed soil floor, and the region beneath this "slab" is being depressurized, analogous to SSD or DTD. See Figures 6 and 7.

Depressurization beneath a membrane over the crawl-space floor appears to be generally more effective at reducing radon concentrations in the living area than is forced ventilation/depressurization of the entire crawl space, and distinctly more effective than are natural ventilation and forced ventilation/pressurization of the crawl space (He92). Ventilation of the entire crawl space is less expensive to install than is SMD, although the forced ventilation approaches probably involve a greater heating/cooling cost penalty, since more treated air is likely to be drawn or forced out of the living area.

Crawl-space ventilation approaches are apparently used in about one-third of the commercial installations in crawl-space houses, rather than SMD; sealing and barriers were used in another one-third (Ho91). It is suspected that the large fraction of ventilation and sealing installations are most likely associated with: a) houses having adjoining basements, where a SSD or DTD system in the basement is providing most of the reductions, and where the crawl-space ventilation or sealing component is providing only a limited additional benefit; or b) low indoor radon levels, where crawl-space ventilation can prove sufficient.

Ventilation approaches are particularly applicable in cases where the crawl space is inaccessible. In these cases, SMD is not an option, since reasonably good access to the crawl space is required in order to install the membrane.

Less mitigation research, and fewer commercial mitigation installations, have been completed in crawl-space houses, relative to basements and slabs on grade. Thus, less definitive guidance is possible for mitigation systems in crawl-space houses.

The discussion in this section addresses only SMD in crawl spaces having bare soil floors, or floors having gravel or a plastic vapor barrier over soil. Where the crawl space has a poured concrete slab or an unfinished concrete "wash" floor, it will not be necessary to install a polyethylene membrane over the floor. SSD beneath the existing concrete will be the appropriate ASD technology, rather than SMD. The one exception might be crawl spaces with badly cracked concrete wash floors, in which case it may still be desirable to lay a membrane. To design and install SSD systems in such cases, see Section 4.

Where there is a basement or slab-on-grade wing adjoining the crawl space, that adjoining wing will often have to be treated with SSD or DTD, in addition to (or instead of) crawl-space SMD treatment. For such treatment of the adjoining slabs, see Sections 4 through 6. Occasionally, where crawl-spaces have block foundation walls, it might be necessary to supplement the SMD system with individual BWD pipes. For individual-pipe BWD supplements, see Section 7.

The discussion in this section draws heavily from the detailed review of available data on SMD systems, presented in Section 2.3.5.

8.1 Selection of the Approach for Distributing Suction, and the Number of Suction Pipes

8.1.1 Approach for Distributing Suction

Two approaches can be considered for distributing suction beneath the membrane of SMD systems.

- The mitigator can choose to insert one or more individual suction pipes through the membrane, in which case the SMD system would be analogous to SSD. This approach is referred to here as the *"individual-pipe/SMD"* approach. See Figure 6.

- Or, the mitigator can choose to install a length (or perhaps a matrix) of perforated piping beneath the membrane to aid in the distribution of the suction. In this case, the SMD system would be analogous to DTD. This approach is referred to as the *"sub-membrane piping/SMD"* approach. See Figure 7.

Another option that has been considered, analogous to the sub-membrane piping/SMD approach, has been to lay a strip of porous matting beneath the membrane. The strip of matting might be viewed as analogous to a length of perforated piping.

Some mitigators with significant experience using SMD systems routinely use sub-membrane perforated piping (An92, Kl92). Others always use the individual-pipe approach, except perhaps in large or irregular crawl spaces (Bro92, How92, Sh92).

Potential advantages of sub-membrane piping. Use of sub-membrane perforated piping should aid in the distribution of the suction field beneath the membrane. Perforated piping would thus likely be most helpful when the crawl-space floor is a packed, impermeable soil with no imported gravel on top, suggesting marginal or poor sub-membrane communication. On the other hand, it would seem that individual suction pipes (with no sub-membrane perforated piping) should most likely be adequate in cases where the crawl-space floor either consists of native gravel soil, or is covered with a layer of imported gravel, suggesting good sub-membrane communication.

An additional potential benefit of sub-membrane piping is that, by distributing the suction over a wider area, it may be more forgiving in cases where ruptures occur in the membrane. If a rupture occurs near an individual suction pipe, or a seam becomes unsealed, air short-circuiting into the individual pipe could dramatically reduce the already-limited suction field extension created by that pipe, degrading SMD performance. But if such a rupture occurs near a portion of sub-membrane perforated piping, the degradation would intuitively be expected to be less severe.

Guidance regarding the need for sub-membrane piping. Individual-pipe/SMD seems to be consistently effective in reducing living-area concentrations below 4 pCi/L in crawl spaces up to about 1,500 to 2,000 ft^2. This has been the case even when: a) the crawl-space floor is a fairly tight soil, and sub-membrane communication would thus appear to be relatively poor; and b) the membrane has not been fully sealed.

The use of perforated piping beneath the membrane is most likely to be warranted when reductions below 2 pCi/L are needed, or when the crawl space is larger than 1,500 to 2,000 ft^2. Sub-membrane piping may be beneficial even in smaller houses, increasing radon reductions when sub-membrane communication is limited. Sub-membrane piping is least likely to be needed when there is a layer of gravel on the floor.

Careful sealing of the membrane may increase the crawl space size that can conveniently be treated by individual-pipe/SMD systems, and improve their performance. In addition, multiple individual suction pipes may be a suitable substitute for perforated piping under the membrane.

To date, there has been no definitive direct comparison of individual-pipe and sub-membrane piping SMD systems back-to-back in a single house. Thus, it is not possible to quantify the benefits of using sub-membrane piping, or to specify more precisely when it will be needed.

Results to date. Many SMD installations have used the individual-pipe approach. The large majority of the individual-pipe installations have been in houses where the crawl-space floor appeared to be a packed, impermeable soil, with no gravel. But despite the implicit poor submembrane communication and the failure to use perforated piping, all but one of the EPA study houses having individual suction pipes and having crawl-space floor areas of 1,500 ft^2 and less have been reduced below 4 pCi/L in the living area with only one suction pipe. Only the two houses having floor areas of 2,000 ft^2 and greater (and no gravel) required a second suction pipe to get below 4 pCi/L, or were not reduced below that level, despite complete sealing of the membrane in one of the houses. This result would indicate that the individual-pipe approach can work reasonably well in moderately sized crawl-space houses, even when the sub-membrane communication would appear to be marginal to poor.

On the other hand, none of the "pure" crawl-space houses in EPA's study—i.e., none of the houses having only a crawl space with no adjoining wing of some other substructure type—were reduced below 2 pCi/L with individual-pipe/SMD installations. Among the study houses, only those having an adjoining basement with an operating SSD system in the basement were reduced below 2 pCi/L when an individual-pipe SMD system was installed in the crawl-space wing. The basement SSD system was believed to be, or was demonstrated to be, largely responsible for the observed reductions.

By comparison, a number of "pure" crawl spaces with sub-membrane perforated piping *have* been reduced below 2 pCi/L. This fact suggests that perhaps the use of perforated piping (or additional individual suction pipes through the membrane) might have helped performance in the houses with individual-pipe systems. However, no definitive studies have been conducted to confirm this suggestion or to quantify any benefits that the perforated piping might have provided.

None of the individual-pipe installations in pure crawl-space houses involved complete sealing of the membrane among the EPA study houses cited above. Complete sealing of the membrane might have helped some of those systems achieve levels below 2 pCi/L. Mitigators report achieving levels below 2 pCi/L with fully sealed individual-pipe systems (How92, Sh92).

In contrast to individual-pipe/SMD systems, sub-membrane piping/SMD systems have consistently reduced living-area concentrations below 2 pCi/L, even in houses as large as 1,500 to 2,700 ft^2. This result has led to the conclusion stated earlier, that the use of perforated piping beneath the membrane is most likely to be required when reductions below 2 pCi/L are needed, or when the crawl space is larger than 1,500 to 2,000 ft^2. Careful sealing of the membrane may reduce the number of individual suction pipes required in large crawl spaces, and/or improve the performance of individual-pipe systems relative to sub-membrane piping systems.

Cost of sub-membrane piping. There is a modest installation cost penalty associated with the perforated piping. The piping has a materials cost of about $0.30 to $0.40 per linear foot, which would translate to perhaps $0.45 to $0.60/ft installed. Thus, installation of perforated piping beneath the membrane will add roughly $10 to $30 to the installation cost if the piping is laid as a single length down the center of the

US EPA ARCHIVE DOCUMENT

crawl space, and roughly $40 to $100 if the piping were laid in a loop around the perimeter.

These costs apply if the piping is simply laid on top of the floor beneath the membrane, or is buried in loose gravel. If it is felt to be necessary to dig a trench for the piping in packed soil, so that the piping does not create such a bulge in the membrane and is less subject to damage from foot traffic, the increase in installation cost caused by the sub-membrane piping would be greater.

8.1.2 Number of Suction Pipes

Individual-pipe/SMD approach. As discussed in Section 8.1.1, one individual suction pipe through the membrane at a central location has generally been sufficient to reduce living-area concentrations below 4 pCi/L in crawl spaces having floor areas smaller than 1,500 to 2,000 ft². This has been true even in cases where sub-membrane communication appeared to be marginal to poor, and even in cases where the membrane has not been fully sealed.

While one pipe has consistently seemed to be adequate in moderately sized houses, the data base is fairly limited. The statement above is based on data from only 12 EPA-sponsored individual-pipe installations in houses of 1,500 ft² and less with no gravel on the floor, although the results are generally confirmed by mitigators who use the individual-pipe approach (How92, Sh92). The mitigator might be prepared to install one or more additional suction pipes in individual pipe/SMD installations in crawl spaces with no gravel, even when the crawl space is smaller than 1,500 ft², whenever the floor area approaches that size.

In the EPA study houses, post-mitigation levels achieved in the living area were 2 to 4 pCi/L, and pre-mitigation concentrations in the living area were almost always less than 20 to 30 pCi/L. If the goal were to achieve less than 2 pCi/L, or if the pre-mitigation levels were particularly high, more suction pipes through the membrane could be required.

The individual-pipe/SMD systems in the EPA study houses often did not have the membranes fully sealed. As discussed in Section 8.1.1 (see *Results to date),* careful sealing of the membrane may reduce the number of pipes required for a crawl space of a given size. Sealing may also improve performance, enabling the individual-pipe system to achieve indoor levels below 2 pCi/L.

Where there is native or imported gravel on the crawl-space floor, improving sub-membrane communication, it is far more likely that one individual suction pipe will provide better reductions in large crawl spaces. Individual-pipe/SMD systems with sub-membrane gravel are analogous to SSD systems in basements having good sub-slab communication. Where there has been imported gravel, single suction pipes have consistently reduced living-area levels below 2 pCi/L, although this particular set of conditions has been tested in only two houses having small crawl spaces (about 300 ft²) adjoining basement wings that were also being treated with sump/DTD (Mes90a). Thus, the individual-pipe/SMD approach has not received a fair test in crawl-space houses with gravel floors, and it is impossible to provide definitive guidance regarding how large a crawl space might be treated with a single suction pipe when gravel is present.

The individual-pipe/SMD approach has been tested in two "pure" crawl-space houses having crawl-space floors of 2,000 ft² and larger and having no gravel on the floor to improve communication. In neither of these houses was one suction pipe sufficient to achieve living-area levels below 4 pCi/L (Py90). In one of these houses (DW29, with a floor area of 2,000 ft² and with the membrane unsealed), two suction pipes were required to reduce indoor levels to 3 pCi/L (from a pre-mitigation level of 16 pCi/L). In the second house (DW27, with a floor area of 2,300 ft² and with the membrane fully sealed), two pipes were insufficient to reduce indoor levels below 5 pCi/L (from a pre-mitigation level of 33 pCi/L).

Thus, when the individual-pipe/SMD approach is applied to houses larger than 1,500 to 2,000 ft² with no gravel, at least two suction pipes might be needed. Sometimes more than two pipes might be needed. Careful sealing of the membrane might reduce the number of individual pipes required, or improve the radon reductions. At this time, more definitive guidance regarding the number of pipes in these cases is not possible.

Where it is desired to install an individual-pipe system in a large house with no gravel, the mitigator might begin by installing one or two suction pipes. Any additional pipes might then be added, guided by suction field measurements or smoke visualization tests beneath the membrane, if the initial installation did not provide adequate radon reductions. Alternatively, a submembrane piping/SMD system might be installed at the outset.

In the two study houses having the highest pre-mitigation levels (88 and 160 pCi/L), individual BWD pipes also had to be added to supplement the individual-pipe/SMD system, treating the block foundation walls. This result could be suggesting that in cases where the source term is as high as it likely was in these houses, the weak depressurization created beneath the membrane by individual-pipe/SMD systems may not adequately prevent radon entry into the block cavities.

Sometimes a crawl space will be divided into sections, with a footing and even a load-bearing wall separating the sections. In this case, there would be a separate membrane covering each section, and each section can be viewed as a separate crawl space. Each section would require at least one individual suction pipe, in accordance with the preceding discussion.

Sub-membrane piping/SMD approach. Where a matrix of perforated piping is laid beneath the membrane, only one vertical PVC suction pipe is required. This single suction pipe can penetrate the membrane and connect to the sub-membrane piping at any convenient location.

More than one suction pipe would be required only in cases where the sub-membrane piping consists of two or more isolated segments, in which case a suction pipe would be required for each segment. The sub-membrane piping will not

US EPA ARCHIVE DOCUMENT

commonly be present in isolated segments, except in the case where the crawl space is divided into sections by footings and foundation walls. In that case, each section of the crawl space would require its own membrane and its own sub-membrane piping system.

8.2 Selection of Suction Pipe Location

8.2.1 Individual-Pipe/SMD Approach

Where a single individual suction pipe penetrates the membrane, the penetration is usually at some central location in the crawl space. Where two individual suction pipes penetrate the membrane, one penetration is usually made at a central location in each half of the floor area. Where there are more than two pipes, the penetrations would logically be distributed uniformly around the crawl space, unless sub-membrane suction field extension measurements with the first couple pipes operating would suggest some other distribution.

Individual suction pipes should not penetrate the membrane immediately beside any unsealed seams in the membrane. To be conservative, the pipes should not be located immediately beside sealed seams. Air short-circuiting into a pipe through a nearby seam that is not sealed, or that inadvertently is not fully sealed, could dramatically reduce the extension field extension from that pipe. Such leakage would further reduce sub-membrane depressurizations, which will usually be weak even in the absence of unsealed seams. Accordingly, the individual pipes should penetrate the membrane near the center of one of the membrane sheets, away from seams between adjoining sheets and away from seams against perimeter foundation walls and any interior obstructions (such as support piers).

Where the foundation walls are hollow block, air can leak into the sub-membrane region through the blocks. Accordingly, unless a specific objective is to treat the block walls, individual SMD pipes should generally not be immediately beside the perimeter wall. If a suction pipe is ever placed near a wall, the membrane must be effectively sealed to the wall, regardless of whether the wall is block, poured concrete, or other material (see Section 8.7).

Where the crawl space is divided into isolated sections by a footing and/or foundation wall, the above criteria would be used to locate an individual suction pipe for each section.

8.2.2 Sub-Membrane Piping/SMD Approach

Vertical suction pipe. The PVC suction pipe which penetrates the membrane and connects to the sub-membrane perforated piping can tap into the perforated piping at any point along its length. Thus, the suction pipe can penetrate the membrane at any convenient location over the submembrane piping.

This location could be selected to simplify the routing of the piping and the exhaust stack. For example, the suction pipe could be located near the point where the piping will penetrate the foundation wall to an exterior stack, or at the point where the stack can conveniently extend up through the house for an interior stack.

Where the sub-membrane piping is not in a continuous loop, it would be logical to locate the suction pipe toward the middle of the perforated piping, if this is convenient. Especially where corrugated flexible drain tile is used as the perforated piping, and where flow friction inside the perforated piping can thus be relatively high, application of the suction near the middle of the piping should help achieve a more even suction field distribution beneath the membrane.

If there is a section of the membrane that could not be fully sealed or is otherwise expected to be fairly leaky, the suction pipe should tap into the perforated piping remote from that section, if possible, to reduce the leakage of crawl-space air into the system.

Sub-membrane perforated piping. The perforated piping beneath the membrane can also be considered as suction piping, helping to distribute the suction beneath the membrane. This perforated piping is laid on or trenched into the crawl-space floor in some suitable matrix under the membrane. Different matrices have been used in different installations, with no definitive study to define which configuration might be optimal under different circumstances.

Mitigators who use sub-membrane piping commonly install a single, straight length of piping down the center of the crawl space, parallel to the long dimension of the house (An92, Fit92, Kl92). This simple configuration generally appears to perform well. More complicated patterns are usually considered only when: a) the crawl space is divided into isolated segments, in which case a length of perforated piping is required in each segment; or b) the crawl space has a complicated floor plan, such as an L shape, in which case the length of perforated piping should bend and extend down each leg of the L.

When two adjoining crawl spaces are separated from one another by a footing, one length of sub-membrane piping will sometimes still be used to treat both segments (An92, Kl92). In these cases, the perforated piping beneath the membrane in one crawl space will come up through the membrane, snake over the footing, and then penetrate beneath the membrane in the second crawl space. In these cases, the perforated piping might take the shape of a single long length (if the two crawl spaces are back-to-back), or a U (if the two crawl spaces are side by side). Where this approach is used for treating adjoining crawl spaces, the short section of flexible corrugated piping that snakes over the footing above the membranes, and joins the sections of perforated sub-membrane piping in the two crawl spaces, must *not* be perforated. Also, its penetration through the membranes must be well sealed.

In some research installations, where the crawl space was particularly wide, two or more parallel lengths of piping have been used, each off center, rather than just one down the center. These parallel lengths were then joined by a perpendicular segment near the center. Multiple lengths were used in this manner, so that no point on the floor is more than 6 to 15

US EPA ARCHIVE DOCUMENT

ft from a segment of piping, in an effort to ensure adequate sub-membrane depressurization everywhere. (See Section 2.3.5b, *Operation of central furnace fan,* and Section 2.3.5c, *Number of suction pipes.)* This research study did not define whether the multiple lengths were in fact required, or how wide the crawl space would have to be warrant using more than one length.

If the suction field extended no more than 15 ft in each direction from a central length of perforated piping, this would suggest that any crawl space wider than 30 ft would require more than one length of piping. However, as discussed in Section 2.3.5c, suctions too low to be measured can extend more than 15 ft from the suction point, even when the floor is an impermeable soil (Br92). Thus, especially if the membrane is well sealed, it may be possible to treat crawl spaces wider than 30 ft with one length of piping.

In the most extensive case, one could envision a central length of piping, running from one end of the crawl space to the other, with perpendicular legs extending out at intervals in an effort to ensure that no portion of the floor is more than a few feet from a segment of perforated piping.

In some research installations (Sc88, Fi90, Gi90), the perforated piping has formed a loop around the perimeter of the crawl space, beside the foundation walls. In addition to treating the submembrane region, this configuration should provide the most effective treatment of the foundation walls. Where the walls are hollow block, they might be an important soil gas entry route into the crawl space and the living area. In addition, the soil near the foundation wall may be a particularly important radon source, due to pressure differentials across the wall created by wind effects.

Location of the SMD suction immediately beside the foundation walls is somewhat analogous to the recommendation that SSD suction pipes be located near to the walls in basement houses where sub-slab communication is marginal. It is also analogous to the guidance that depressurization of complete interior drain tile loops should often effectively treat basements having marginal sub-slab communication.

When the perforated piping is laid immediately beside the foundation wall, it will be important that the membrane be attached to the wall with an effective and permanent seal. Otherwise, significant air leakage through the membrane/wall seam could overwhelm the SMD system, preventing suction from distributing beneath the membrane or into the block wall.

One possible concern with locating the piping around the perimeter is that, in wide crawl spaces, the central portion of the membrane might be left inadequately depressurized. Effective submembrane suction has been found in limited testing to extend perhaps no more than 6 to 15 ft from the suction pipe (see Section 2.3.5b, *Operation of central furnace fan);* central points may sometimes be more than 15 ft from the perimeter. However, as discussed in Section 2.3.5c (see *Number of suction* pipes), suctions below the measurement limit can sometimes extend more than 15 ft. Also, as with SSD and DTD systems in basements, radon entry through the central portion of the slab/membrane may be of less concern, so long as the membrane is providing a reasonable barrier at the central locations.

In summary, in many cases where sub-membrane piping is being used, a single straight length of piping down the middle of the crawl space will be sufficient. However, in some cases, more extensive matrices may be needed or preferred. Since there are not definitive data comparing alternative configurations under different conditions, the particular configuration for a given installation will have to be selected by the individual mitigator, based upon experience and upon the considerations discussed above. One other consideration in selecting the specific submembrane piping matrix is the desire to avoid obstructions, an to be out of the way of foot traffic in the crawl space, if possible.

8.3 Selection of Suction Pipe Type and Diameter

8.3.1 Individual-Pipe/SMD Approach

As with the other ASD variations, the appropriate type of suction piping will be rigid Schedule 40 or lightweight PVC, PE, or ABS piping with compatible fittings.

The total flows in individual-pipe/SMD systems should depend upon whether the membrane is completely sealed, whether there is gravel on the floor, and the number of suction pipes.

Limited results reported for individual-pipe systems where the membrane was sealed, there was no gravel, and there was only one suction pipe—i.e., for the expected lowest-flow case—suggest flows in the range of 20 to 40 cfm with the 90-watt in-line tubular fans (Os89a, Mes90a, How92). In some cases, these flows represent the flows from the SMD leg of a combined SSD+SMD system in houses where a basement adjoins the crawl space. At these flow rates, the system piping would have to be no larger than 4 in. diameter to avoid undue suction losses in the piping. Segments of 3-in. piping might not create unacceptable suction losses at these flows, if needed to facilitate an aesthetic installation. Refer to Figure 13 and Section 4.6.1.

Where the membrane is not completely sealed, flows from individual-pipe systems might be expected to be higher. Data from two houses with the membrane not fully sealed, with no gravel, and with only one suction pipe gave flows of 40 to 90 cfm (Py90). Such flows would increase the need to using 4-in. piping, avoiding sections of 3-in. piping. Since this case also reflects the situation that could develop with the fully sealed membrane discussed in the preceding paragraph, if seals failed or punctures occurred in the membrane over time.

Thus, the mitigator may be well served to consistently use 4-in. piping in individual-pipe/SMD systems whenever possible, to account for possible higher flows in any particular installation. This could be desirable even when the membrane is sealed, there is no gravel, and there is only one suction pipe. Because the crawl-space piping will be out of sight, the use of the larger piping should generally not create any particular

US EPA ARCHIVE DOCUMENT

difficulties, at least not for that portion of the piping which is inside the crawl space.

Where there is gravel on the crawl-space floor, the flows from individual-pipe/SMD systems would be expected to be somewhat higher, since the gravel would facilitate the flow of air from a larger area. In two relatively small crawl spaces (300 ft^2) with gravel floors, with the membrane completely sealed and with only one suction pipe, flows were 30 to 100 cfm with the 90-watt fans (Mes90a). The higher flows could have resulted from the possibility that the membrane seams in fact might not have been sealed as well as was thought. Although the two houses cited here had poured concrete foundation walls, higher flows might also be expected when gravel is present in houses having block foundations, since the gravel could facilitate air being drawn into the system through the block walls.

Thus, where there is gravel on the floor, 4-in. diameter piping should generally always be used to reduce the suction loss. Again, flows could be increased if the membrane were not completely sealed (or if seals broke), if more suction pipes were used, or if the crawl space were larger, further underscoring the justification for using piping of at least 4 in.

Use of multiple suction pipes can also increase system flows. The highest flows reported for an individual-pipe/SMD system—over 100 cfm—were reported for one house having two suction pipes, without the membrane being fully sealed, but with no gravel (Py90). In this case, the second pipe added about 20 cfm to the total system flow, compared to the case where this same system was operated with only one pipe. At flows this high, use of 4-in. piping throughout would be important.

8.3.2 Sub-Membrane Piping/SMD Approach

Vertical suction pipe. The vertical suction pipe which taps into the sub-membrane perforated piping and leads to the fan should be rigid lightweight or Schedule 40 PVC, PE, or ABS, as in the individual-pipe approach.

In houses having a single length of perforated piping down the center of the crawl space, with the membrane completely sealed and with no gravel on the floor, typical system flows appear to be 40 to 80 cfm with the 90-watt tubular fan (Bo91, Fit92, Kl92). As would be expected, these flows are higher than those from individual-pipe/SMD systems when there is no gravel on the floor. At these flows, the piping should generally be no smaller than 4 in. diameter, based on the friction losses in Figure 13 and the discussion in Section 4.6.1.

Failure to seal the membrane would be expected to increase flows. In one house where two parallel lengths of perforated piping were installed, where the membrane was *not* sealed, and where there was no gravel on the floor, flows were 130 cfm (Fi90). At flows this high, the piping should be no smaller than 4 in. diameter. As discussed in Section 5.3, in connection with sump/DTD systems, larger (6-in. diameter) piping is probably not warranted at these flows from the standpoint of reducing friction loss. However, flow noise in the pipe could start to become of concern with 4-in. piping at these flows.

Placing the perforated piping in a loop around the perimeter might also be expected to increase flows, compared to a central straight length. In one house where the piping was around the perimeter, with the membrane completely sealed and with no gravel on the floor, flows were 113 cfm (Sc88). Again, 4-in. piping would be appropriate.

Gravel on the crawl-space floor would be expected to increase flows. Flows have been reported for three houses having gravel on the floor (Fi90). All three represent high-flow conditions, in that, in addition to the presence of gravel, the sub-membrane piping was laid in a more extensive matrix, usually as a loop around the perimeter. In addition, the foundation walls were hollow block, increasing the possibility of air flow from this source. The membranes were always sealed around the perimeter, but were not always sealed at interior seams. Under these conditions, total flows were 187 to over 200 cfm with a 90-watt fan at full capacity. These flows are the maximum that can be expected with the 90-watt fans, given flow restrictions created by the piping. The highest flows among these three were observed in the one house having a complete liner that was completely sealed, with the piping at an interior location (not a perimeter loop); this set of conditions would be expected to provide the least leakage of crawl-space air into the system.

With the roughly 200 cfm flows observed in the systems on gravel floors, the friction loss figures from Figure 13 would suggest that 6-in. piping could sometimes be desirable, to reduce both friction loss and flow noise. At that high flow in 4-in. pipe, a large fraction of the fan suction capacity could be consumed by virtue of the suction loss in the pipe (about 2 to 3 in. WG total friction loss per 100 ft of pipe), thus providing reduced suction beneath the membrane. However, in practice, use of 4-in. piping when there is gravel on the floor may simply make the fan operate at a different point on its performance curve, reducing flows and sub-membrane depressurizations. When there is gravel on the floor, reduced depressurizations may not represent a serious problem, especially if the membrane is well sealed.

In practice, the three sub-membrane piping/SMD systems with gravel floors utilized 4-in. PVC suction piping (Fi90). All of them performed very well, reducing living-area concentrations below 2 pCi/L, usually from pre-mitigation levels of 15 pCi/L and higher, when the 90-watt fans were operated at full capacity. The good results with the 4-in. suction piping in the gravel-floored crawl spaces could be due to the fact that the piping run was short, perhaps only 10 to 20 ft long, so that the total loss in the PVC piping may have been only about 0.25 to 0.5 in. WG—a loss readily handled by the 90-watt fans. Another contributing explanation could be that with such good sub-membrane communication and with the perforated piping to further aid in distributing the suction, little suction is required for such a SMD installation to perform well. Careful sealing of the membrane would be particularly important in gravel-floor cases.

US EPA ARCHIVE DOCUMENT

Sub-membrane perforated piping. Often, the sub-membrane perforated piping is the same 3- to 4-in. diameter flexible black corrugated piping commonly used for drain tiles in the particular geographical area. This flexible piping is simple to get into the crawl space, and is simple to lay. It is particularly convenient when the matrix will involve bends, such as when the pipe is laid in a loop around the perimeter.

Another type of piping that has been used has been rigid 4-in. diameter perforated PVC, PE, or ABS piping. To resist crushing, Schedule 40 piping might be preferred in this application. This rigid piping is most convenient when the matrix consists of a straight length laid down the center of the crawl space, but, with the use of elbows and other fittings, the rigid pipe can be formed into any matrix configuration desired.

Both the flexible corrugated piping and rigid piping should be fairly resistant to being permanently crushed by the weight of a person on hands and knees, even if the piping is not trenched into the crawl-space floor. The lightweight rigid piping would be the most subject to damage, and might warrant being trenched into the floor if it is near a foot traffic route. Any of the piping could be subject to damage from heavy activities in the crawl space, e.g., from service personnel installing a new furnace.

Piping larger than 4 in. diameter has never been used for sub-membrane perforated piping in SMD systems. This is true despite the fact that the rough sides of the flexible corrugated piping result in a friction loss about 1.8 times that in smooth-walled pipe. When a straight length of piping is used, when the membrane is fully sealed, and when there is no gravel on the floor, good performance has been achieved without larger piping. In these cases, flows are generally low enough (40 to 80 cfm), the length of piping short enough, and the system sufficiently forgiving, such that larger piping is not needed.

In the more extreme case, where the piping forms a loop around the perimeter of a gravel-floored crawl space, flows in the perforated piping can be on the order of 200 cfm at some locations, and the piping can involve over 100 linear feet. In these cases, a significant suction loss could result through this amount of 4-in. piping. However, the gravel which is contributing to these high flows is also providing excellent sub-membrane communication which makes high suctions unnecessary, so long as the membrane is adequately sealed. The results show that, under these circumstances, very good radon reductions can be achieved despite the presumably high suction loss in the 4-in. piping. Moreover, the flows will not be as high as 200 cfm at all locations in the piping.

8.4 Selection of the Suction Fan

Individual-pipe/SMD systems. With either the individual-pipe or the sub-membrane piping SMD approaches, the air flows involved and the suctions desired will generally dictate that the fan be at least equivalent to the 90-watt in-line tubular fans listed in Table 1 and discussed in Section 4.4.1. These fans can move up to 270 cfm at zero static pressure, although they are practically limited to about 180 to 200 cfm when connected into 4-in. piping. Most of the SMD installations discussed previously have utilized such fans.

With the individual-pipe approach, the flows generated by the 90-watt fans were 20 to 40 cfm when there was no gravel on the floor (with suctions of over 1.5 in. WG in the piping), and 30 to 100 cfm when there was gravel (with suctions of 1.0 to 1.5 in. WG).

Especially for the no-gravel case, the smaller 50-watt in-line tubular fans could handle the flows involved. In fact, they would generate lower flows. In theory, these lower flows should be more than sufficient, considering the flows that should nominally be developed under the membrane based upon fundamental principles. And, in fact, a few mitigators report occasionally having reasonable success with these smaller fans in individual-pipe/SMD systems when the membrane is well sealed and when communication beneath the membrane is fairly good (Sh92).

However, in practice, the smaller fans are often not a good choice. The smaller fans would develop considerably lower suctions than would the 90-watt fans (probably 0.25 to 0.75 in. WG, rather than 1.0 to 1.5+ in. WG). This reduced suction might not be sufficient to distribute suction beneath the membrane when sub-membrane communication is poor. Also, in practice, the smaller fans could have trouble handling the higher flows that could develop over time, as ruptures occur or seals break.

Thus, in view of the limited experience with SMD systems, and in view of the potential problems that could arise over the long term from use of the smaller fans, it is recommended that the 90-watt in-line fans (or equivalent) be routinely used for individual-pipe SMD systems until data become available demonstrating when smaller fans might be sufficient.

Where the membrane is fully sealed, and especially where there is no gravel, the in-line radial blowers discussed in Section 4.4.2 could sometimes be a reasonable choice for individual-pipe systems. At the flows involved-- 20 to 40 cfm with no gravel, sometimes well below 100 cfm even with gravel-- the radial blowers would develop distinctly higher suctions than would the tubular fans (up to 2 to 3.5 in. WG, compared to 1.5 in. WG). These higher suctions could aid in distributing the suction field under the membrane.

The high-suction/low-flow fans discussed in Section 4.4.3 are generally not a reasonable choice for SMD systems. The very high suctions are not required, and the flows that can be developed (especially if membrane leaks develop over time) will be too high for some of the high-suction fan models.

Sub-membrane piping/SMD systems. With the sub-membrane piping/SMD approach, flows are sufficiently high, even when no gravel is present, it is even more apparent that the 90-watt tubular fans will generally be the best choice. Flows may be too high for the 50-watt tubular fans. And, since flows are consistently above 100 cfm with the 90-watt fans, there would not seem to be an incentive to use a radial blower since, at these flows, the suctions developed by the blowers are comparable to those developed by the tubular fans.

US EPA ARCHIVE DOCUMENT

The flows of 100 to 200 cfm observed in these SMD systems with 90-watt fans are too high for 50-watt tubular fans. In practice, of course, use of a 50-watt fan in such cases would result in lower flows and lower membrane suctions. When gravel is present on the floor and submembrane communication is thus very good, these lower flows and suctions may in fact be sufficient. Some mitigators have occasionally used the smaller fans with sub-membrane piping/SMD systems in small crawl spaces with fully sealed membranes, even when there is no gravel (An92).

However, experience is not sufficient to confirm that the 50-watt fans will in fact often be adequate. Moreover, as ruptures in the membrane and the membrane seals occur over time, the flows may increase to the point that the small fans will become overwhelmed and no longer effective. Accordingly, it is recommended that the 90-watt tubular fans always be used in submembrane piping/SMD systems, until an experience based is developed demonstrating when the smaller fans are acceptable.

With the 200+ cfm flows observed in the sub-membrane piping systems with gravel floors, one might even consider using one of the larger, 100-watt fans in such installations.

However, the sub-membrane piping systems in the several test houses having gravel floors were extremely effective with the 90-watt fans despite the high flows, reducing living-area concentrations below 1 to 2 pCi/L. Thus, even at the high flows, the 90-watt fans appear to be consistently distributing adequate suction through the perforated piping to effectively treat the house. Accordingly, the use of 100-watt fans in such cases would not appear to be warranted unless indoor levels below 1 pCi/L were required.

8.5 Installation of the Membrane and the Suction Pipes

8.5.1 Installation of the Membrane

Selection of membrane material. In almost all reported SMD installations, the membrane has consisted of polyethylene sheeting. Such sheeting is relatively easy to obtain in rolls of appropriate dimensions (10 to 20 ft wide by perhaps 120 ft long), and is relatively convenient to work with.

Regular polyethylene sheeting as thin as 6 mil has sometimes been used, although regular 8- to 10-mil sheeting would provide better puncture resistance. Rather than regular polyethylene, an increasing number of mitigators are using high-density cross-laminated polyethylene. The cross-laminated material has dramatically superior tensile strength and puncture resistance. Unlike the regular polyethylene sheeting, which can be torn by hand even with a thickness of 10 mil, the high-density cross-laminated material cannot be torn by hand, even though its thickness may be only perhaps 4 mil. Due to its significantly increased puncture resistance, the cross-laminated polyethylene is recommended despite its higher cost.

The polyethylene sheeting that is used must be stabilized to resist UV radiation.

To provide additional protection against damage to the membrane, the polyethylene should be overlain by heavier material along expected traffic routes. Various materials have been used for this purpose, including roofing felt, EPDM rubberized roofing membrane, and drainage mat.

Special precautions may be necessary in particular cases. Such cases could include walk-in crawl spaces, where there may be foot traffic over the entire crawl space floor, or crawl spaces with very irregular floors (e.g., with sharp protruding rocks). In such cases, special precautions could include the use of even thicker cross-laminated material, or installation of heavier material underneath the polyethylene, between the sheeting and the crawl-space floor.

In some cases, the crawl space will already have a plastic vapor barrier such as Visqueen laid over some portion of the floor, for moisture purposes. Where this plastic is in good condition, mitigators sometimes straighten this existing plastic and incorporate it into the SMD membrane. However, it is recommended that the existing moisture control membrane be replaced with UV-resistant cross-laminated polyethylene sheeting for the SMD system.

Identification of area to be covered by the membrane. Where there is sufficient headroom throughout the crawl space, the entire floor should always be covered by the membrane. Complete coverage should provide the best opportunity for depressurizing the soil everywhere, intercepting the soil gas before it can enter the crawl space. Complete coverage should also reduce the leakage of crawl-space air into the system. This is particularly true when there is gravel on the floor, since the gravel will facilitate air flow through the exposed gravel into the SMD system. If air leakage were sufficiently high due to incomplete coverage, this could not only reduce system performance, but also increase the heating/cooling penalty (if treated air is drawn down from the living area overhead), and perhaps also contribute to back-drafting of combustion appliances in the crawl space.

Sometimes, a portion of a crawl space might be very difficult to access. For example, the crawl-space floor might be sloped such that one portion has less than 1 ft of headroom. Or, a major obstruction such as a furnace and associated forced-air ducting could prevent coverage of the floor directly under the furnace.

As discussed in Section 2.3.5c (see *Extent of membrane*), very limited results to date suggest that a SMD system can sometimes still be effective even when some limited portion of the floor is left uncovered. On the other hand, one mitigator (Kl92) reports that failure to provide complete coverage can sometimes reduce SMD performance so significantly that it is necessary either: a) to excavate the inaccessible part of the crawl space (to provide the headroom needed to enable complete coverage); or b) to supplement the SMD system with some other technique (such as a heat recovery ventilator in the house).

In summary, sufficient experience has not yet been obtained to definitively demonstrate under what conditions different amounts of floor can be left uncovered, and what the perfor-

US EPA ARCHIVE DOCUMENT

mance, operating cost, or other penalties might be for such incomplete coverage. With the current data, the guidance is that the mitigator should make a best effort to cover the entire crawl-space floor. However, inability to cover the entire floor should not lead the mitigator to conclude that SMD is not an option for that house, especially in cases where the segment of inaccessible floor is relatively limited and when there is not gravel on the floor.

Laying the membrane. Installation of a membrane will require that workers spend some time in the crawl space. Crawl spaces can contain molds and spores which can be irritating and unhealthful. Workers should be provided with appropriate respiratory protection.

The crawl-space floor must be cleared of any movable objects that are being stored in the crawl space. If possible, any irregularities in the crawl space floor (such as embedded rocks) should be cleared from the expected traffic paths (e.g., the path between the crawl-space entrance door and the furnace or water heater), so that the membrane will be less likely to be ruptured by subsequent traffic. If there is an existing vapor barrier which is to be replaced by the SMD membrane, the old plastic sheeting might be removed. Some mitigators leave the old vapor barrier in place, and simply install the new membrane on top of it (An92).

The 10- to 20-ft wide sheeting should be rolled out over the floor in a flat, smooth manner, with care by the installers to avoid ruptures in the membrane during installation. In some cases, rather than bringing the entire roll of polyethylene into the crawl space, it may be more convenient to pre-cut the sheeting to the desired lengths outside, and bringing the pre-cut sheets into the crawl space.

Adjoining sheets should be overlapped by at least 12 in. at seams between the sheets. Where the sheets meet the perimeter foundation walls, they should be cut leaving about 12 in. excess sheeting, so that the sheeting can be extended a short distance up the walls. This will be necessary so that the sheet can be attached to the walls as recommended. Even if perimeter sealing is not initially planned, it is advisable to leave the excess sheeting anyway, to permit subsequent perimeter sealing if it is later found to be desired.

Where the sheeting comes up against an interior obstruction such as a pier, it should be trimmed to fit around the obstruction, again leaving perhaps 12 in. excess to enable subsequent attachment to the sides of the obstruction. The sheets should be laid and trimmed to fit relatively snugly around the obstruction. The optimum width of sheeting to use (10 vs. 20 ft) will depend upon the dimensions, accessibility, and obstructions in a given crawl space.

Where there is a furnace or water heater in the crawl space, the membrane should not contact the hot part of the unit. If the unit rests upon a concrete pad, the membrane might be sealed against the pad. If a furnace rests, e.g., on hollow blocks, the furnace can be temporarily jacked up so that the blocks can be moved and the membrane can be extended uninterrupted under the furnace; the blocks would then be replaced.

At particularly rough or sharp points on the floor, drainage mat, roofing material, or some other heavy material might be placed beneath the membrane, to try to protect it from puncture. Similar heavy materials should be placed on top of the membrane as walkways along expected traffic routes, for the same reason.

Sealing the membrane—general. The available data demonstrate that radon levels in the living area can often be reduced below 4 pCi/L even when the membrane is not completely sealed at the seams between the sheets, at the perimeter wall, and around interior obstructions. However, complete sealing is recommended whenever possible, for a variety of reasons:

- Increased indoor radon reductions expected with a given SMD system, compared to those likely with the same system if the membrane were not sealed;
- Fewer suction pipes required for individual-pipe/SMD systems;
- Reduced heating/cooling penalty in the house, due to less treated house air drawn down into the crawl space from the living area;
- Reduced contribution to possible backdrafting of combustion appliances in the crawl space or in an adjoining basement; and
- Increased likelihood that the membrane sheets will remain in place, and will not get shifted due to foot traffic over the years, opening gaps in the cover.

A disadvantage of sealing is that it will add to the installation time and cost. Intuitively, sealing will be most critical for seams which are near individual suction pipes, or seams which run parallel to and immediately beside lengths of sub-membrane perforated piping.

There are currently no definitive data demonstrating the impacts on performance if the membrane is not sealed under various circumstances. However, the limited available data confirm that better performance is achieved when the membrane is sealed (see Section 2.3.5c, *Degree of membrane sealing,* and the discussion of individual-pipe/SMD systems in Section 8.1). Moreover, the other potential benefits of sealing, listed above, appear compelling. As a result, it is recommended that the membrane be completely sealed whenever possible.

Most mitigators who have substantial experience installing SMD systems indicate that they routinely seal the membrane completely (An92, Bro92, Fit92, How92, Kl92, Sh92).

Where cross-laminated polyethylene has been used as the membrane, gun-grade polyurethane caulk is an extremely effective sealant. Where regular polyethylene sheeting has been used, polyurethane caulk does *not* provide a good bond, and some other sealant must be used.

US EPA ARCHIVE DOCUMENT

US EPA ARCHIVE DOCUMENT

Sealing the membrane—seams between sheets. Seams between adjoining sheets of membrane are usually sealed by applying one or two continuous beads of sealant between the sheets, in the 12-in. strip where the sheets overlap. As indicated above, polyurethane caulk is a good sealant choice for the recommended cross-laminated polyethylenes; various other sealants have been used for regular polyethylenes.

It can be difficult to achieve an air-tight seal. To help ensure that the sealed seam is air-tight, some mitigators apply one very liberal bead, using one tube of gun-grade polyurethane caulk per 15 linear feet (Kl92). Other mitigators apply two parallel beads of sealant.

After the sealant is applied, the two sheets of polyethylene are pressed together. Some mitigators then tape the seams using duct tape, to hold the sheets together while the sealant cures (Kl92). If the tape is not used, the sheets of plastic can shift as the workers complete the installation, causing the seal to break before the sealant cures.

Even if the mitigator decides not to seal all of the seams between sheets throughout the crawl space, it is strongly recommended that the seams be sealed for the sheet(s) through which an individual SMD suction pipe penetrates, as well as any seams which parallel a sub-membrane perforated pipe. High leakage rates through unsealed seams near the suction point could seriously reduce the extension of the suction field to remote locations.

Sealing the membrane—perimeter foundation walls. To seal the membrane against the perimeter foundation wall and any interior piers, one common approach is to simply adhere the membrane to the wall with a bead of sealant. This is the approach illustrated in Figures 6 and 7, and is the simplest method for sealing the membrane against the wall. There would be no other structural support for the membrane against the wall, other than this bead of sealant. Based upon field experience, a bead of polyurethane caulk can bond cross-laminated membranes to the foundation wall very securely and durably, if the wall surface is reasonably flat and is properly prepared. Some mitigators report such seals remaining intact in SMD systems for at least five years (Kl92).

By this approach, the perimeter wall should first be wire brushed at the height at which the caulk bead is to be applied (i.e., 6 to 12-in. above the crawl-space floor), to remove any dirt or other loose deposits.

The roughly 12 in. of excess sheeting that was left beside the foundation wall would then be folded at a 90° angle, at the joint between the foundation and the crawl-space floor, and would be extended straight up the wall. That is, the membrane would remain flat on the crawl-space floor right up to the wall, at which point it would then proceed straight upward, basically flat against the wall. See Figures 6 and 7. Some slack should be left in the vertical section of plastic rising up the wall; this will help prevent stresses from being applied to that seam by foot traffic in the crawl space, or by the SMD system itself when the system fan is first turned on and the membrane is drawn down against the soil (Kl92).

The membrane should remain flat against the floor right up to the wall, rather than beginning to rise above the floor at some distance from the wall. If some portion of the membrane is being held suspended above the floor by the bead of caulk, then any weight applied to the suspended membrane by persons or animals in the crawl space might cause the membrane to rip away from the wall at that location, or might cause the membrane itself to tear, destroying the seal.

A liberal bead of polyurethane caulk (or other sealant) would be applied on the wall near the upper end of the membrane, and the membrane would be pressed tightly and smoothly against this bead. Some mitigators report using as much as one tube of gun-grade polyurethane caulk per 10 linear feet, then taping the membrane against the wall using duct tape, to hold the plastic against the wall while the sealant cures (Kl92).

Where there are obstructions in the wall which extend to within 6 to 12 in. of the floor (e.g., a crawl-space access door or a foundation vent), the membrane will need to be trimmed to pass beneath the obstruction. The caulk bead would likewise extend underneath the obstruction. Where the membrane turns a corner around the perimeter wall or around a pier, the membrane would need to be cut and tucked appropriately to permit a reasonably neat, sealed corner.

Current experience suggests that a bead of sealant will attach the membrane to a flat (block or poured concrete) perimeter wall with a sufficiently secure and durable bond, without any further steps to anchor the membrane against the wall. However, under some circumstances, mitigators find it desirable to attach the membrane to a wall using a 1- by 2-in. or 1- by 4-in. wooden furring strip nailed into the wall.

One circumstance where a furring strip can be necessary is when the foundation wall is irregular, e.g., when the wall is fieldstone. In this case, one approach would be to firmly attach a furring strip to the wall using masonry nails. The end of the membrane would be caulked onto this strip, and a second furring strip nailed into the first, sandwiching the membrane between the two. The gaps between the first furring strip and the irregular wall would then be sealed using expanding foam or caulk, as applicable (Kl92).

Another case where a furring strip can be used is when the membrane is extending all the way up the face of the wall, and is being attached to the band joist above the wall. This will sometimes be done when it is desired to try to increase the treatment of a block wall, as discussed later. It might also be an option when the wall is irregular (e.g., fieldstone), as an alternative to attaching the furring strip directly to the fieldstone. One approach that has been used in this case would be to caulk or cement the end of the membrane onto the band joist around the entire perimeter. The furring strip would then be placed on top of the caulked membrane and nailed into the band joist, sandwiching the membrane between the furring strip and the band joist.

Most mitigators who use furring strips simply sandwich the end of the membrane between two pieces of wood, as with the approaches described above. A more rigorous approach would

be to wrap the end of the membrane around a furring strip, then nailing this strip to the wall or to another piece of wood with a layer of caulk in between. However, this more elaborate and time-consuming approach is probably not necessary when the membrane has been installed in a manner which will reduce the risk of the membrane being ripped out of the sandwich: that is, when the membrane rises flush against the wall with some slack, as discussed above, and especially when the membrane is cross-laminated material.

In some early SMD installations, furring strips were used to attach the ends of the membrane directly to block or poured concrete foundation walls, along with a bead of caulk between the furring strip and the wall. This was done for increased security, rather than relying solely on the bead of caulk or other sealant to anchor the membrane against the wall. The use of furring strips in this manner, when the wall is relatively flat, does not appear to be widely practiced at the present time, due to the success that has been demonstrated using caulk alone (as discussed above) and due to the cost and time penalties involved in using a furring strip. The extreme case (where the membrane is wrapped around a furring strip) could add about $350 to the installation cost, relative to the simplest case (where the membrane is attached with a caulk bead), varying with the size of the crawl space (He91b, He91c).

Sealing the membrane—configurations to treat block foundation walls. In some cases where the foundation walls are hollow block, it is believed that the block wall may be an important radon entry route into the crawl space and, from there, into the house. In these cases, one option would be to install an individual BWD suction pipe into the block walls, analogous to the approach shown in Figure 34 for basement SSD systems. However, some mitigators instead modify the installation of the membrane in an effort to increase the treatment of the block wall by the SMD system.

Several options for increasing block wall treatment by the SMD system are illustrated in Figure 38.

Some mitigators try to increase the effective BWD component by drilling a few holes through the face of the blocks below the point where the membrane is sealed against the wall, as shown in Figure 38A (Kl92). This should increase the flow of air from the block cavities into the SMD system, thus increasing suction in the walls, although the suction field will be fairly weak beneath the membrane at that point unless the suction is being distributed by a perimeter loop of sub-membrane perforated piping. Another approach, which may more positively treat the entire face of the wall and the top voids, would be to extend the membrane all the way up the face of the wall, as shown in Figure 38B (Sh92). In this figure, the membrane is attached to the band joist by being sandwiched between the joist and a furring strip, in the manner discussed previously. One difficulty in this approach is that there will always be some obstructions at some point along the wall—e.g., the access door and foundation vents—which the membrane will have to be contoured around.

Figure 38C illustrates an option used by one mitigator (An92) for distributing the suction around the perimeter, in an effort to increase the treatment of the walls. This option, analogous to the baseboard duct BWD approach, would be an alternative to installing a perimeter loop of sub-membrane piping as a means for achieving strong suction at the perimeter. This option is discussed further later.

Sealing the membrane—interior obstructions. Where there are interior support piers, the membrane can be sealed around the piers in a manner similar to that discussed previously for sealing against the perimeter foundation wall.

Where there is a concrete pad in the crawl space supporting, e.g., a furnace or a water heater, the membrane should be sealed to the edges of the pad with a bead of caulk or other sealant.

Role of the SMD membrane as a radon barrier. It is underscored that the polyethylene being installed as described above is intended as an element of a SMD system. That is, it is serving as a plastic "slab" which will enable potentially effective depressurization of the crawl-space soil while reducing (but not eliminating) the amount of crawl-space air being exhausted by the SMD system.

Without operation of the SMD fan, this membrane should reduce (but not prevent) convective (pressure-driven) flow of soil gas up into the crawl space. Without the SMD fan to create depressurization beneath the membrane, the membrane cannot be relied upon by itself to effectively block convective flow up from the soil. Despite efforts to carefully seal the membrane, there will undoubtedly be many leakage points.

In addition, polyethylene—although a very effective convective barrier, if it were air-tight—is only a moderate barrier to radon diffusion. As a result, radon trapped beneath the membrane could continue to diffuse into the crawl space.

Thus, installation of the membrane itself, as a stand-alone "sealing" step without the SMD component, would likely be of limited effectiveness, even if it is carefully sealed at all seams. Limited experience to date using crawl-space floor barriers as a stand-alone mitigation approach has shown indoor radon reductions of only 0 to 30% (He92).

8.5.2 Installation of the Suction Pipes

Individual-pipe/SMD approach. A hole is cut in the membrane at the point where the suction pipe is to penetrate, of the same diameter as the suction pipe. The suction pipe is inserted vertically down through this hole, and the membrane is sealed around the pipe in an air-tight manner.

The vertical suction pipe must be supported in some manner, so that the open end of the pipe beneath the membrane is held at least a couple inches above the crawl-space floor. If the pipe were to drop so that the open end were resting directly on the soil, air flow into the pipe would be severely restricted, reducing the suction field distribution that could be maintained beneath the membrane. Analogous to the case with SSD systems (see Section 4.5.1, *Mounting suction pipes through slab),* the pipe can be supported by strapping or hangers overhead, or it can be supported at the crawl-space floor under the membrane.

US EPA ARCHIVE DOCUMENT

US EPA ARCHIVE DOCUMENT

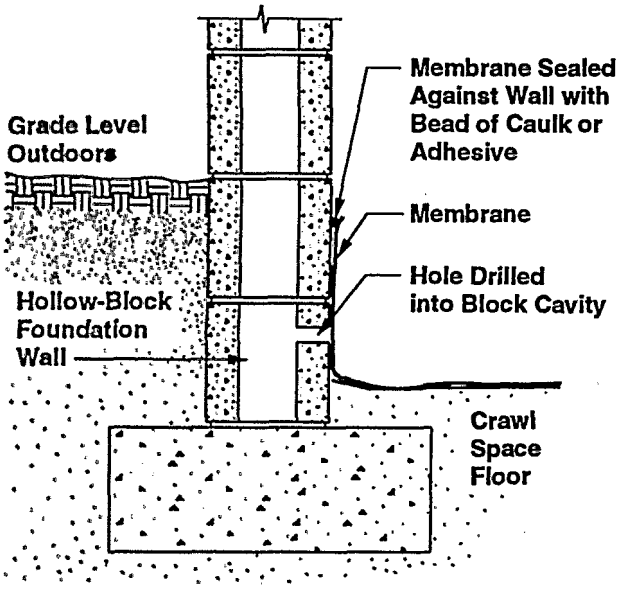

A) Holes drilled through inside face of block at intervals, below the point at which the membrane is sealed against the wall.

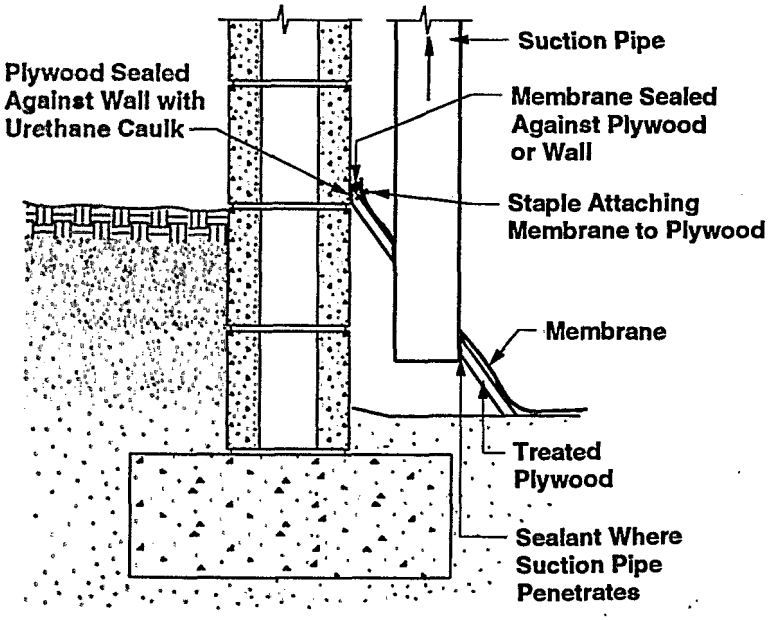

C) Channel created around crawl-space perimeter using plywood; suction drawn on channel.

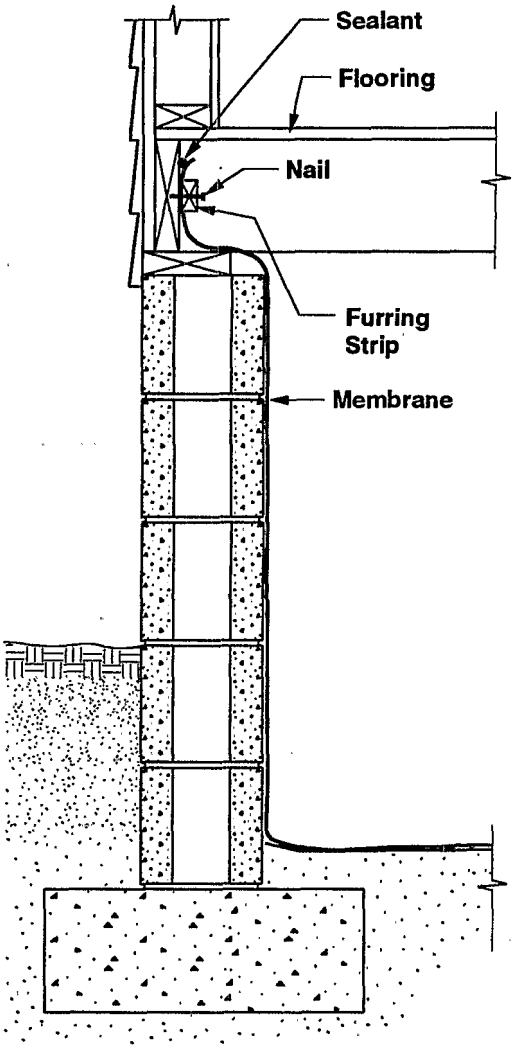

B) Membrane extended upward to cover entire wall, sealed to band joist.

Figure 38. Some alternative approaches for increasing block wall treatment by a SMD system.

Several of the alternatives for installing the individual suction pipe through the membrane are illustrated in Figure 39.

One common method for installing the individual suction pipe to place an inverted T-fitting on the bottom end of the pipe beneath the membrane, as illustrated in Figure 6 and in Figures 39A and 39B. The top of the T rests on the soil floor, supporting the pipe, and the two open ends are aimed parallel to the floor. These three figures vary primarily according to the steps taken to ensure that the membrane is not sucked into the open ends of the T, blocking flow.

In Figure 6, a rigid, flat plastic or plywood plate is placed on top of the T, supporting the membrane above the T for a distance sufficient to prevent the membrane from becoming drawn back into the open ends. Figure 39A is essentially identical to Figure 6, except in this case, the plastic "plate" is in fact the base of plastic roof flashing units (Kl92), identical to those used to flash around stack penetrations through roofs (e.g., see Figure 23). The roof flashing is used in this application because it is simple and convenient. In Figure 39B, no plate is used to specifically protect the ends of the T, but holes are drilled through the fitting so that suction can also extend through the sides (Br92).

Another option that has been reported has been to install the open end of the suction pipe in a frame of some type which will keep the membrane away from the open end. In Figure 39C, this "frame" is an inverted bucket with holes drilled through its sides (Sh92). Analogous frames have been fabricated out of plywood (Mes90a). Since there is no T fitting to support the weight of the piping in Figure 39C, the pipe would have to be supported by strapping or hangers overhead, or by a pipe clamp fitted tightly around the pipe and resting on the top of the bucket (analogous to the pipe clamp shown at the overhead flooring in Figure 17C).

The pipe installation approaches illustrated in Figures 6, 39A, 39B, and 39C effectively create a "pit", analogous to the sub-slab pits for SSD systems, by lifting the membrane above the crawl-space floor around the pipe penetration. This "pit" should accomplish one objective of a SSD pit, namely, reducing suction losses as the soil gas accelerates (see Section 4.5.1, *Excavating a pit beneath the slab).* But it will not achieve the second objective of intercepting fissures or strata beneath the soil surface. Figure 39D illustrates an approach where a true pit is excavated in the crawl-space floor, and covered with treated plywood to maintain the cavity. This approach has been considered by researchers (Py90) and utilized by some mitigators (How92). In the specific configuration shown in Figure 39D, the weight of the piping is not supported where it penetrates the plywood; hence, it must be supported by hangers or strapping from the joists overhead.

As one variation of the specific configuration in Figure 39D, a second piece of plywood is sometimes placed on top of the membrane and screwed into the plywood underneath, sandwiching the membrane between the two pieces of plywood (How92). In that case, the pipe penetration through the membrane would be sealed using a bead of polyurethane caulk around the perimeter of the top piece of plywood, between the plywood and the membrane, and by caulk around the seam where the pipe penetrates the top piece of plywood. As a second variation, the weight of the vertical pipe is sometimes supported at the plywood, e.g., using a PVC flange mounted in the hole through the plywood, analogous to the SSD pipe configuration shown in Figure 15C (Py90, How92).

No testing has been conducted to assess any performance benefits resulting from such a pit, due to interception of fissures or permeable strata.

When any of these configurations is installed, it is desirable to keep the hole through the membrane as small as possible, preferably no larger than the pipe diameter. This should minimize the potential for leaks developing through the membrane over time near the suction point.

If one of the above configurations using a T fitting is used, the T (and any sub-membrane plate) can be fit onto the bottom of the suction pipe beneath the membrane after the pipe is inserted through the membrane hole. Thus, the membrane hole does not have to be enlarged to accommodate the T and the plate. To do this, at least one of the membrane seams near the penetration would have to be left unsealed until after the T is installed, so that the fitting can be slid under the membrane from the side. The hole through the membrane for the suction pipe could be cut as a series of slits radiating out from the center, leaving all of the pie-shaped pieces in place. This could facilitate sealing the membrane against the pipe after installation.

The perforated bucket in Figure 39C or the plywood frame would logically be inserted under the membrane in a similar manner. The sub-membrane sheet of plywood covering any sub-membrane pit as in Figure 39D would be installed, with a hole to accommodate the suction pipe, before the membrane was laid.

Where a T fitting is being installed, some mitigators make a slit in the membrane sufficiently large to accommodate the T through the membrane from on top (An92). With the open end of the T protruding up through the slit membrane, a square piece of polyethylene sheeting large enough to cover the slit—and with a hole through the middle just large enough to accommodate the suction pipe—is sealed over the top with a continuous bead of caulk or sealant around the perimeter, sufficiently large to completely enclose the slit. Again, it is particularly important that this slit be effectively sealed, since leaks near the suction point could have a serious impact on the distribution of the sub-membrane suction field.

Once the suction pipe has been connected to the sub-membrane T fitting, bucket, frame, or plywood sheet, the membrane must be effectively sealed around the pipe, to prevent air leakage through the membrane at that location.

One possible approach for sealing the membrane against the pipe is to use a hose clamp, as illustrated in Figures 6, 39B, 39C, and 39D. By this approach, a hose clamp is placed around the vertical suction pipe above the membrane. A liberal, continuous bead of polyurethane caulk is placed around the circumference of the suction pipe, probably about 6 in. above the crawl-space floor. The membrane is then pressed

US EPA ARCHIVE DOCUMENT

US EPA ARCHIVE DOCUMENT

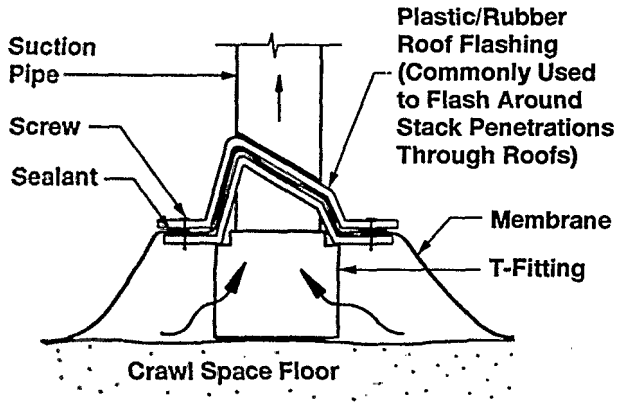

A) Membrane sandwiched, sealed between two roof flashing units; base of flashing prevents membrane from being sucked into open ends of T-fitting

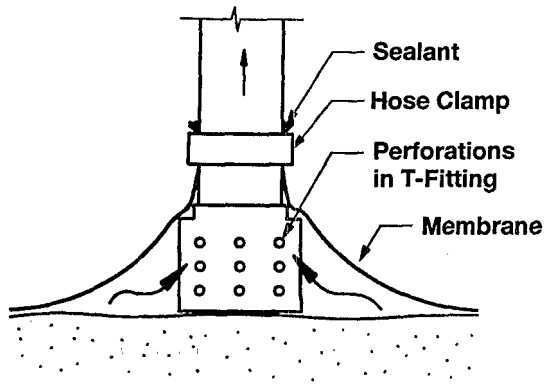

B) Perforations drilled in sides of T-fitting, to prevent membrane from blocking all air flow.

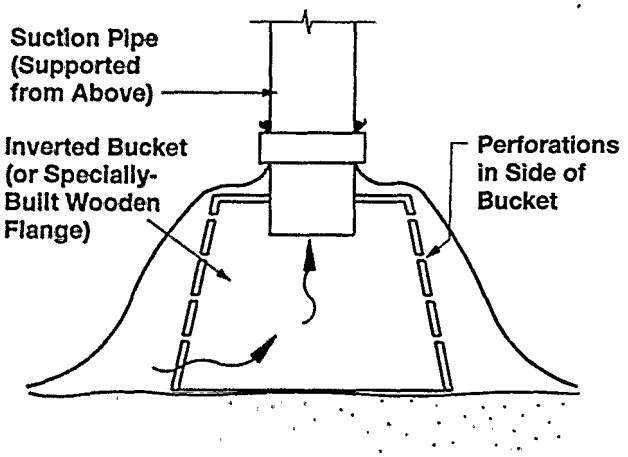

C) Inverted perforated bucket or wooden flange used to elevate membrane above floor and prevent membrane from being sucked into pipe inlet.

Note: A second piece of plywood is sometimes placed on top of the membrane and screwed into the bottom piece, sandwiching the membrane.

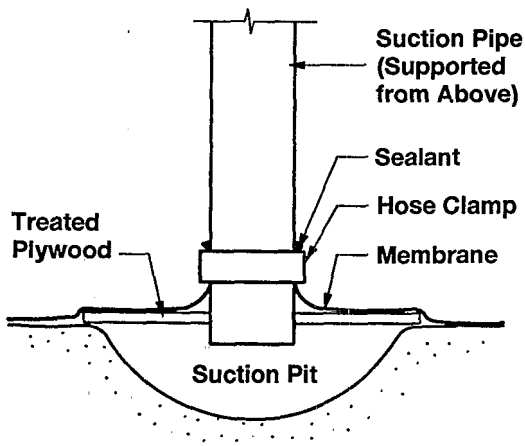

D) Suction pit excavated in crawl-space floor.

Figure 39. Some of the alternative approaches for installing individual SMD suction pipes through the membrane.

tightly against the sides of the suction pipe, compressing the caulk bead, and clamped into place with the hose clamp.

Where the hole has been cut in a manner which leaves a series of pie-shaped membrane segments radiating out from the center of the hole, as discussed above, these segments would be pressed against the caulked side of the pipe and would be bound by the clamp. Any cuts that have been made in the membrane around the hole to enable insertion of a T-fitting or flange should be effectively closed by being pressed against the caulk and the side of the suction pipe by the hose clamp.

Where there is any doubt, additional caulk may be placed at the seam between the hose clamp, the membrane, and the suction pipe to ensure that this penetration is air-tight. Air leakage at this location could significantly decrease what will already be a relatively weak sub-membrane suction field.

Instead of a hose clamp, Figure 39A sandwiches the membrane between two roof flashing units. To seal this configuration, a liberal, continuous bead of polyurethane caulk would be placed around the entire base of the unit above the membrane, between the flashing and the membrane, as indicated on the figure. Likewise, the seam between the upper unit and the suction pipe would be liberally caulked.

Where the approach in Figure 39D is supplemented by a second plywood sheet above the membrane, a continuous bead of sealant is applied around the entire perimeter of the upper plywood, between the plywood and the membrane (How92). A liberal bead of sealant is also applied around the seam between the upper sheet of plywood and the suction pipe.

Except for the cases involving sheets of plywood covering a sub-membrane pit, the other configurations just discussed all involve raising the membrane up several inches around the suction pipe, as necessary to effectively clamp or otherwise seal the membrane around the pipe. This will cause some deformation of the membrane sheet through which the pipe is penetrating. This deformation must not be sufficient to cause crawl-space soil to become exposed at the seam between that sheet and the adjoining sheets. To avoid deformation of the adjoining sheets or undue stresses on the sealed seams, the seams between the penetrated sheet and the adjoining sheets should not be sealed until after pipe installation has been completed.

If a 12-in. overlap has been provided between sheets, this should often be sufficient to prevent the soil from becoming exposed at seams when the membrane is raised. However, to be conservative, somewhat greater overlap might be provided for the sheet through which the pipe will penetrate. Again to be conservative, it would be desirable for the adjoining sheets to overlap on top of sheet with the suction pipe, and for the seams of those sheets to be sealed, even if the seams between sheets are not being sealed elsewhere.

Figure 38C illustrates a unique suction pipe installation approach used by one mitigator (An92) in an effort to increase the extension of the SMD suction to block foundation walls. This approach, analogous to the baseboard duct BWD approach, is an alternative to installing a perimeter loop of sub-membrane perforated piping. In this approach, a slanted strip of treated plywood is sealed against the perimeter wall with a bead of polyurethane caulk, creating a "baseboard duct" around the crawl-space perimeter. The SMD membrane extends up the plywood and is sealed against the wall just above the top of the plywood. The suction pipe is sealed into this baseboard channel at some convenient point around the perimeter. In addition to maximizing treatment of the wall, this approach should maximize treatment of the floor immediately beside the wall; radon entry will likely be highest through this section of floor, due to wind effects against the perimeter walls. However, because of the high flows likely to come out of the walls, it is possible that suction will not extend well toward the center of the membrane.

Sub-membrane piping/SMD approach. The suction pipe for sub-membrane piping/SMD systems consists of two elements: the perforated piping laid beneath the membrane; and the vertical PVC suction pipe which penetrates the membrane and connects to this perforated piping.

- *Sub-membrane perforated piping.* The perforated piping, which may be the flexible black corrugated piping, or rigid PVC piping, is laid on the crawl-space floor in the selected matrix, as discussed in Section 8.2.2.

  Commonly, where the floor is bare soil, the perforated piping will be laid on top of the soil. Where the piping is being laid in the path of potential future foot traffic, a trench might be excavated. The trench could be filled with gravel, and the piping embedded in the gravel. Such trenching would significantly increase the installation effort, and is not often done. One mitigator who has tested SMD systems back-to-back in the same house, with the piping on top of the soil and also with the piping in a trench, reports that installation of the piping in a trench appears to have no impact on radon reduction performance (Kl92).

  Where the crawl-space floor is gravel, the perforated piping can be buried in the gravel relatively easily. However, where the floor is gravel, sub-membrane piping will be less likely to be needed; the individual-pipe/SMD approach will probably be adequate.

  Where flexible perforated piping is used in a contiguous pattern with no branches (such as a straight length or a full or partial loop), it can easily be flexed into whatever pattern is desired. If a perpendicular branch were desired (to connect two parallel lengths of piping, or to extend legs off the main trunk line), a flexible corrugated T-fitting could be snap-fitted into the length of flexible piping. If a rigid PVC T-fitting were used rather than a corrugated fitting, the perforated piping could be connected to the ends of the PVC T using screws and caulk, as discussed later in connection with installation of the vertical suction pipes.

  In many cases where there are two parallel lengths of perforated piping, it will be because there are two adjoining crawl spaces separated by a footing and/or wall. One

US EPA ARCHIVE DOCUMENT

option is to connect these separate lengths using a length of non-perforated flexible corrugated piping that penetrates up through the membrane in one crawl space, snakes over the interior footing, and then descends down through the membrane in the second crawl space. Depending on the configuration of the crawl spaces, each end of this non-perforated connector could connect into the middle of one of the parallel perforated lengths using a corrugated T-fitting (so that the entire matrix takes on the shape of an H). Alternatively, the non-perforated connector might connect the ends of the perforated segments, so that the matrix takes on a contiguous U shape. The penetration of the non-perforated piping through the membranes must be sealed well.

Where there are parallel lengths of piping, another alternative to linking these lengths beneath the membrane would be to install a vertical PVC suction pipe through the membrane into each one, and linking these risers by a piping network in the crawl space above the membrane.

Where rigid perforated pipe is used for the sub-membrane piping, the sections of piping are joined by straight couplings, elbows, and T's as necessary to create the desired matrix. The fittings should be cemented onto the perforated piping to ensure the structural integrity of the matrix over time.

When corrugated or rigid fittings are inserted into the sub-membrane piping network, in accordance with a number of the configurations just discussed, one question is how well the joints should be sealed. If there is some leakage at the joint, but if the joint is beneath a well-sealed membrane, it would seem that the leakage should not be a major problem. In assessing the need for joint sealing in a given installation, the factors that should be considered are the following:

- How big is the leak? If the gap at the joint is large enough, the leakage at that point may become so severe that suction will not effectively extend to more remote points in the sub-membrane piping, and the system will take on the characteristics of an individual-pipe/SMD system with an individual suction pipe penetrating the membrane at the leakage point.

- How far is the leak from the vertical suction pipe? The nearer the leak is to the suction pipe, the greater the impact of the leak can be.

- Does the leak reflect a structural weakness in the joint that may result in the segments of sub-membrane piping becoming disconnected over time? The sub-membrane piping network may be subjected to some physical stresses due to foot traffic in the crawl space. If the joint is sufficiently weak that the segments become disconnected over time, the remote segment of piping on the far side of the break could be cut off from the system.

The joints between flexible corrugated piping and corrugated snap-fittings are generally very tight, and may not need to be cemented, screwed, or caulked together unless the piping is expected to come under particular physical stresses. In this case, the concern is usually not one of leakage around the joint as installed (as long as the membrane is carefully sealed), but rather, is one of the joint becoming separated over time. Where rigid PVC fittings are being installed in a corrugated piping matrix, this joint will be very subject to becoming disconnected unless it is firmly connected with screws or clamps and caulk. Where rigid perforated piping is used for the entire matrix, the joints should all be cemented, because this is easy to do, and because the rigid piping will not flex like the corrugated material and thus may be more prone to having uncemented joints become disconnected as a result of physical stresses.

Where the perforated piping does not form a complete loop, so that there are open ends, the open ends should be capped. Capping the ends will help ensure that the suction is distributed evenly along the length of the piping. If an end is left open, most of the air flow into the piping will likely enter through the open end. Under this condition, the sub-membrane piping/SMD system will tend to take on the characteristics of an individual-pipe/SMD system with individual suction pipes at the locations of the open ends.

- *Vertical suction pipes.* A rigid non-perforated suction pipe is installed into the sub-membrane perforated piping network at a convenient location. Installation of the suction pipe about in the middle of the perforated piping would help improve the uniformity of the sub-membrane suction field. However, unless there is an unusually long length of sub-membrane piping, applying the suction near the middle is probably not critical.

  One approach for connecting the vertical suction pipe into the sub-membrane piping network is to use a rigid PVC, PE, or ABS T-fitting or 90° elbow, as illustrated in the inset in Figure 7.

  A leg of the T or the elbow is directed upward through a hole in the membrane. Depending upon how the membrane is subsequently to be sealed against the pipe, one option is to cut this hole through the membrane as a series of slits radiating out from the center, leaving all of the pie-shaped pieces in place. See the discussion earlier in this section under *Individual-pipe/SMD approach.* The vertical suction pipe is cemented into the upward leg of the fitting.

  The perforated piping must be firmly connected to the T fitting or the elbow beneath the membrane, in a manner such that it will not become disconnected over time. If this joint became disconnected over time, there could be significant leakage of air into the vertical suction pipe, and the system would tend to behave more like an individual-pipe/SMD system with an individual suction pipe at the location of the T.

  If flexible perforated piping has been used, and if a T fitting is being installed in the middle of this piping, the

US EPA ARCHIVE DOCUMENT

piping is severed as necessary to accommodate the T. Each severed end of the perforated piping is then connected to a side of the T using the techniques discussed in Section 6.5 (see *Pipe installation using rigid T-fitting).* Where 4-in. corrugated piping has been used, the piping may be forced inside of (or around the outside of) the 4-in. T leg, and firmly connected using screws or a hose clamp, as appropriate, and urethane caulk. If 3-in. corrugated piping has been used, it should conveniently fit inside the leg of a 4-in. diameter T.

If a rigid 90° elbow is being used instead of a T fitting, the elbow would be connected to the corrugated piping as discussed above, but at one end rather than in the middle.

If rigid perforated PVC piping has been used, this piping is cemented into each open end of the T fitting (or into the elbow) beneath the membrane.

Other approaches for installing a rigid vertical suction pipe into the middle of corrugated piping, rather than using a rigid T fitting, are discussed in Section 6.5 (see *Pipe installation directly into tiles without rigid T).*

The membrane must be sealed tightly around the vertical pipe. This may be accomplished using a hose clamp, as illustrated in Figure 7. A procedure for using a hose clamp for this purpose was discussed earlier in this section (see *Individual-pipe/SMD approach).* Other approaches can also be considered for accomplishing this sealing, such as sandwiching the membrane between sealed roof flashing units (an adaptation of the approach illustrated in Figure 39A for the individual-pipe case).

If there are multiple segments of perforated piping which have not been connected beneath the membrane, a separate vertical suction pipe must be installed in each isolated segment. The resulting multiple risers will be connected by the piping network above the membrane, as discussed in Section 8.6.

8.6 Design/Installation of the Piping Network and Fan

The design and installation of the above-membrane piping network and the fan, for SMD systems would be essentially the same as described in Section 4.6 for a SSD system.

Where multiple suction pipes penetrate the membrane, for either SMD variation, these pipes would be manifolded together, just as with SSD systems in basements. The piping would be hung from the floor joists under the living area overhead. Since the crawl space is not lived-in space, there will usually be a lot of flexibility regarding the routing of the piping through the crawl space. However, care should be taken that the piping not block expected traffic routes (e.g., for maintenance or subsequent replacement of a furnace located in the crawl space).

As with other ASD variations, the exhaust piping from SMD systems may neatly be routed up through the living area of the house to a fan mounted in the attic, as suggested in Figures 6 and 7.

Where the exhaust stack is to be routed up the exterior of the house or through an adjoining slab-on-grade garage, it is common to direct the SMD piping out of the crawl space through the band joist, just as in a basement.

For exterior stacks from systems in vented crawl spaces, some mitigators have occasionally taken the exhaust piping out through a foundation vent, if a vent existed at a convenient location. Using a vent would save the effort of drilling through the band joist and exterior finish. However, this can be a building code violation, if it reduces the net vent area for the crawl space below the area required by code. For this reason, it is recommended that, in general, foundation vents not be used for piping penetrations through the wall.

When there is an indoor stack, the SMD fan will generally be in the attic. When there is an exterior stack (or a garage stack), the SMD fan should be outdoors (or in the garage). Locating the fan outdoors is particularly important when the crawl space is unvented and is part of the conditioned space in the house, which will be the case, e.g., where the crawl space opens to an adjoining basement.

EPA's interim mitigation standards (EPA91b) specify that the fans not be located in the crawl space, even if the crawl space is vented. The thermal stack flows will tend to draw the crawl-space air up into the overhead living area. Thus, any radon released in the crawl space due to leaks on the pressure side of a crawl-space fan could enter the living area.

In houses with vented crawl spaces, where the fan cannot be located in the attic or in an adjoining garage, it can be tempting to mount the fan in the crawl space to avoid the aesthetic impact of mounting the fan outdoors. It would seem that, since the crawl space is vented, any radon released from pressure-side leaks should be diluted by the outdoor air that will infiltrate through the foundation vents. However, limited tracer gas data show that, due to the dynamics of crawl-space houses, over one-half of any radon released by the fan in the crawl space can flow up into the living area even when the crawl space is being naturally ventilated (Na85). As a result, to be conservative, the interim standards require that fans not be in crawl spaces, despite the fact that occupants will not normally be spending much time in the crawl space itself.

In Section 4.6.5 (see *Requirement that fans be outside the livable envelope of the house),* some precautions were discussed that an installer should consider if there were no choice but to mount a fan in a basement in violation of the standards. One other precaution that was considered prior to the standards for fans mounted in crawl spaces is to enclose the fan, the fan couplings, and the pressure-side piping in a tight enclosure fabricated from sheet rock or insulation board (An92). A 1/2-in. hole is drilled in the pipe on the negative-pressure side of the fan, inside the enclosure, in an effort to slightly depressurize the enclosure. The concept is that any pressure-side leaks inside the enclosure would be drawn back into the fan intake, preventing their release into the crawl space. Any such enclosure would have to be tight but would

US EPA ARCHIVE DOCUMENT

also have to enable ready access to the fan for maintenance. As emphasized in Section 4.6.5, there is no evidence that such precautions would compensate for the risks incurred if the fan were mounted in the crawl space, and the precautions thus could never be considered as a substitute for abiding by the standards.

8.7 Sealing in Conjunction with SMD Systems

8.7.1 Sealing the Membrane

The most important sealing in conjunction with the installation of SMD systems will be sealing of the membrane.

As discussed in Section 8.5.1 (see *Sealing the membrane - general),* it is not possible to specify the precise conditions under which various sealing steps will be cost-effective, or to quantify the benefits that will result. However, available data suggest that better radon reduction performance will be achieved if the membrane is completely sealed, and a number of other benefits would be expected as well. As a result, it is recommended that the membrane be fully sealed whenever possible.

Complete sealing of the membrane includes: sealing the seams between sheets; sealing the membrane against the perimeter foundation wall; and sealing the membrane against any interior obstructions, such as support piers and concrete pads. The procedures for sealing these different membrane seams were discussed in Section 8.5.1.

The most critical seams to seal would be: the seams between sheets penetrated by individual suction pipes and adjoining sheets; and seams running beside any sub-membrane perforated piping, including, for example, the seam between the membrane and the perimeter foundation wall in cases where the sub-membrane piping forms a loop around the perimeter. The seam between the membrane and the suction pipe, of course, also must always be sealed well.

8.7.2 Sealing the Block Foundation Wall

Only very limited testing has been conducted to determine the improvements in SMD performance that might be achieved by sealing major openings in the block foundation wall of a crawl space. Despite the lack of data, wall sealing might intuitively be expected to be important in certain cases for two reasons:

- by analogy with basement houses. In basements, SSD appears least able to prevent radon entry into the wall cavities when sub-slab communication is marginal or poor. When there is no gravel on the crawl-space floor, individual-pipe SMD systems might be expected to simulate poor-communication SSD systems. This analogy would suggest that SMD systems with no gravel on the crawl-space floor may be failing to adequately treat wall-related entry.

- from experience in the two study houses having the highest pre-mitigation radon levels in the living area (88-160 pCi/L), where addition of a BWD component (supplementing the SMD system) was necessary in order to reduce concentrations below 4 pCi/L (Ni89, Py90). Both of these houses included other complications which prevented the tests from clearly demonstrating the role of the BWD component and the conditions under which a BWD component will typically be needed in other houses.

Open top voids, if present, would likely be the primary openings warranting closure. The procedures described in Section 7.7.1 and Figure 37 can be considered for closing the top voids.

Figure 38B illustrates one approach for both sealing the entire wall and increasing block-wall treatment by the SMD system.

As with the membrane sealing, sealing of the block foundation wall (and/or adding a BWD component) are most likely to be needed when the pre-mitigation concentrations are high, or when the desired post-mitigation concentration is lower than 4 pCi/L.

8.8 Gauges/Alarms and Labelling

The considerations discussed in Section 4.8, concerning gauges/alarms and labelling for SSD systems, also apply to SMD systems.

As discussed in Section 4.8.1, the gauge/alarm must be located where it will be readily visible to the house occupant. But much of the SMD piping will be in the crawl space, where the house occupant may rarely go.

If the SMD exhaust piping rises up through the house via an indoor stack, a gauge or alarm could be mounted on the stack at some convenient location in the living area where it can be seen or heard. If the stack is rising through a closet in the living area, which will commonly be the case, and if a gauge were mounted in the closet with the pipe, rendering the gauge less visible, the gauge might be supplemented by an audible alarm.

Where the exhaust piping rises through an adjoining garage, the gauge/alarm can be located in the garage.

Where the exhaust piping rises up outside the house, via an exterior stack, a pressure gauge could be mounted at some convenient location in the living area. In this case, the indoor gauge would have to be connected to the piping in the crawl space or outdoors, via a line that penetrates the shell of the living envelope. The ammeter discussed in Section 4.8.1 would be connected to the outdoor fan via the fan wiring.

Some pressure-activated alarms will not be applicable for SMD systems when the stack is outdoors, if they are designed for direct mounting on the suction piping. Such direct mounting would require either that the alarm be mounted on the piping in the crawl space, in which case it may be too remote to be considered readily visible or audible to the occupants; or that the alarm be mounted on the piping outdoors, which will not be feasible if the alarm is not designed for outdoor use.

See the related discussion of pressure-activated alarms outdoors in Section 6.8.

As discussed in Sections 4.8.1 and 6.8, some mitigators report that, during cold weather, moisture can condense or freeze in the narrow tubing that extends from indoor pressure gauges to suction piping in unconditioned crawl spaces or outdoors. When this happens, the gauge will give erroneously low readings. Use of larger diameter tubing, insulation of the outdoor tubing, and advice to the occupant are possible steps to address this problem, as discussed in Section 6.8. Use of the ammeter as the warning device would avoid this problem.

In accordance with the discussion in Section 4.8.1 (see *Pressure gauges),* pressure gauges (and pressure-activated alarms) must tap into the suction piping at a point near the pipe penetration through the membrane in the crawl space. If the gauge or alarm taps in too close to the fan, it may see relatively high suctions at the fan inlet even if there is a major leak in the piping near the membrane, and even if the sub-membrane depressurizations have thus been dramatically reduced. This potential problem is especially acute with pressure-activated alarms, which are often pre-set by the manufacturer such that they are not triggered until suctions drop to extremely low levels (perhaps only 0.2 in. WG). Such low levels can exist near the fan even if there is a total breach in the piping near the membrane.

US EPA ARCHIVE DOCUMENT

US EPA ARCHIVE DOCUMENT

Section 9
Considerations for Active Soil Pressurization Systems

For any of the active soil depressurization systems discussed in Sections 4 through 8, the suction fan could nominally be reversed to blow outdoor air into the soil, rather than drawing soil gas out. As discussed in Section 2.4, active soil pressurization in this manner has been found to be beneficial, relative to soil *de*pressurization, in cases where system flows were high. Active soil pressurization has been found to sometimes be beneficial in the following two situations:

1. With sub-slab systems, as an alternative to SSD, in cases where the underlying soil is highly permeable, including well-drained gravels and highly fissured shales or limestones. Such highly permeable soils would permit greater than normal amounts of outdoor air to flow down through the soil into a SSD system. In these cases, sub-slab pressurization could be an alternative to installing a higher-flow fan or more suction pipes on the SSD system.

2. With block-wall systems, as an alternative to BWD, in cases where depressurization of the leaky block walls would draw enough air out of the basement to depressurize the basement. Such depressurization of the basement could increase soil gas influx and cause back-drafting of combustion appliances.

One typical configuration for a sub-slab pressurization system is shown in Figure 40.

In most respects, the considerations in designing and installing a sub-slab pressurization system or a block-wall pressurization system will be exactly the same as those described in Sections 4 and 7 for the corresponding depressurization systems. The primary difference between pressurization and depressurization designs will be that, with pressurization: a) the fan direction will be reversed; b) provisions will have to be made to prevent outdoor dust and debris from blocking free air flow through the piping; and c) the need for an exhaust stack is eliminated, since the system is no longer discharging a high-radon exhaust gas.

The discussion in this section focuses on the design and installation differences resulting when a sub-slab or block-wall pressurization system is being installed rather than a depressurization system. This discussion draws from the detailed review of data from pressurization systems presented in Section 2.4.

9.1 Selection of the Number of Pressurization Pipes

9.1.1 Sub-Slab Systems

The available data are limited from sub-slab pressurization systems in houses amenable to pressurization. But these data provide no solid evidence that the number of pipes required for pressurization would necessarily be different from the one or two pipes required for SSD systems in houses amenable to SSD.

Information on sub-slab pressurization system configuration are available from six houses amenable to this approach (Tu87, Kn90). These installations included between one and four pressurization pipes. These houses were only moderate in size; their footprints generally ranged from 800 to 1,400 ft^2, with one being 1,800 ft^2. The number of pipes usually corresponded to one pipe per 400 to 700 ft^2, although one house had one pipe per 200 ft^2, and another house had one pipe per 1,000+ ft^2. In half of these installations, this number of pipes was able to reduce indoor levels to below 2 pCi/L from moderately elevated pre-mitigation levels (15-30 pCi/L). The other half, having more elevated pre-mitigation levels (30-141 pCi/L), were reduced below 4 but not below 2 pCi/L.

The number of square feet per pipe is relatively low for these pressurization systems, compared to figures as high as 1,850 to 2,700 ft^2 per pipe with SSD systems in houses with good communication. The values of 400 to 700 ft^2 per pipe with these pressurization systems are more comparable to the values of 350 to 750 ft^2 per pipe encountered in SSD houses having marginal rather than good communication. And the residual indoor radon levels achieved by sub-slab pressurization in these houses are no lower than those commonly achieved by one or two SSD pipes in houses with good communication.

These comparisons would make it appear that sub-slab pressurization systems may, on the average, require more pipes through the slab than will SSD systems. This would be intuitively reasonable. More pipes may be needed to ensure adequate sub-slab pressures and adequate air flow into the soil at all locations under high-flow conditions, than may be needed to achieve sufficient depressurizations everywhere under the lower-flow, more static conditions often characteristic of SSD.

US EPA ARCHIVE DOCUMENT

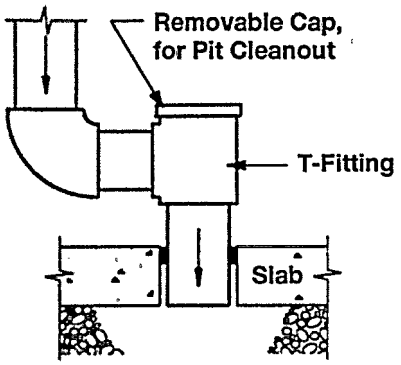

Optional piping configuration, to facilitate removal of debris from pit.

Notes:
1. Closure of major slab openings is important.
2. Fan may also be mounted at grade outdoors.
3. Air filter must be accessible for changing or cleaning.
4. Houses built on well-drained gravel soils (suitable for sub-slab pressurization) will not always have sub-slab aggregate as shown.

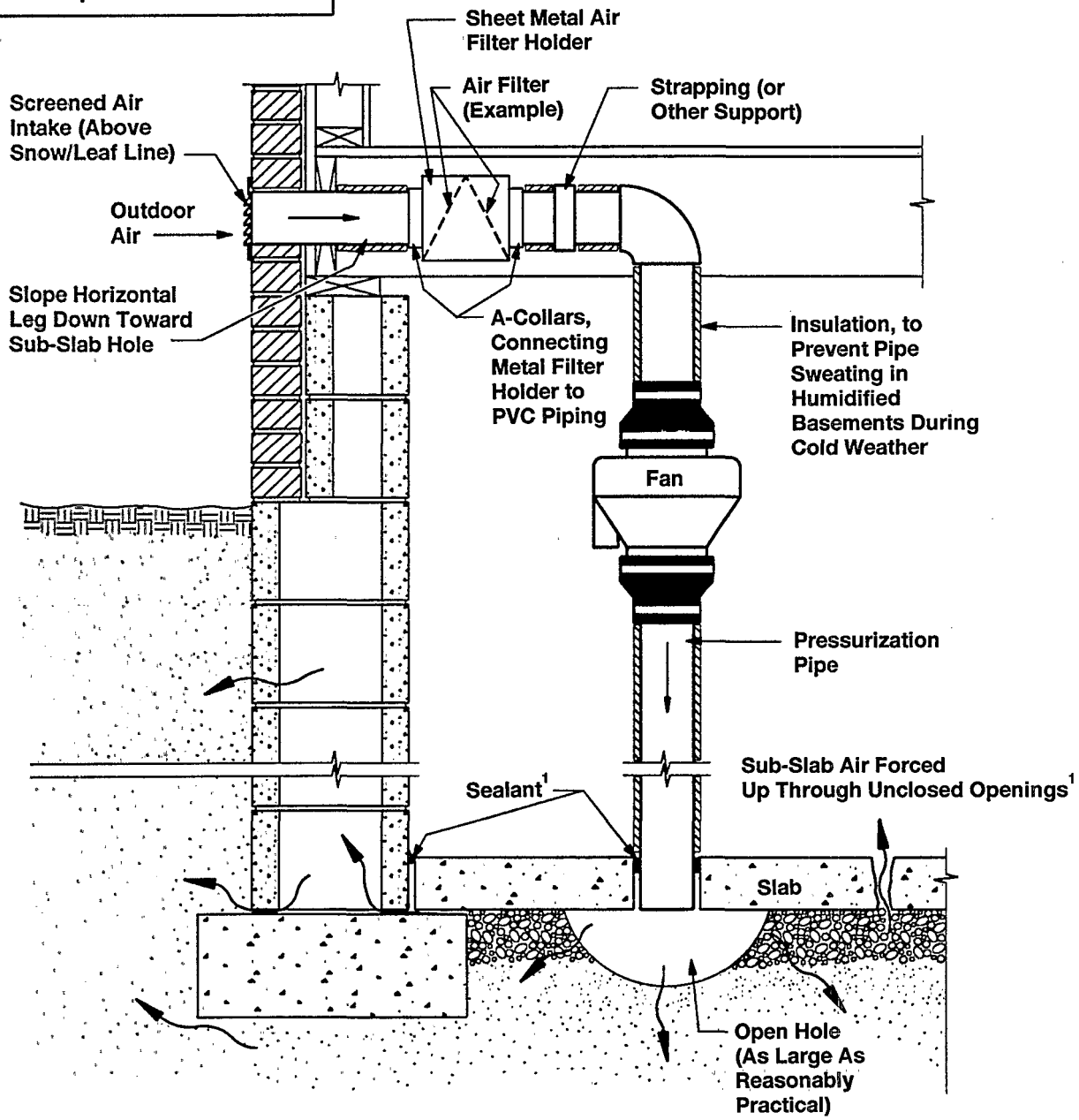

Figure 40. Sub-slab pressurization using one typical approach.

Another option with sub-slab pressurization, rather than adding pressurization pipes, might be to use a higher-capacity fan. For five of the six installations just cited (Tu87), the fans were capable of generating flows of 50 to 200 cfm in the total system, and pressures of 1.25 to 2.0 in. WG in the pipes near the slab, in the given houses. In the sixth installation (Kn90), the fan was a 90-watt tubular in-line fan of the type listed in Table 1.

It must be underscored that most of the sub-slab pressurization installations reported here are among the first such installations, and that no effort was made in the early work to reduce the number of pressurization pipes in these installations, or to optimize the number of pipes and the fan capacity for general application. Therefore, it cannot be definitively concluded from these results that sub-slab pressurization systems will in fact routinely require more pipes. Nor can an assessment be made of the extent to which the number of pipes might be reduced by increasing fan capacity.

9.1.2 Block-Wall Systems

Only three block-wall pressurization systems have been reported (Sc88). One of these represented the individual-pipe variation (Figure 5), and two represented the baseboard duct variation (Figure 35). In all three cases, the systems were operated with the same number of ventilation pipes (or the same baseboard duct configuration) in both pressure and suction, with comparable performance under both conditions. Thus, a block-wall pressurization system would be expected to require the same number of pipes as a BWD system.

This conclusion is intuitively reasonable. Because of the leakiness of the block wall, BWD systems are high-flow systems just as are block-wall pressurization systems. Both BWD and wall pressurization thus probably have a significant ventilation/dilution component in their mechanisms, and both would thus be expected to require a comparable number of pipes to distribute these flows.

9.2 Selection of Pressurization Pipe Location

It is not apparent that the location of pressurization pipes (in houses amenable to soil pressurization) should necessarily be any different from that for depressurization systems. Pipe location for SSD suction pipes was discussed in Section 4.2; the location for individual BWD suction pipes and for baseboard ducts was discussed in Section 7.2.

With SSD systems in houses having good sub-slab communication, Section 4.2 indicates that the one or two SSD suction pipes might be located just about anywhere convenient. The flows in SSD systems are low enough such that, even if a pipe is placed at one end of a house, the suction field can extend beneath the entire slab. With sub-slab pressurization systems in houses underlain be highly permeable soils, location of the pressurization pipe near one end intuitively might result in excessive flows of air out through the soil near that end of the house. If that occurred, sufficient flows might not be established at the remote end of the house. Thus, in sub-slab pressurization systems having only one pressurization pipe, it might be advisable to locate that pipe at a relatively central location, although there are no data confirming that this is in fact required.

9.3 Selection of Pressurization Pipe Type and Diameter

The type and diameter of piping that would be used for sub-slab and block-wall pressurization systems would be the same as that for SSD and BWD systems, discussed in Sections 4.3 and 7.3.

Even though the pressurization piping will now be handling outdoor air rather than radon-containing soil gas, it is still necessary to use rigid PVC, PE, or ABS piping. Flexible ducting and flexible clothes drier hose are still not acceptable, due to reduced durability, difficulty in achieving sufficiently gas-tight joints, and a tendency to sag, providing sites for accumulation of condensate. Leakage or flow restriction resulting from any of these problems with the flexible ducting would reduce pressurization system flows, thus likely reducing performance.

The flows in a typical sub-slab pressurization system will tend to be higher than those in a typical SSD system, since the pressurization approach will be used only in cases where highly permeable native soil contributes to high flows. In the five sub-slab pressurization systems for which flow data were reported, flows generally ranged from 35 to 200 cfm, averaging 100 cfm. This compares with the range of 20 to 100+ cfm for SSD systems, averaging perhaps 50 cfm.

From the discussions in Sections 4.3.2 and 4.6.1, it is clear that, in sub-slab pressurization systems, it will always be desirable to use piping of at least 4 in. diameter. Sub-slab pressurization flows will essentially always be too high to permit the use of 2-in. piping, sometimes considered in low-flow SSD systems, and will often be too high for use of 3-in. piping.

At the highest sub-slab pressurization flows (150 to 200 cfm), it could seem desirable to use 6-in. diameter piping, since pressure losses in 4-in. piping would be about 1.5 to 2 in WG per 100 ft at those flows (see Figure 13). However, the limited experience with sub-slab pressurization systems has shown that in houses where sub-slab pressurization is preferred over SSD, pressurization gives adequate performance with 4-in. piping. Thus, 6-in. piping, though it would probably be helpful in particularly high-flow installations, does not really seem to be necessary. Where a central trunk line down the length of a basement connects to multiple pressurization pipes in the basement, it might be desirable for the trunk line to be 6-in. piping.

Flows in a typical stand-alone block-wall pressurization system will likely be about the same as those in a typical stand-alone BWD system; the leakiness of the walls should create about the same flows in both cases. Thus, the pipe diameters for block-wall systems should be the same, regardless of whether the system is operating in suction or in pressure.

US EPA ARCHIVE DOCUMENT

9.4 Selection of Pressurization Fan

As just discussed, flows in sub-slab pressurization systems can be relatively high. From the limited available data, flows apparently can range from about 35 to 200 cfm, averaging about 100 cfm. The actual flow will depend on the soil characteristics and the fan performance curve.

At the low end of this range, either a 90-watt in-line tubular fan (Section 4.4.1) or an in-line radial blower (Section 4.4.2), or their equivalent, could be a reasonable choice. As flows approach the average of about 100 cfm, the radial blowers would no longer provide pressures any greater than those from the tubular fans. Thus, at flows approaching 100 cfm, any added cost for a radial blower might be an unnecessary investment; a 90-watt tubular fan (or equivalent) could be the more logical choice.

At the upper end of the flow range (150 to 200 cfm), a 100-watt tubular fan with 6- or 8-in. couplings (Section 4.4.1), or equivalent, might be considered. In fact, the 90-watt tubular fans may not always be able to maintain flows this high if there is any significant length of 4-in. piping in the system. If the 90-watt fan were used, the system would possibly operate at a lower flow, consistent with the fan's performance curve and with the sub-slab flow characteristics of the house.

Sub-slab pressurization systems may require high flows to achieve the necessary ventilation/dilution of the gas beneath the slab, and to maintain the necessary sub-slab pressures. Consequently, the smaller, 50- to 70-watt tubular fans discussed in Section 4.4.1, which can move only about 120 to 160 cfm at zero static pressure, will likely be insufficient for soil pressurization applications. And the high-suction/low-flow fans discussed in Section 4.4.3, for SSD systems in houses with poor sub-slab communication, would never be applicable.

Because of the leakiness of block walls, block-wall pressurization systems should have the same flows typical of stand-alone BWD systems, namely, 100 to 200 cfm. Thus, the 90- to 100-watt tubular in-line fans (or their equivalent) will usually be the logical choice for block-wall pressurization systems, as discussed in Section 7.4 for BWD systems.

9.5 Installation of Pressurization Pipes Beneath the Slab or Into the Block Walls

9.5.1 Sub-Slab Systems

The installation of sub-slab pressurization pipes beneath the slab will be essentially identical to the installation of SSD pipes, described in Section 4.5. Almost all of the sub-slab pressurization installations reported to date have involved pipes installed vertically down through the slab from indoors, as illustrated in Figure 40 (analogous to the configuration described in Section 4.5.1). But in concept, any one of the six alternative installation approaches for SSD pipes described in Section 4.5 could also be used for pressurization pipes.

Investigators have often observed cases with sub-slab pressurization systems where dust and other outdoor debris have been drawn into the system and deposited beneath the slab where the pressurization pipe penetrates (Pr89, NYSEO91, An92). This deposition has increased the back-pressure in the piping and reduced the effectiveness of the system, reducing the flow beneath the slab. Such deposition can create a problem despite the presence of an air filter in the system to remove outdoor dust from the intake air, as discussed in Section 9.6.

Excavation of a pit beneath the suction pipe, as in Figure 40, should help reduce the impact of such deposition by distributing the dust over a larger surface area. As discussed in Section 4.5.1 (see *Excavating a pit beneath the slab),* one primary purpose of such a pit with SSD systems is to reduce suction loss as the soil gas accelerates up to pipe velocity. With sub-slab pressurization systems, the pit will also serve to reduce pressure drop in an analogous manner. However, the pit may also reduce the impact of deposited dust and debris in hindering flow.

Some mitigators have found that the use of a sub-slab pit, combined with the use of an intake air filter, can be insufficient to prevent unacceptable flow blockage by dust deposition (NYSEO91, An92). A sufficiently thick and low-permeability layer of fine dust which has penetrated the filter can still deposit on the surface of the pit over time, restricting flow through the surrounding permeable soil.

One approach for addressing this problem is to install the pressurization pipe in the manner shown in the inset in Figure 40, to facilitate subsequent removal of deposited material from the pit (An92).

By this technique, a short stub of piping is mounted through the slab, and a T fitting is cemented onto this stub just above the top of the slab, as shown in the inset. One end of the top of the T is cemented onto the stub, with the other end of the top extending upward; the leg of the T extends horizontally, parallel with the slab. The vertical pressurization pipe is connected to this horizontal leg with a 90° elbow. The end of the T that is extending upward is capped with an air-tight flexible PVC cap, held onto the T with a hose clamp. This cap is of the same material as the flexible couplings used to connect the fans to the piping.

The cap can then be removed whenever the system pressure gauge indicates that there may be an unacceptable accumulation of deposited material. Access to the pit through the piping stub permits the material to be vacuumed or otherwise cleaned out of the pit by the homeowner or by service personnel.

This approach will increase the piping pressure loss by virtue of the additional 90° bend and the T that are incorporated into the piping system. However, in cases where significant deposits of ambient dust are anticipated from experience, this configuration will be far superior to the option of periodically removing and re-installing the pressurization pipe in order to remove the deposits.

US EPA ARCHIVE DOCUMENT

9.5.2 Block-Wall Systems

The installation of pressurization pipes into the block walls, and of baseboard ducting for wall pressurization systems, will be identical to the installation of BWD piping, described in Sections 7.5.1 and 7.5.2.

9.6 Design/Installation of Piping Network and Fan

Many of the considerations in designing and installing the piping network and the fan for soil pressurization systems will be similar to those for soil depressurization systems, discussed previously in Section 4.6. However, there will be some important differences.

These differences are illustrated in Figure 40 for a sub-slab pressurization system. Figure 40 is to be compared with the SSD diagram in Figure 1. While other sub-slab pressurization configurations are possible, as discussed later, the one shown in Figure 40 is reasonably typical. Although figures for block-wall pressurization systems are not shown here, schematics for block-wall pressurization installations would involve modifications to the BWD systems illustrated in Figures 5 and 35, similar to the modifications made in Figure 1.

Pipe routing and installation between the pressurization points and the fan. The requirements for pipe routing and installation in both sub-slab and block-wall pressurization systems are very similar to those described for SSD systems in Sections 4.6.2 and 4.6.3, and for BWD systems in Section 7.6.

The horizontal piping runs must still be sloped downward toward the vertical piping into the slab or walls to allow condensate drainage, and care must be taken to avoid low points in the piping where condensed moisture can accumulate. With depressurization systems, the concern was primarily about condensation of soil gas moisture during cold weather, and about rainwater that enters the stack. With pressurization systems, the concern is primarily about condensation of humidity in the outdoor air during air conditioning season.

As with SSD and BWD systems, the piping joints must be carefully cemented. Even though the piping is handling outdoor air—and even though leaks on the pressure side of the fan would thus simply result in fresh air being blown into the house, which might seem innocuous—such pressure-side leaks could reduce the flows and pressures being delivered to the soil (or into the block walls). They could also be suggesting a problem with the physical integrity of the piping network.

Leaks on the suction side of the fan, if inside the house, would result in house air being drawn into the system. In theory, this might create depressurization within the house, and increase the system heating/cooling penalty. More of the air being blown beneath the slab (or into the walls) would be house air rather than outdoor air. However, much of the air being blown beneath the slab (or into the walls) is likely flowing back into the house, through cracks and other openings in the slab and walls. Thus, it is not clear whether such suction-side leaks would really have any serious impact. Nevertheless, the mitigator is still advised to cement the suction-side joints carefully.

Some mitigators recommend insulation of all indoor piping (An92, Br92). Such insulation is shown in Figure 40. This insulation will reduce "sweating" on the outside of the pipes, especially in humidified basements during cold weather, and hence will reduce or avoid water stains in finished areas. As a secondary benefit, it will also reduce condensation inside the pipe during hot weather.

Because of the high flows characteristic of pressurization systems, insulation of the piping will also serve to reduce flow noise. The average flow of 100 cfm observed in some sub-slab pressurizations systems to date corresponds to a flow velocity of 1150 ft/min in 4-in. piping, approaching the velocity range at which flow noise can start to become objectionable.

Need for a filter on the air intake. One key difference in the design of the piping network for soil pressurization systems is that an air filter is necessary to remove dust, pollen, and other debris from the incoming outdoor air. One possible configuration for such an intake filter is shown in Figure 40.

This air filter is important for sub-slab pressurization systems, where deposited debris in the sub-slab pit has been found on some occasions to increase system back pressure and reduce flows. The air filter may be less critical in block-wall pressurization systems (especially of the individual-pipe variation), since the void network into which the pressurization air is discharging is so open that interference from dust deposition is intuitively less likely.

The recommended location for the filter is upstream of the fan, just as filters in forced-air heating systems are upstream of the central furnace fan. This location will provide some protection for the fan, as well as reducing deposition in the sub-slab pit. Upstream location of the filter in the figure is possible because the figure shows the fan inside the house. As discussed later, the fan can also be located outside the house; in that case, the filter will be downstream of the fan if the filter is indoors.

The filters are usually housed in sheet metal boxes, similar in some respects to the sheet metal housings for filters in forced-air heating systems. At least one vendor markets a sheet metal filter housing that could be installed in-line in the PVC piping, equipped with a gasketed door for access to the filter. This is the type of filter holder illustrated in Figure 40. This sheet metal box could be connected to the PVC piping using sheet metal A-collars, as in the figure. With the A-collars properly installed, and with the access door gasketed, the air leakage through joints associated with the filter housing should be reasonably limited.

The filter shown in Figure 40 is a type which is bent into the shape of an inverted V. Pleated paper filters are recommended (An92, Br92). Pleated units have increased surface area and thus achieve better removals, have better dust-holding capacity (reducing frequency of replacement), and create less pres-

US EPA ARCHIVE DOCUMENT

sure drop. These filters are more efficient than the filters typically used in central forced-air furnace systems.

Some mitigators recommend against using washable wire mesh filters, since these are less efficient (Br92). Others feel that washable filters are satisfactory, since the ease of cleaning may encourage the occupants to clean the filters more regularly than would be the case if they had to buy a new replacement each time (An92).

Instead of the gasketed-door filter housings with V-filters, as shown in the figure, one could also consider the slotted filter housing design common to many forced-air heating systems, where the filter slides into the slot. If such a housing were used, a sheet metal cover for the slot should be included to reduce air leakage (An92).

Periodic replacement or cleaning of the filter is critical. Otherwise, the pressure drop across the filter will increase and flows will decrease. Also, dust may "break through" the filter, depositing in the fan (thus reducing fan performance) or in the sub-slab pit (also reducing flows). Even the pleated paper filters, which can go the longest between replacement, must be replaced about twice a year (An92).

For this reason, the filter must be located where it can be easily accessed by the house occupant for filter changing or cleaning. In the configuration shown in Figure 40, the filter housing is up between the overhead floor joists in the basement. The gasketed door in this case would likely be on the bottom of the housing, for easy access to the filter.

General considerations regarding fan location and exhaust piping design. The primary difference between pressurization and depressurization systems, in terms of the piping network and the fan, is associated with the fan and "exhaust" part of the system. Because the fan is blowing fresh air beneath the slab or into the wall voids, there will be no high-radon fan exhaust in pressurization systems, and all of the system piping will contain outdoor air. These facts impact the system design in two major ways:

- first, the fan can now be inside the living envelope, if desired, because there is no longer any risk that high-radon gases can leak out of the pressure side of the fan; and

- second, there is no longer any need for an exhaust stack up through the interior or the exterior of the house. The "exhaust"—actually, the fresh air intake—can be at grade level.

Fan location and mounting—indoor fan. There are basically two options for mounting the fan: indoors or outdoors. In both cases, of course, the fan is mounted with its direction reversed, relative to its direction for the depressurization systems, so that outdoor air is being blown beneath the slab (or into the block walls).

The first fan mounting option, shown in Figure 40, is to locate the fan inside the house. In this case, the appearance of the air intake outside the house can be a screened air intake grille, as shown in the figure. The 4-in. diameter intake piping would likely penetrate the band joist (or some other convenient location on the side of the house), and the intake grille would be mounted at the end of this pipe. This intake grille must be mounted at a sufficient height on the side of the house such that it will not become blocked by snow or by accumulated leaves or other debris.

As discussed above (see *Need for a filter on the air intake),* the indoor fan should be mounted downstream of the intake air filter, to provide some protection from the dust and debris entrained with the outdoor air.

The indoor fan should be mounted vertically, as shown, so that condensed moisture can drain down into the sub-slab region (or into the block walls). As indicated previously, the threat of condensation inside the pipe will be greatest during hot, humid weather when the house is air conditioned.

As depicted in the figure, vertical mounting of the fan is most conveniently done by installing it in the vertical pipe extending down into the slab. This is easy to do when there is only one pressurization pipe. If there were multiple pipes manifolded together, the fan must be mounted in the trunk line upstream of the point at which the piping leading to the different pressurization pipes splits off from the trunk. Location of the fan downstream of this split would result in the fan depressurizing the pipes upstream of the split.

If there were additional pressurization pipes beyond the one shown in Figure 40, the horizontal trunk line leading to the other pipes would have to split off at a point in the vertical pipe below the fan. Even if the fan were placed as close as possible to the basement ceiling, the horizontal trunk line would be some distance below the floor joists. This will usually not be an acceptable location for the horizontal run across the basement. Thus, where there are multiple pressurization pipes, one may wish to consider other options: mounting the fan outdoors, discussed later; or mounting the fan horizontally with provisions for water drainage out of the housing, an approach which could void the warranty on at least one vendor's fans.

The soil pressurization fan should be mounted onto the system piping with air-tight couplings, just as with depressurization systems. See Sections 4.6.4 and 4.6.5. As discussed previously in this section (see *Pipe routing and installation between the pressurization points and the fan),* the fact that the fan will be handling outdoor air rather than soil gas does not eliminate the need for the joints to be air-tight.

Fan location and mounting—outdoor fan. The second fan mounting option is to mount the fan outdoors.

In this option, the portion of the system that is outdoors could look very much like that shown in Figure 27 for the case of SSD with an exterior stack, except that there would be no stack above the fan. In place of the air intake grille shown in Figure 40 on the side of the house, the piping would extend out through the side of the house; an upward-directed 90° elbow would be mounted on the outside end of this piping; and the fan would be mounted vertically on a stub of pipe

US EPA ARCHIVE DOCUMENT

extending up from this elbow, oriented to blow outdoor air into the piping.

Where an in-line duct fan is mounted beside the house in this manner, a screen must be installed on the intake, for two reasons. One reason is to prevent children and pets from reaching into the fan blades. The other reason is to prevent debris from entering the fan. Intake grilles for this purpose are sold by some of the fan manufacturers.

When the fan is mounted outdoors, the air filter (which will usually be inside the house) will be on the pressure side of the fan, rather than on the fan inlet as in Figure 40. Thus, outdoor fans will not have the degree of protection from outdoor dust and pollen that will be possible for indoor fans mounted downstream of the filter. The screens on the inlets to outdoor fans will not be effective at removing fine dust.

One option that might be considered when the fan is mounted outdoors is to mount the fan horizontally, directly on the horizontal pipe where it penetrates the band joist. In this case, the fan would be mounted at the location where the screened air intake grille is shown in Figure 40. Because the fan is outdoors, and is at the same temperature as the surrounding outdoor air, the threat of moisture condensation in the fan housing is largely eliminated. Thus, this restriction on horizontal mounting would be avoided. However, entrainment of rainwater could still result in some accumulation of water inside the housing with horizontally mounted fans, and some provision for drainage of this water out of the housing would be necessary (see Section 4.6.5, *Mounting exterior or garage fans)*. Horizontal mounting may void the warranty on some fans.

9.7 Sealing in Conjunction with Soil Pressurization Systems

The slab and wall sealing suggested in conjunction with SSD systems (in Section 4.7) and with BWD systems (Section 7.7) are also appropriate for the analogous soil pressurization systems.

With soil depressurization systems, the sealing aids in the distribution of the suction field beneath the slab. The sealing also reduces the risk that soil gas will enter the house through the sealed entry route, in the event that the depressurization is not fully effective for that route.

With soil pressurization systems, the sealing provides an analogous benefit. Soil pressurization systems function in part by pressurizing the sub-slab (or wall cavity) region, preventing soil radon from moving by convection into these regions. Sealing will aid in distributing the pressure field, thus improving pressurization system effectiveness.

Soil pressurization systems can also be viewed as functioning by creating relatively high flows under the slab (or in the walls). These high flows create the pressure field indicated in the preceding paragraph, preventing convective soil gas flow toward the foundation. Flows down into the soil can also overcome the diffusion of radon toward the foundation. In addition, the high flows can be viewed as ventilating the sub-slab or wall cavities, diluting any radon that does reach the foundation. Since any radon that does reach the sub-slab will likely be forced up into the house through slab cracks, the reductions in sub-slab radon levels must more than compensate for the increased flow of sub-slab gas into the house.

Accordingly, in addition to increasing sub-slab or wall cavity pressure, the sealing of slab and wall entry routes can also be viewed as aiding system performance by forcing more of the flow to be directed into the soil rather than back into the house. Directing the flow away from the house can be viewed as helping ensure that the diffusive movement of radon toward the foundation is overwhelmed, and as increasing the extent to which the air ventilating the sub-slab is sweeping the radon away from the house rather than into the house. Sealing may also reduce the extent to which other sub-slab "pollutants" (such as moisture, termiticides, and fungi) may be forced into the house by the system.

9.8 Gauges/Alarms and Labelling

The considerations discussed in Sections 4.8 and 7.8, concerning gauges/alarms and labelling for SSD and BWD systems, also apply to soil pressurization systems.

Of course, for soil pressurization systems, any pressure gauges or detectors installed on the system will be set to monitor elevated pressure rather than suction.

In sub-slab pressurization installations where back-pressures can repeatedly build up over time due to deposition of dust in the suction pit, a pressure gauge on the system piping (or a pressure-actuated alarm) will alert the occupant when the pit must be cleaned out for continued satisfactory system performance.

US EPA ARCHIVE DOCUMENT

US EPA ARCHIVE DOCUMENT

Section 10
Considerations for Passive Soil Depressurization Systems

Passive soil depressurization systems eliminate the fan used in ASD systems. Instead they rely upon natural thermal and wind effects to create the desired depressurization. They may also depend in part on the "pressure break" mechanism discussed in Section 2.5. Passive systems incorporate a fan-less stack which usually rises up inside the house and through the roof, with suction being created by the natural thermal stack effect in the house and by the flow of winds over the roofline. These naturally induced suctions are very low, compared to the suctions that a fan could produce.

Because of these low suctions, and the potential variation in passive performance as ambient temperatures and winds vary, the performance of passive systems has been unpredictable. Much of the reported testing of passive soil depressurization installations has been in newly constructed houses, where steps were taken during construction in an effort to improve passive performance. These steps included: good sub-slab aggregate, to provide the best possible communication; a sub-slab network of perforated piping, to facilitate distribution of the weak suction field; and a relatively tight slab, to reduce the extent to which the weak suction field would be further weakened by house air leakage into the system.

Passive soil depressurization systems should be considered for retrofit into existing houses only in cases where:

a. The required radon reductions are only moderate (no more than about 30 to 70%).

b. The house appears potentially amenable to passive treatment, preferably including: good sub-slab aggregate; a tight slab, to reduce air leakage into the system; a poured concrete foundation wall, to minimize air leakage from the walls; and a tight soil, to reduce air leakage through the soil. Existing sub-slab perforated drain tiles are potentially helpful but apparently not really necessary.

c. The mitigator or the house occupant are prepared to monitor system performance for an extended period, to determine whether the system is routinely overwhelmed under certain weather or appliance usage conditions, and will add a fan if needed.

d. There is a strong preference on the part of the mitigator or homeowner for a passive system.

A given passive system would always provide greater radon reductions if it were activated with a fan.

Because passive systems generate such weak suctions and low flows, they will be potentially applicable only to SSD systems, DTD systems with the perforated piping *inside* the footings (usually sump/DTD systems), and SMD systems with a completely sealed membrane. They will not likely ever be applicable to DTD systems having *exterior* drain tiles, because the weak suction will likely not extend into the sub-slab region. Nor will they likely ever be applicable to BWD systems, because of the high flows required for such systems to be effective.

The discussion in this section focuses on the design/installation differences that would result when a passive depressurization system is being installed rather than an active system. This discussion draws from the detailed review of the limited data from passive systems, presented in Section 2.5.

10.1 Selection of the Number of Suction Pipes

10.1.1 Passive SSD Systems

A passive SSD system will require more suction pipes than an active SSD system to achieve a given radon reduction.

One to two passive SSD pipes were installed in seven basement houses in Maryland having reasonably good and uniform sub-slab communication (Gi90), corresponding to one pipe per 700 to 1,100 ft^2. The one to two pipes yielded radon reductions ranging from zero to 90% in these houses. The post-mitigation radon concentrations averaged between 5 and 8 pCi/L in all except one house, where they averaged about 2 pCi/L. By comparison, when each of these systems was activated by adding a fan, the radon reductions increased to 70 to 99%, with residual radon levels of about 1 pCi/L and less in all houses.

This good performance with the active SSD systems is consistent with that which would be expected when there is one pipe per 700-1,100 ft^2 in houses having good sub-slab communication (see Section 4.1.1). Clearly, if most of these passive SSD systems were to reduce levels even to 4 pCi/L, the passive systems would have to be designed with more pipes, so that each pipe only had to treat a smaller area. And to achieve the reductions obtained with the active systems (1 pCi/L), the

added number of passive pipes could be substantial. It is doubtful that with any practical number of suction pipes a passive SSD system could ever match the observed performance of the active systems in most of these houses.

In view of the limited amount of experience with passive systems, it is not possible to specify more definitively how many square feet should be treated by each passive SSD pipe to reliably obtain indoor levels below 4 pCi/L with passive SSD systems.

10.1.2 Passive DTD Systems

All experience with passive DTD systems has involved a single vertical suction pipe connecting to the sub-slab perforated piping, usually at a sump. These passive systems provided radon reductions of 20 to 75% in two existing houses (Gi90), and 9 to 90% (averaging 64 to 70%) in a number of newly constructed houses (Sau91a, Sau91b). (By comparison, activation of each of these installations by adding a fan increased reductions to above 90%, reducing all of the houses to 1 pCi/L and less.)

There are no data to suggest whether a second passive suction pipe connected into the perforated piping in a given house (e.g., on the opposite side of the basement from the first pipe) would have improved the passive performance.

In counting the number of suction pipes in passive DTD systems, one also has to consider the extent of the perforated piping beneath the slab. This perforated piping is a potentially important contributor in distributing the passive suction.

In the retrofit installations in the existing houses in Maryland (Gi90), the performance of the two passive sump/DTD systems (20 to 70% reduction) was no better, on average, than that in the seven passive SSD installations (zero to 90% reduction). Some of the passive SSD systems gave better performance than did the sump/DTD systems.

Among the passive DTD installations in newly constructed houses (Sau91a, Sau91b), the performance range (9 to 90% reduction) was the same as for the passive SSD retrofit installations (Gi90), but the average of the DTD systems (64 to 70%) was somewhat higher than the average of the SSD systems (about 55%). This very limited data base may be suggesting that the sub-slab perforated piping was aiding system performance to some limited extent. On the other hand, the somewhat better results with passive DTD in the newly constructed houses—if real—may instead be resulting from improved slab sealing implemented during construction, rather than from the drain tiles.

In summary, the sub-slab perforated piping may or may not be a contributor in improving the performance of passive DTD systems relative to passive SSD systems. Any performance improvements achieved with the perforated piping may be influenced by the extent and configuration of this piping beneath the slab, discussed in Section 10.2. Where a house is being built and where it is desired to increase the likelihood that a passive soil depressurization system will give adequate performance, the builder may wish to install perforated piping beneath the slab during construction. However, where a passive system is being considered for retrofit into an existing house that does not have sub-slab piping to begin with, there is no clear incentive to justify the extensive effort that would be required (including removal and restoration of part of the slab) to retrofit perforated piping.

10.1.3 Passive SMD Systems

Passive SMD systems have been reported in two houses, each of which had a basement adjoining the crawl space (Gi90). In one of these cases, the passive SMD system was supplemented by a passive SSD system in the basement. In both cases, the sub-membrane piping/SMD approach was used, with a length or loop of perforated piping placed beneath a completely sealed membrane. One vertical suction pipe connected to the sub-membrane piping.

In the house where the basement was not treated, which had gravel on the small crawl-space floor, and where the furnace flue served as the passive stack, this passive SMD system was sufficient to reduce concentrations below 4 pCi/L (a reduction of 20 to 70%). In the other house, reductions were only 0 to 30%, and levels remained significantly elevated, due to marginal and uneven communication beneath the basement slab (perhaps in addition to any inadequacies in the crawl-space treatment).

One mitigator also reports achieving reductions of about 60% or greater in crawl spaces with poured foundation walls using a length of perforated piping beneath a completely sealed membrane (Kl92). In these cases, the passive stack simply penetrated the band joist and terminated near grade.

These limited results do not permit definitive conclusions regarding the number of suction pipes or the need for sub-membrane perforated piping in passive SMD systems. Among the questions that cannot be addressed from these limited data are: the importance of the sub-membrane piping under various conditions (crawl-space size, block vs. poured foundation walls, gravel vs. no gravel on the floor); the number of suction pipes that might have been needed on that sub-membrane piping under these various conditions; and the number of suction pipes that might have been needed had the individual-pipe/SMD approach been used. Intuitively, it would seem that sub-membrane piping could be important for passive SMD systems, at least when there is no gravel on the floor. Also, it is intuitively apparent that complete and careful sealing of the membrane will always be required to improve passive SMD performance and to reduce the number of suction pipes.

10.2 Selection of Suction Pipe Location

10.2.1 Passive SSD Systems

There are insufficient data to enable definitive guidance regarding the optimum location for passive suction pipes. Intuitively, since the weak passive suction field may not be able to extend very far, it may be desirable to locate the suction

piping near the soil gas entry routes, such as the wall/floor joint.

However, the pipes should not be located too near to these routes unless the routes can be sufficiently well sealed to avoid excessive air leakage into the passive system. Excessive leakage of house air into a low-flow passive suction pipe from a nearby unsealed entry route could prevent the suction field produced by that pipe from extending to other, more remote entry routes.

With the seven passive SSD systems retrofit into existing houses having good sub-slab communication (Gi90), some of the most effective systems had the one or two suction pipes near the perimeter. However, some systems with centrally located pipes also gave generally similar performance. The data are far too limited to show any consistent difference between perimeter vs. central pipe location.

10.2.2 Passive DTD Systems

With the passive DTD systems, a variety of sub-slab perforated piping matrices have been tested. Some installations have involved perforated piping loops that extended around the entire perimeter (Ta85, Ka89, Gi90, Sau91a, Sau91b). This configuration will commonly be present in existing houses having sumps, and has been installed in some newly constructed houses to enable passive DTD. Intuitively, a perimeter loop configuration should be the most effective at distributing the suction near the major entry route (the wall/floor joint).

In some of the newly constructed houses that have been tested, the perforated piping may have been laid in as a single length extending for some distance down the center of the slab (Ka89, Sau91a, Sau91b).

The most extensive sub-slab piping network that has been considered for passive DTD systems was tested in early work in Canada (Vi79), and was incorporated into guidelines by the Central Mortgage and Housing Corp. of Canada for new housing built near uranium mining and processing sites. As discussed in Reference EPA88a, this extensive matrix involved numerous parallel lengths of 4-in. diameter perforated piping extending down the length of the slab from end to end, capped at each end. The pipes were laid so that no point beneath the slab would be more than 1 to 2 ft away from a pipe. The parallel lengths of piping were connected beneath the slab by a 6-in. diameter manifold pipe which ran perpendicular to the parallel perforated pipes (i.e., from the front of the house to the rear) near the center of the slab. This manifold was connected to the passive stack which rose through the house. As discussed in Section 2.5, even this extensive piping network was unable to reliably maintain 18 study houses below 4 pCi/L year around in passive operation (Vi79).

In summary, the limited experience with these various sub-slab piping network configurations do not permit any conclusions regarding whether any one of the configurations will commonly give better performance than the others. With recent experience, it is now apparent that extensive networks are probably not warranted, if there is a good aggregate layer under the slab. Intuitively, a perimeter loop of perforated piping might be expected to enable better passive treatment of the wall/floor joint than would a central length of piping, although there are no data to verify this intuition.

The preceding discussion, concerning the selection of the sub-slab piping configuration for a passive DTD system, is applicable in practice only to new construction. In new construction, the piping can be laid in any desired configuration before the slab is poured.

As discussed in Section 10.1.2, available data suggest that perforated piping does not provide a sufficiently distinct improvement in passive performance to warrant the extensive effort that would be required to retrofit sub-slab piping into an existing house where it was not present to begin with. In houses having good sub-slab communication, passive SSD appears to perform roughly as well as passive DTD. In houses having marginal or poor sub-slab communication, passive soil depressurization should be eliminated as an option at the outset. In reduced-communication houses, an active system would be the reasonable approach, rather than tearing out a portion of the slab to lay perforated piping and gravel in the hopes that a passive DTD system might be adequate.

With passive DTD systems, it appears that the vertical PVC suction pipe (i.e., the passive stack) can be connected into the perforated piping at any convenient location. However, the connection should be remote from any suspected source of substantial air leakage into the system, since leaks near to the suction pipe will have the greatest impact on suction field extension.

Where interior drain tiles empty into a sump, the suction pipe might be installed in the sump. However, as discussed in Section 5.2, it may be preferred to locate the stack remote from the sump, both to avoid increased leakage that may occur at the sump, and to simplify subsequent sump pump maintenance.

10.2.3 Passive SMD Systems

There is no experience with passive individual-pipe/SMD systems to enable guidance on where individual suction pipe(s) should be placed. If there is gravel on the crawl-space floor, and if the membrane has been sealed everywhere (including against the perimeter foundation wall), the pipe(s) can probably be located at either perimeter or central locations, as is apparently the case with passive SSD systems.

The limited experience with sub-membrane piping/SMD systems enables no guidance regarding whether a loop of perforated piping around the perimeter would be preferred over a straight length down the interior, or over some other configuration. As discussed for active SMD systems in Section 8.2.2 (see *Sub-membrane perforated piping),* special piping configurations can be needed when the crawl space has an irregular cross section or when adjoining crawl spaces are isolated from one another.

10.3 Selection of Suction Pipe Type and Diameter

As with active systems, the above-slab piping for passive systems will be PVC, PE, or ABS. Perforated piping below the slab can be rigid perforated PVC, PE, or ABS, or can be the flexible black corrugated material commonly used for drain tiles.

The diameter of the passive suction pipe must be selected to minimize suction loss in the piping, since the naturally induced passive suctions are so low to begin with. Usually, 4-in. diameter piping has been used.

The very low suctions generate very low flows in the passive systems. Reported flows have essentially always been less than 10 cfm, and are commonly less than 1 cfm. At flows on the order of 1 cfm, suction losses in 4-in. piping would be on the order of 0.0001 in. WG per 100 ft of piping (extrapolating Figure 13). The stack will often rise straight up through the house with no horizontal runs and no elbows (or with very few); as a result, the equivalent length of piping may be only perhaps 15 to 30 ft. With this little piping and with the low friction loss per 100 ft, the total friction loss in the passive 4-in. piping network would be on the order of 1% of the passive suction induced in the stack by thermal effects alone (ignoring the contribution from wind effects).

Thus, from the standpoint of friction loss, there is generally no incentive to use piping larger than 4 in.

10.4 Selection of a Supplemental Suction Fan

Passive soil depressurization systems, by definition, should operate without a fan. However, in some passive installations which are largely able to reduce indoor levels to 4 pCi/L but which are occasionally overwhelmed (e.g., when the central furnace fan comes on and depressurizes the basement), some investigators have reported (or suggested) that a small 6- to 10-watt booster fan in the passive piping might provide sufficient marginal increases in system flows and suctions to compensate for the added challenge to the system (Ta85, Sau91b).

It must be underscored that such small fans cannot provide adequate suctions and flows to obtain the performance associated with active systems using the standard 50- to 90-watt in-line tubular fans. The 6- to 10-watt fans can not be relied upon to make a soil depressurization system function well unless the passive system is largely adequate by itself—i.e., unless only moderate reductions are needed, and unless the passive system has demonstrated an ability to provide those moderate reductions without the booster fan except under certain challenges. A typical ASD installation with a 90-watt fan will always provide greater radon reductions more reliably than will an installation with a 6- to 10-watt fan.

Whenever a passive system is installed, the mitigator or homeowner must be prepared to monitor the radon reduction performance over a wide range of conditions, to verify that the system is not consistently being overwhelmed by certain challenges. If the passive system proves to be consistently inadequate, the system should be activated by adding a standard 50- or 90-watt in-line suction fan. Since the passive stack will have been installed up through the house and through the roof, it should be relatively convenient to install an ASD fan in the section of the stack that passes through the attic.

If it is found to be necessary to add a fan to an initially passive system because the passive suction is occasionally overwhelmed, it is recommended that this fan then be operated continuously. It should not be suggested that the occupant turn the fan on only under certain conditions (e.g., certain weather conditions, or when certain exhaust fans are operating). Such instructions would require the occupant to be continually alert to the occasions when the fan should be turned on, and could result in the fan being left off. Another concern is that, once installed in the stack, the fan will serve as an obstruction to flow if it is not operated, thus potentially further reducing the performance of the passive system.

10.5 Installation of Suction Pipes

The suction pipes for passive SSD, DTD, and SMD systems would be installed in exactly the same manner as has been described previously in Sections 4.5, 5.5, and 8.5, for the corresponding active systems.

The stack must be inside the house if it is to take advantage of thermal effects. Thus, passive suction pipes will almost always be installed in heated areas. One major exception will be passive SMD systems, where the membrane penetrations will be in a crawl space which may often be unheated. However, even in this case, the stack will rise through heated living space overhead, unless a decision is made to passively vent through the band joist for convenience (Kl92), foregoing the thermal contribution to the passive suction.

10.5.1 Passive SSD Systems

For SSD systems, the need for the stack to be indoors means that passive SSD pipes would likely be installed only vertically down through the slab indoors (see Section 4.5.1 or 4.5.3), or horizontally through a foundation wall from inside the basement (Section 4.5.5). Passive SSD pipes would never be installed horizontally through the foundation wall from outdoors (Section 4.5.4), and would preferably not be installed from inside an unheated garage (Section 4.5.6), unless one were prepared to sacrifice the thermal contribution to the passive suction.

Because passive flows are so low, only a small sub-slab pit beneath the SSD suction pipe should be adequate to reduce suction loss resulting from soil gas acceleration to pipe velocity. See Section 4.5.1, *Excavating a pit beneath the slab.*

10.5.2 Passive DTD Systems

In existing houses with interior drain tiles emptying into a sump, passive DTD suction pipes may be installed into the sub-slab perforated piping at a point remote from the sump. In such cases, the passive suction pipe(s) will be installed as

US EPA ARCHIVE DOCUMENT

discussed in Section 5.5.1 for the case of interior drain tile loops.

Alternatively, the passive suction pipe could be installed in the sump, as discussed in Section 5.5.2.

In newly constructed houses, where perforated piping has been installed beneath the slab specifically for radon reduction purposes, a PVC T fitting may be installed into the perforated piping to facilitate connection of the suction pipe remote from the sump. The use of a T fitting in this manner is analogous to the approach discussed in Section 5.5.1 for connecting active suction pipes directly to interior drain tile loops in existing houses [see *Interior tile loops - connecting the remote suction pipe (direct approach)]*.

In new houses, the T fitting would be installed into the perforated piping at the point at which the passive stack is to rise up through the house, before the slab is poured. Because the perforated piping would be completely exposed during construction, this step would be much easier than described for the retrofit case in Section 5.5.1, where the T had to be installed through a hole in the slab. A vertical stub of PVC piping would be cemented into the upward-pointing leg of the T, long enough to extend above the top of the slab. The perforated piping and the T would be embedded in the gravel bed which would normally be present; and, especially if the system were intended from the outset to operate as a passive system, polyethylene sheeting would be laid on top of the gravel, to reduce air leakage into the low-flow system. The slab would then be poured, with the vertical pipe stub protruding up through the new concrete. The suction pipe would then be cemented onto the end of the protruding pipe stub using a straight coupling. The weight of the vertical suction pipe would be borne by the T beneath the slab.

10.5.3 Passive SMD Systems

There are only limited data on passive SMD systems. However, the limited results (along with intuition) suggest that the sub-membrane piping/SMD approach is probably the appropriate approach for passive systems, due to the low suctions and flows developed by these systems, and due to the relatively poor communication that might be assumed beneath the membrane. The individual-pipe/SMD approach might best be considered only perhaps when there is gravel on the crawl-space floor to ensure good sub-membrane communication.

Perforated piping would be installed beneath the membrane, and the vertical suction pipe mounted in this piping, as discussed in Section 8.5.2 for active systems (see *Sub-membrane piping/SMD approach)*. The membrane would be completely sealed over the crawl-space floor, as described in Section 8.5.1.

If there is gravel on the crawl-space floor, and if the individual-pipe/SMD approach is being considered, the individual suction pipes would be installed as discussed in Section 8.5.2 (see *Individual-pipe/SMD approach),* and the membrane completely sealed.

10.6 Design/Installation of Piping Network

Some of the guidance in Section 4.6 regarding the design and installation of the piping network and the fan for active soil depressurization systems also applies to passive systems. However, some of the guidance in Section 4.6 has to be modified for passive systems, for several reasons: a) the passive systems have no fan; b) the passive stack will usually need to be installed to take advantage of the phenomena that induce natural suction; and c) passive flows are usually very low.

Need for stack to rise through heated space. Most importantly, the passive stack *must* rise up inside the house if the system is to take advantage of the thermal stack effect. Higher temperatures in the heated living space, relative to the outdoors, create this natural driving force, which will depend upon the height of the stack (i.e., the number of stories in the house) and the temperature difference between indoors and outdoors.

Thus, the passive exhaust piping will essentially always be designed in general accordance with the interior stack configuration illustrated in Figure 20, except that no fan would be included. The exterior and garage stack configurations considered for active systems in Figure 21, where the exhaust piping penetrates the band joist, and where the stack rises above the eave outside the house or in an unheated garage, are generally not options for passive systems.

As a result, the details regarding the design and installation of the passive piping network would generally be those in Sections 4.6.2, 4.6.3, and 4.6.4 which are applicable to the interior stack case. The details in Section 4.6.5 for active exterior and garage stacks would generally not apply.

There must be a stack if the system is to take advantage of thermal effects. Passive venting at grade level, with the passive exhaust pipe simply terminating outside the band joist, would lose most of the thermal stack effect and the roofline wind effects creating depressurization; only grade-level wind effects would remain. Thus, the passive depressurization mechanism for system operation, which is already relatively weak, would be further weakened, and the pressure break mechanism would be the major remaining operative mechanism. See Section 2.5 for further discussion of the mechanisms.

Some success has been reported achieving moderate radon reductions with passive SMD systems venting at grade level, as discussed earlier (K192). However, in the discussion here, it will be assumed that there will be a passive stack that extends up through the house.

Horizontal runs in the passive stack. Ideally, the passive stack would rise straight up through the house with no elbows or horizontal runs, to reduce the equivalent length of piping and to thus reduce friction losses. Since passive suctions are so low, it would seem desirable to minimize losses.

US EPA ARCHIVE DOCUMENT

US EPA ARCHIVE DOCUMENT

However, passive flows will always be low. Flows are often on the order of 1 cfm, and are rarely as great as 10 cfm. As discussed in Section 10.3, at 1 cfm, the friction losses will be very low, on the order of 0.0001 in. WG per 100 ft of piping. This will commonly be very low relative to the naturally induced suctions, except during warm weather with no wind.

Because friction losses should be low, it is not mandatory that the passive stack rise straight up through the house from the point where it penetrates the slab. Within reason, elbows and horizontal runs in heated space should be tolerable if necessary. However, it would seem generally advisable to minimize such elbows and horizontal runs, and eliminate them if possible.

It should be noted that the thermal stack effect creating the passive driving force depends on the net height of the stack and the temperature differential between indoors and outdoors. Adding horizontal runs inside heated space will not decrease this driving force; it will only increase the friction losses due to the added length of piping. In fact, to the extent to which the horizontal run provides additional residence time in the stack which helps the stack gases come up to house temperature, the horizontal run could even be beneficial.

Where horizontal runs are required in the passive piping, they should be made in heated space, such as a heated basement, rather than unheated space. This will contribute to bringing the soil gas inside the pipe up to house temperature, and thus aid the system in achieving the theoretical maximum thermal driving force for the given conditions of stack height and indoor/outdoor temperature differential.

A horizontal run in, e.g., an *un*heated basement would not be *detrimental* to the system, assuming that the basement is at a temperature higher than that of the soil under the house. In an unheated basement, the soil gas inside the piping would still experience some temperature rise, just not as much as if the basement were heated.

Horizontal runs in unheated attics would create some limited reduction in the thermal stack effect. That run would help bring the soil gas down to attic temperature, causing the limited column height in the attic to be at a lower temperature during cold weather. On the other hand, during the summer, when the attic would likely be warmer than the living space below, this horizontal run in the attic would boost the stack effect.

Need for pipe insulation in unheated attics. Where the passive stack passes through an attic, which in cold weather will be colder than the living space below, the segment of the stack in the attic might be insulated, to maintain the temperature of the gases inside the pipe. Maintaining stack gas temperature near house temperature during cold weather would help increase the thermal stack effect, and will help avoid moisture freezing in the pipe.

One rationale for insulating the attic portion of the stack is the same as that discussed previously for avoiding horizontal runs in the attic. If the temperature of the gases inside the attic piping can be maintained near living-space temperature, the several feet of stack in the attic will add to the total stack height that is determining the driving force created by the thermal stack effect. If, on the other hand, the soil gas inside the attic segment of the stack drops essentially to outdoor temperature, the stack segment in the attic will add nothing to the driving force. But again, in the summer, the argument would be reversed, because the hot attic would then tend to boost the driving force if the stack were not insulated.

Passive stacks should always be insulated in the attic in cold climates to reduce the risk that condensed moisture will freeze inside the stack, blocking the stack. Although the soil gas inside the pipe will be warmer with passive systems than in active systems at the point where the stack penetrates into the attic (since it may have risen to indoor temperature during its residence time in the living-space piping), the gas in passive systems will have a dramatically lower flow rate. Thus, there is an increased chance that the gas will have dropped below freezing at the stack exit, and there will be much less momentum in the gas stream to prevent ice deposition.

Need for cap at discharge point. As indicated in Section 4.6.4 (see *Caps on the exhaust stack),* a cap is generally not needed on the exhaust stacks from active systems. Any precipitation that enters the stack will be modest relative to the condensed soil moisture that will be draining through the piping anyway. And the velocity of the exhaust will reduce the risk of leaves or other light debris from entering the stack.

Passive stacks should also be able to handle any precipitation that enters. However, because their exhaust velocity will be much lower than that from active stacks (on the order of 10 ft/min rather than perhaps 1,000 ft/min), the exhaust will be less able to deflect light debris. If sufficient debris entered the stack, it could create a serious obstruction in a system that may have only a marginal flow to begin with. Accordingly, a cap may be more important for a passive system.

A cap such as the one shown in Figure 26B, or such as one of the others discussed in Section 4.6.4, could be options. A hardware cloth screen (1/4-in. mesh), as discussed in that section, could be a logical choice (KI92). Alternatively, for passive systems, caps can be considered which may modestly increase the passive suction, such as draft inducers (CI91). Since flows are so low, it is unlikely that any reasonable cap design would create an undue pressure drop unless it became plugged with ice during cold weather.

Provision for possible later addition of fan. Passive stacks, by definition, are installed without the fans discussed in Sections 4.4, 4.6.4, and 4.6.5. However, as discussed in Section 10.4, it may be necessary to add a fan at a later time, if the passive suction proves inadequate.

Thus, to the extent possible, the segment of passive stack through the attic should be installed in a manner to simplify subsequent addition of a fan. The stack should be located at a point in the attic where there is sufficient headroom and working space to permit subsequent fan installation and maintenance, and where the necessary electrical connections can conveniently be made. For there to be sufficient space for the fan itself, the stack would have to be at least 12 in. away from

existing walls, wooden members, or utility lines in the attic, and there would have to be at least 24 in. of vertical clearance in the stack. Other considerations in stack and fan location are indicated in Section 4.6.2 (see *Routing considerations with attic piping runs).*

Other guidance regarding piping installation. Much of the other guidance given in Sections 4.6.2 and 4.6.3 concerning the design and installation of the piping network for active systems will also apply to passive soil depressurization systems.

For example, any horizontal piping runs should be sloped downward toward the suction pipe in passive systems, to allow condensed moisture to drain, and low points in the piping should be avoided or drained. The piping must be adequately supported, by hangars along horizontal runs, and where vertical piping penetrates a ceiling into the story above. Padding might still be inserted between the piping and any wooden members in passive systems, as is done to reduce vibration noise in active systems; even though a fan is not being installed at the outset, one might be installed later.

Insulation of interior piping to reduce sweating during hot, humid weather will not be needed in passive systems, since the low gas flows inside the passive pipe will probably approach house temperature fairly quickly. Also, this insulation is not needed to help reduce system noise, since there is no fan. But this insulation might be considered subsequently, if a fan is added at a later time.

Use of heated flues as passive stack. The prior discussion has all focused on the most common case, where the passive stack consists of PVC piping that has been installed up through the house. In a couple cases, investigators have reported using an existing furnace flue as the passive stack (Gi90).

Use of a furnace flue offers two potential advantages. First, it avoids the time and cost involved in installing a separate stack up through the house; it uses a pre-existing stack. Second, when the furnace is operating, the hot flue gases significantly increase the draft up the stack and the passive suction. Where the furnace flue has been used, four-fold and greater increases in flow rate (to as high as 30 cfm) and five- to ten-fold increases in suction (to as high as 0.1 in. WG) have been reported in passive suction pipes when the furnace was operating, compared to when it was not operating (Gi90).

Because of the high temperature of the flue, the PVC piping in the radon mitigation system was connected to the flue using a custom designed length of sheet metal ducting, so that the PVC piping would not exceed its safe operating temperature.

Furnace flues should not be utilized as passive stacks without the involvement of a qualified specialist in heating and air conditioning systems. The mitigator would have to ensure that the passive installation would not endanger the occupants, violate codes, or impact furnace performance or warranties. Extreme care would be required to ensure that the passive system did not result in improper drafting of the furnace.

10.7 Sealing in Conjunction with Passive Soil Depressurization Systems

Because passive systems can draw only very low flows, any leakage of house or crawl-space air into the systems could significantly decrease the performance of what would likely be only a marginal system even without the leakage. With flows usually on the order of 1 cfm in the passive piping, and with suctions typically only a few hundredths of an in. WG or less, air leakage through slab and membrane openings would further reduce what is already a weak sub-slab or sub-membrane suction and flow field.

Accordingly, the slab sealing steps described in Section 4.7 for active systems become all the more important with passive SSD and DTD systems. Likewise, the membrane sealing steps described in Section 8.7 for active SMD systems become all the more important with passive SMD systems.

10.8 Gauges/Alarms and Labelling

The very low suctions in passive systems (from below 0.01 in. WG to a maximum of 0.1 in. WG) are at or below the low end of the range that can be reliably measured with the manometers and pressure gauges discussed in Section 4.8.1. More sensitive devices would be required, such as the digital micromanometer used for sub-slab suction field measurements. These micromanometers can cost $500 and more, a large fraction of the total cost for the system.

Moreover, the suctions in these systems are likely to be highly variable, varying as temperatures and winds change, and as appliances are operated in the house. Therefore, even if a sufficiently sensitive gauge were mounted on the passive stack, it might be expected to read below the desired range (and set off any alarm) for some part of the time.

As a result, it does not appear that a pressure gauge is a viable approach for passive systems. The only option would appear to be sufficiently frequent radon measurements in the house during the year following installation, to confirm that the system is not being overwhelmed by certain weather conditions or the operation of certain appliances (such as the forced-air furnace or a whole-house fan). This approach does not provide the assurance that is available with active systems, where gauges can give a reliable continuing indication of performance.

The passive systems should be labelled just as active systems are (Section 4.8.2). Since there is no electrically powered fan with passive systems, the electric fuse box or circuit breaker panel would not necessarily be the most obvious location for the centrally located label mentioned in Section 4.8.2. Also, there would be no electric switch that would have to be labelled, controlling power to the fan.

US EPA ARCHIVE DOCUMENT

US EPA ARCHIVE DOCUMENT

Section 11
Post-Mitigation Diagnostic Test Procedures for Soil Depressurization Systems

11.1 General

11.1.1 Purposes of Post-Mitigation Diagnostics

The purposes of diagnostic testing following the installation of a soil depressurization system are to:

a) confirm that the system is operating properly; and

b) assess what corrective action is required, if the system is not operating as desired.

Testing to confirm that the system is operating properly will always be conducted. Testing to determine necessary corrective action will usually be necessary only occasionally in most areas of the country.

11.1.2 Diagnostic Tests that Can Be Considered

To confirm that the soil depressurization system is operating properly, mitigators will always: a) visually inspect the installation; b) measure suctions in the system piping; and c) conduct (or arrange for) short-term indoor radon measurements, and recommend independent long-term measurements to the homeowner. Some mitigators also conduct (or arrange for) long-term measurements directly. EPA's interim mitigation standards also require testing for backdrafting of combustion appliances (EPA91b).

Other post-mitigation diagnostics would usually be conducted only if the testing above indicated that the system were not operating properly. The most common additional testing when the system is not operating as desired is measurement of sub-slab suction field extension with the soil depressurization system operating.

A more complete summary of the diagnostics that can be considered, and the cases under which they might be useful, is given below.

- ***Visual inspection.*** A visual inspection of the completed system, to confirm that all details have been completed properly, should be a routine quality assurance step that would be completed for all installations.

- ***Suction (and possibly flow) in system piping.*** A suction measurement in the system piping is a simple yet crucial measurement that should always be made to verify that the system is operating in the anticipated range. This measurement can provide an immediate indication of whether certain problems have occurred during system installation, whether there is a defect in the fan, or whether certain complications (such as unacceptably high air leakage through slab openings) might exist. This measurement can easily be made at the same time that a pressure gauge is being mounted on the system piping, and can be necessary to permit proper marking of the acceptable system operating range on the gauge to permit interpretation by the occupant.

  If the suction measurement is being made using a micromanometer, this suction measurement can easily be supplemented with a system flow measurement, using a pitot tube which comes as an attachment to the micromanometer. Flow data can be an important supplement to the suction results, for assessing system performance.

- ***Indoor radon measurements.*** An indoor radon measurement is the primary confirmation that the system is accomplishing its objective. Radon measurements are necessary to demonstrate that the owner's/occupant's radon exposure has been reduced as anticipated, and that any warranty (that the system will reduce radon concentrations below a given level) is being met. Thus, both the occupant and the mitigator have a stake in ensuring that the measurement is completed properly.

  EPA's interim mitigation standards (EPA91b) specify that the mitigator must complete a short-term radon measurement within 30 days after the installation is completed, or must ensure that such a measurement is completed independently by the homeowner or by an independent firm. The mitigator should also recommend that the client conduct independent short- or long-term measurements at least once every two years.

  In view of the improved measure of exposure provided by a long-term measurement, the mitigator may wish to encourage a long-term measurement by providing the occupant with alpha-track detectors for this purpose.

- ***Combustion appliance backdrafting.*** EPA's interim mitigation standards require that tests be conducted fol-

lowing installation of an ASD system, to determine whether the mitigation system may be contributing to backdrafting of combustion appliances. Backdrafting of clean-burning appliances such as furnaces and water heaters may not be apparent to the occupant, and could have serious health consequences. If it is found that the system is responsible for causing backdrafting, the mitigator is responsible for seeing that the problem is corrected.

ASD systems are most likely to contribute to backdrafting in cases where the system has high flows, or where the basement or house are particularly tight (i.e., have a low leakage area and natural infiltration rate).

If post-mitigation measurements suggest that backdrafting is occurring, the measurements should be repeated with the mitigation system off, to confirm that it is indeed the mitigation system causing the problem. Where backdrafting is found, the problem will often have existed prior to mitigation. Mitigators might consider backdrafting tests prior to mitigation to reveal any pre-existing problems, to avoid having to deal with this issue after mitigation.

- ***Suction field extension*** (with the mitigation system operating). In cases where the ASD system is not performing as well as expected, the most commonly utilized diagnostic test is a suction field extension measurement beneath the slab, inside the block wall, or beneath the crawl-space membrane, with the mitigation system operating. This test will identify any areas of the slab, the wall, or the membrane which are not being adequately depressurized by the system, and will thus guide the installation of additional suction pipes.

  In some cases, use of a chemical smoke stick to visualize flow down into (or up out of) existing unsealed slab cracks can be used to provide a rapid, qualitative indicator of suction field distribution. However, the most definitive test would involve quantitative sub-slab suction measurements with a micromanometer at drilled test holes.

- ***Radon grab sampling and "sniffing"*** (with the system operating). In certain cases where the system is not performing adequately, radon grab sampling or "sniffing" near or in potential entry routes might be conducted as a supplement to suction field extension testing. Grab sampling could identify those routes which still exhibit high levels, and hence which may still not be adequately treated. Such results could aid in selecting the locations of additional suction pipes.

  This diagnostic may prove to be useful in certain cases where suction field testing alone might not be expected to indicate where additional suction pipes (or perhaps additional sealing steps) may be needed. In particular, where a SSD, DTD, or SMD system has been installed in houses having block foundation walls, suction field extension measurements beneath the slab or membrane may not reveal that a particular wall still requires treatment. Even suction measurements inside the block walls might not reveal this, since suction fields beneath slabs or membranes often will not create measurable suction fields throughout a wall. However, radon grab sampling could show that one or more of the walls still contained distinctly elevated radon levels, indicating that the mitigation system was not intercepting the radon before it entered the walls.

  In this case, more SSD or SMD suction pipes near the elevated walls, or the addition of a BWD component to the system, could be required. Or, perhaps particular openings in the block wall could be shown by the grab samples to be the primary remaining entry routes into the house, so that sealing of those wall-related entry routes might adequately improve performance.

- ***Smoke flow visualization tests to check for system leaks.*** In addition to their potential utility in qualitative measurement of suction field extension to various openings in the slab, membrane, or wall, discussed above, smoke sticks could also be used to check for leaks in the low-pressure and high-pressure portions of the system piping.

  Smoke flow into pipe seams on the suction side of the fan could reveal, e.g., if certain fittings were not adequately sealed, or if the suction pipes were not adequately sealed where they penetrated the slab, possibly explaining the cause of high flows and low suctions in the system. On the pressure side of the fan, smoke flows away from seams in exterior stacks fabricated of rain gutter downspouting would reveal where exhaust gases are being released immediately beside the house, possibly contributing to exhaust re-entrainment.

- ***Tests to check for re-entrainment.*** In cases where radon levels have not been reduced as expected and where other diagnostic tests fail to reveal the reason for the inadequate performance, the mitigator must consider the possibility that radon is entering the house by some mechanism other than soil gas flow through the foundation. One other mechanism could by re-entrainment of the ASD exhaust gas.

  Where inspection suggests that re-entrainment might be a possible explanation, a variety of diagnostic tests could be considered. These could include chemical smoke visualization tests, to check for leaks in an exterior stack beside the house, or temporary modification of the exhaust configuration in a manner that should significantly reduce re-entrainment. Tracer gas tests could also be considered, probably using a HCFC or HFC refrigerant as the tracer (see the discussion in Section 3.5.6). It is likely that most mitigators would rarely, if ever, find it necessary to perform tracer gas testing.

- ***Well water radon analysis.*** In addition to exhaust re-entrainment, another mechanism by which radon might be entering the house (other than via soil gas flow through the foundation) would be as a component in the well water.

  If suction field extension measurements and radon grab sampling fail to suggest why ASD performance is inad-

US EPA ARCHIVE DOCUMENT

equate, a well water radon analysis might be conducted following installation of the ASD system. This analysis would enable determination of whether radon released into the air from the well water might be responsible for some significant fraction of the residual airborne concentrations. This diagnostic would be considered in houses is served by a well which was not tested for radon prior to mitigation (see Section 3.5.2), in areas where elevated well water radon levels have sometimes been observed in the past.

- ***Flux or gamma measurements.*** If suction field extension and grab radon measurements fail to suggest why ASD performance is inadequate; if the house is in an area where building materials have sometimes been found to be a significant contributor to indoor airborne radon levels; and if flux or gamma measurements were not made prior to mitigation to assess the possible importance of building materials as a source (see Section 3.5.3): then measurements might be conducted following installation of the ASD system, to determine if the residual radon might in part be resulting from building materials.

The following subsections address specific procedures for conducting these diagnostics, along with discussion of how the results of the diagnostic testing can be used to improve ASD performance where necessary.

11.2 Procedures for the Visual Inspection

A visual inspection of the ASD during and immediately following installation should be a routine quality assurance step for any mitigator. Any oversights during the installation process can be discovered at this time, and corrected prior to their becoming apparent through elevated post-mitigation radon concentrations. Some of the problems that might be uncovered through the visual inspection might not have noticeably impacted the post-mitigation radon measurement, but could still have had a long-term impact in the form of reduced system performance and reduced system durability.

The checklist of items to be reviewed during the inspection will depend upon the particular ASD variation that has been installed. Some of the key items to check include:

- Has the suction pipes been properly mounted into the slab, the sump, the block walls, and/or the membrane in accordance with the system design, and have the penetrations been properly sealed?

- Has the system piping been properly supported by hangars and strapping? Are all pipe fittings tightly cemented (including those associated with the exhaust stack), and have the fan couplings been tightly clamped?

- Is the piping properly sloped, and have low points been avoided (or fitted with a drain), to prevent accumulation of condensed moisture which could block air flow?

- Has the fan been mounted and wired properly? Is it running quietly? If it is not operating quietly, what steps need to be taken to reduce noise?

- Is the installation neat, and does it reflect good workmanship? Has the work area been cleaned and restored adequately?

- Has a fire break been installed in cases where the piping penetrates a fire wall into an adjoining garage?

- Does the fan exhaust discharge in a manner which will reduce re-entrainment?

- In crawl-space SMD systems, has the membrane been installed and sealed properly?

- Have the slab, wall, and membrane openings which were identified for sealing, in fact been sealed properly at all locations?

- Has an appropriate gauge and/or alarm been installed on the system piping? Has the gauge been properly marked to advise the occupant of the proper system operating range?

For some of the steps in this inspection—e.g., for assessing the tightness of the pipe fittings, or the effectiveness of slab seals—a chemical smoke stick might be used, as discussed in Section 11.7, to assess whether air is being drawn into the pipe joint or down into the apparently sealed slab opening when the ASD system is operating.

11.3 Procedures for Suction (and Flow) Measurements in the System Piping

A quantitative measurement of the suction in the system piping is always necessary, in order to confirm that the system is indeed operating in the anticipated, typical range. Usually, this measurement will be made at the point where the gauge or alarm is to be mounted in the piping, and will be performed at the time that the gauge or alarm is being installed. The results from this measurement will help the mitigator mark the system operating range on the gauge, and set the trigger value for the alarm.

Operation at unexpectedly low suctions and high flows. If the system is operating at unexpectedly low suctions and unexpectedly high flows, this could be suggesting that there are leaks in the system piping. Or, it could be indicating larger than expected amounts of air short-circuiting into the system through leaks through openings in the slab or membrane. Thus, further smoke-stick or other diagnostics may be warranted to identify the source of these leaks, and further sealing steps could be warranted.

What constitutes "unexpectedly low suction" will vary, depending upon the characteristics of the house and soil, the ASD variation, the performance curve of the fan being used, and the distance of the measurement point from the fan (i.e.,

US EPA ARCHIVE DOCUMENT

the amount of friction loss in the piping between the fan and the measurement location). It is recommended that these piping suction measurements be made (and that any pressure gauge be located) reasonably near to the point at which the suction pipe penetrates the slab, wall, or membrane, to provide the best measure of the suction actually being applied to the soil. Making the measurement too close to the fan may sometimes give misleadingly high suction readings.

In typical SSD and DTD systems with the 50- to 90-watt in-line tubular fans, suctions lower than roughly 0.25 to 0.5 in. WG near the slab penetration would usually be "low" in essentially any house. With 90-watt fans, and/or with tight soils or reduced sub-slab communication, the suction might generally be considered "low" if it fell below the upper end of that range. With 50-watt fans, and/or with highly permeable native soils where flows can be expected to be high, the suction might not be considered "low" until it fell toward the lower end of that range.

Of course, the actual value at which suctions start being considered "unexpectedly low" in a given case will depend upon the particular house and geographical area. For example, pre-mitigation diagnostics or prior experience in an area might suggest that low flows should be expected in a particular house, and that a 90-watt fan would typically be expected to generate over 1 in. WG in that house. Under those conditions, a suction below 1 in. WG might be considered "low" for that fan in that house, and thus prompt further analysis.

With the in-line radial blowers discussed in Section 4.4.2, "low" suction near the slab penetration in SSD and DTD systems might be expected to be at the upper end of the 0.25 to 0.5 in. WG range cited above for the tubular fans. With the high-suction/low-flow fans discussed in Section 4.4.3, "low" suction could be more than 1 in. WG.

There is less experience with SMD systems. However, since the flows are generally comparable to those in SSD systems (see Section 8.3), the range would be expected to be about the same as that for SSD systems. That is, with the 90-watt fans, suctions much below roughly 0.25 to 0.5 in. WG near the membrane penetration might be considered "low." Again, the actual value at which suction would start being considered "low" would depend on a variety of house, geological, and system characteristics, as mentioned earlier.

With the high flows in BWD systems, suctions in BWD piping near the wall penetration can be below 0.1 in. WG with the 90-watt fans. As a result, quantification of "low" suctions for BWD systems is not possible.

Operation at unexpectedly high suctions and low flows. The preceding paragraphs address the case where the system is operating at unexpectedly low suctions and unexpectedly high flow. If, on the other hand, the system is operating at unexpectedly high suction and unexpectedly low flow, this could be suggesting that the piping is blocked in some manner. Perhaps a SSD pipe was installed directly over a perimeter footing, if the pipe is located near the perimeter. Or perhaps the pipe has dropped down to the bottom of the sub-slab pit and is embedded in the soil there.

In houses with marginal or poor sub-slab communication, high suctions and low flows will be common. Thus, for a suction to be *unexpectedly* high, it will have to be near the maximum suction capability of the fan under communication conditions which would lead one to expect that the fan should *not* be near maximum suction.

Since high suctions will always be suction near the fan's maximum capability, it could be necessary to make a flow measurement to supplement the suction measurement, to better distinguish whether the high suctions and low flows are outside of what would be an expected range. Unless the house has poor sub-slab communication, flows below roughly 5 to 10 cfm in a SSD pipe with a 90-watt fan could be suggesting some blockage. However, even this is not a rigorous indicator of blockage. Flows below 5 cfm have occasionally been seen in SSD systems with fair communication, with no pipe blockage, due to a combination of tight slab and tight soil which reduces air leakage into the system.

Operation at low suctions and low flows. In some cases, low suctions and low flows might be found simultaneously in a particular installation. This result could be indicating that there is a defect in the fan, in the switch or speed controller in the fan wiring, or in the wiring itself. It could also be suggesting that there is a leak in the system piping at some point between the measurement location and the fan.

This type of result underscores the value of making flow measurements as well as suction measurements during these diagnostics. It should not be automatically assumed that, just because suctions are low, flows must be high.

Measurement procedures. Where a pressure gauge is being installed on the system, the piping suction measurement will commonly be made using that manometer or gauge. See Section 4.8.1, *Pressure gauges.* The gauge is leveled and/or zero adjusted, and flexible tubing from the appropriate terminal of the device is inserted through a small hole drilled in the side of the piping for this purpose. The gap between the tubing and the hole through the piping is made air-tight with a rubber seal around the tubing. The suction in the piping is then read directly from the gauge.

Where a pressure-activated alarm is being mounted on the piping, this alarm does not provide a quantitative measurement of suction. Hence, this measurement will have to be made with a separate device. If a micromanometer has been obtained for sub-slab suction measurements, this device (set on the 0 to 2 in. WG scale) can conveniently be used to make this measurement. Again, tubing from the micromanometer would be inserted through the small hole in the side of the pipe, with the residual gap sealed by a rubber grommet.

Where a micromanometer is available, the flows in the piping can also be conveniently measured, using a pitot tube attachment that can be obtained with the micromanometer. The flow results can provide important additional perspective regarding how the system is operating, and are generally recommended.

US EPA ARCHIVE DOCUMENT

11.4 Procedures for Indoor Radon Measurements

11.4.1 Initial Short-Term Radon Measurement

Because the residual indoor radon concentration is the primary measure of the success of the system, EPA's interim mitigation standards (EPA91b) require that a short-term radon measurement be initiated no sooner than 24 hours after the installation of the system, and be completed within 30 days after installation. This measurement is intended to provide a rapid indication of whether the mitigation system appears to be operating properly.

According to the standards, the mitigator must either complete this short-term measurement directly, or must ensure that the homeowner or a separate measurement firm completes the measurement independently. If the required measurement is made independently, the results must be provided to the mitigator for the mitigator's records. Even if the mitigator conducts the measurement directly, he/she should recommend that the homeowner have a measurement made independently.

The short-term measurement can be conducted using any appropriate measurement device specified in EPA's radon/radon decay product measurement protocols, and must be completed in accordance with these protocols (EPA92d, EPA93). These protocols require, among other things, that: a) house be closed during the measurement and for a period of at least 12 hours prior; and b) that the measurement be made on the lowest lived-in level of the house.

To be conservative, a mitigator might choose to make the measurement in the lowest *livable* level (e.g., an unoccupied basement), if this level is below the lowest lived-in level. Radon concentrations commonly tend to be highest on the lowest level of the house.

Different mitigators employ different approaches in completing this measurement. Many mitigators leave a charcoal detector with the occupant, which the occupant is to deploy at the appropriate time and then return to an independent laboratory for analysis after a 2- to 7-day exposure period. At least one mitigator leaves an electret ion chamber with the occupant, which the occupant is to deploy at the designated time and then ship back to the mitigator for reading after 2 to 7 days' exposure.

More reliable deployment and retrieval of the measurement devices would result if the mitigator handled these steps directly. However, this would necessitate two additional visits to the house (one each for deployment and for retrieval), which could be time-consuming if the house were located far from the mitigator's offices.

At least one mitigator reports completing the short-term measurement using a continuous monitor. The continuous monitor is deployed immediately after installation, and is retrieved and read after measurement period of 48 hours or longer. In interpreting the results, the first 24 hours of readings are disregarded, since the measurement period is not supposed to begin until 24 hours after system activation.

Alternatively, the mitigator could arrange to have the measurement completed by an independent measurement firm. While more expensive, this approach would ensure the homeowner that the measurement is independent of the mitigator.

11.4.2 Subsequent Radon Measurements

Following the initial short-term measurement, any subsequent short- or long-term measurements of the indoor radon levels are the responsibility of the homeowner or occupant. According to EPA's draft mitigation standards, the mitigator should recommend that the homeowner make a radon measurement at least once every 2 years.

Because a long-term measurement will provide a better measure of the occupant's radon exposure, the mitigator might wish to encourage a long-term measurement by providing the occupant with alpha-track detectors for this purpose. These detectors could be deployed for 3 to 12 months. Locations for the detectors would be selected with emphasis on the parts of the house where the occupants spend most time.

11.5 Procedures for Checking Combustion Appliance Backdrafting

EPA's interim radon mitigation standards require that a test be made following installation of an ASD system, to determine whether combustion appliances are backdrafting. Backdrafting would occur if the house were being depressurized to the extent that suction in the house overcame the thermal effects that draw the products of combustion up the flues, causing the combustion products (including some hazardous carbon monoxide) to flow into the house instead of up the flue.

Backdrafting will probably not commonly be caused by ASD systems with typical exhaust flows. Most often when backdrafting is encountered, the backdrafting problem will have existed prior to the installation of the mitigation system. However, once the system is installed, the system can worsen the pre-existing problem, and the mitigator will have to address this issue in some manner. Thus, some mitigators may wish to include backdrafting measurements in the pre-mitigation diagnostics, so that the problem can be identified and discussed with the homeowner beforehand.

Combustion appliance backdrafting would be most likely to be created by the ASD system in the following cases where:

- the depressurization system flows are particularly high, suggesting that significant amounts of air are being drawn out of the areas (such as the basement or furnace room) where combustion appliances are located. BWD systems, which can have flows as high as 200 cfm, much of which has likely come from inside the house, thus offer a greater risk than would, for example, a SSD system exhausting 50 cfm.

US EPA ARCHIVE DOCUMENT

- the basement or furnace room is particularly tight, so that even a limited amount of exhausted air can create some depressurization in the areas where the appliances are located. In some cases, such tight structures may have had only marginal draft to begin with, and a slight additional basement depressurization contributed by the ASD system might be sufficient to create backdrafting.

The risk of backdrafting in a given house can be increased by a variety of other factors associated with the design, construction, and operation of the house and flue system (Ang92, Fit92, Ne92). These other factors can reduce the draft in the flue prior to mitigation, making the system more subject to backdrafting due to the incremental effects of the ASD system. In addition to the tightness of the basement or furnace room, these other factors include: improper connection of the flue to the combustion appliance; other problems in flue design or installation; partial blockage of the flue by debris; and other exhaust appliances in the house (in addition to ASD) that can contribute to house depressurization. The risk of backdrafting will also be greater when the flue temperature is low, a condition that will exist when an appliance cycles on after having been off for an extended period.

Backdrafting would not be a concern in cases where traditional natural-draft combustion appliances are not present. Such cases would include, e.g., houses having all-electric space and water heating systems, or houses having advanced high-efficiency, closed-combustion furnaces, water heaters, and fireplaces. Also, the risk of backdrafting would be greatly reduced with induced-draft appliances, which may have suctions of 0.06 in. WG or greater in the flue.

It is re-emphasized that if the following backdrafting tests are initially conducted with the ASD system operating, and if the tests suggest a risk of backdrafting, the mitigator should repeat the tests with the ASD system off, to assess the degree to which the ASD system is responsible for (or is contributing to) the problem.

11.5.1 Backdrafting Test Procedures for Mitigators

A variety of procedures have been identified to test for combustion appliance backdrafting (CMHC88, NFGC88, ASHRAE89, TEC92). Many of these procedures can be conducted using equipment that many mitigators will have available (chemical smoke and a micromanometer).

Establishing "worst-case" conditions. All of the procedures involve initial steps to place the house under the conditions which have the greatest likelihood of creating backdrafting, to provide a worst-case scenario. These steps generally include:

- Closing all windows and doors to the outdoors, to prevent draft air from being drawn in through open windows and doors.

- Closing interior doors. If the combustion appliance is in a basement or furnace room, closing interior doors will prevent the appliance from drawing draft air from elsewhere in the house. This is important since a basement or furnace room will commonly be tighter than other parts of the house.

- Turning on all exhaust fans, including, e.g., kitchen and bathroom exhaust fans, the clothes drier, any attic fan, and any whole-house exhaust fan. Sometimes the central furnace fan in forced-air systems is operated as well. Where the objective is to assess the effect of the ASD system, the ASD fan would also be operating. It is noted that operation of a whole-house exhaust fan with the windows closed in contrary to the manner in which such fans are normally operated; hence, the house might be depressurized to an atypically great extent, and the backdrafting test thus might have an increased tendency to give a false positive result.

- In some cases, turning off the combustion appliances for awhile, to allow the flue to cool, thus further reducing the initial draft when the appliance is turned back on.

Worst-case conditions are established for these tests because it is recognized that the conditions potentially causing backdrafting will be varying over time. Due to the potentially lethal threat posed by carbon monoxide backdrafting into the house, it is considered wise to take the most conservative approach, which is to utilize the most challenging set of conditions.

Having established these worst-case conditions, the types of measurements that are then performed depend upon the specific test procedure.

Simple smoke visualization test. One of the simplest tests (NFGC88) involves smoke visualization testing at the draft hood in the appliance flue with the combustion appliance operating and the flue hot, and with all of the exhaust fans operating. (Draft hoods are also referred to as down draft diverters.) If the smoke flow is distinctly up into the hood and up the flue, a positive draft under these worst-case conditions is qualitatively demonstrated, and backdrafting would not seem to be a problem.

Although this test is specifically designed for gas-fired appliances having draft hoods (draft diverters), a similar smoke visualization test could be envisioned at the barometric damper of oil-fired units, or near the combustion zones of fireplaces, wood stoves, kerosene heaters, etc. Consistent with the guidance given in Sections 3.2 and 3.3.1, this document recommends that heatless chemical smoke be used, to avoid the thermal effects and fire hazard potentially associated with the use of a match, cigarette, or punk stick as the smoke source.

Given the ease with which this test can be conducted, mitigators may often find it convenient to begin backdraft testing using this approach. More extensive procedures, such as those discussed below, might then be considered if the results from this initial testing suggested that they are warranted.

US EPA ARCHIVE DOCUMENT

More comprehensive procedures—house depressurization test. Two of the other procedures (CMHC88, TEC92) include more extensive testing, although still for the most part utilizing equipment that many mitigators will have available.

One of these procedures (CMHC88) begins with a paper screening analysis to help assess whether the testing described below is necessary.

The initial testing with these comprehensive procedures involves measurement of the pressure differential across the house shell, between the outdoors and the area where the combustion equipment if located. Such pressure differential measurements would be made as discussed in Section 3.5.4 (see *Procedure for pressure differential measurements across the house shell),* with care to avoid interference from wind effects. In one of these procedures (TEC92), these pressure measurements are to be made under three sets of conditions, to ensure that worst-case conditions are defined: all exhaust fans operating, central forced-air air handler off; all exhaust fans plus the air handler on; and exhaust fans off, only air handler on. See the citations for further details.

According to these two procedures, the threat of backdrafting is assessed based upon the house depressurizations observed under the worst-case conditions. For example, 0.012 in. WG depressurization of the house relative to outdoors is identified as the point at which one might become concerned about backdrafting of fireplaces having chimneys on the exterior of the house; 0.016 in. WG for oil-fired furnaces or boilers; and 0.020 in. WG for gas-fired furnaces. These values are lower than the suctions that would be expected in a well-designed, properly operating flue for each respective type appliance during cold weather. By this approach, it is assumed that as long as the measured depressurization in the house is less than expected draft suction in the flue, backdrafting should not occur.

However, the house depressurization alone is not a sufficient indicator of whether backdrafting might occur. The depressurization values just cited assume that the flue is drawing normally during cold weather. If the flue is improperly installed or partially blocked, or if the weather is mild, the natural draft can be lower than that assumed in identifying those values, and backdrafting could occur even if the worst-case house depressurization is less than 0.012 to 0.02 in. WG.

More comprehensive procedures—smoke visualization test. Accordingly, each of the procedures just cited (CMHC88, TEC92) include additional tests to assess the actual draft in the flue under the worst-case conditions.

Both procedures include smoke visualization tests. In these cases, the combustion appliances are all turned off to allow the flue to cool. With exhaust fans operating, each appliance is then turned on one at a time, with the flue being allowed to cool between appliance tests. Backdrafting is assessed for several minutes for each appliance, by chemical smoke testing at the draft hood, barometric damper, and/or combustion zone. The flame is also observed for signs of roll-out.

If these tests indicate that backdrafting/spillage occurs for more than 30 seconds (TEC92) to 1 or 2 minutes (CMHC88) after the appliance is turned on—i.e., if the flue does not heat up sufficiently in that time to ensure proper draft—this result suggests a potential backdrafting problem.

More comprehensive procedures—direct suction measurements in flue. The smoke testing provides only a qualitative indication that flue gases are (or are not) in fact moving up the stack. Both of the cited procedures supplement this smoke testing with quantitative measurements of the draft in the flue of traditional natural-draft appliances, with the exhaust fans operating. This test would provide the most definitive indication whether proper drafts are being maintained despite the worst-case conditions.

To make the measurements, a test hole would be drilled about two feet downstream of the draft hood or barometric damper. The suction in the flue at that point (relative to the house where the appliance is located) can be measured using a suitable pressure gauge. Pressure measurement devices (draft testers) are manufactured specifically for the purpose of measuring drafts in hot flues, consistent with heating industry practice. With proper taps, considering flue temperatures, the pressure gauges used for sub-slab pressure measurements can also be adapted for this use.

The acceptable suction in the flue relative to the house will vary depending upon the outdoor temperature (CMHC88, TEC92). When the outdoor temperature is below 20 °F, the suction in the flue (relative to the house) would be expected to be about 0.020 in. WG or greater. But when the outdoor temperature is above 80 °F, a flue suction as low as 0.004 in. WG may be all that can be expected.

More comprehensive procedures—carbon monoxide (CO) measurements. The more comprehensive procedures in References CMHC88 and TEC92 also include measurements for CO, in the house and in the flue. High levels in the house could be indicating that combustion products are entering the house, perhaps due to backdrafting. High levels in the flue could be indicating that the draft is insufficient to draw adequate combustion air into the flame zone.

Carbon monoxide levels in the living area should generally be below 2 ppm (TEC92). These procedures recommend that maximum levels in the living area be limited to those specified in EPA's Ambient Air Quality Standards (EPA87c): 9 ppm CO averaged over an 8-hour period, and 35 ppm averaged over a 1-hour period. Levels should never exceed 200 ppm (TEC92). Carbon monoxide levels in the flue upstream of the draft hood or barometric damper should be no greater than 100 ppm after 5 minutes of operation (TEC92).

Most mitigators will not have the equipment to make CO measurements.

More comprehensive procedures—general comments. The more comprehensive procedures discussed in the preceding paragraphs (CMHC88, TEC92) have been designed primarily for professionals in the field of combustion system evaluation. The procedures have been developed to enable an

US EPA ARCHIVE DOCUMENT

extensive diagnosis of the combustion appliance and flue system. The diagnosis addresses a broad range of issues, e.g., whether the flue is blocked or improperly connected, or whether CO is entering the circulating house air through a cracked heat exchanger. Although very important, some of these issues extend beyond the immediate goal of the radon mitigator, which is to ensure that a mitigation system does not create or exacerbate a backdrafting situation.

On this basis, the question might be asked whether a mitigator drawing from these more comprehensive test procedures must in fact conduct all of the steps in these more comprehensive procedures, if these procedures are to be used. Or, on the other hand, might it be sufficient to carry out only selected components of these extensive procedures? Definitive guidance on this question is not possible at this time.

Simple measurement of flue temperature. A simple test based on flue temperatures has been identified for combustion systems having draft hoods (ASHRAE89).

The objective of this procedure is to ensure that the draft in the flue is sufficiently great such that the amount of house air drawn in through the draft hood to dilute the combustion products by at least 40%. This determination is made using a simple calculation based upon temperature measurements upstream and downstream of the draft hood, and in the house.

For this testing, all exhaust fans are turned on, and outdoor doors and windows are closed, as discussed previously (see *Establishing "worst-case" conditions).* The positioning of interior doors is not specified. The flue temperature measurements are usually done with the flue hot. The citation specifies that the testing be conducted when natural infiltration is expected to be low, i.e., when the indoor-outdoor temperature differential is no greater than 30 °F, and when the wind velocity is no more than 5 mph.

While the test is fairly simple, it requires temperature measurement equipment that many mitigators may not have.

11.5.2 Backup Backdrafting Test Methods for House Occupants

Several inexpensive devices are available that can be left in the house to alert the occupants when backdrafting occurs. These devices detect either CO in the room, or the temperature near the draft hood.

These devices can be useful as a backup to the mitigator testing options described in Section 11.5.1, alerting the occupants if potential problems arise at some point following installation. However, they should not be considered as a substitute for testing by the mitigator, for two reasons. First, the CO detection devices are generally triggered by CO concentrations of 100 ppm and higher—a level higher than that of concern in EPA regulations. Second, the devices depend upon monitoring and replacement by the occupant; failure of the occupant to inspect and replace the devices would render some of the devices useless.

Electronic carbon monoxide detectors. These monitors operate in a manner similar to smoke detectors, sounding an audible alarm when CO levels exceed a given concentration for a given period of time. The higher the CO concentration, the more quickly the alarm sounds. The alarm would typically sound after the detector had been exposed to 100 ppm for perhaps an hour or longer.

These devices can plug into a wall outlet. Underwriters Laboratories has recently approved the first of these devices. Because they give an audible alarm and appear to require a minimum of occupant maintenance, these devices may be the most reliable (although most expensive) of the alternative backup techniques for monitoring potential backdrafting, as long as they are not disabled by the occupant.

Passive carbon monoxide detectors. Passive CO detectors contain a CO-sensitive dot which changes color, from a light color to gray or black (depending on concentration), when exposed to CO. The rate of change depends upon the CO concentration; a concentration of 100 ppm would cause some color change in perhaps 15 to 45 minutes, while a concentration of 400 ppm may cause a response in 2 to 4 minutes.

The device would be mounted at a convenient location in the house. The occupants would have to monitor the color of the device. For this reason, the electronic devices, which attract the occupant's attention with an audible signal, may be more reliable.

The detector is reusable for a period of time, returning to its original light color when the CO levels drop. However, the dot will ultimately remain dark or bleach out, and the detector will have to be replaced. The frequency of replacement may be once every few months. Although these detectors are relatively inexpensive (perhaps $3 to $4), it might be unrealistic to expect the average homeowner to regularly replace them over periods of years.

Passive temperature detectors. One passive temperature detector on the market uses a temperature-sensitive dot, and is mounted beside the flue just below the draft hood. When the flue is drafting properly, relatively cool house air is being drawn past the device and up into the draft hood. Under these conditions, the device is at a low temperature, and it displays a white dot. However, if backdrafting occurs, the flow through the hood will consist of hot combustion products flowing out of the flue into the house. Under these conditions, the dot in the device turns black.

As with the passive CO detector, the occupants would have to monitor the device. This temperature-based device is not reusable, so that it would have to be replaced each time it was exposed to high temperature.

11.5.3 Steps Required When Backdrafting Is Observed

If combustion appliance backdrafting is observed after the mitigation system is installed, the first step will generally be to repeat the backdrafting measurement with the ASD system off. A system-off test will identify the extent to which the

US EPA ARCHIVE DOCUMENT

ASD system may be responsible for, or is contributing to, the problem.

In cases where the ASD system is in fact responsible for creating a backdrafting problem that did not exist before, one might consider modifications to the system. If much of the house air being drawn into the system may be coming from certain identifiable unsealed openings in the slab or wall, sealing of those openings, if practical, might reduce house air flow into the system sufficiently to take care of the problem. Or, the ASD fan might be turned down to lower power, drawing less air out of the house (but possibly also reducing radon reduction performance).

However, even in the (probably infrequent) cases where the ASD system is the sole source of the problem, modifications to the ASD system might not be a reliable, permanent solution. The seals to reduce air flow out of the house may fail over time. Or, the fan operating at reduced speed may be turned back up to full power at a later time by an occupant unaware of the backdrafting threat.

A further consideration is that, in the large majority of cases where backdrafting is observed, the problem will be that backdrafting was occurring even before the ASD system was installed, or else, that the draft was marginal prior to system installation. In these cases, the mitigation system will only be contributing to a pre-existing condition, and no adjustments to the ASD system could ever be a complete solution to the problem.

Thus, in most cases, the appropriate solution to backdrafting will be some step (or combination of steps) to improve draft. Such steps could include providing an outdoor source of combustion and draft air for the combustion appliance, sealing leaks in the cold-air return ducting, modifying or unblocking flues, etc. In many cases, such steps will be beyond the expertise of a radon mitigator, and *will require the services of a professional building diagnostician or a heating, ventilating, and air conditioning contractor*. Mitigators and homeowners who do not have expertise in these areas would be well advised not to undertake these types of steps on their own.

One step that is commonly taken to provide additional combustion and draft air consists of installing an opening through the house shell near the appliance, covered with a grille. Installing such an opening would be analogous to permanently opening a window. The opening should provide an entry route for fresh air to be drawn in to provide the needs of the appliance, reducing basement depressurization and increasing the natural infiltration rate. Installation of such an opening would create some increase in heating and cooling costs.

However, even this apparently simple step is not always straightforward. If the opening were on the downwind side of the house, it is theoretically possible that rather than helping alleviate the problem, the opening could exacerbate the problem, with the wind effects increasing basement depressurization. Or, if ducting is going to be installed to direct the air from the opening toward the location of the combustion appliances, calculations could be necessary to ensure that the shell opening and the ducting are the correct size to provide the amount of makeup air needed. Other problems that could result from this step include problems with moisture and freezing. These possible complications are the reason why steps to correct backdrafting problems should be left to professionals in that field.

According to EPA's interim standards, a radon mitigator is only responsible for correcting a "*. . . backdrafting condition caused by the installed mitigation system . . . .*" (EPA91b). The mitigator is not responsible for correcting a pre-existing backdrafting problem not caused by the system. However, once the mitigation system is installed, the mitigator may become involved with the problem, even if the system is not responsible. Thus, in very cold climates where houses are commonly built with low infiltration rates, or in tight houses in any climate, mitigators may wish to include backdrafting tests prior to mitigation, so that the issue can be faced before mitigation is undertaken.

11.6 Procedures for Suction Field Extension Measurements

When an ASD system is not performing as well as expected, one reason will often (although not always) be that the system is not adequately depressurizing the region that it is supposed to be depressurizing—i.e., the sub-slab, the block wall cavities, or the sub-membrane. Thus, the most valuable diagnostic test to conduct when ASD performance is inadequate is the measurement of the suction field extension being maintained with the system operating.

Even when an ASD system appears to be performing satisfactorily during mild weather, quantitative suction field extension measurements (Section 11.6.2 below) may still be of value, to suggest whether the system is maintaining sufficient depressurization to prevent being overwhelmed during cold weather.

11.6.1 Qualitative Check with Chemical Smoke

One simple approach for obtaining a quick, qualitative assessment of suction field extension is to utilize chemical smoke to visualize flow down into (or up through) existing unsealed openings in the slab, wall, or membrane with the ASD system operating. Such openings could include, e.g., the wall/floor joint around slabs, mortar joint cracks in block walls, or unsealed seams (if any) in the crawl-space membrane.

Slight flows through these openings can best be observed when only a small amount of smoke is released near the opening, using a flashlight to back-light the smoke. Smoke flows down into the opening would suggest that the sub-slab (or wall cavity or sub-membrane) is being depressurized at that location by the system. No flow down (or flow upward) would suggest that the depressurization is weak or non-existent at that location, or that the house is still depressurized relative to the sub-slab.

During this testing, it would be advisable to challenge the system, to the extent possible, by turning on any exhaust appliances (such as the clothes drier and kitchen exhaust fan) that might be routinely depressurizing the house under normal living conditions. If a central furnace fan is present in the basement, it should be turned on, also.

If there are accessible openings to enable smoke-stick testing around the entire slab (or wall or membrane), this test would generally indicate whether the sub-slab is being depressurized everywhere, or where the sub-slab is being depressurized weakly or not at all. This information could help guide the placement of additional suction pipes. Unfortunately, suitable existing openings may not be present or accessible at all locations, limiting the ability of the smoke-stick approach to survey the entire slab. Smoke flows may be obscured by air currents in the room. And the approach will not provide a quantitative measure of the depressurization being achieved, limiting the ability to assess whether the depressurization present at the time of measurement might likely be overwhelmed when faced with a challenge from weather or appliance usage.

11.6.2 Quantitative Measurement with Micromanometer

Because of the limitations of the smoke-stick approach, it will generally be necessary to make quantitative suction measurements with a micromanometer whenever there is doubt about whether the suction field is extending adequately.

Test holes would be drilled through the slab (or wall face or membrane) to permit these suction measurements to be made at specifically selected locations, to more reliably identify the locations that are not being reached by the suction field. Such non-depressurized locations would be sites where additional suction pipes might be warranted.

The procedure for this post-mitigation suction field diagnostic will be very similar to that described in Section 3.3 for pre-mitigation diagnostics. The major difference is that the suction field is now being established by the mitigation fan rather than by a vacuum cleaner.

- ***Equipment and materials required***

  - The equipment and materials needed for post-mitigation diagnostics will be generally the same as those listed in Section 3.3.1 for pre-mitigation qualitative suction field diagnostics. However, since the suction field is now being generated by the mitigation fan, the following items will *not* be needed:

    -- The industrial vacuum cleaner.

    -- Vacuum cleaner exhaust hose.

    -- The 1.25-in. masonry drill bit, which was to drill the slab hole needed to accommodate the vacuum cleaner nozzle.

  - The rotary hammer drill for drilling 1/4- to 1/2-in. test holes might not be needed, if suitable test holes already exist as a result of earlier, pre-mitigation suction field extension testing. However, even if pre-mitigation testing was conducted, the drill might still be needed. Additional holes might be required in different locations for the post-mitigation testing, and previous test holes that were mortared shut will need to be reopened.

  - If a digital micromanometer is used to quantitatively measure depressurizations, this testing will provide quantitative suction field extension data as discussed in Section 3.3.2. The Magnehelic® gauge and the vacuum cleaner speed controller, identified in Section 3.3.2, are not necessary. The Magnehelic® gauge and the speed controller were needed to ensure that the vacuum cleaner was operated to best simulate a mitigation fan; since an actual mitigation fan is being used for the post-mitigation testing, this is no longer an issue.

- ***Test procedure***

  - The test procedure for the post-mitigation suction field testing would be essentially the same as that described in Section 3.3.1. However, the steps in Section 3.3.1 associated with the vacuum cleaner would no longer be applicable:

    -- The location for the vacuum cleaner suction hole would no longer have to be selected. Suction will now be drawn at the mitigation suction pipe location.

    -- The 1.25-in. hole through the slab for the vacuum nozzle no longer has to be drilled, nor the vacuum mounted in the slab.

  - The location for the 1/4- to 1/2-in. suction measurement test holes would be selected in a manner similar to that indicated in Section 3.3.1. Some additional judgement may be used in selecting locations, in an effort to address regions where it is suspected the suction field is not reaching.

    -- For suction measurements under slabs, the post-mitigation testing would likely use the same test holes used for any pre-mitigation diagnostics, if conducted. More test hole sites might be selected to better define the limits of the suction field extension. For houses having multiple slabs (e.g., a basement with an adjoining slab on grade), test holes will likely have to be drilled in both slabs.

    -- For suction measurements inside block wall cavities, one test hole should initially be drilled into one block cavity of each perimeter block wall and each interior load-bearing block wall. These test holes might logically be near the center of each wall, toward the slab (since suction near the footings, where much of the soil gas enters the void network, may be most important).

US EPA ARCHIVE DOCUMENT

-- For suction measurements beneath SMD membranes, test hole location would be selected in the same manner as test holes for slabs.

- As with the pre-mitigation testing, the house would be placed in the condition that will be used throughout this testing. It is recommended that any commonly used appliances which might tend to depressurize the house be left running throughout the testing, so that the test results will show the suction field extension under challenging conditions.

- The sub-slab depressurization being maintained at the test holes would be measured with the ASD system operating.

  -- With slab holes, the sample tube from the micromanometer would be installed in the test hole as described in Section 3.3.1.

  -- With holes in block walls, the tubing would be inserted an inch or so into the cavity, and sealed with rope caulk.

  -- With membrane holes, a couple inches of the tubing should be inserted through the membrane, and carefully sealed with duct tape. The open end of the tube beneath the membrane must be horizontal (or be embedded in sub-membrane gravel), so that it is not potentially plugged by being embedded in impermeable soil.

  -- Record the observed range of readings on the micromanometer, and/or the average reading.

- If suction is not extending at all to some of the quadrants, the mitigator may wish to drill additional test holes closer to the suction pipe(s) and to repeat the measurement steps above at these new holes, to identify how far the suction field is in fact extending.

- All holes that have been drilled through the slab or block must be permanently closed with hydraulic cement or other nonshrinking cement after testing is complete. Holes through crawl-space membranes should be closed, preferably by sealing a piece of polyethylene sheeting on top of the hole using urethane caulk (for cross-laminated polyethylenes) or other sealant (for regular polyethylenes).

• ***Interpretation of results***

- If no depressurization can be measured in one or more locations beneath the slab (or inside the wall, or beneath the membrane), or if, in fact, the sub-slab is *pressurized* relative to the house, the mitigator can consider installing one or more additional suction pipes as necessary to treat these locations.

  -- If the region not being adequately depressurized by the initial system is relatively limited in size, it will likely be cost-effective for the mitigator to proceed immediately to install an additional suction pipe in that region, without doing any further diagnostics first.

  -- If the region not being adequately depressurized by the initial system is relatively large, the mitigator may wish to conduct further suction field diagnostics in that region, using a vacuum cleaner to draw suction in the region -- i.e., using the "pre-mitigation" diagnostics approach in Section 3.3.1 or 3.3.2, but limiting the test holes to sites within the untreated region. These vacuum cleaner diagnostics could help determine how many additional suction pipes should be installed, and where they should be located within that region.

  Alternatively, the mitigator might often find it more cost-effective to simply use best judgement in installing one or more additional suction pipes, without vacuum cleaner diagnostics. If those additional pipes still did not reduce the indoor radon concentration to the desired level, the mitigator would then have to repeat the suction field extension measurements with the modified system operating, to identify any remaining portions of the slab (or wall or membrane) still not being depressurized.

- If the suction field extension measurements are made during mild weather, it must be recognized that the increased house depressurization that will exist during cold weather will reduce the sub-slab depressurizations observed during the mild-weather measurements. Thus, if a house is not reduced below 4 pCi/L during mild weather, and if suction field extension measurements show some portion of the sub-slab not being depressurized during mild weather, the problem might be expected to become even worse during cold weather.

Even if the newly installed mitigation system seems to be satisfactorily reducing indoor radon levels during mild weather, the mitigator may wish to perform these quantitative post-mitigation suction field extension measurements in houses where the sub-slab communication seems marginal. Such measurements would be especially logical in marginal houses where pre-mitigation suction field measurements had been made, and where the test holes through the slab are thus already existing. In these cases, post-mitigation suction field measurements would reveal whether sub-slab depressurizations during mild weather are marginal. Such marginal sub-slab depressurizations could be overwhelmed by the increased challenge created by thermally induced house depressurization during cold weather.

As discussed in Section 3.3.2 and elsewhere, where the post-mitigation suction field testing is made during mild weather and/or without exhaust appliances operating, the measured sub-slab depressurizations should be great enough to compensate for the increased house depressurizations anticipated under the more challenging conditions. As stated in Section 3.3.2, the conservative goal would be to maintain the following depressurizations everywhere under the slab: at least 0.015 in. WG, if the measurements are made in mild

weather with exhaust appliances operating; 0.025 to 0.035 in. WG, during mild weather without exhaust appliances operating; and 0.01 to 0.02 in. WG, during cold weather without exhaust appliances operating.

In practice, it appears that these figures are conservative, and that ASD systems can often perform well even when sub-slab depressurizations are less. Thus, lesser depressurizations might sometimes be adequate. However, the mitigator must recognize that a system providing only marginal sub-slab depressurization during less challenging conditions may be overwhelmed during more challenging conditions.

11.7 Procedures for Radon Grab Sampling and Sniffing

The procedures for post-mitigation radon grab sampling and sniffing will be the same as those described in Section 3.4 for pre-mitigation measurements. The primary difference is that the post-mitigation measurements will be performed with a different emphasis, for the purpose of determining why an installed system is not providing the desired radon reductions.

Sampling inside block walls. Perhaps the best example of how radon grab sampling or sniffing might be effectively utilized in post-mitigation diagnostics would be in basement or crawl-space houses with block foundation walls, where a stand-alone SSD, DTD, or SMD system is not providing adequate radon reductions. If sub-slab (or sub-membrane) suction field extension measurements suggest that the entire sub-slab seems to be adequately depressurized, then the question would arise regarding whether the block walls might continue to be radon sources despite the apparently effective slab treatment.

Samples would be drawn from inside selected block cavities in each of the foundation walls with the mitigation system operating, to determine if one or more walls have distinctly elevated radon levels. If elevated walls are found, this result would indicate that the system is not preventing soil gas entry into that wall, and the wall is still a source. In such cases, a BWD component to treat the elevated walls might be added to the initial system. Or, alternatively, additional SSD or SMD suction pipes might be installed near these walls.

Sampling at unsealed openings. In general, grab sampling/sniffing at suspected soil gas entry routes can be used to determine whether gas in those unsealed openings is high in radon, suggesting that that entry route is not being adequately treated. That is, high-radon soil gas is in that opening, presumably entering the house, rather than low-radon house air exiting through that opening. Any openings in the slab of sufficient size to enable insertion of a grab sampling tube should have been sealed in conjunction with the installation of the ASD system. However, to the extent that such intermediate or large unsealed slab openings still exist, grab sampling in those openings would suggest whether the suction field is preventing radon entry there.

If the slab opening is, e.g., a crack which is too small for the sampling tube to be inserted, a sheet of plastic can be sealed over a length of the crack using duct tape, and the buildup of radon beneath the plastic over a number of hours can be measured, to assess whether radon is entering *through* the crack. The plastic sheet will hinder any convective flow of soil gas that might otherwise occur up through the crack, so that this approach would be less reliable in revealing the potential significance of the crack than would be suction field measurements beneath the slab at the crack. However, the plastic-sheet approach may sometimes be qualitatively useful in cases where it is not desired to drill test holes through the slab at the crack location.

Where SSD or DTD has been installed in a basement house having poured concrete foundation walls, grab sampling in any unsealed wall openings (e.g., around utility penetrations) could indicate whether radon is continuing to enter through these openings. That is, it would indicate whether the SSD or DTD system were adequately treating the exterior face of the concrete wall.

Sampling beneath the slab. Radon grab sampling or sniffing beneath slabs through test holes will probably not commonly be useful as a post-mitigation diagnostic method. However, it might be of practical value in certain cases.

A sub-slab radon grab sample could easily be drawn through the test hole during the post-mitigation suction field extension measurements discussed in Section 11.6. However, the results from a grab sample will probably not be useful if the sub-slab is being effectively depressurized at that test hole. The sub-slab radon concentration will commonly be of only secondary interest as long as the ASD system is preventing the soil gas from entering the house at that location.

But where the sub-slab depressurization is only marginal or is non-existent, the sub-slab radon grab sample might occasionally help determine the importance of adding a suction pipe to treat that untreated region of the slab. Higher sub-slab radon concentrations could suggest increased importance in adding a suction pipe in that area, if there are entry routes nearby through which this sub-slab radon could enter the house. Note that the radon entry potential is a function not only of the sub-slab radon level, but of the ability of that radon to enter the house at that location (Tu90, Tu91a).

Where the house has a combined substructure—e.g., a basement having an adjoining slab-on-grade or crawl-space wing—and where only the basement is being directly treated (by a SSD or DTD system), grab sampling could help determine the extent to which the untreated adjoining wing may be contributing to any residual indoor radon level. With the basement ASD system operating, high radon levels under the adjoining slab on grade, or at slab openings in the slab on grade, would suggest that radon is continuing to enter the house via the adjoining slab. That is, the basement ASD system is not adequately intercepting the soil gas moving toward the adjoining slab. Likewise, high radon levels in the untreated crawl space would suggest that the crawl space is continuing to be a radon source. In such cases, a SSD or SMD component treating the adjoining wing may have to be added to the basement ASD system.

US EPA ARCHIVE DOCUMENT

Sub-slab radon grab sampling after mitigation can also provide other information which may occasionally be of help in diagnosing a house. Very high post-mitigation sub-slab radon concentrations can suggest a potentially increased *diffusive* flux of radon into the house. With a very high concentration gradient between the sub-slab and the house, radon could diffuse up through the open space in slab cracks and other openings, or even through unbroken concrete. Convective flow is normally the predominant mechanism by which radon enters a house; diffusion is generally expected to be a minor contributor. However, in cases where sub-slab radon concentrations are very high, the diffusive component could become important, especially when the desired indoor levels are well below 4 pCi/L.

A grab sample of radon in the suction piping would provide a qualitative indication of the sub-slab radon concentration. The levels in the piping will be diluted by indoor and outdoor air that has been drawn into the system. If radon levels in the piping are dramatically lower than sub-slab concentrations, this would be an indication that a significant amount of leakage is occurring.

11.8 Procedures for Chemical Smoke Flow Visualization Tests

General procedures. The simple procedures for chemical smoke testing are as described earlier in Sections 3.3.1 and 11.6.1. A small amount of smoke is released near the seam or opening of interest. A flashlight back-lighting the smoke is sometimes helpful in detecting the smoke patterns. Smoke movement into the seam or opening means that: a) the opening is depressurized relative to the house; and b) the opening is not sealed, allowing house air to pass through it. Similarly, smoke movement away from the opening means that the opening is pressurized relative to the house, and that it is not sealed, with gas flowing through it into the house.

Chemical smoke is an inert smoke-like, fine powder. It can be used with various types of dispensers, which release small puffs or a brief, continuous stream. Chemical smoke devices are considered safer than are, e.g., burning punk sticks or cigarettes. In addition to the fire hazard, the smoke leaving punk sticks and cigarettes tends to rise, since it is released at high temperature. These thermal effects on the smoke can mask the sometimes subtle effects of the system-created air movement that the smoke is intended to visualize.

Assessment of openings in foundation. Chemical smoke can be useful in a number of ways. It can be used around unsealed cracks, openings, and seams in slabs, block walls, and crawl-space membranes with ASD systems operating, to determine whether the sub-slab, wall cavity, or sub-membrane depressurization is extending to those locations. Similarly, they can be used near sealed cracks, openings, and seams with the ASD systems operating, to confirm whether in fact they are effectively sealed (in which case there should be no air movement into or out of these openings).

Smoke visualization can be used around potential entry routes which may not be being treated by the ASD system, to assess whether some form of sealing or treatment of these potential routes might be necessary. For example, smoke tests around a floor drain may help confirm whether or not it is effectively trapped. Smoke tests at a hole through the poured concrete foundation wall of a basement with a SSD system could show whether soil gas is entering the basement through that hole.

If smoke flow is not distinctly upward over a potential entry route, this result does not necessarily prove that radon is not entering by convective flow through that opening. At very low pressure differentials across the slab, the upward flow of soil gas may be too low to be detected by the smoke. However, the smoke test is easy to perform, and is often worth conducting when initial ASD performance is inadequate, even though the smoke cannot reveal very subtle flows.

Detection of piping leaks. Smoke visualization can be used to determine whether all of the seams in the ASD system piping have been sealed. If, e.g., a SSD suction pipe is not adequately sealed where it penetrates the slab, or if any fitting joint in the PVC piping is not sealed on the suction side of the fan, smoke will be drawn into that joint. Unlike the smoke flows into or out of slab cracks, floor drains, etc., discussed in the previous two paragraphs, where air movement may sometimes be subtle, the smoke flows into leaks in the ASD piping will usually be unambiguous, due to the relatively high suctions in the piping.

Similarly, smoke visualization can be used around joints in the piping on the pressure side of the fan, to ensure that exhaust gas is not leaking out at those joints. While the pressure-side piping will almost always be outside the living area (i.e., in the attic or out-doors), there will nevertheless be occasions where the mitigator will be well advised to make certain that there are no leaks there.

For example, pressure-side leaks in attic exhaust piping will be particularly undesirable in attics where the central forced-air furnace fan (and hence some cold-air return ducting) is in the attic, a situation occasionally encountered. Pressure-side leaks in garage-mounted fans are generally undesirable, since there is almost always a door and perhaps other openings between the attached garage and the living area. With exterior stacks having the fan at the bottom of the stack, radon leaking from the stack beside the house could potentially become re-entrained through windows. This potential problem can be of particular concern when the exterior stack is fabricated from sections of rain gutter downspouting, which is less amenable to air-tight sealing at the joints.

Assessment of backdrafting. As discussed in Section 11.5.1, smoke visualization tests at the draft hood or barometric damper, or at the air inlet to the combustion zone, is a convenient and effective method for assessing whether a combustion appliance is drafting properly (and whether an ASD system is impacting that draft).

11.9 Procedures to Test for Exhaust Re-Entrainment

In some cases, an ASD system might not be providing adequate radon reductions, but the preceding post-mitigation diagnostics might fail to reveal the cause of the problem.

US EPA ARCHIVE DOCUMENT

Suction field extension testing might show the sub-slab, block wall, or sub-membrane to be depressurized everywhere. Radon grab sampling might confirm that radon is not entering through untreated block foundation walls. In such cases, the residual radon present in the house may be entering through some mechanism other than soil gas flow through the slab and walls.

One such additional mechanism could be re-entrainment of the ASD exhaust. Other mechanisms could include entry in well water, and release for high-radium building materials, discussed in later sections.

If the ASD exhaust is being released above the eave, and is at least 10 ft from openings in the house shell, re-entrainment should usually not be a significant problem. Under these conditions, the appropriate first steps to take when the process of elimination suggests that re-entrainment may be occurring are: a) a visual inspection, to confirm, e.g., that the discharge is not near a window; and b) smoke stick tests, to confirm that there are no leaks in the piping on the pressure side of the fan.

If these steps failed to reveal a problem, and if re-entrainment continued to be suspected, two other approaches might be considered. One would be to temporarily modify the exhaust, redirecting the exhaust so that it discharges at a location so remote that re-entrainment should be eliminated or at least dramatically reduced. This might easily be done by clamping non-perforated flexible corrugated piping to the end of the existing stack, and routing that flexible piping to a remote point. If this step reduced indoor radon levels, it would be evidence that the original exhaust configuration was resulting in re-entrainment.

Another possible approach would be to inject a tracer gas into the exhaust piping, and then measuring for the tracer inside the house. The general procedures associated with tracer gas testing have already been discussed, in Section 3.5.6. As indicated in that earlier section, if tracer gas testing were considered at all by a mitigator, it would most likely be conducted using a HFC refrigerant as the tracer, due to the availability and ease of detection of these gases. As emphasized previously, due to concerns about stratospheric ozone, any such testing should be conducted using HFC refrigerants, rather than the CFCs or HCFCs.

11.10 Procedures for Well Water Radon Analysis

The procedure for conducting radon analysis in well water was described in Section 3.5.2, in connection with pre-mitigation testing.

11.11 Procedures to Determine the Significance of Building Materials as a Radon Source

The procedures for gamma measurements and surface flux measurements, to help determine whether building materials might be a radon source, were described in Section 3.5.3, in connection with pre-mitigation testing.

US EPA ARCHIVE DOCUMENT

US EPA ARCHIVE DOCUMENT

Section 12
Operation and Maintenance Requirements for Active Soil Depressurization Systems

Following the installation and the initial check-out of the system by the mitigator, the homeowner or occupant will be responsible for subsequent routine operation and maintenance of the system.

If operating problems develop with the system, or if non-routine maintenance is required, the owner/occupant must be in a position to note the problem, and must ensure that any necessary repairs or maintenance are completed.

12.1 Instructions Following Installation

As a minimum, the mitigator must provide sufficient information about the system so that the owner/occupant can detect subsequent operating problems, and can contact a professional mitigator to make any necessary repairs. The mitigator should also indicate any routine maintenance that the owner/occupant will be required to perform. Depending upon the mitigator's practices and the client's inclinations, the mitigator might also provide information to enable the owner/occupant to undertake some initial, simple diagnostics prior to calling the mitigator, should operating problems develop.

EPA's interim radon mitigation standards (EPA91b) specify that the mitigator shall provide the client with the following information, among other information:

- A description of the system, at the centrally located label indicated in Section 4.8.2.
- The name and telephone number of the mitigator, or other person to contact should problems develop with the system.
- A statement indicating any required maintenance by the owner/occupant.
- The method of interpreting the gauge or alarm which monitors system performance, in accordance with Section 4.8.1. This would include the expected response of the monitor if a problem developed with the system.
- A recommendation that the house be retested for radon at least once every 2 years.

In addition to these specifications in the interim standards, mitigators may wish to provide additional information to aid the owner/occupant in proper operation and maintenance of the system. The extent to which this additional information is provided will be determined by the mitigator's practices and the owner's inclinations. Among the additional information that EPA might ultimately require, based on the current draft of EPA's final Radon Mitigation Standards, are:

- Copies of contracts and mitigator warranties.
- The basic operating principles of the system.
- A description of the proper operating procedures of any mechanical or electrical systems installed, including manufacturer's operation and maintenance instructions and warranties.
- A list of appropriate actions for the owner/occupant to take if the system failure warning device indicates system degradation or failure.

12.2 Operating and Maintenance Requirements

12.2.1 System Fan

The major mechanical component of an ASD system is the system fan.

Routine maintenance. The primary routine maintenance for the fan is periodic inspection of the warning device that has been installed on the ASD system, to ensure that the fan is continuing to operate properly. In this regard, homeowners/occupants should be encouraged to routinely check the pressure gauge or pressure alarm on the system piping, or the ammeter in the fan wiring (see Section 4.8.1).

The client should be given clear instructions on how to read and interpret the system warning device following installation.

If the system is equipped with a pressure gauge, the owner/occupant must confirm that system suction remains in the proper operating range, as marked on the gauge. Mounting the gauge in an area frequented by the occupant will help ensure that such checking will be done. Supplementing the gauge with a visual or auditory alarm would attract the occupant's attention if the suction falls out of the acceptable range between checks.

If the indicator device mounted on the system is an alarm only, with no gauge, the occupant should be encouraged to routinely check the indicator light confirming that the alarm is properly activated.

The owner/occupant might also periodically listen to the fan, to ensure that it is operating. Some fans operate so quietly that the occupant may have to listen closely to confirm that it is in fact operating.

The fact that the fan is operating does not mean that it is operating properly. When electrolytic capacitors in the fan circuitry fail while the fan is operating, it is sometimes possible for the fan to continue operating for some time at greatly reduced performance (Fi91). For these reasons, listening to the fan cannot be a substitute for checking the suction gauge. However, it may sometimes be a convenient supplement. If the fan begins making growling noise, it could be an indication that the bearings are about to fail, which should alert the occupant.

Ensuring that the fan is not disabled. In what might be considered a part of routine maintenance, the owner/occupant must ensure that the fan is not turned off when it should be operating, or inappropriately turned down below the power setting established during installation.

Sometimes when the house will be left unoccupied for a period of time, the owners/occupants might wish to turn the fan off during their absence. If this were done, they must ensure that the fan is turned back on upon their return.

Also, owners/occupants sometimes choose to turn the fan off during mild weather when windows are often open. However, this practice is discouraged. Experience has shown that the system will not always be turned back on every time the windows are closed. Moreover, the open windows will not always compensate for the ASD system being off. Thus, there can be a resulting increase in indoor radon.

If the fan circuit is equipped with a voltage (speed) controller, the owner/occupant must ensure that this controller is not inadvertently turned down to a lower speed than that at which it was set by the mitigator. Any reduction in power to the fan should be accompanied by careful radon measurements to confirm that the reduced fan speed does not result in unacceptable increases in indoor radon. In addition to potentially increasing indoor radon levels, operating the fan at too low a speed could shorten fan life by increasing motor temperature, since the lower air flows may be insufficient to provide the necessary motor cooling.

Fan failure and repair. Periodic inspection of the system warning device, as discussed above, should alert the owner/occupant if the fan has failed. The owner/occupant is responsible for ensuring that the fan is repaired or replaced if it fails.

Commonly, repair or replacement will be accomplished by contacting the mitigator who installed the system, or some other professional. This will be especially true when the system is under warranty. As specified in EPA's standards, the client must be advised following installation regarding what response from the warning device indicates a problem. The client must also be provided with the name and telephone number of the mitigator, to facilitate contact when problems arise.

As discussed in Section 2.3, the mitigation fans on many commercial ASD installations have operated for a number of years without failure. However, these systems have not yet operated for a sufficiently long period to enable a more quantitative estimate of the typical lifetime of these fans in this application. A few fans have failed after only a year or two. The most common cause of fan failure appears to be failure of the electrolytic capacitor in the fan circuitry. Less frequently, bearing failure can be a cause.

Simple steps that the owner/occupant might take prior to contacting mitigator. When the warning device indicates that system suction has dropped below the acceptable operating range, this will not always be the result of a problem with the fan. In some cases, it may be due to problems with the system piping or foundation seals, as discussed in Section 12.2.2. Also, the situation creating the problem can sometimes be addressed by simple corrective action on the part of the owner/occupant.

Thus, mitigators may sometimes wish to provide the client with a listing of simple diagnostic tests that the owner/occupant can quickly perform to help identify the nature of the problem, and, in simple cases, to correct it.

Steps that the owner/occupant might take when the suction moves outside the acceptable range could include the following. A mitigator evaluating the problem might initially take similar steps.

1. If the suction has dropped to zero, check the fan to determine if it is not operating.

   a. If it is not operating, has power been interrupted? Is the switch in the fan circuit on? If the fan is simply plugged into an outlet, is the plug still in the outlet? Try flipping the circuit breaker for the circuit that the fan is on.

   b. If the fan is not operating and if the power is on, the fan has probably failed, or else there is a problem in the switch or the wiring to the fan. In this case, the owner/occupant should call a professional mitigator to have the fan repaired or replaced. In some cases, repairs can be implemented on site (e.g., installing a new capacitor in some fans). In other cases, the fan will have to be returned to the manufacturer for repair, or replaced with a new fan.

      Historically, many of the manufacturers of fans commonly used in ASD systems have offered 3-year warranties on the fans. Some warranties have recently been reduced to 1 year. If the fan fails within the warranty period, the mitigator or the homeowner could return it to the manufacturer for repair or replacement, if it cannot be repaired on site. If the fan is removed for repair, the mitigation system will, of course, cease

US EPA ARCHIVE DOCUMENT

to be operational for the duration of the repairs unless a temporary replacement fan can be installed.

c. If the suction has dropped to zero and the fan seems to be operating, there may be: condensation or ice blocking the tubing between the gauge and the suction piping; failure of the gauge; an interruption in the piping between the gauge and the fan; a blockage of the piping by ice or condensate; or failure of the fan.

   The owner/occupant should inspect to see if the tubing to the gauge appears blocked, to ensure that the system piping is intact, and to identify any potential blockage of the piping. If no breaks or blockage are discovered that the owner/occupant can repair, the owner/occupant should call the mitigator.

   Smoke-stick testing might be performed in the hole through the piping where the gauge is mounted to see if there is any suction in the piping. If the smoke flow indicates that the piping is under suction despite the zero reading on the gauge, the gauge is malfunctioning or its tubing is blocked. If there is indeed no suction, the fan might be removed and checked to determine if the rotor is in fact turning.

2. If the suction has dropped below the acceptable range, but has not dropped to zero, the owner/occupant should do the following.

   a. If the fan circuit has been equipped with a voltage (speed) controller, check the controller to make sure that it has not inadvertently been changed to a lower setting.

   b. Check for leaks in the system piping or in slab/wall/membrane seals, as discussed in Section 12.2.2.

   c. Check for potential blockage of the piping downstream of the fan by ice or condensed moisture, or on the suction side of the fan between the fan and the measurement location, as discussed in Section 12.2.2.

   d. If the above steps do not reveal an apparent reason for the decrease in suction, call the mitigator. One possibility may be that the fan capacitor has failed, causing the fan to operate at reduced suction.

3. If the suction has increased significantly above its normal value, this, too, could be indicating a serious problem with the system, although the problem probably is not caused by the fan.

   a. The owner/occupant should check the system piping upstream of the fan (and upstream of the measurement location) for signs of possible blockage, as discussed in Section 12.2.2.

12.2.2 Piping Network, and System and Foundation Seals

Several aspects of the piping network, and of the seals associated with the system piping and the slab/wall/membrane, can also contribute to reduced performance of the ASD system. Part of the owner/occupant's operation and maintenance responsibility includes inspecting these features, and conducting (or arranging for) appropriate repairs as necessary.

Piping network (other than seals). Depending upon the climate and the design of the piping network, sections of the piping can sometimes become partially or completely blocked. This blockage can result in either: a decrease in system suction, if the blockage is on the pressure side of the fan, or on the suction side between the fan and the measurement location; or an increase in measured suction, if the blockage is on the suction side upstream of the measurement location. In either case, the blockage can dramatically reduce system performance.

Blockage on the pressure side of the fan, if it occurs, will most commonly result from accumulation of ice in exterior stacks during cold weather. Moisture in the soil gas will condense in the stacks. Since exterior stacks cannot practically be insulated (except by framing them in), this condensed moisture can sometimes freeze along the interior walls of the stack in particularly cold climates, despite the momentum of the exhaust gas and the consistently moderate temperature at which the soil gas will enter the stack. This ice can significantly decrease the effective diameter of the pipe (increasing back pressure on the pressure side of the fan, thus decreasing the suction on the suction side of the fan). In extreme cases, the stack might be frozen closed entirely.

In locales where ice will partially block the stack, this back pressure should considered in the design of the system, and in advising the occupant regarding the suctions that might be expected on the gauge during cold weather. Often, it appears, this partial blockage will reduce, but not be fatal to, the performance of the system. If the stack freezes up completely, no good solution to this problem is apparent; occasional application of heat (e.g., hot water) to the exterior of the stack may be the only option. Clearly, indoor stacks would be preferred in such climates, if stacks are required.

Blockage on the suction side of the fan can result from low points in the horizontal piping where condensate can accumulate. If the suction gauge indicates increasing suctions, the owner/occupant should look for such potential low spots upstream of the gauge. If low points exist and a drain tube has been installed, the owner/occupant should check to ensure that the tube is not plugged and that condensate is draining freely through the tube. If serious undrained low points are discovered in horizontal piping runs, the mitigator should be contacted.

In some cases, increased suction (and reduced flow) may result not from any blockage of the piping, but from reductions in sub-slab communication, due to sub-slab moisture during wet seasons. In the worst case, accumulation of water in the sub-slab pit beneath SSD suction pipes could be respon-

US EPA ARCHIVE DOCUMENT

sible for the increase in suction, especially if the open end of the pipe is low enough in the pit to be below water level. Flooding of drain tiles in DTD systems could produce the same effect.

Blockage of a SSD suction pipe could also result if the pipe dropped into the sub-slab pit, so that the open end was now resting on the bottom of the pit. The piping should be inspected for evidence whether this has occurred.

System seals. If system seals on the suction side of the fan break over the years, this would result in an increase in system flows (and a decrease in the measured suction). Such seals include:

- fitting joints in the piping network;
- the seal around the suction pipe, where it penetrates the slab, wall, or membrane;
- traps in sump covers of sump/DTD systems, such as illustrated in Figures 33A and 33B;
- the seal between the sump cover and the slab in sump/DTD systems, and the seal between the cover and any penetrations in addition to the trap; and
- the check valve in DTD/remote discharge systems, as illustrated in Figure 4.

If the owner/occupant observes a major reduction in system suction, he/she should inspect these seals, insofar as they are visible, to see if there any major failures are visible. Are any of the piping joints obviously loose? Is the caulk seal around the SSD pipe penetration through the slab still intact? Is the trap in the sump cover either full of water, or, if it is a waterless trap, is the weighted ring or ball seated properly? Where there is a significant leak in the system piping, such a leak can sometimes be detected by the hissing sound of air being drawn through the opening.

If visual inspection is ambiguous regarding whether some of these seals are in fact intact, and if the owner/occupant has a chemical smoke device (or other smoke generator) available, a smoke flow visualization test would quickly indicate how well the seals are maintained.

The owner/occupant would be well advised to periodically check these seals visually, to ensure that they are remaining intact.

If ruptured seals are apparent from this inspection, or if the trap in the sump cover is dry or not airtight, the owners/occupants may be able to restore some of these seals themselves. In other cases, the owner/occupant may need to call the mitigator.

Foundation seals. If suctions in the ASD piping decrease and flows increase, one other possible explanation could be short-circuiting of house or outdoor air into the system through ruptured seals in slab, wall, and membrane openings. For example, broken caulk seals at the wall/floor joint or the perimeter channel drain could increase air leakage into a basement SSD system. Broken seals between the crawl-space membrane and the perimeter foundation wall could increase air leakage into crawl-space SMD systems.

As with the system seals discussed previously, the owner/occupant should inspect these foundation seals if a significant decrease in system suction is observed. In fact, the occupant would be well advised to periodically check these seals visually in any event, to ensure that they are remaining intact. A chemical smoke test could supplement the visual inspection.

If an occupant has a smoke device available, he/she would be well advised to also periodically check any other seals that were installed as part of the mitigation system, even if they do not necessarily directly impact the performance of the ASD system. For example, if a floor drain has been trapped with a waterless trap, the smoke stick could be used to confirm that the trap is continuing to be effective, by demonstrating that gas is not flowing up into the house through the drain.

If a water trap has been installed in a floor drain or sump cover, water should routinely be added to the trap.

Summary. If the measured system suction moves outside the range specified on the gauge by the mitigator, and if the owner/occupant cannot identify and correct the cause of the problem using the steps outlined above, the owner/occupant should contact the mitigator.

In some cases, the measured system suction may remain within the indicated range, but may still change significantly (in one direction or the other) from the levels that it has historically been maintaining. In such cases, the owner/occupant would be well advised to follow the steps outlined above, to see if the cause of the change can be explained and corrected. If the changes cannot be reversed, but if the suctions are still within the indicated range, the owner/occupant may wish to conduct a follow-up radon measurement before contacting the mitigator, to see if the suction changes have in fact degraded the system's radon reduction performance.

12.2.3 Follow-Up Indoor Radon Measurements

EPA's interim mitigation standards (EPA91b) indicate that the mitigator should recommend that the homeowner re-test for radon at least once every 2 years.

Testing even more frequently might be warranted if the owner/occupant observes any changes in the system the might imply changes in its performance, as indicated above. Significant changes in climate or house operation, or remodelling of the house, could also warrant re-testing.

While EPA's standards do not specify the type of measurement technique to be used for such follow-up testing, the owner/occupant will probably find it least expensive and most convenient to use either a charcoal detector or an alpha-track detector. These devices can be readily purchased locally, deployed by the owner/occupant, and mailed directly to a laboratory for analysis. Since the owner/occupant's concern

will commonly be one of the family's long-term exposure to radon, alpha-track detectors, deployed for 3 to 12 months, may be a logical selection. If the owner/occupant is trying to obtain a relatively quick measure of, for example, the impact of some observed change in system suctions, a charcoal detector, deployed for perhaps 2 days, may be a better choice to address that objective.

US EPA ARCHIVE DOCUMENT

US EPA ARCHIVE DOCUMENT

Section 13
Installation and Operating Costs for Active Soil Depressurization Systems

In estimating the costs of ASD systems, it is necessary to consider: a) the cost of installing the system at the outset; and b) the cost each year of operating the system after installation.

General considerations regarding installation costs. Installation costs can vary significantly, depending upon a variety of factors.

Perhaps the most important factors are associated with the characteristics of the house. Important house characteristics include the substructure type, the nature of the sub-slab communication (in houses with slabs), the house size, the floor plan, and the degree of interior finish, among others. House characteristics can impact the costs of the ASD system by determining, among other things:

- the ASD variation selected;
- the number and location of suction pipes;
- the nature of the system fan;
- the routing of the piping network;
- the degree of foundation sealing required;
- the extent to which existing finish must be removed or restored;
- the extent of pre- and post-mitigation diagnostics required.

Other factors influencing installation costs are associated with the practices of the individual mitigators. Different mitigators provide different levels of services; for example, different levels of pre- and post-mitigation diagnostics, different warranties, and different qualities of finish on the system. Also, different mitigators have different labor, fringe benefit, and overhead rates.

Because installation costs can vary so much between one installation and the next, installation costs are presented in this document as a range, incorporating the ranges of house characteristics and mitigator practices. The incremental impacts of certain key system design variables on installation costs, such as adding suction pipes, are also shown.

In most cases, materials costs are only a small contributor to the total installation cost. Commonly, labor costs constitute about 70 to 80% of the total installed cost is SSD and DTD systems (He91c). Materials costs will be a somewhat greater portion of the total in SMD systems, due to the cost of the membrane material.

General considerations regarding operating costs. Operating costs for ASD systems include four elements: 1) the cost of electricity to operate the system fan; 2) the heating and cooling penalty resulting from treated house air being withdrawn and exhausted from the house during cold and hot weather; 3) the cost of system repairs and maintenance; and 4) the cost of any periodic remeasurement of indoor radon levels that a homeowner may wish to conduct in order to ensure that the system is continuing to perform satisfactorily.

The operating cost for a particular house will depend upon a variety of factors. These include:

- The amount of electric power consumed by the fan. This will be determined by: the specific fan selected; and where that fan is operating on its performance curve, since operation at less than maximum rated flow will result in reduced power consumption.
- The impact of the system on the house ventilation rate. This will be determined by: the amount of house air exhausted by the system; and the impact of that exhaust on the house ventilation rate. Exhausting a certain amount of house air by the system will not necessarily increase ventilation rate by that amount; it may, in part, modify the ventilation pattern without changing the overall rate.
- The local climate. An increase in the house ventilation rate induced by the ASD system will clearly have a lesser heating and cooling penalty in a mild climate than in a climate with very cold winters or very hot, humid summers.
- The efficiency of the heating and cooling system in the house.
- The local cost of electricity and fuel.

Because operating costs can be influenced by so many variables in practice, the costs are shown as a broad range in this

document. The assumptions that were used in deriving these costs, and the ranges of variables covered for each variation of the ASD process, are shown in Table 5.

Situations could arise that would be outside the range of the individual assumptions shown in the table. For example, a high-suction/low flow fan might be used that would have a power consumption higher than the range in the table. However, it is believed that the ranges of variables included in Table 5 result in operating cost ranges which reasonably reflect the broad range of costs that will be encountered in practice.

13.1 Sub-Slab Depressurization Costs

13.1.1 SSD Installation Costs

Relatively simple systems. In one definitive study of SSD installation costs (He91b, He91c), five mitigators were asked to provide cost estimates for installing SSD systems in each of several "baseline" houses, reflecting a range of house design variables (basement vs. slab-on-grade substructure, finished vs. unfinished basement, one vs. two stories). In each house, the baseline SSD system was defined by 12 system design

Table 5. Assumptions Used in Estimating Annual Operating Costs for ASD Systems

Variable	Range	Comments
Fan power consumption		
- SSD, DTD, SMD	50-90 watts	Includes cases of: 50-watt tubular fan operating at full power (maximum rated flow); 90-watt tubular fan operating at reduced or full power; radial blower operating at reduced power.
- BWD	75-180 watts	Includes cases of: one 90-watt tubular fan operating at full or somewhat reduced power; two 90-watt fans operating near full power.
Fan operation	24 hr/day, 365 day/yr	Continuous operation assumed in all cases.
Increase in house ventilation rate		
- SSD	5-80 cfm	Based upon typical SSD exhaust flows of 20-100 cfm, assuming that, typically, 20-80% of the exhaust is treated house air (Ha89, Tu89, Bo91, Cl91, Fi91). Assumes that the house ventilation rate is increased by an amount equal to the amount of house air exhausted, which may not be literally true.
- Sump/DTD	10-120 cfm	Based upon typical sump/DTD exhaust flows of 50-150 cfm, assuming that 20-80% of exhaust is house air (same as SSD) when tiles are inside footings.
- DTD/remote disch.	5-80 cfm	Based upon typical DTD/remote discharge exhaust flows of 50-150 cfm, assuming that 10-50% of exhaust is house air (lower percentage than for SSD, since tiles are often outside footings).
- BWD	50-320 cfm	Based upon typical flows of 100-200 cfm in stand-alone BWD systems with 90-watt tubular fan, assuming that 50-80% of exhaust is house air (higher percentage than for SSD, since there are numerous openings between walls and basement). Upper end of range assumes two fans.
- SMD (vented crawl)	0-50 cfm	Based upon typical SMD exhaust flows of 20-100 cfm (covering both individual-pipe and sub-membrane piping variations), assuming that: 0-100% of the exhaust air is drawn from crawl space (Ma89b, Bo91, Fit92); and 25-50% of this crawl-space air is treated air drawn from the living area.
- SMD (unvented)	0-100 cfm	Based upon SMD exhaust flows of 20-100 cfm, assuming that 0-100% of the exhaust air is drawn from the crawl space, and that 100% of this crawl-space air is treated air.
Climate	Los Angeles-Minneapolis	Mild climate (Los Angeles) is 1698 heating F°-days and 565 cooling infiltration F°-days (She86). Extreme climate (Minneapolis) is 8034 heating F°-days and 1474 cooling F°-days.
Heating system	Forced-air furnace	Furnace burns natural gas and is 70% efficient.
Cooling system	Electric air conditioner	Air conditioner coefficient of performance is 2.0.
Cost of electricity	$0.060-0.096 per kWh	Covers range of costs around the U. S. in 1987, from Reference DOE87.
Cost of natural gas	$4.54-6.75 per 10^6 Btu	Covers range of costs around U. S. (DOE87).

US EPA ARCHIVE DOCUMENT

variables, including, e.g., the number and location of the suction pipes, the exhaust configuration, the degree of slab sealing, the amount of pre-mitigation diagnostics, etc. In addition to the specification of these 12 system design variables, the effort to ensure consistency among the estimates included specification of the assumed travel time to the job site, the system warranty, and the fact that applicable local building codes were to be met.

The baseline system for each house type was selected to represent what might be considered a relatively simple case for that house. For example, each baseline system involved only one SSD suction pipe, a relatively simple piping run, and no slab sealing.

The five mitigators represented different major mitigation markets around the country, and a range of approaches to the detailed practice of radon mitigation. They also represented a range of labor and overhead rates.

The estimated installation costs for these baseline (i.e., relatively straightforward) *SSD systems ranged between about* $800 and $1700 (in 1991 dollars). Again, this cost range covers a range of house characteristics and a range of mitigator practices and market conditions. For this reason, this range is felt to fairly well represent what a homeowner might expect to pay for a relatively simple, one-pipe SSD system installed by a commercial mitigator.

In a separate survey of 340 mitigators, the average cost of an SSD installation was reported to be $1,135 (Ho91). This broader mitigator survey did not compile information on the house characteristics and the SSD system design characteristics on which the reported cost was based. However, it is clear that this 340-mitigator average is quite consistent with the range of costs cited above.

More complicated systems. As emphasized previously, the baseline cases in References He91b and He91c represent, for the most part, relatively straightforward cases. Complications, such as additional SSD suction pipes, more elaborate piping runs, and more extensive sub-slab diagnostic testing, would serve to increase these baseline costs.

Accordingly, each of the five mitigators participating in that study were asked to estimate the incremental changes in the baseline costs that would occur if various alterations were made in the twelve baseline SSD design variables.

The impacts of the SSD design variables on the installation costs are discussed at length in Reference He91c. For the purposes here, it is sufficient to underscore that a number of design variables can influence the baseline costs. Among the SSD design variables having the greatest impact on costs among these five mitigators were:

- Adding SSD suction pipes. Each additional suction pipe could add roughly $70 to $380 to the installation cost, depending upon factors such as the degree of house finish, the configuration of the piping run, and the practices of the mitigator.

- Sealing the slab. The additional cost of caulking a perimeter wall/floor joint (when the joint is a narrow crack) might be roughly $30 to $360, depending heavily on slab size, and depending upon mitigator practices (e.g., degree of surface preparation). When the perimeter joint is a channel drain which is to be sealed as illustrated in Figure 32a, the additional cost could be roughly $150 to $700. These figures assume that the perimeter joint is accessible, and do not include any effort to remove and restore finish.

- Conducting pre-mitigation suction field extension diagnostics. In cases where a separate trip to the house is made to conduct the diagnostics, this step could add roughly $170 to $240 to the installation cost. The cost could vary outside this range, depending upon the distance of the house from the mitigator's offices, and upon the exact nature of the diagnostics performed.

The baseline cost estimates suggested that a reasonable installation cost range for *relatively straightforward* systems would be perhaps $800-$1,700, when the system is installed by a mitigator. From the discussion immediately above, it can be seen that, with more complicated systems, *the upper end of the installation cost range could increase to perhaps $2,500* or higher. Many mitigators will encounter some or all of these complications on occasion.

The preceding discussion of installation costs assumes that the system is installed by a professional mitigator. The use of a mitigator is recommended, because a proficient mitigator will have extensive experience with how systems must be designed and installed in order to be effective in houses in that area. Homeowners should not undertake mitigation installations as a "do-it-yourself" project unless they have carefully reviewed this manual and inspected installations in other houses similar to their own, and feel comfortably conversant with the principles behind ASD systems. If a homeowner installed a SSD system on his/her own, the installation cost would consist of the cost of materials: about $170-$480 for the relatively straightforward system, somewhat higher for more complicated systems.

13.1.2 SSD Operating Costs

Fan electricity and house heating/cooling penalty. Based upon the assumptions indicated in Table 5, the fan electricity and house heating/cooling costs for SSD systems will often fall within the following ranges:

Fan electricity	-	$ 30-75
Heating penalty (cold weather)	-	5-175
Cooling penalty (hot weather)	-	2-45
		$ 40-300 per year

This corresponds to about $3 to $25 per month in increased utility bills, on average.

The lower extreme in this range assumes the least fan power consumption and the lowest cost of electricity in Table 5, combined with the lowest exhaust rate, the mildest climate,

US EPA ARCHIVE DOCUMENT

and the lowest electricity and fuel costs. And conversely, the upper extreme assumes the combination of the maximum fan power consumption, maximum exhaust rate, most extreme climate, and highest electricity and fuel costs. Such combinations of best-case conditions on the one hand, or worst-case conditions on the other, will probably not frequently occur in practice. Thus, in most cases, the actual costs of fan power and heating/cooling will likely fall within a narrower range than that calculated above, probably within the range of $50 to $200.

System maintenance costs. In addition to the continuing fan electricity and house heating/cooling costs, SSD operating costs will also include some periodic maintenance expenses. These will likely include occasional repair or replacement of the fan, and occasional repair of piping and foundation seals.

With the relatively limited duration over which most SSD systems have been operating (generally 7 years or less), there is not a long-term statistical data base defining the average lifetime of SSD fans, or the frequency of repairs required. The current assumption is that the average fan will have to be replaced every 10 years, at a total cost of roughly $150 or more each time, including the cost of the fan and of the mitigator labor.

If the fan failed during the manufacturer's warranty period, usually 1 to 3 years, there would be no charge for the repaired or replaced fan. If the fan failed during the mitigator's warranty period, there would be no charge for the labor.

If the fan could be repaired on-site, e.g., by replacing the electrolytic capacitor in the fan circuitry, the cost would consist of the mitigator's labor. While this could vary from site to site, it would probably be on the order of $50 (unless, again, the failure occurred during the mitigator's warranty period).

If important seals rupture over the years (e.g., due to house shifting over wet and dry seasons, or to physical impacts against the system piping), these seals can probably often be repaired by the occupant an no significant expense. If a mitigator (or other service person) is hired to do this job, the cost would depend upon the extent of re-sealing required.

Follow-up radon measurements. EPA recommends that the mitigator suggest that occupants conduct follow-up indoor radon measurements at least once every 2 years following installation. The occupant may wish to consider measurements on a more frequent interval. Assuming that the occupant uses a charcoal or alpha-track detector, the cost of each measurement would probably be within the range of $10 to $40.

These measurements should be made in a part of the house where the occupants spend a lot of time. If certain members of the family spend much time in the basement, the occupant may wish to make simultaneous measurements in the basement and upstairs, which would increase the measurement cost, requiring two detectors each time instead of only one. To make sure that periodic follow-up measurements are comparable, so that any degradation in system performance can most reliably be detected, each follow-up measurement should be made at the same location in the house during the same time of year, and under the same house conditions, as the preceding follow-up measurements.

13.2 Sump/Drain-Tile Depressurization Costs

13.2.1 Sump/DTD Installation Costs

The study of ASD installation costs discussed in Section 13.1 (He91b, He91c) considered the incremental cost of installing a sump/DTD system rather than a SSD system.

The mitigators participating in that study estimated that installation of a sump/DTD system would cost about $16 to $50 more than a SSD system, due to the need to install a cover over the sump. This estimate assumes a relatively simple sump cover. It also assumes that a submersible pump is already present in the sump, so that the sump pump does not have to be replaced as part of the system.

Therefore, within the accuracy of these cost estimates, *the estimated installation cost for a baseline* (relatively straightforward) *sump/DTD system would be on the same order as that for a baseline SSD system, i.e., $800-$1,700 when installed by a mitigator*, as discussed in Section 13.1.1.

The installation cost for a sump/DTD system could be somewhat higher if a more elaborate cover is installed. If the sump does not already have a submersible sump pump, and if a submersible pump must therefore be installed as part of the sump/DTD system, this would further increase the cost of the sump/DTD system by roughly $100-$200. In addition, any complications on top of the baseline system—e.g., additional slab sealing—would increase the baseline sump/DTD cost, just as discussed for the SSD case.

Within the accuracy of these cost estimates, the cost increases that could result from more elaborate sump covers or sump pump replacement are felt to fall within the range of the cost increases that could result from the other complications that might arise. Accordingly, it is estimated that *the upper end of the installation cost range for sump/DTD systems would be about $2,500 or higher*, as is the case for more complicated SSD systems.

13.2.2 Sump/DTD Operating Costs

Fan electricity and house heating/cooling penalty. As indicated in Table 5, sump/DTD systems are assumed to increase the house ventilation rate to a somewhat greater extent than do SSD systems, thus increasing the heating/cooling penalty.

Using the same format as that in Section 13.1.2 for SSD systems, the ranges of fan electricity and house heating/cooling costs for sump/DTD systems are estimated to be:

US EPA ARCHIVE DOCUMENT

Fan electricity	-	$ 30-75
Heating penalty (cold weather)	-	10-250
Cooling penalty (hot weather)	-	5-70
		$ 40-400 per year

This compares with the range $40 to $300 cited previously for SSD systems. The lower end of the range remains basically the same for sump/DTD as for SSD because, at the very mild climate assumed for the best-case condition, doubling the minimum house air exhaust rate from 5 to 10 cfm (see Table 5) has very little impact on heating and cooling costs.

As discussed in Section 13.1.2, this full range is defined by the best-case and worst-case combinations of conditions. In practice, the actual costs will likely fall within a narrower range, probably $50 to $250.

System maintenance costs, and follow-up radon measurements. The costs for system maintenance and for follow-up monitoring would be the same for sump/DTD systems as for SSD systems, discussed in Section 13.1.2.

13.3 Drain-Tile Depressurization/ Remote Discharge Costs

13.3.1 DTD/Remote Discharge Installation Costs

Based upon limited experience with DTD/remote discharge systems, it is estimated that the typical installation costs of these systems will likely be in the same range as that for relatively straightforward SSD systems, i.e., $800-$1,700 when installed by a mitigator. This assumes that the cost of installing a SSD pipe beneath the slab will be generally comparable to that of excavating the drain tile and/or the drain tile discharge line outside the house for the DTD/remote discharge system. The effort required for this excavation will, of course, depend upon the depth of the tiles at the point of excavation.

For the purposes of this analysis, it is assumed that the installation cost of a stand-alone DTD/remote discharge system will generally not extend much above the baseline values. Unless SSD suction pipes have to be added into the system, it is thought to be less likely that the system will become sufficiently complicated to increase the cost to $2,500 or higher, as was estimated for complicated SSD and sump/DTD systems. Complications might arise with DTD/remote discharge systems, such as the need to seal the slab or to excavate to a greater depth to reach the drain tiles. However, it is believed that in many cases the added costs resulting from these complications will not be sufficient to increase the costs dramatically above the baseline range.

13.3.2 DTD/Remote Discharge Operating Costs

Fan electricity and house heating/cooling penalty. As indicated in Table 5, DTD/remote discharge systems are being assumed to cause the same increase in house ventilation rate as do SSD systems. Although the total exhaust rates from DTD/remote discharge systems are higher, the fraction of house air in these exhausts is assumed to be lower, since the tiles are commonly outside the footings.

On this basis, the full range of annual operating costs for fan electricity and heating/cooling penalty is the same for DTD/remote discharge as for SSD, i.e., $40 to $300 per year. And in practice, the actual costs will likely fall within the narrower range of perhaps $50 to $200 in most cases.

System maintenance costs, and follow-up radon measurements. The cost for system maintenance and for follow-on monitoring should be roughly the same for DTD/remote discharge systems as for the other ASD systems discussed previously.

13.4 Block-Wall Depressurization Costs

13.4.1 BWD Installation Costs

Experience with stand-alone BWD systems is much more limited than is experience with the other ASD variations, so that estimates of likely installation costs are more uncertain.

Individual-pipe variation. In basement houses that are relatively amenable to stand-alone individual-pipe BWD systems—i.e., where the basement is unfinished and the walls thus readily accessible, and where the major wall openings (especially the top block voids) are reasonably accessible for closure—EPA's research experience (Sc88) suggests that a homeowner might expect to pay roughly $1,500 to $2,500 to have the system installed by a mitigator. This cost range is greater than that indicated earlier for relatively straightforward SSD systems, because of: a) the increased number of suction pipes that will likely be needed (at least one per wall for the BWD system, compared to one total for the SSD system); and b) the increased wall sealing effort that may be required.

If the basement were partially finished, complicating both the installation of pipes and the sealing of the walls, or if the major wall openings were otherwise less accessible for closure, then the installation costs could be even higher (e.g., $3,000 or more).

Baseboard duct variation. Vendors of baseboard duct BWD systems (who have had experience installing similar systems over the years for basement water control) indicate that such systems can sometimes be installed for $2,000 to $2,500 (El88). These would presumably be the costs that would be obtained when the baseboard consists of plastic channel drain which is attached using epoxy adhesive, and when the basement is not highly finished and does not present unusual complications. If the basement is heavily finished, costs would be expected to be higher, due to the added costs of, e.g.: trimming the wall and floor finish to expose the wall/floor joint and accommodate the baseboard duct (and refinishing afterwards); penetrating finished stud walls which run perpendicular to the block wall; and removing and replacing

US EPA ARCHIVE DOCUMENT

US EPA ARCHIVE DOCUMENT

various obstructions that block access to the walls. Costs might also increase if the baseboard system is also expected to fulfil a water drainage function, and if a sump and sump pump need to be installed in conjunction with the system. Thus, in some cases, baseboard duct systems might be expected to cost more than $2,500 (e.g., $3,000 or more).

13.4.2 BWD Operating Costs

Fan electricity and house heating/cooling penalty. A stand-alone BWD system with a single 90-watt tubular fan can commonly have flows in the range of 100 to 200 cfm, higher than the range for either SSD or even DTD systems. Because the block walls are so leaky, it might be assumed that a relatively high fraction of this exhaust (50 to 80%) is treated house air drawn from inside the house, although there are not definitive tracer gas measurements to confirm that this is in fact the case.

On this basis, as indicated in Table 5, it is estimated that a single 90-watt fan could increase the house ventilation rate by 50 to 160 cfm. If a second fan is needed, as discussed in Sections 7.4 and 7.6, the increase in house ventilation rate could be 100 to 320 cfm.

Because of the high flows from stand-alone BWD systems, only the high-flow 90-watt tubular fans are considered for this cost estimate. Also, it is assumed that the fan will be operating closer to its maximum flow rate (and hence maximum power consumption) that would be the case in SSD systems. Thus, the assumed power consumption in Table 5 is 75 to 90 watts for one fan, and 150 to 180 watts for two.

With a single fan, the range of annual costs for fan electricity and for house heating/cooling, calculated using the assumptions in Table 5, would be:

Fan electricity	-	$ 40-75
Heating penalty (cold weather)	-	20-350
Cooling penalty (hot weather)	-	10-90
		$ 70-500 per year

This represents about $6 to $40 per month, on average. In practice, observed costs would likely fall within a narrower range of perhaps $100 to $400.

If two fans were used, the costs for fan electricity and for the heating/cooling penalty would double.

System maintenance costs, and follow-up radon measurements. The costs for system maintenance and for follow-up radon monitoring would be about the same for BWD systems as for the other ASD variations, as discussed previously. The one exception would be that, if the BWD system had two fans, the costs for fan repair or replacement would presumably double.

13.5 Sub-Membrane Depressurization Costs

13.5.1 SMD Installation Costs

Relatively simple systems. The study of ASD installation costs discussed for SSD systems in Section 13.1.1 (He91b, He91c) also considered the costs of SMD systems in crawl-space houses.

In this study, the "baseline" crawl-space houses addressed two house design variables (small vs. large crawl spaces and one vs. two stories). In each house, the baseline SMD system was defined by 13 system design variables. These system design variables defined, e.g., the method of distributing suction beneath the membrane (individual-pipe vs. sub-membrane piping approach), the exhaust configuration, and the degree of membrane sealing.

The baseline SMD system for each house was selected to represent the simplest case for that house. For example, the baseline systems were individual-pipe systems, with the membrane not sealed anywhere.

Again, estimates were obtained from each of five mitigators for these baseline SMD systems, as discussed in Section 13.1.1. These mitigators represented a wide range of different practices and markets around the U. S., and a range of labor and overhead rates.

The estimated installation cost for the baseline (i.e., relatively straightforward) SMD systems of the individual-pipe configuration in a crawl-space house with the membrane unsealed ranged between roughly $1,000 and $1,900 (in 1991 dollars). These costs are somewhat higher than those cited earlier for SSD, due to the labor and materials costs involved in installing a membrane over the crawl-space floor. The quality of the membrane material (i.e., the use of the more expensive cross-laminated polyethylene rather than regular polyethylene) will have an important impact on installation cost.

As indicated, this cost range covers a range of house characteristics and a range of mitigation practices and market conditions. For this reason, this range is felt to fairly well represent what a homeowner might expect to pay for a simple, individual-pipe SMD system without sealing of the membrane.

As discussed in Section 8.5.1 (see *Sealing the membrane - general),* it is generally recommended that the membrane be completely sealed. From the analysis in Reference He91b, the cost estimated by the mitigators for sealing the membrane everywhere using beads of caulk or other sealant ranged from $50 to $330, depending heavily on the size of the crawl space. As discussed in Section 8.1.1 (see *Cost of sub-membrane piping),* the addition of perforated piping beneath the membrane might be expected to add another $10 to $100 to the installation.

With the additional cost of the recommended membrane sealing, and including the option of installing sub-membrane piping, the previous statement regarding SMD installation

cost can be modified as follows: *The estimated installation cost for typical SMD systems of either the individual-pipe or sub-membrane piping configuration, with the membrane fully sealed, is generally in the range of $1,000 to $2,500.*

More complicated systems. Various complications might arise which could increase the cost of installing a SMD system. Some of these factors which could increase costs could be: additional individual suction pipes through the membrane; additional finish around the exhaust piping up through the house; large or complex crawl spaces; more elaborate efforts to attach the membrane to the perimeter walls, using a furring strip (usually not necessary); or higher-quality membrane materials. In extreme cases, some mitigators have reported excavation of parts of a crawl space, when there is initially insufficient headroom to provide the access needed to install and seal the membrane everywhere.

Some of these steps, such as additional individual suction pipes, should not cause the installation cost to exceed the $2,500 upper value of the range cited above. Other of these steps might result in total costs above $2,500. Accordingly, while it is expected that installation costs will often be within the range of $1,000 to $2,500, *installation costs could increase above $2,500 for some more complicated systems.*

The costs indicated above assume that the system is installed by a professional mitigator. As discussed in Section 13.1.1, the use of a mitigator is recommended. If a homeowner installed a SMD on his/her own, the installation cost would consist of the cost of materials, about $200-$650, depending upon the size of the crawl space, the quality of the membrane material used, and other variables.

13.5.2 SMD Operating Costs

Fan electricity an house heating/cooling penalty. The impact of the SMD system on the house heating and cooling costs will depend upon: a) whether the crawl space is isolated from the living area and vented; or b) whether it is open to the living area and is not vented, in which case it would be conditioned space. Table 5 lists both situations.

If the crawl space is *vented,* it is assumed for these calculations that 25 to 50% of the crawl-space air that is exhausted by the SMD system is conditioned air that was drawn into the crawl space from the living area. This is a relatively arbitrary assumption, since there are no tracer gas data confirming what this percentage will typically be. On this basis, the increase in the house ventilation rate is calculated assuming that 0 to 100% of the exhaust air is drawn from the crawl space (which has been shown by limited tracer gas data), and that 25 to 50% of this is conditioned air. See Table 5.

With this assumption, and with the other assumptions in Table 5, the range of annual fan electricity and heating/cooling costs for SMD systems in vented crawl spaces is as follows:

Fan electricity	-	$ 30-75
Heating penalty (cold weather)	-	0-120
Cooling penalty (hot weather)	-	0-30
	$	30-225 per year

This represents about $2 to $20 per month, on average. In practice, observed costs would likely fall within a narrower range of perhaps $30 to $150.

If the crawl space is *unvented,* and if it is open to the living area, then 100% of the air extracted from the crawl space by the SMD system will be conditioned house air, rather than just 25 to 50%. With this assumption, the range of annual fan electricity and heating/cooling costs for SMD systems in unvented crawl spaces would be as follows:

Fan electricity	-	$ 30-75
Heating penalty (cold weather)	-	0-240
Cooling penalty (hot weather)	-	0-60
		$ 30-375 per year

This represents about $2 to $30 per month, on average. In practice, observed costs would likely fall within a narrower range of perhaps $50 to $250.

It should be noted that, when an unvented crawl space exists which opens to the livable area as in this situation, it will often be a crawl space opening to an adjoining basement. In such cases, there will commonly also be a SSD or DTD system in the basement, supplementing the SMD system in the crawl space. In evaluating the total operating cost of the combined ASD system, the operating cost of the SSD or DTD component would also have to be considered.

System maintenance costs. One element of system maintenance costs will be periodic repair or replacement of the SMD fan. The costs for fan repair/replacement in SMD systems should be about the same as for SSD systems, discussed in Section 13.1.2:

- roughly $150 or more for each complete replacement of the fan, potentially required once every 10 years, if the replacement is not covered by warranty.

- perhaps $50, if the fan can be repaired on site by the mitigator (e.g., by replacing a capacitor), again if not covered by warranty.

With SMD systems, there may be another major maintenance cost: periodic repair or replacement of the membrane. There are insufficient historical data to determine how frequently this may have to be done, or the extent of the job that will be required.

Where the problem consists of a limited number of ruptures caused by, e.g., traffic in the crawl space by the occupant or by service personnel, the ruptures may sometimes be repaired by the homeowner. Perhaps duct tape or other sealant to cover the ruptures may be sufficient, or perhaps some section of the membrane may have to be replaced. If a mitigator is called to make these repairs, and if a couple hours of labor are required (plus perhaps some membrane material), the cost of these repairs to the homeowner might be expected to be on the order of $50-$150.

US EPA ARCHIVE DOCUMENT

US EPA ARCHIVE DOCUMENT

However, in some cases, it may be possible that essentially the entire membrane may have to be replaced. Extensive damage to membranes by rodents over relatively brief periods have been reported by one mitigator (Wi91). In addition, the membrane may also ultimately deteriorate over the years due to UV radiation, extended wear and tear, and other aging phenomena. It cannot be estimated at this time how frequently such complete replacements of the membrane may be necessary. Removal of the old membrane and installation of a new membrane by a mitigator might be expected to cost a homeowner on the order of $250-$1,100, or perhaps even more, depending upon the extent of membrane sealing required, the size of the crawl space, and the quality of membrane material used.

Follow-up radon measurements. The costs of follow-up indoor radon measurements with SMD systems would be the same as that discussed previously for other ASD variations, namely, $10-$40 for each measurement (assuming charcoal or alpha-track detectors), with at least one measurement made at least once every 2 years.

13.6 Active Soil Pressurization Costs

13.6.1 Soil Pressurization Installation Costs

Active soil pressurization installations will differ from the corresponding ASD approach (i.e., from SSD or BWD) in several ways which can influence installation cost. First, no exhaust stack will be required for pressurization systems, which should reduce the installation cost by roughly $50-$325 compared to the corresponding depressurization system. However, these cost savings may be partially offset by the need to install an air filter in the inlet air piping (see Figure 40), and a screened air intake.

In summary, a pressurization system might cost somewhat less to install than would the corresponding depressurization system, at least in the prevailing case where an exhaust stack is required for the depressurization system. However, due to the limited experience with pressurization systems, it should be assumed that the installation cost of a sub-slab pressurization system will be generally in the range indicated in Section 13.1 for a SSD system (i.e., $800-$1,700 for relatively straightforward systems installed by a mitigator, up to $2,500 or more for more complicated systems).

Likewise, the installation cost for a block-wall pressurization system should be assumed to be generally in the same range as indicated in Section 13.4 for BWD systems (i.e., $1,500-$2,500 for relatively straightforward systems, up to $3,000 or more for more complicated systems).

13.6.2 Soil Pressurization Operating Costs

Fan electricity and house heating/cooling penalty. Active sub-slab pressurization systems will be installed where flows beneath the slab are relatively high. However, there are no definitive data to suggest that the increased soil flows will cause a sub-slab pressurization system to increase the ventilation rate of the house any more or less than would a SSD system. Likewise, a block-wall pressurization system would be expected to impact house ventilation rate in about the same manner as would a corresponding BWD system.

As a result, there is currently no basis for expecting that the fan electricity or the house heating/cooling penalty for pressurization systems would be significantly different from those indicated earlier for the corresponding depressurization systems. Thus, the electricity plus heating/cooling penalty for sub-slab pressurization systems would be expected to be in the range of $40-$300 per year. Costs for block-wall pressurization systems would be in the range of $70-$500 per year for single-fan systems (or double that for two-fan systems).

System maintenance costs. In addition to the fan and seal maintenance requirements discussed previously for active depressurization systems, active soil pressurization systems will experience some costs associated with cleaning/replacement of the filter in the air inlet, and possibly with removing deposited dust from the pit beneath the slab. See Section 9.5.1.

Within the accuracy of these maintenance cost estimates, it is assumed that the homeowner personally takes care of this maintenance unique to the pressurization system. It is assumed that the costs involved with replacement air filters is small. Thus, the maintenance costs for active soil pressurization systems are assumed to be about the same as for the corresponding depressurization systems.

Follow-up radon measurements. The costs of follow-up indoor radon measurements with active soil pressurization systems would be the same as discussed previously for depressurization systems.

13.7 Passive Soil Depressurization Costs

13.7.1 Passive Soil Depressurization Installation Costs

The following discussion assumes that the passive system is retrofit into an existing house in exactly the same manner as an active system would be installed. That is, there would be no additional effort to improve the distribution of the passive suction field by retrofitting improved sub-slab aggregate or sub-slab perforated drain tiles beyond what existed originally. As discussed in Section 10, without such efforts (or perhaps even with such efforts), passive systems will perform much less effectively than will an active system. Efforts to retrofit sub-slab aggregate or drain tiles into existing houses would, of course, dramatically increase the system costs.

Passive soil depressurization installations will differ from the corresponding ASD systems in several ways which can influence installation cost.

- No fan will be required for passive systems, so that the material cost for the fan and the cost for installing and

wiring the fan will be eliminated. This could reduce the installation cost by perhaps $200-$250.

- The system stack will *have* to rise up inside the house; an exterior stack (or elimination of the stack) is not an option. Where a mitigator would be installing an interior stack anyway, even if the system were to be active, the requirement that the passive stack be indoors represents no additional installation cost. But where the mitigator would otherwise prefer to install an exterior stack, and where there are no provisions (such as an existing utility chase) to simplify installation of an interior stack, the requirement for an interior stack could increase costs by over $100 (He91b).

- If additional passive SSD suction pipes must be installed through the slab to get adequate performance from the passive system, installation costs would increase by $70-$380 per pipe added, as indicated in Section 13.1.1.

Based upon the above points, it is not possible to make a general statement regarding whether a passive system will be less or more expensive to install than an active system. In some cases passive systems may be less expensive; in other cases they may be of comparable cost or more expensive. But in all cases, they will be significantly less effective in reducing indoor radon levels.

13.7.2 Passive Soil Depressurization Operating Costs

Fan electricity and house heating/cooling penalty. Passive soil depressurization systems will avoid the need for electricity to operate a system fan (assuming that a supplemental fan does not turn out to be required, as discussed in Section 10). On this basis, the $30 to $75 per year included in prior sections for the electricity to run the fan would be eliminated altogether.

The house heating/cooling penalty would also be reduced dramatically. Whereas the active SSD, DTD, and SMD systems are estimated to exhaust up to 120 cfm of conditioned air from the house, passive systems may exhaust only a few cfm total. Thus, the total heating/cooling penalty might be on the order of only perhaps $5-$10 per year.

But again, it is emphasized that this dramatic reduction in electricity plus heating/cooling cost—from $40-$300 per year with an active system to $5-$10 with a passive system—is achieved only through a dramatic reduction in system performance.

System maintenance costs. With passive systems, the need for periodic repair or replacement of the fan would be eliminated.

However, the need to maintain system and foundation seals may become even more important with passive systems. At the low flows involved, short-circuiting of house air into the system could have a significant effect on the extension of the already-weak suction fields.

Follow-up radon measurements. The need for follow-up radon measurements would be increased with passive systems.

In addition to the normal follow-up measurements at least once every 2 years, recommended by EPA for active systems, persons installing passive systems must be prepared to make frequent measurements over the first year of operation. These measurements would be intended to identify the combinations of weather conditions and appliance operating conditions under which the passive system is likely to be overwhelmed, so that a supplemental fan can be installed and activated as needed.

13.8 Summary of ASD Installation and Operating Costs

The ASD installation and operating costs described previously in this section are summarized in Table 6.

US EPA ARCHIVE DOCUMENT

Table 6. Summary of Installation and Operating Costs for ASD and Related Systems

Mitigation System	Installation Costs (by Mitigator)		Operating Costs		
	Simple System	Complicated System	Fan Elect.+ Heat/Cool (per year)	System Maintenance	Follow-up Monitoring
SSD	$800-$1,700	to $2,500+	$40-$300 (full range); $50-$200 (more typical)	Repair fan (~$50) or replace (~$150) every 10 years. Repair seals.	At least once every 2 years @ $10-$40.
Sump/DTD	$800-$1,700	to $2,500+	$40-$400 (full range); $50-$250 (more typical)	As above.	As above.
DTD/ remote discharge	$800-$1,700	to $1,700+	$40-$300 (full range); $50-$200 (more typical)	As above.	As above.
BWD	$1,500-$2,500	to $3,000+	$70-$500 (full range, if one fan); $100-$400 (more typical). Double if two fans.	As above (if one fan). Double fan costs if two fans.	As above.
SMD	$1,000-$2,500	to $2,500+	$30-$225 (full range, *vented* CS[1]); ($30-$150 typical). $30-$375 (full range, *unvented*[1]); $50-250 (more typical).	Repair/replace fan every 10 years, as above. Repair membrane ($50-$150) or replace ($250-$1,100) at unknown intervals.	As above.
Active pressurization	Comparable to corresponding depressurization technology.	Comparable to depress. technology.	Comparable to depress. technology.	As above for SSD and BWD.	As above.
Passive depressurization	May be less or more expensive than corresponding active systems[2].	May be less or more expensive than active systems.	$0 for fan electricity (assuming no supplemental fan required). $5-$10 for heat/cooling penalty[2].	Fan repair/replacement unnecessary. Seal repair of increased importance.	Increased monitoring during first year to understand when system overwhelmed.

[1] Vented crawl spaces contain foundation vents permitting ventilation of the crawl space by outdoor air; the crawl space is considered non-conditioned space, isolated from the living area. *Unvented* crawl spaces are not ventilated by outdoor air, and are considered conditioned space; they may be open to livable space (such as adjoining basements).

[2] Assumes that no major effort is undertaken with passive systems to retrofit perforated piping or aggregate beneath the slabs of existing houses. Such retrofit steps would dramatically increase the installation cost of passive systems. Note that any reductions in installation and operating costs for passive systems are achieved at the expense of a major degradation in radon reductions.

US EPA ARCHIVE DOCUMENT

US EPA ARCHIVE DOCUMENT

Section 14
References

An92
Anderson, J. W., Quality Conservation, Spokane, WA, personal communication, March 1992.

Ang92
Angell, W. J., Midwest Universities Radon Consortium, University of Minnesota, Minneapolis, MN, personal communication, March 31, 1992.

Ar82
Arix Corp., "Planning and Design for a Radiation Reduction Demonstration Project, Butte, Montana," Report to the Montana Department of Health and Environmental Sciences, Appendix C, January 1982.

ASHRAE88
American Society of Heating, Refrigerating and Air-Conditioning Engineers, Inc., "1988 ASHRAE Handbook: Equipment," pp. 3.2-3.3, Atlanta, GA, 1988.

ASHRAE89
American Society of Heating, Refrigerating and Air-Conditioning Engineers, Inc., "Ventilation for Acceptable Indoor Air Quality: Positive Combustion Air Supply," ASHRAE Standard 62-1989, Appendix B, Atlanta, GA, 1989.

ASTM83
American Society for Testing and Materials, "Standard Test Method for Determining Air Leakage Rate by Tracer Dilution," *ASTM E 741-83,* Philadelphia, PA, 1983.

ASTM87
American Society for Testing and Materials, "Standard Test Method for Determining Air Leakage Rate by Fan Pressurization," *ASTM E 779-87,* Philadelphia, PA, 1987.

Ba92
Bainbridge, R. S., Aarden Testing, Sarasota, FL, personal communication, February 4, 1992.

Bar90
Bartholomew, J. C., Quality Conservation, Spokane, WA, personal communication, May 23, 1990.

Be84
Becker, A. P., and T. M. Lachajczyk, "Evaluation of Waterborne Radon Impact on Indoor Air Quality and Assessment of Control Options," EPA-600/7-84-093 (NTIS PB84-246404), September 1984.

Bo91
Bohac, D. L., L. S. Shen, T. S. Dunsworth, and C. J. Damm, "Radon Mitigation Energy Cost Penalty Research Project," report prepared by the Minnesota Building Research Center, University of Minnesota, September 15, 1991.

Br89
Brennan, T. M., M. R. Watson, C. E. Kneeland, J. P. Reese, and W. Evans, "Pressurizing Beneath Slabs in New York State," presented at The 1989 Annual AARST National Conference, sponsored by the American Association of Radon Scientists and Technologists, Bethesda, MD, September 1989.

Br91a
Brennan, T. M., M. E. Clarkin, M. C. Osborne, and W. P. Brodhead, "Evaluation of Radon Resistant New Construction Techniques," in *Proceedings: The 1990 International Symposium on Radon and Radon Reduction Technology. Volume 2,* EPA-600/9-91-026b (NTIS PB91-234450), pp. 8-1 through 8-13, July 1991.

Br91b
Brennan, T. M., "Interpreting the Vacuum Suction Test," in *Proceedings: The 1990 International Symposium on Radon and Radon Reduction Technology. Volume 3,* EPA-600/9-91-026c (NTIS PB91-234468), pp. 5-15 through 5-20, July 1991.

Br92
Brennan, T. M., Camroden Associates, Inc., Oriskany, NY, personal communication, March 26, 1992.

Bro90
Brodhead, W. P., WPB Enterprises, Inc., Riegelsville, PA, personal communication, April 26, 1990.

Bro92
Brodhead, W. P., WPB Enterprises, Inc., Riegelsville, PA, personal communication, March 11, 1992.

Bru83
Bruno, R. C., "Sources of Indoor Radon in Houses: A Review," *Journal of the Air Poll. Control Assoc.,* 33(2):105-109, 1983.

Ca60
Carrier Air Conditioning Company, "Carrier System Design Manual: Part 2 - Air Distribution," Syracuse, NY, 1960.

US EPA ARCHIVE DOCUMENT

Cl91
Clarkin, M. E., T. M. Brennan, and D. Fazikas, "A Laboratory Test of the Effects of Various Rain Caps on Sub-Slab Depressurization Systems," in *Proceedings: The 1991 International Symposium on Radon and Radon Reduction Technology. Volume 3*, EPA-600/9-91-037c (NTIS PB92-115377), pp. P4-31 through P4-41, November 1991.

CMHC88
Canadian Mortgage and Housing Corp., "Procedure for Determining the Safety of Residential Chimneys," in *Chimney Safety Tests User's Manual (Second Edition)*, Ottawa, Ontario, January 1988.

Cr91
Craig, A. B., K. W. Leovic, D. B. Harris, and B. E. Pyle, "Radon Diagnostics and Mitigation in Two Public Schools in Nashville, Tennessee," in *Proceedings: The 1990 International Symposium on Radon and Radon Reduction Technology. Volume 2*, EPA-600/9-91-026b (NTIS PB91-234450), pp. 9-15 through 9-33, July 1991.

Cr92a
Craig, A. B., U. S. Environmental Protection Agency, Research Triangle Park, NC, personal communication, January 1992.

Cr92b
Craig, A. B., D. B. Harris, and K. W. Leovic, "Radon Prevention in Construction of Schools and Other Large Buildings—Status of EPA's Program," in *Proceedings: The 1992 International Symposium on Radon and Radon Reduction Technology. Volume 2*, EPA-600/R-93-083b (NTIS PB93-196202), pp. 10-151 through 10-171, May 1993.

Cra91
Crawshaw, D. A., and G. K. Crawshaw, "Mitigation by Sub-Slab Depressurization Under Structures Founded on Relatively Impermeable Sand," in *Proceedings: The 1991 International Symposium on Radon and Radon Reduction Technology. Volume 3*, EPA-600/9-91-037c (NTIS PB92-115377), pp. P4-15 through P4-30, November 1991.

Cu92
Cummings, J. B., J. J. Tooley, Jr., and N. Moyer, "Radon Pressure Differential Project, Phase I. Florida Radon Research Program," EPA-600-R-92-008 (NTIS PB92-148519), January 1992.

DeP91
DePierro, N., T. Key, and J. Moon, "The Effectiveness of Radon Reduction in New Jersey," in *Proceedings: The 1990 International Symposium on Radon and Radon Reduction Technology. Volume 2*, EPA-600/9-91-026b (NTIS PB91-234450), pp. 7-83 through 7-99, July 1991.

Di86
Dietz, R. N., R. W. Goodrich, E. A. Cote, and R. F. Wieser, "Detailed Description and Performance of a Passive Perfluorocarbon Tracer System for Building Ventilation and Air Exchange Measurements," in *Measured Air Leakage of Buildings, ASTM Special Technical Publication 904*, H. R. Trechsel and P. L. Lagus, Eds., American Society for Testing and Materials, pp. 203-264, August 1986.

DOE87
U. S. Department of Energy, Energy Information Administration, "Household Energy Consumption and Expenditures 1987. Part I: National Data," p. 81, Washington, D. C., 1987.

Du90
Dudney, C. S., L. M. Hubbard, T. G. Matthews, R. H. Socolow, A. R. Hawthorne, K. J. Gadsby, D. T. Harrje, D. L. Bohac, and D. L. Wilson, "Investigation of Radon Entry and Effectiveness of Mitigation Measures in Seven Houses in New Jersey," EPA-600/7-90-016 (NTIS DE89016676), August 1990.

Du91
Dudney, C. S., D. L. Wilson, R. J. Saultz, and T. G. Matthews, "One-Year Follow-Up Study of Performance of Radon Mitigation Systems Installed in Tennessee Valley Houses," in *Proceedings: The 1990 International Symposium on Radon and Radon Reduction Technology. Volume 2*, EPA-600/9-91-026b (NTIS PB91-234450), pp. 7-59 through 7-71, July 1991.

El88
Ellison, H., Safe-Aire, Inc., Canton, IL, personal communication, September 1988.

EPA87a
U. S. Environmental Protection Agency, "Radon Reduction in New Construction: An Interim Guide," OPA-87-009, August 1987.

EPA87b
U. S. Environmental Protection Agency, "Radon Reference Manual," EPA-520/1-87/20 (NTIS PB88-196654), September 1987.

EPA87c
U. S. Environmental Protection Agency, "National Primary and Secondary Ambient Air Quality Standards," Code of Federal Regulations, Title 40, Part 50, as amended, July 1, 1987.

EPA88a
Henschel, D. B., "Radon Reduction Techniques for Detached Houses: Technical Guidance (Second Edition)," EPA/625/5-87/019 (NTIS PB88-184908), January 1988.

EPA88b
U. S. Environmental Protection Agency, "Reducing Radon in Structures: Manual (Second Edition)," student manual utilized in EPA's radon mitigation training course, September 1988.

US EPA ARCHIVE DOCUMENT

EPA89a
Mosley, R. B., and D. B. Henschel, "Application of Radon Reduction Methods (Revised)," EPA/625/5-88/024 (NTIS PB89-205975), April 1989.

EPA89b
U. S. Environmental Protection Agency, "Radon Reduction Techniques in Schools: Interim Technical Guidance," EPA-520/1-89-020 (NTIS PB90-160086), October 1989.

EPA89c
U. S. Environmental Protection Agency, "Radon Technology for Mitigators: Exercises and Supplemental Material," supplement to the student manual utilized in EPA's radon mitigation training course, 1989.

EPA91a
Clarkin, M. E., and T. M. Brennan, "Radon-Resistant Construction Techniques for New Residential Construction: Technical Guidance," EPA/625/2-91/032, February 1991.

EPA91b
U. S. Environmental Protection Agency, "Radon Contractor Proficiency Program Interim Radon Mitigation Standards," December 15, 1991.

EPA92a
U. S. Environmental Protection Agency, "A Citizen's Guide to Radon (Second Edition)," EPA 402-K92-001, May 1992.

EPA92b
U. S. Environmental Protection Agency, "Technical Support Document for the 1992 Citizen's Guide to Radon," EPA 400-R-92-011 (NTIS PB92-218395), May 1992.

EPA92c
U. S. Environmental Protection Agency, "Consumer's Guide to Radon Reduction," EPA 402-K92-003, August 1992.

EPA92d
U. S. Environmental Protection Agency, "Indoor Radon and Radon Decay Product Measurement Device Protocols," EPA 402-R-92-004 (NTIS PB92-206176), July 1992.

EPA93
U. S. Environmental Protection Agency, "Protocols for Radon and Radon Decay Product Measurements in Homes," EPA 402-R-92-003, June 1993.

Er84
Ericson, S.-O., H. Schmied, and B. Clavensjo, "Modified Technology in New Construction, and Cost Effective Remedial Action in Existing Structures, to Prevent Infiltration of Soil Gas Carrying Radon," *Radiation Protection Dosimetry*, 7:223-226, 1984.

Fe92
Femto-Tech, Inc., "Instruction Manual: Model RS410F Radon Survey Instrument," Carlisle, OH, 1992.

Fi89
Findlay, W. O., A. Robertson, and A. G. Scott, "Testing of Indoor Radon Reduction Techniques in Central Ohio Houses: Phase 1 (Winter 1987-88)," EPA-600/8-89-071 (NTIS PB89-219984), July 1989.

Fi90
Findlay, W. O., A. Robertson, and A. G. Scott, "Testing of Indoor Radon Reduction Techniques in Central Ohio Houses: Phase 2 (Winter 1988-1989)," EPA-600/8-90-050 (NTIS PB90-222704), May 1990.

Fi91
Findlay, W. O., A. Robertson, and A. G. Scott, "Follow-Up Durability Measurements and Mitigation Performance Improvement Tests in 38 Eastern Pennsylvania Houses Having Indoor Radon Reduction Systems," EPA-600/8-91-010 (NTIS PB91-171389), March 1991.

Fis92
Fisher, E. J., Office of Radiation Programs, U. S. Environmental Protection Agency, Washington, D. C., personal communication, January 9, 1992.

Fit92
Fitzgerald, J., Jim Fitzgerald Contracting, Minneapolis, MN, personal communication, July 22, 1992.

Fo89
Fowler, C. S., A. D. Williamson, B. E. Pyle, F. E. Belzer III, D. C. Sanchez, and T. Brennan, "Sub-Slab Depressurization Demonstration in Polk County, Florida, Slab-on-Grade Houses," in *Proceedings: The 1988 Symposium on Radon and Radon Reduction Technology. Volume 1*, EPA-600/9-89-006a (NTIS PB89-167480), pp. 7-65 through 7-78, March 1989.

Fo90
Fowler, C. S., A. D. Williamson, B. E. Pyle, F. E. Belzer, and R. N. Coker, "Engineering Design Criteria for Sub-Slab Depressurization Systems in Low-Permeability Soils," EPA-600/8-90-063 (NTIS PB90-257767), August 1990.

Fo92
Fowler, C. S., A. D. Williamson, B. E. Pyle, F. E. Belzer, and R. N. Coker, "Radon Mitigation Studies: South Central Florida Demonstration," EPA-600/R-92-207 (NTIS PB93-122299), October 1992.

Fu91
Furman, R. A., and D. E. Hintenlang, "Sub-Slab Pressure Field Extension Studies on Four Test Slabs Typical of Florida Construction," in *Proceedings: The 1990 International Symposium on Radon and Radon Reduction Technology. Volume 2*, EPA-600/9-91-026b (NTIS PB91-234450), pp. 8-29 through 8-43, July 1991.

US EPA ARCHIVE DOCUMENT

Ga92
Gadgil, A. J., Y. C. Bonnefous, and W. J. Fisk, "Relative Effectiveness of Sub-Slab Pressurization and Depressurization Systems for Indoor Radon Mitigation: Studies with an Experimentally Verified Numerical Model," in *Proceedings: The 1992 International Symposium on Radon and Radon Reduction Technology. Volume 1,* EPA-600/R-93-083a (NTIS PB93-196194), pp. 6-23 through 6-39, May 1993.

Gad89
Gadsby, K. J., L. M. Hubbard, D. T. Harrje, and D. C. Sanchez, "Rapid Diagnostics: Subslab and Wall Depressurization Systems for Control of Indoor Radon," in *Proceedings: The 1988 Symposium on Radon and Radon Reduction Technology. Volume 2,* EPA-600/9-89-006b (NTIS PB89-167498), pp. 3-69 through 3-85, March 1989.

Gad91
Gadsby, K. J., and D. T. Harrje, "Assessment Protocols: Durability of Performance of a Home Radon Reduction System - Sub-Slab Depressurization Systems," EPA/625/6-91/032, April 1991.

Gad92
Gadsby, K. J., Princeton University, Princeton, NJ, personal communication, March 20, 1992.

Gi90
Gilroy, D. G., and W. M. Kaschak, "Testing of Indoor Radon Reduction Techniques in 19 Maryland Houses," EPA-600/8-90-056 (NTIS PB90-244393), June 1990.

Ha89
Harrje, D. T., L. M. Hubbard, K. J. Gadsby, B. Bolker, and D. L. Bohac, "The Effect of Radon Mitigation Systems on Ventilation in Buildings," *ASHRAE Transactions,* 95 (Part 1):107-113, 1989.

Ha91
Harrje, D. T., K. J. Gadsby, and D. C. Sanchez, "Long Term Durability and Performance of Radon Mitigation Subslab Depressurization Systems," in *Proceedings: The 1990 International Symposium on Radon and Radon Reduction Technology. Volume 3,* EPA-600/9-91-026c (NTIS PB91-234468), pp. 7-15 through 7-32, July 1991.

He87
Henschel, D. B., and A. G. Scott, "Testing of Indoor Radon Reduction Techniques in Eastern Pennsylvania: An Update," in *Indoor Radon II: Proceedings of the Second APCA International Specialty Conference on Indoor Radon,* APCA Publication SP-60, pp. 146-159, Cherry Hill, NJ, April 1987.

He89
Henschel, D. B., and A. G. Scott, "Some Results from the Demonstration of Indoor Radon Reduction Measures in Block Basement Houses," *Environment International,* 15(1-6):265-270, 1989.

He91a
Henschel, D. B., A. G. Scott, A. Robertson, and W. O. Findlay, "Evaluation of Sub-Slab Ventilation for Indoor Radon Reduction in Slab-on-Grade Houses," in *Proceedings: The 1990 International Symposium on Radon and Radon Reduction Technology. Volume 2,* EPA-600/9-91-026b (NTIS PB91-234450), pp. 7-1 through 7-18, July 1991.

He91b
Henschel, D. B., "Cost Analysis of Soil Depressurization Techniques for Indoor Radon Reduction," *Indoor Air,* 1(3):337-351, 1991.

He91c
Henschel, D. B., "Parametric Analysis of the Installation and Operating Costs of Active Soil Depressurization Systems for Residential Radon Mitigation," EPA-600/8-91-200 (NTIS PB92-116037), October 1991.

He91d
Henschel, D. B., and A. G. Scott, "Causes of Elevated Post-Mitigation Radon Concentrations in Basement Houses Having Extremely High Pre-Mitigation Levels," in *Proceedings: The 1991 International Symposium on Radon and Radon Reduction Technology. Volume 1,* EPA-600/9-91-037a (NTIS PB92-115351), pp. 4-3 through 4-19, November 1991.

He92
Henschel, D. B., "Indoor Radon Reduction in Crawl-Space Houses: A Review of Alternative Approaches," *Indoor Air,* 2(4):272-287, 1992.

Hi92
Hintenlang, D. E., University of Florida, Gainesville, FL, personal communication, January 23, 1992.

Ho91
Hoornbeek, J., and J. Lago, "Private Sector Radon Mitigation Survey," in *Proceedings: The 1990 International Symposium on Radon and Radon Reduction Technology. Volume 3,* EPA-600/9-91-026c (NTIS PB91-234468), pp. 4-17 through 4-30, July 1991.

How92
Howell, T., Radon Reduction and Testing, Atlanta, GA, personal communication, February 5, 1992.

Hu89
Hubbard, L. M., B. Bolker, R. H. Socolow, D. Dickerhoff, and R. B. Mosley, "Radon Dynamics in a House Heated Alternately by Forced Air and by Electric Resistance," in *Proceedings: The 1988 Symposium on Radon and Radon Reduction Technology. Volume 1,* EPA-600/9-89-006a (NTIS PB89-167480), pp. 6-1 through 6-14, March 1989.

IL90
ILMASTI Electronics, Ltd., "IlmaRadon meter is the instrument for measurements of radon gas concentrations," Vantaa, Finland, 1990.

US EPA ARCHIVE DOCUMENT

Jo91
Jones, D. L., Radon Reduction and Testing, Atlanta, GA, personal communication, March 1991.

Ka89
Kaschak, W. M., D. G. Gilroy, R. H. Tracey, and D. B. Henschel, "Assessment of the Effectiveness of Radon-Resistant Features in New House Construction," in *Proceedings: The 1988 Symposium on Radon and Radon Reduction Technology. Volume 2,* EPA-600/9-89-006b (NTIS PB89-167498), pp. 4-91 through 4-103, March 1989.

Kl89
Kladder, D. L., Colorado Vintage Companies, Inc., Colorado Springs, CO, personal communication, June 1, 1989.

Kl92
Kladder, D. L., and S. R. Jelinek, Colorado Vintage Companies, Inc., Colorado Springs, CO, personal communication, March 30, 1992.

Kn90
Kneeland, C. E., J. P. Reese, and M. R. Watson, "Diagnostic and Mitigation Techniques Used in Radon Field Workshops," Paper No. 90-89.8, 83rd Annual Meeting of the Air & Waste Management Association, Pittsburgh, PA, June 1990.

Ma88
Matthews, T. G., C. S. Dudney, D. L. Wilson, R. J. Saultz, P. K. TerKonda, and R. B. Gammage, personal communication, September 1988.

Ma89a
Matthews, T. G., D. L. Wilson, P. K. TerKonda, R. J. Saultz, G. Goolsby, S. E. Burns, and J. W. Haas, "Radon Diagnostics: Subslab Communication and Permeability Measurements," in *Proceedings: The 1988 Symposium on Radon and Radon Reduction Technology. Volume 1,* EPA-600/9-89-006a (NTIS PB89-167480), pp. 6-45 through 6-66, March 1989.

Ma89b
Matthews, T. G., D. L. Wilson, R. J. Saultz, and C. S. Dudney, personal communication, May 1989.

Me92
Menetrez, M. Y., U. S. Environmental Protection Agency, Research Triangle Park, NC, personal communication, March 1992.

Mes90a
Messing, M., "Testing of Indoor Radon Reduction Techniques in Basement Houses Having Adjoining Wings," EPA-600/8-90-076 (NTIS PB91-125831), November 1990.

Mes90b
Messing, M., Infiltec Radon Control, Inc., Falls Church, VA, personal communication, April 25-26, 1990.

Mes90c
Messing, M., Infiltec Radon Control, Inc., Falls Church, VA, personal communication regarding follow-up alpha-track measurements in Maryland study houses, November 21, 1990.

Mes91
Messing, M., Infiltec Radon Control, Inc., Falls Church, VA, personal communication, February 14, 1991.

Mes92
Messing, M., Infiltec Radon Control, Inc., Falls Church, VA, personal communication, March 31, 1992.

Mi87
Michaels, L. D., T. Brennan, A. Viner, A. Mattes, and W. Turner, "Development and Demonstration of Indoor Radon Reduction Measures for 10 Homes in Clinton, New Jersey," EPA-600/8-87-027 (NTIS PB87-215356), July 1987.

Na85
Nazaroff, W. W., and S. M. Doyle, "Radon Entry into Houses Having a Crawl Space," *Health Physics,* 48(3):265-281, 1985.

Ne92
Nelson, G., The Energy Conservatory, Minneapolis, MN, personal communication, July 30, 1992.

NFGC88
National Fuel Gas Code, "Recommended Procedures for Safety Inspection of an Existing Appliance Installation," Appendix H, p. 2223.1-98, 1988.

Ni85
Nitschke, I. A., G. W. Traynor, J. B. Wadach, M. E. Clarkin, and W. A. Clarke, "Indoor Air Quality, Infiltration and Ventilation in Residential Buildings," Report 85-10, New York State Energy Research and Development Authority, Albany, NY, March 1985.

Ni89
Nitschke, I. A., "Radon Reduction and Radon Resistant Construction Demonstrations in New York," EPA-600/8-89-001 (NTIS PB89-151476), January 1989.

NYSEO91
New York State Energy Office, "Radon: A Diagnostic Field Guide for Professionals," Albany, NY, 1991.

Os89a
Osborne, M. C., "Resolving the Radon Problem in Clinton, New Jersey, Houses," *Environment International,* 15:281-287, 1989.

Os89b
Osborne, M. C., D. G. Moore, Jr., R. E. Southerlan, T. M. Brennan, and B. E. Pyle, "Radon Reduction in Crawl Space House," *J. Environ. Engineering,* 115(3):574-589, 1989.

US EPA ARCHIVE DOCUMENT

Pe90
Pelican Environmental Corp., "Pelican S-3 Blower and Pelican HPLF System," Framingham, MA, 1990.

Pr87
Prill, R. J., B. H. Turk, W. J. Fisk, D. T. Grimsrud, B. A. Moed, and R. G. Sextro, "Radon and Remedial Action in Spokane River Valley Homes. Volume 2: Appendices to LBL-23430," LBL-24638, Lawrence Berkeley Laboratory, Berkeley, CA, December 1987.

Pr89
Prill, R. J., W. J. Fisk, and B. H. Turk, "Monitoring and Evaluation of Radon Mitigation Systems Over a Two-Year Period," in *Proceedings: The 1988 Symposium on Radon and Radon Reduction Technology. Volume 1,* EPA-600/9-89-006a (NTIS PB89-167480), pp. 7-93 through 7-109, March 1989.

Py90
Pyle, B. E., and A. D. Williamson, "Radon Mitigation Studies: Nashville Demonstration," EPA-600/8-90-061 (NTIS PB90-257791), July 1990.

Py91
Pyle, B. E., and K. W. Leovic, "A Comparison of Radon Mitigation Options for Crawl-Space School Buildings," in *Proceedings: The 1991 International Symposium on Radon and Radon Reduction Technology. Volume 2,* EPA-600/9-91-037b (NTIS PB92-115369), pp. 10-73 through 10-84, November 1991.

Py92
Pyle, B. E., Southern Research Institute, Birmingham, AL, personal communication, April 14, 1992.

Ra92
RadonAway, Inc., "Catalog: Fans and More for Radon Professionals," Andover, MA, 1992.

Ro90
Robertson, A., American ATCON, Inc., Toronto, Ontario, personal communication regarding April 1989-90 annual alpha-track detector measurements in radon mitigation study houses in Ohio, September 1990.

Roe91
Roessler, C. E., R. Morato, D. E. Hintenlang, and R. A. Furman, personal communication, 1991.

Ru91
Ruppersberger, J. S., "The Use of Coatings and Block Specification to Reduce Radon Inflow Through Block Basement Walls," in *Proceedings: The 1990 International Symposium on Radon and Radon Reduction Technology. Volume 2,* EPA-600/9-91-026b (NTIS PB91-234450), pp. 8-51 through 8-59, July 1991.

Sa84
Sachs, H. M., and T. L. Hernandez, "Residential Radon Control by Subslab Ventilation," presented at the 77th Annual Meeting of the Air Pollution Control Association, San Francisco, CA, June 24-29, 1984.

Sau89
Saum, D. W., and M. Messing, "Guaranteed Radon Remediation Through Simplified Diagnostics," in *Proceedings of the Radon Diagnostics Workshop, April 13-14, 1987,* EPA-600/9-89-057 (NTIS PB89-207898), June 1989.

Sau91a
Saum, D. W, and M. C. Osborne, "Radon Mitigation Performance of Passive Stacks in Residential New Construction," in *Proceedings: The 1990 International Symposium on Radon and Radon Reduction Technology. Volume 2,* EPA-600/9-91-026b (NTIS PB91-234450), pp. 8-15 through 8-28, July 1991.

Sau91b
Saum, D. W., "Mini Fan for SSD Radon Mitigation in New Construction," in *Proceedings: The 1991 International Symposium on Radon and Radon Reduction Technology. Volume 2,* EPA-600/9-91-037b (NTIS PB92-115369), pp. 8-45 through 8-55, November 1991.

Sau92
Saum, D. W., Infiltec, Falls Church, VA, personal communication, May 20, 1992.

Sc88
Scott, A. G., A. Robertson, and W. O. Findlay, "Installation and Testing of Indoor Radon Reduction Techniques in 40 Eastern Pennsylvania Houses," EPA-600/8-88-002 (NTIS PB88-156617), January 1988.

Sc89
Scott, A. G., and A. Robertson, "Follow-Up Alpha-Track Monitoring in 40 Eastern Pennsylvania Houses with Indoor Radon Reduction Systems (Winter 1988-89)," EPA-600/8-89-083 (NTIS PB90-134172), October 1989.

Sc90a
Scott, A. G., American ATCON, Inc., Wilmington, DE, personal communication, August 1990.

Sc90b
Scott, A. G., and A. Robertson, "Follow-Up Annual Alpha-Track Monitoring in 40 Eastern Pennsylvania Houses with Indoor Radon Reduction Systems (December 1988-December 1989)," EPA-600/8-90-081 (NTIS PB91-127779), November 1990.

Sc92
Scott, A. G., American ATCON, Inc., Wilmington, DE, personal communication, November 24, 1992.

Sh90
Shearer, D. J., Professional House Doctors, Inc., Des Moines, IA, personal communication, April 25, 1990.

Sh91
Shearer, D. J., Professional House Doctors, Inc., Des Moines, IA, personal communication, February 15, 1991.

Sh92
Shearer, D. J., Professional House Doctors, Inc., Des Moines, IA, personal communication, February 6, 1992.

She80
Sherman, M. H., and D. T. Grimsrud, "Measurement of Infiltration Using Fan Pressurization and Weather Data," in *Proceedings of First Air Infiltration Centre Conference on Air Infiltration Instrumentation and Measuring Techniques,* pp. 277-322, Air Infiltration Centre, Berkshire, UK, 1980.

She86
Sherman, M. H., "Infiltration Degree Days: A Statistic for Quantifying Infiltration-Related Climate," *ASHRAE Transactions,* 92 (Part 2A):161-181, 1986.

Si91
Simon, R. F., R. F. Simon Company, Inc., Barto, PA, personal communication, April 4, 1991.

St90
Staley, T. L., Radon Screening Service, Inc., Englewood, CO, personal communication, April 25, 1990.

Str91
Strom, D. J., W. D. Ulicny, J. B. Mallon, Jr., and R. W. Benchoff, "A Cost-Effectiveness Comparison of Private-Sector Radon Remediation with Traditional Radiation Protection Activities," in *Proceedings: The 1990 International Symposium on Radon and Radon Reduction Technology. Volume 2,* EPA-600/9-91-026b (NTIS PB91-234450), pp. 7-73 through 7-82, July 1991.

Ta85
Tappan, J. T., "Radon Mitigation Remedial Action Demonstration at the Watras Residence," report to Philadelphia Electric Co. by Arix Corp., June 1985.

TEC87
The Energy Conservatory, "Minneapolis Blower Door Operation Manual, Model 3," Minneapolis, MN, 1987.

TEC92
The Energy Conservatory, "Combustion Safety Test Procedure," Minneapolis, MN, 1992.

Tu87
Turk, B. H., R. J. Prill, W. J. Fisk, D. T. Grimsrud, B. A. Moed, and R. G. Sextro, "Radon and Remedial Action in Spokane River Valley Homes. Volume 1: Experimental Design and Data Analysis," LBL-23430, Lawrence Berkeley Laboratory, Berkeley, CA, December 1987.

Tu88a
Turk, B. H., J. Harrison, R. G. Sextro, L. M. Hubbard, K. J. Gadsby, T. G. Matthews, C. S. Dudney, and D. C. Sanchez, "Evaluation of Radon Reduction Techniques in Fourteen Basement Houses: Preliminary Results," Paper No. 88-107.2, 81st Annual Meeting of the Air Pollution Control Association, Dallas, TX, 1988.

Tu88b
Turk, B. H., J. Harrison, R. J. Prill, and R. G. Sextro, "Preliminary Diagnostic Procedures for Radon Control," EPA-600/8-88-084 (NTIS PB88-225115), June 1988.

Tu89
Turk, B. H., J. Harrison, and R. G. Sextro, "Performance of Radon Control Systems," LBL-27520, Lawrence Berkeley Laboratory, Berkeley, CA, June 1989.

Tu90
Turk, B. H., J. Harrison, R. J. Prill, and R. G. Sextro, "Developing Soil Gas and ^{222}Rn Entry Potentials for Substructure Surfaces and Assessing ^{222}Rn Control Diagnostic Techniques," *Health Physics,* 59:405-419, 1990.

Tu91a
Turk, B. H., J. Harrison, R. J. Prill, and R. G. Sextro, "Soil Gas and Radon Entry Potentials for Substructure Surfaces," in *Proceedings: The 1990 International Symposium on Radon and Radon Reduction Technology. Volume 2,* EPA-600/9-91-026b (NTIS PB91-234450), pp. 5-33 through 5-51, July 1991.

Tu91b
Turk, B. H., D. Grumm, Y. Li, S. D. Schery, and D. B. Henschel, "Soil Gas and Radon Entry Potentials for Slab-on-Grade Houses," in *Proceedings: The 1991 International Symposium on Radon and Radon Reduction Technology. Volume 1,* EPA-600/9-91-037a (NTIS PB92-115351), pp. 5-53 through 5-67, November 1991.

Tu91c
Turk, B. H., Mountain West Technical Associates, Santa Fe, NM, personal communication, April 3, 1991.

Tu92
Turk, B. H., Mountain West Technical Associates, Santa Fe, NM, personal communication, March 31, 1992.

Vi79
Vivyurka, A., "Assessment of Subfloor Ventilation Systems," presented at the Workshop on Radon and Radon Daughters in Urban Communities Associated with Uranium Mining and Processing, Bancroft, Ontario, March 12-14, 1979.

We90
West, D., Insul-Tech, Inc., Westerville, OH, personal communication, April 25, 1990.

Wi90
Wiggers, K. D., American Radon Services, Ltd., Ames, IA, personal communication, October 1990.

Wi91
Wiggers, K. D., American Radon Services, Ltd., Ames, IA, personal communication, September 1991.

Wi92
Wiggers, K. D., American Radon Services, Ltd., Ames, IA, personal communication, December 1992.

Zu92
Zucchino, A. P., RadonAway, Inc., Andover, MA, personal communication, December 11, 1992.

US EPA ARCHIVE DOCUMENT

Section 15
Sources of Information

The first point of contact for information concerning indoor radon and radon reduction measures should be the appropriate state agency. Table 7 lists the appropriate agency to contact for each of the states.

If further information is desired, additional assistance and contacts can be provided by the EPA Regional Office for the region that includes your state. Table 8 lists the address and telephone number of the radiation staff for each of EPA's 10 regional offices. The table also includes the appropriate regional office to contact for each state.

US EPA ARCHIVE DOCUMENT

Table 7. Radon Contacts for Individual States

Alabama
Radiological Health Branch
Alabama Department of Public Health
434 Monroe St., Room 510
Montgomery, AL 36130-1701
(205) 261-5315
1-800-582-1866 (in state)

Alaska
Alaska Department of Health and Social Services
Division of Public Health
P. O. Box H
Juneau, AK 99811-0610
(907) 465-3019

Arizona
Arizona Radiation Regulatory Agency
4814 South 40th Street
Phoenix, AZ 85040
(602) 255-4845

Arkansas
Division of Radiation Control and Emergency Management
Arkansas Department of Health
4815 Markham Street
Little Rock, AR 72205-3867
(501) 661-2301

California
California Department of Health Services
601 North 7th Street
Sacramento, CA 94234-7320
(916) 324-2208

Colorado
Radiation Control Division
Colorado Department of Health
4210 East 11th Avenue
Denver, CO 80220
(303) 331-8480

Connecticut
Radon Program
Connecticut Department of Health Services
150 Washington Street
Hartford, CT 06106-4474
(203) 566-3122

Delaware
Division of Public Health
Delaware Bureau of Environmental Health
P. O. Box 637
Dover, DE 19901
(302) 739-3787 or -3839
1-800-554-4636 (in state)

District of Columbia
DC Department of Consumer and Regulatory Affairs
614 H Street, NW, Room 1014
Washington, DC 20001
(202) 727-7218

Florida
Office of Radiation Control
Florida Department of Health and Rehabilitative Services
1317 Winewood Boulevard
Tallahassee, FL 32399-0700
(904) 488-1525
1-800-543-8279 (consumer inquiries only)

Georgia
Georgia Department of Human Resources
Environmental Protection Division
878 Peachtree Street, Room 100
Atlanta, GA 30309
(404) 894-6644
1-800-745-0037 (in state)

Guam
Guam Environmental Protection Agency
IT and E. Harmon Plaza D-107
130 Rojas Street
Harmon, Guam 96911
(671) 646-8863

Hawaii
Environmental Protection and Health Services Division
Hawaii Department of Health
591 Ala Moana Boulevard
Honolulu, HI 96813-2498
(808) 586-4700

Idaho
Bureau of Preventative Medicine
Idaho Department of Health and Welfare
450 West State Street
Boise, ID 83720
(208) 334-6584

Illinois
Illinois Department of Nuclear Safety
1301 Knotts Street
Springfield, IL 62703
(217) 786-7126
1-800-325-1245 (in state)

Indiana
Radiological Health Section
Indiana State Board of Health
1330 West Michigan Street
P. O. Box 1964
Indianapolis, IN 46206-1964
(317) 633-0150
1-800-272-9723 (in state)

Iowa
Bureau of Radiological Health
Iowa Department of Public Health
Lucas State Office Building
Des Moines, IA 50319-0075
(515) 281-7781
1-800-383-5992 (in state)

Kansas
Radiation Control Program
Environmental Health Services
Kansas Department of Health and Environment
6th floor, Mills Building
109 SW 9th Street
Topeka, KS 66612
(913) 296-1560

Kentucky
Radiation Control Branch
Division of Community Safety
Department of Health Services
275 East Main Street
Frankfort, KY 40621
(502) 564-3700

(continued)

US EPA ARCHIVE DOCUMENT

Table 7. (Continued)

Louisiana
Radiation Protection Division
Louisiana Department of Environmental Quality
P. O. Box 14690
Baton Rouge, LA 70898-4690
(504) 925-4518

Maine
Division of Health Engineering
Maine Department of Human Services
State House, Station 10
Augusta, ME 04333
(207) 289-5692

Maryland
Center for Radiological Health
Maryland Department of the Environment
2500 Broening Highway
Baltimore, MD 21224
(301) 631-3300
1-800-872-3666 (in state)

Massachusetts
Radiation Control Program
Massachusetts Department of Public Health
150 Tremont Street, 11th floor
Boston, MA 02111
(617) 727-6214

Michigan
Division of Radiological Health
Bureau of Environmental and Occupational Health
Michigan Department of Public Health
3423 Logan/Martin Luther King, Jr. Blvd.
P. O. Box 30195
Lansing, MI 48909
(517) 335-8190

Minnesota
Indoor Air Quality Unit
Minnesota Department of Health
925 Delaware Street, SE
Minneapolis, MN 55459-0040
(612) 627-5012
1-800-798-9050 (in state)

Mississippi
Division of Radiological Health
Mississippi Department of Health
P. O. Box 1700
Jackson, MS 39215-1700
(601) 354-6657
1-800-626-7739 (in state)

Missouri
Bureau of Radiological Health
Missouri Department of Health
1730 E. Elm
P. O. Box 570
Jefferson City, MO 65102
(314) 751-6083
1-800-669-7236 (in state)

Montana
Occupational Health Bureau
Montana Department of Health and Environmental Sciences
Cogswell Building A113
Helena, MT 59620
(406) 444-3671

Nebraska
Division of Radiological Health
Nebraska Department of Health
301 Centennial Mall, South
P. O. Box 95007
Lincoln, NE 68509
(402) 471-2168
1-800-334-9491 (in state)

Nevada
Radiological Health Section
Nevada Department of Human Resources
505 East King Street, Room 203
Carson City, NV 89710
(702) 687-5394

New Hampshire
Bureau of Radiological Health
New Hampshire Division of Public Health Services
Health and Welfare Building
Six Hazen Drive
Concord, NH 03301-6527
(603) 271-4674

New Jersey
Bureau of Environmental Radiation
New Jersey Department of Environmental Protection and Energy
CN-415
Trenton, NJ 08625-0145
(609) 987-6389
1-800-648-0394 (in state)

New Mexico
Radiation Licensing and Registration Section
New Mexico Environmental Improvement Division
1190 St. Francis Drive
Santa Fe, NM 87503
(505) 827-2948

New York
Bureau of Environmental Radiation Protection
New York State Health Department
Two University Place
Albany, NY 12202
(518) 458-6461
1-800-458-1158 (in state)

North Carolina
Radiation Protection Division
North Carolina Department of Environment, Health and Natural Resources
P. O. Box 27687
Raleigh, NC 27611-7687
(919) 571-4141

North Dakota
Division of Environmental Engineering
North Dakota Department of Health
1200 Missouri Avenue, Room 304
P. O. Box 5520
Bismarck, ND 58502-5520
(701) 224-2348

Ohio
Radiological Health Program
Ohio Department of Health
246 North High Street
P. O. Box 118
Columbus, OH 43266-0118
(614) 644-2727
1-800-523-4439 (in state)

(continued)

Table 7. (Continued)

Oklahoma
Radiation Protection Division
Oklahoma State Department of Health
P. O. Box 53551
Oklahoma City, OK 73152
(405) 271-5221

Oregon
Health Division
Oregon Department of Human Resources
1400 S.W. 5th Avenue
Portland, OR 97201
(503) 229-5797

Pennsylvania
Bureau of Radiation Protection
Pennsylvania Department of Environmental Resources
200 North Third Street
P. O. Box 2063
Harrisburg, PA 17120
(717) 787-2163 or -2480
1-800-237-2366 (in state)

Puerto Rico
Puerto Rico Radiological Health Division
G.P.O. Call Box 70184
Rio Pierdras, PR 00936
(809) 767-3563

Rhode Island
Division of Occupational Health and Radiation
Rhode Island Department of Health
205 Cannon Building
Davis Street
Providence, RI 02908
(401) 277-2438

South Carolina
Bureau of Radiological Health
South Carolina Department of Health and Environmental Control
2600 Bull Street
Columbia, SC 29201
(803) 734-4700 or -4631
1-800-768-0362 (in state)

South Dakota
Division of Environmental Regulation
South Dakota Department of Water and Natural Resources
Joe Foss Building, Room 217
523 E. Capitol
Pierre, SD 57501-3181
(605) 773-3153

Tennessee
Division of Air Pollution Control
Bureau of Environmental Health
Tennessee Department of Environment and Conservation
Customs House, 4th floor
701 Broadway
Nashville, TN 37243-1531
(615) 741-4634
1-800-232-1139 (in state)

Texas
Bureau of Radiation Control
Texas Department of Health
1100 West 49th Street
Austin, TX 78756-3189
(512) 835-7000

Utah
Bureau of Radiation Control
Utah State Department of Health
288 North, 1460 West
P. O. Box 16690
Salt Lake City, UT 84116-0690
(801) 538-6734

Vermont
Occupational and Radiological Health Division
Vermont Department of Health
10 Baldwin Street
Montpelier, VT 05602
(802) 828-2886

Virginia
Bureau of Radiological Health
Department of Health
1500 E. Main Street, Room 104A
P. O. Box 2448, Main Street Station
Richmond, VA 23218
(804) 786-5932
1-800-468-0138 (in state)

Washington
Office of Radiation Protection
Washington Department of Health
AirDustrial Building 5, LE-13
Olympia, WA 98504
(206) 586-3303
1-800-323-9727 (in state)

West Virginia
Radiological Health Program
Industrial Hygiene Division
West Virginia Department of Health
151 11th Avenue
South Charleston, WV 25303
(304) 348-3426 or -3427
1-800-922-1255 (in state)

Wisconsin
Division of Health
Radiation Protection Unit
Wisconsin Department of Health and Social Services
P. O. Box 309
Madison, WI 53701-0309
(608) 267-4795

Wyoming
Environmental Health
Wyoming Department of Health and Social Services
Hathway Building, 4th Floor
Cheyenne, WY 82002-0710
(307) 777-6015

US EPA ARCHIVE DOCUMENT

Table 8. Radiation Contacts for EPA Regional Offices

Address and Telephone	*States in EPA Region*
Region 1 U. S. Environmental Protection Agency John F. Kennedy Federal Building Boston, MA 02203 (617) 565-4502	Connecticut, Maine, Massachusetts, New Hampshire, Rhode Island, Vermont
Region 2 2AWM:RAD U. S. Environmental Protection Agency Jacob K. Javits Federal Building 26 Federal Plaza New York, NY 10278 (212) 264-4110	New Jersey, New York, Puerto Rico, Virgin Islands
Region 3 3AT12 U. S. Environmental Protection Agency 841 Chestnut Building Philadelphia, PA 19107 (215) 597-8320	Delaware, District of Columbia, Maryland, Pennsylvania, Virginia, West Virginia
Region 4 U. S. Environmental Protection Agency 345 Courtland Street, N.E. Atlanta, GA 30365 (404) 347-3907	Alabama, Florida, Georgia, Kentucky, Mississippi, North Carolina, South Carolina, Tennessee
Region 5 AT-18J U. S. Environmental Protection Agency 77 West Jackson Blvd. Chicago, IL 60604-3590 (312) 886-6175	Illinois, Indiana, Michigan, Minnesota, Ohio, Wisconsin
Region 6 6T-ET U. S. Environmental Protection Agency 1445 Ross Avenue, Suite 1200 Dallas, TX 75202-2733 (214) 655-7223	Arkansas, Louisiana, New Mexico, Oklahoma, Texas
Region 7 U. S. Environmental Protection Agency 726 Minnesota Avenue Kansas City, KS 66101 (913) 551-7020	Iowa, Kansas, Missouri, Nebraska
Region 8 8AT-RP U. S. Environmental Protection Agency 999 18th Street, Suite 500 Denver, CO 80202-2405 (303) 293-1709	Colorado, Montana, North Dakota, South Dakota, Utah, Wyoming
Region 9 A-1-1 U. S. Environmental Protection Agency 75 Hawthorne Street San Francisco, CA 94105 (415) 744-1045	American Samoa, Arizona, California, Guam, Hawaii, Nevada
Region 10 AT-082 U. S. Environmental Protection Agency 1200 Sixth Avenue Seattle, WA 98101 (206) 553-7299	Alaska, Idaho, Oregon, Washington

Correspondence should be addressed to the EPA Radiation Program Manager at each address indicated.

(continued)

US EPA ARCHIVE DOCUMENT

Table 8. (Continued)

	EPA Region		*EPA Region*
Alabama	4	Missouri	7
Alaska	10	Montana	8
Arizona	9	Nebraska	7
Arkansas	6	Nevada	9
California	9	New Hampshire	1
Colorado	8	New Jersey	2
Connecticut	1	New Mexico	6
Delaware	3	New York	2
District of Columbia	3	North Carolina	4
Florida	4	North Dakota	8
Georgia	4	Ohio	5
Hawaii	9	Oklahoma	6
Idaho	10	Oregon	10
Illinois	5	Pennsylvania	3
Indiana	5	Rhode Island	1
Iowa	7	South Carolina	4
Kansas	7	South Dakota	8
Kentucky	4	Tennessee	4
Louisiana	6	Texas	6
Maine	1	Utah	8
Maryland	3	Vermont	1
Massachusetts	1	Virginia	3
Michigan	5	Washington	10
Minnesota	5	West Virginia	3
Mississippi	4	Wisconsin	5
		Wyoming	8

☆ U.S. GOVERNMENT PRINTING OFFICE: 1994 — 5 5 0 -0 0 1 /8 0 3 8 5

US EPA ARCHIVE DOCUMENT