US EPA ARCHIVE DOCUMENT

US EPA ARCHIVE DOCUMENT

MENOMINEE RIVER SEDIMENT REMOVAL PROJECT ADJACENT TO TYCO FIRE PRODUCTS LP FACILITY, SUPPLEMENT 1 - VERTICAL BARRIER WALL SHEET PILE SUPPORT

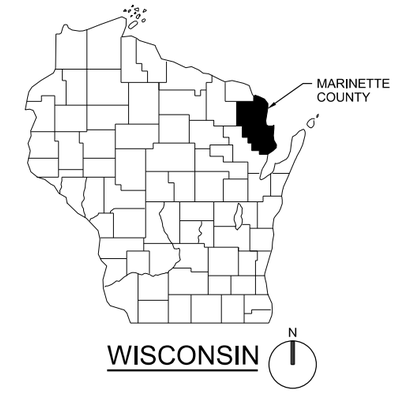

MARINETTE, WISCONSIN
AUGUST 2012

VICINITY MAP
NTS

AERIAL VIEW

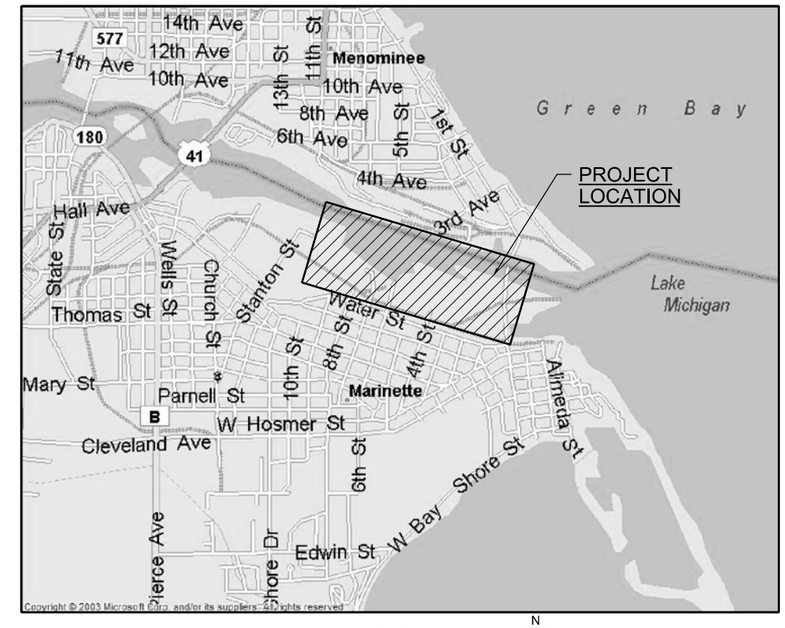

LOCATION MAP
NTS

PREPARED FOR

TYCO FIRE PRODUCTS LP
ONE STANTON STREET
MARINETTE, WI 54143-2542

CH2MHILL

FILENAME: 021-G-0001_438465.dgn PLOT DATE: 2012\08\03 PLOT TIME: 12:06:35 PM

US EPA ARCHIVE DOCUMENT

INDEX OF DRAWINGS

SHEET NO.	DWG NO.	DESCRIPTION
GENERAL		
1	G-1	COVER AND VICINITY / LOCATION MAPS
2	G-2	INDEX OF DRAWINGS, ABBREVIATIONS, CIVIL AND DESIGNATION LEGENDS
CIVIL		
3	C-1	EXISTING SITE PLAN
4	C-2	TEMPORARY FACILITIES AND EROSION CONTROL PLAN
5	C-3	DREDGE PLAN
6	C-4	SHEET PILE KEY PLAN
7	C-5	SHEET PILE PLAN AND PROFILE STA 10+00 TO 14+39
8	C-6	SHEET PILE PLAN AND PROFILE STA 14+39 TO 16+57
9	C-7	SHEET PILE PLAN AND PROFILE STA 16+57 TO 22+00
10	C-8	SHEET PILE PLAN AND PROFILE STA 22+00 TO 25+00
11	C-9	SHEET PILE PLAN AND PROFILE STA 25+00 TO 28+27
12	C-10	BACKFILL PLAN AND SECTION
13	C-11	STANDARD DETAILS
14	C-12	SHEET PILE DETAILS
15	C-13	SHEET PILE DETAILS AND SCHEDULES

ABBREVIATIONS

@	AT
AB	ANCHOR BOLT
ABDN	ABANDONED
AD	AREA DRAIN
ADDL	ADDITIONAL
ADJ	ADJACENT
AHR	ANCHOR
ALTN	ALTERNATE
APPROX	APPROXIMATE
APVD	APPROVED
AVG	AVERAGE
BETW	BETWEEN
BF	BOTTOM FACE
BLDG	BUILDING
BM	BEAM
BOT	BOTTOM
BRG	BEARING
CHEM	CHEMICAL
CHKD	CHECKERED
CFM	CUBIC FEET PER MINUTE
CJ	CONSTRUCTION JOINT
CI	CAST IRON
CL	CENTER LINE
CLDI	CEMENT LINED DUCTILE IRON
CLP	CLAY PIPE
CLR	CLEAR
CMP	CORRUGATED METAL PIPE
CMU	CONCRETE MASONRY UNITS
COL	COLUMN
CONC	CONCRETE
CONN	CONNECTION
CONST	CONSTRUCTION
CONT	CONTINUOUS
COR	CORNER
CP	CONCRETE PIPE
C TO C	CENTER TO CENTER
CTR	CENTER
CTRD	CENTERED
CU FT	CUBIC FEET
C/W	COMPLETE WITH
DBL	DOUBLE
DEG °	DEGREE
DET	DETAIL
DIA	DIAMETER
DIAG	DIAGONAL
DIM	DIMENSION
DIP	DUCTILE IRON PIPE
DIR	DIRECTION
DN	DOWN
DWG	DRAWING
DWL	DOWEL
E	EAST
E	EXTERNAL
EA	EACH
ECC	ECCENTRIC
EF	EACH FACE
EL	ELEVATION
ELEC	ELECTRICAL
EQL	EQUAL
EQL SP	EQUALLY SPACED
EQPT	EQUIPMENT
EW	EACH WAY
EXP JT	EXPANSION JOINT
EXT	EXTERIOR
EXST	EXISTING
FAB	FABRICATION
FC	FLEXIBLE CONNECTION
FCTY, FACT.	FACTORY
FEXT	FIRE EXTINGUISHER
FDN	FOUNDATION
FLEX	FLEXIBLE
FLR	FLOOR
FNSH	FINISH
G	GAS
GA	GAUGE
GAL	GALLON
GALV	GALVANIZED
GALVS	GALVANIZED STEEL
GPD	GALLONS PER DAY
GPM	GALLONS PER MINUTE
GVL	GRAVEL
GW	GROUNDWATER
HD	HUB DRAIN
HDNR	HARDENER
HDPE	HIGH DENSITY POLYETHYLENE
HDR	HEADER
HGT	HEIGHT
HORIZ	HORIZONTAL
HR	HOUR
HV	HOSE VALVE
I&C	INSTRUMENTATION & CONTROL
ID	INSIDE DIAMETER
IF	INSIDE FACE
INFL	INFLUENT
INSTL	INSTALL
INVT	INVERT
JT	JOINT
L	LENGTH OF CURVE
LB	POUNDS
LB/D	POUNDS PER DAY
LG	LONG
LLV	LONG LEG VERTICAL
LONG	LONGITUDINAL
LR	LONG RADIUS
LT	LIGHT
MATL	MATERIAL
MAX	MAXIMUM
MB	MACHINE BOLT
MECH	MECHANICAL
MFR	MANUFACTURER
MGD	MILLION GALLONS PER DAY
MH	MANHOLE
MIN	MINIMUM
MISC	MISCELLANEOUS
MON	MONUMENT
MTG	MOUNTING
MTL	METAL
N	NORTH
NIC	NOT IN CONTRACT
NO.	NUMBER
NOM	NOMINAL
NORM	NORMAL
NTS	NOT TO SCALE
OC	ON CENTER
OD	OUTSIDE DIAMETER
OF	OUTSIDE FACE
O/H	OVERHEAD
O TO O	OUT TO OUT
OPNG	OPENING
OPP	OPPOSITE
PE	POLYETHYLENE
P&ID	PROCESS AND INSTRUMENTATION DIAGRAM
PL	PLATE
PR	PAIR
PRCST	PRECAST
PSF	POUNDS PER SQUARE FOOT
PSI	POUNDS PER SQUARE INCH
PVC	POLYVINYL CHLORIDE OR POINT OF VERTICAL CURVATURE
PVMT	PAVEMENT
QDRNT	QUADRANT
R OR RAD	RADIUS
RC	REINFORCED CONCRETE
RCP	REINFORCED CONCRETE PIPE
RDCR	REDUCER
REHAB	REHABILITATION/REHABILITATED
REINF	REINFORCE
REQD	REQUIRED
RM	ROOM
RO	ROUGH OPENING
RR	REDUCER
RST	REINFORCING STEEL
S	SOUTH
SCHED	SCHEDULE
SCM	SEMI-CONSOLIDATED MATERIAL
SECT	SECTION
SH	SHEET
SHTG	SHEETING
SIM	SIMILAR
SPECD	SPECIFIED
SPECS	SPECIFICATIONS
SPG	SPACING
SQ	SQUARE
SST, SS	STAINLESS STEEL
STA	STATION
STD	STANDARD
STIF	STIFFENER
STOR	STORAGE
STR	STRAIGHT
STRUCT	STRUCTURAL
STL	STEEL
SYMM	SYMMETRICAL
T&B	TOP AND BOTTOM
TC	TOP OF CONCRETE
TEMP	TEMPERED
TF	TOP FACE
THK	THICK
THRD	THREADED
T.O.	TOP OF
TPD	TONS PER DAY
TRANSV	TRANSVERSE
TSS	TOTAL SUSPENDED SOLIDS
TST	TOP OF STEEL
TW	TOP OF WALL
TYP	TYPICAL
UON	UNLESS OTHERWISE NOTED
VBW	VERTICAL BARRIER WALL
VERT	VERTICAL
VCP	VITRIFIED CLAY PIPE
VD	VOLUME DAMPER
VOC	VOLATILE ORGANIC COMPOUND
W	WEST
W/	WITH
WD	WOOD
WK	WEEK
WS	WATER STOP OR WATER SURFACE
WWM	WELDED WIRE MESH OR WELDED STEEL
XFMR	TRANSFORMER
YR	YEAR

CIVIL LEGEND

EXISTING	THIS CONTRACT	
× 157.7	⊗ 158.5	SPOT ELEVATION
155	155	CONTOUR LINE
	3:1	EMBANKMENT AND SLOPE
		DRAINAGEWAY OR DITCH
	CB OR CB	CATCH BASIN OR INLET
		TRENCH DRAIN
	OR	SIGN
	D OR S	MANHOLE
E	E	ELECTRICAL MANHOLE
H	H	ELECTRIC HANDHOLE
		POST OR GUARD POST
		FIRE HYDRANT
		UTILITY POLE
		LIGHT POLE
	BM	BENCH MARK
		SURVEY CONTROL POINT OR POINT OF INTERSECTION
		BRUSH/TREE LINE
		TREE
		PROPERTY LINE
		CENTER LINE, BUILDING, ROAD, ETC.
		STAGING OR WORK AREA LIMITS
	N 1000.00 E 1000.00	STRUCTURE, BUILDING OR FACILITY LOCATION POINT - COORDINATES
	B-1	BORING LOCATION AND NUMBER
	TP-2	TEST PIT LOCATION AND NUMBER
	P-3	PIEZOMETER LOCATION AND NUMBER
OR	OR	DEMOLITION
OR	OR	STRUCTURE, BUILDING OR FACILITY
		ASPHALT CONCRETE PAVEMENT
		GRAVEL SURFACING
		CONCRETE PAVEMENT
		CURB
		SINGLE SWING GATE
		DOUBLE SWING GATE
		SLIDING GATE
		CHAIN LINK FENCE
		CULVERT

EROSION CONTROL LEGEND

SYMBOL	COVER PRACTICES
TS	TEMPORARY SEEDING
MU	MULCHING AND MATTING
CPC	CLEAR PLASTIC COVERING
PS	PERMANENT SEEDING AND PLANTING
	CONSTRUCTION ENTRANCE
IS	INTERCEPTOR SWALE
	CHECK DAMS
	OUTLET PROTECTION / RIPRAP
	SEDIMENT FENCE
	STRAW BALE BARRIER (BIOFILTER)
	SEDIMENT TRAP (OR SUMP)
	FLOW DIRECTION ARROW

SECTION / DETAIL DESIGNATIONS

1 / C-1 — SHEET/DRAWING NUMBER WHERE SHOWN — ON DRAWING WHERE SECTION OR DETAIL IS TAKEN:

A — SECTION — SCALE — ON DRAWING WHERE SECTION IS SHOWN.

2 — DETAIL — SCALE — ON DRAWING WHERE DETAIL IS SHOWN.

3231-410 — STANDARD DETAIL CALLOUT ON DRAWING.

3231-410 — STANDARD DETAIL ON DRAWING WHERE DETAIL IS SHOWN.

DRAWING TITLE — SCALE — ON DRAWING WHERE ONLY A TITLE IS REQUIRED WITH NO REFERENCE (eg: ELEVATIONS)

A / S-2 — SECTION CALLOUT WHERE SECTION IS ON THE SAME SHEET AND CUT EXTENDS TO A FIXED LIMIT

A / S-4 — SECTION CALLOUT WHERE SECTION IS ON ANOTHER SHEET AND CUT EXTENDS THROUGHOUT ENTIRE SHEET

1 — KEYED NOTES

DRAWING NUMBER DESIGNATION

C-2
- C — INDICATES DRAWING NUMBER
- 2 — INDICATES DISCIPLINE(S) OR CATEGORY:
  - C — CIVIL
  - G — GENERAL

GENERAL CIVIL NOTES:

1. THIS SURVEY IS REFERENCED HORIZONTALLY TO NORTH AMERICAN DATUM OF 1983 (NAD83) AND PROJECTED ON THE WISCONSIN STATE PLANE COORDINATE SYSTEM (CENTRAL ZONE) AND VERTICALLY TO THE NORTH AMERICAN VERTICAL DATUM OF 1988 (NAVD88).
2. NORTH ARROW AS SHOWN INDICATES GRID NORTH REFERENCED TO NAD83 AND PROJECTED ON THE WISCONSIN STATE PLANE COORDINATE SYSTEM (CENTRAL ZONE).
3. THE REFERENCE HORIZONTAL AND VERTICAL CONTROL STATION IS A NATIONAL GEODETIC SURVEY MONUMENT STAMPED "35 A" (PID DI7509) ESTABLISHED BY GPS OBSERVATIONS AND ADJUSTED BY THE NATIONAL GEODETIC SURVEY IN OCTOBER 2007. ELEVATION = 585.12 FEET.
4. LOCATION OF SPOT ELEVATION IS INDICATED BY THE TICK "=" MARK LOCATED ADJACENT TO THE ELEVATION.
5. ELEVATIONS AND CONTOURS SHOWN REFERENCE NAVD88 - GEOID09.
6. CONTOURS SHOWN HEREON GENERATED FROM A DIGITAL TERRAIN MODEL UTILIZING AUTODESK LAND DESKTOP SURVEYING AND ENGINEERING SOFTWARE.
7. THE INFORMATION SHOWN HEREON IS BASED ON AN INSTRUMENT SURVEY COMPLETED ON MAY 20, 2010 UTILIZING A SINGLE BEAM DUAL FREQUENCY ECHO SOUNDER (SBES) HYDROGRAPHIC SURVEYING SYSTEM AND CONVENTIONAL SURVEYING TECHNIQUES.
8. THE DEBRIS AREA CONSISTS OF REMNANT PYLONS AND TIMBERS WITH VARYING HEIGHTS.
9. THE STAFF GAUGES ARE SET SUCH THAT THE WATER SURFACE ELEVATION IS DETERMINED BY ADDING 570.0 TO THE STAFF GAUGE READING. (E.G. READING OF 8.5 ON THE STAFF GAUGE CORRESPONDS TO A WATER SURFACE ELEVATION OF 578.5).
10. THE AVERAGE WATER SURFACE ELEVATION OF THE MENOMONEE RIVER THROUGHOUT THE DURATION OF THE FIELD SURVEY WAS 578.5 FEET.

GENERAL NOTES:

1. * SYMBOL - ONLY WHERE REQUIRED FOR CLARITY.
2. EXISTING STRUCTURES AND FACILITIES ARE SHOWN AS SCREENED BACKGROUND. NEW STRUCTURES ARE SHOWN IN HEAVY LINE WEIGHTS.
3. THIS IS A STANDARD LEGEND SHEET. SOME SYMBOLS MAY APPEAR ON THIS SHEET AND NOT ON THE PLANS. CONTACT THE ENGINEER FOR ABBREVIATIONS NOT LISTED.
4. DRAWINGS ARE BASED ON INFORMATION FROM TYCO FROM WORK ON PREVIOUS PROJECTS AND BATHYMETRIC SURVEY BY THEW ASSOCIATES PERFORMED MAY 20, 2010.
5. UTILITY LOCATIONS WERE NOT CONFIRMED. THOSE SHOWN WERE OBTAINED FROM PREVIOUS PROJECTS PERFORMED AT THE SITE. THREE FULL DAYS PRIOR TO BEGINNING WORK THE SUBCONTRACTOR SHALL NOTIFY UTILITY OWNERS TO HAVE WORK AREA STAKE AND SHALL PROTECT OR HAVE RELOCATED AS NOTED IN THE SPECIFICATIONS.

DIGGERS HOTLINE

(800) 242-8511 (414) 259-1181

NO.	DATE	REVISION	BY	APVD

DSGN D ALLARD | DR M REICHERT | CHK | APVD

MENOMINEE RIVER SEDIMENTT REMOVAL
VERTICAL BARRIER WALL BULKHEAD SUPPORT
TYCO FIRE PRODUCTS LP
MARINETTE, WISCONSIN

CH2MHILL®

GENERAL
INDEX TO DRAWINGS, ABBREVIATIONS, CIVIL AND DESIGNATION LEGENDS

NO SCALE
VERIFY SCALE
BAR IS ONE INCH ON ORIGINAL DRAWING. 0 1"

DATE	AUGUST 2012
PROJ	438465
DWG	G-2
SHEET	2

PRELIMINARY

REUSE OF DOCUMENTS: THIS DOCUMENT, AND THE IDEAS AND DESIGNS INCORPORATED HEREIN, AS AN INSTRUMENT OF PROFESSIONAL SERVICE, IS THE PROPERTY OF CH2M HILL AND IS NOT TO BE USED, IN WHOLE OR IN PART, FOR ANY OTHER PROJECT WITHOUT THE WRITTEN AUTHORIZATION OF CH2MHILL.
©CH2M HILL 2009. ALL RIGHTS RESERVED.

US EPA ARCHIVE DOCUMENT

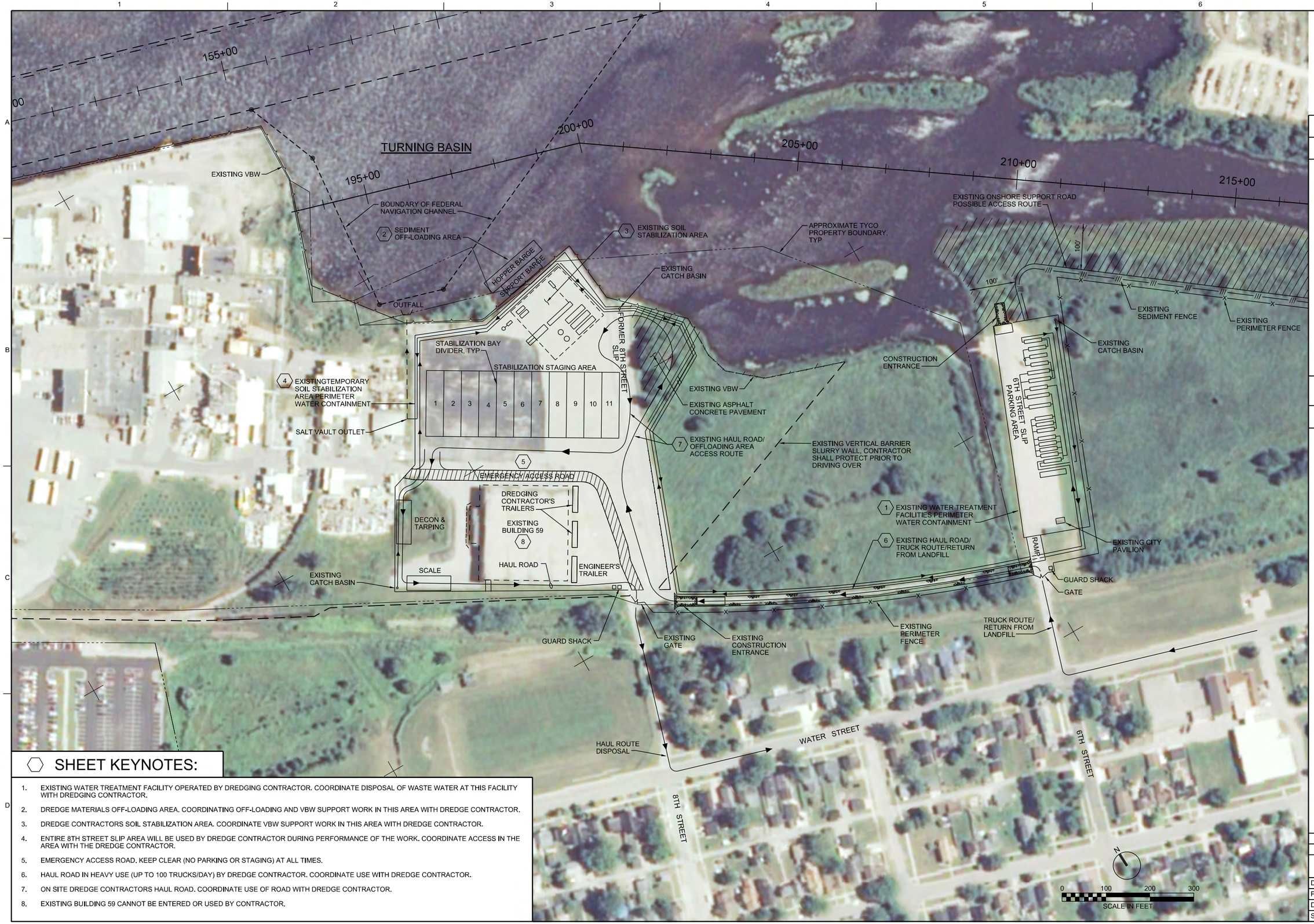

SHEET KEYNOTES:

1. EXISTING WATER TREATMENT FACILITY OPERATED BY DREDGING CONTRACTOR. COORDINATE DISPOSAL OF WASTE WATER AT THIS FACILITY WITH DREDGING CONTRACTOR.
2. DREDGE MATERIALS OFF-LOADING AREA. COORDINATING OFF-LOADING AND VBW SUPPORT WORK IN THIS AREA WITH DREDGE CONTRACTOR.
3. DREDGE CONTRACTORS SOIL STABILIZATION AREA. COORDINATE VBW SUPPORT WORK IN THIS AREA WITH DREDGE CONTRACTOR.
4. ENTIRE 8TH STREET SLIP AREA WILL BE USED BY DREDGE CONTRACTOR DURING PERFORMANCE OF THE WORK. COORDINATE ACCESS IN THE AREA WITH THE DREDGE CONTRACTOR.
5. EMERGENCY ACCESS ROAD. KEEP CLEAR (NO PARKING OR STAGING) AT ALL TIMES.
6. HAUL ROAD IN HEAVY USE (UP TO 100 TRUCKS/DAY) BY DREDGE CONTRACTOR. COORDINATE USE WITH DREDGE CONTRACTOR.
7. ON SITE DREDGE CONTRACTORS HAUL ROAD. COORDINATE USE OF ROAD WITH DREDGE CONTRACTOR.
8. EXISTING BUILDING 59 CANNOT BE ENTERED OR USED BY CONTRACTOR.

NO.	DATE	REVISION	BY	APVD

DSGN D ALLARD | DR M REICHERT | CHK | APVD

MENOMINEE RIVER SEDIMENTT REMOVAL
VERTICAL BARRIER WALL BULKHEAD SUPPORT
TYCO FIRE PRODUCTS LP
MARINETTE, WISCONSIN

CH2MHILL®

CIVIL
EXISTING SITE PLAN

1" = 100'
VERIFY SCALE
BAR IS ONE INCH ON ORIGINAL DRAWING.
0 1"

DATE	AUGUST 2012
PROJ	438465
DWG	C-1
SHEET	3

PRELIMINARY

REUSE OF DOCUMENTS: THIS DOCUMENT, AND THE IDEAS AND DESIGNS INCORPORATED HEREIN, AS AN INSTRUMENT OF PROFESSIONAL SERVICE, IS THE PROPERTY OF CH2M HILL AND IS NOT TO BE USED, IN WHOLE OR IN PART, FOR ANY OTHER PROJECT WITHOUT THE WRITTEN AUTHORIZATION OF CH2MHILL.
©CH2M HILL 2009. ALL RIGHTS RESERVED.

FILENAME: 025-C-2600_438465.dgn PLOT DATE: 2012\08\03 PLOT TIME: 9:06:46 AM

US EPA ARCHIVE DOCUMENT

SHEET KEYNOTES:

1. SHORELINE ACCESS AREA FOR CONTRACTORS USE IN REQUIRED AREA MUST BE FENCED (3231-410) AND SURROUNDED WITH A SEDIMENT FENCE (3125-165). COORDINATE ACCESS TO THESE AREAS WITH DREDGE CONTRACTOR.
2. PROVIDE CONCRETE JERSEY BARRIERS AND SEDIMENT FENCE ALONG CONSTRUCTED SHORELINE SUPPORT ROADS (3125-132). MAINTAIN DURING CONSTRUCTION.
3. PROVIDE TRUCK GRAVEL CONSTRUCTION ENTRANCE WHEREVER VEHICLES LEAVE GRAVEL ROADS (3125-130). MAINTAIN DURING CONSTRUCTION ACTIVITIES.
4. PERMITTED LIMIT OF WETLANDS DISTURBANCE AREA.

NO.	DATE	REVISION	BY	APVD

DSGN D ALLARD | DR M REICHERT | CHK | APVD

MENOMINEE RIVER SEDIMENTT REMOVAL
VERTICAL BARRIER WALL BULKHEAD SUPPORT
TYCO FIRE PRODUCTS LP
MARINETTE, WISCONSIN

CH2MHILL®

CIVIL
TEMPORARY FACILITIES AND EROSION CONTROL PLAN

1" = 100'
VERIFY SCALE
BAR IS ONE INCH ON ORIGINAL DRAWING.
0 1"

DATE	AUGUST 2012
PROJ	438465
DWG	C-2
SHEET	4

PRELIMINARY

REUSE OF DOCUMENTS: THIS DOCUMENT, AND THE IDEAS AND DESIGNS INCORPORATED HEREIN, AS AN INSTRUMENT OF PROFESSIONAL SERVICE, IS THE PROPERTY OF CH2M HILL AND IS NOT TO BE USED, IN WHOLE OR IN PART, FOR ANY OTHER PROJECT WITHOUT THE WRITTEN AUTHORIZATION OF CH2MHILL.
©CH2M HILL 2009. ALL RIGHTS RESERVED.

FILENAME: 025-C-2601_438465.dgn PLOT DATE: 2012\08\03 PLOT TIME: 9:00:05 AM

US EPA ARCHIVE DOCUMENT

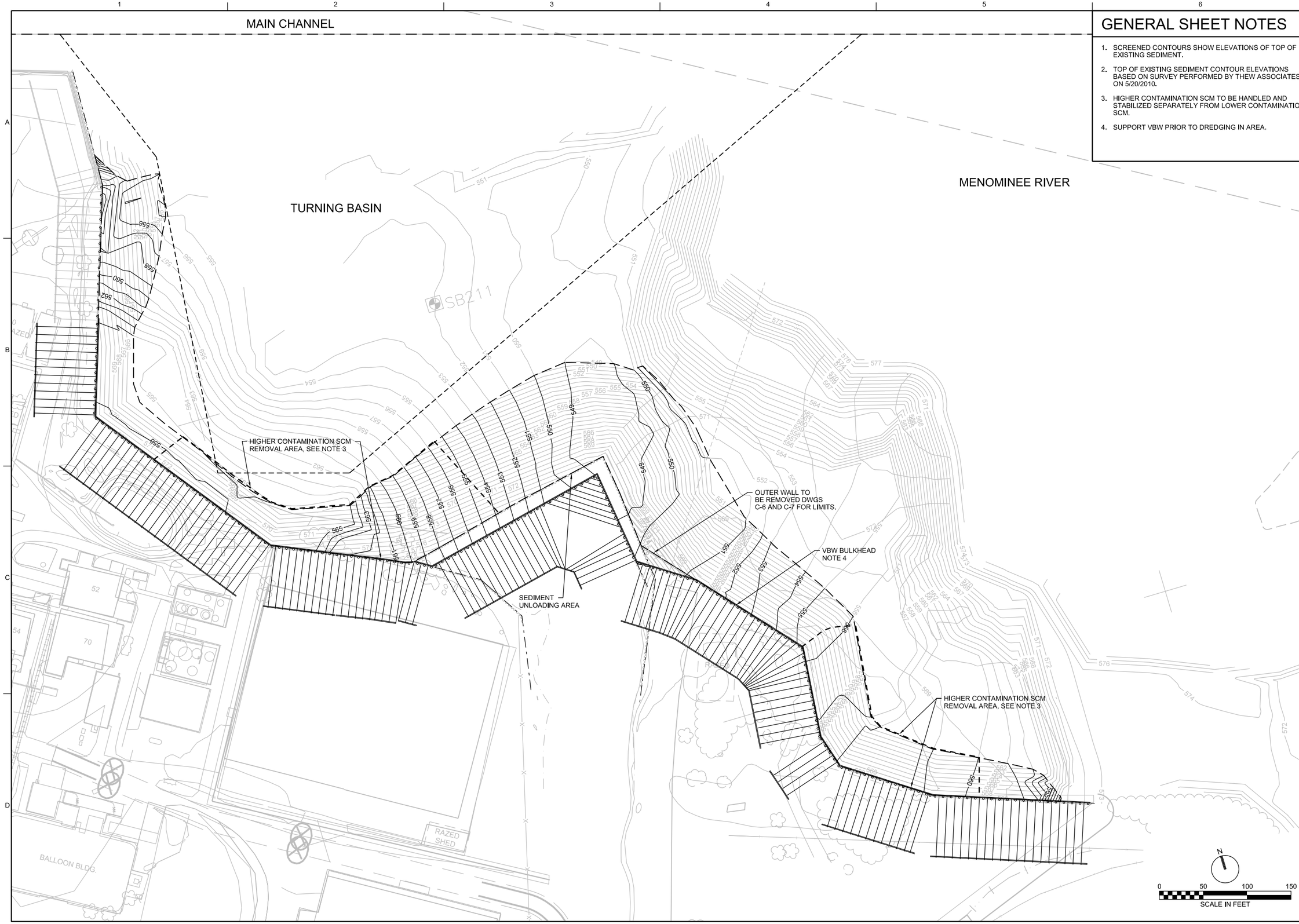

GENERAL SHEET NOTES

1. SCREENED CONTOURS SHOW ELEVATIONS OF TOP OF EXISTING SEDIMENT.
2. TOP OF EXISTING SEDIMENT CONTOUR ELEVATIONS BASED ON SURVEY PERFORMED BY THEW ASSOCIATES ON 5/20/2010.
3. HIGHER CONTAMINATION SCM TO BE HANDLED AND STABILIZED SEPARATELY FROM LOWER CONTAMINATION SCM.
4. SUPPORT VBW PRIOR TO DREDGING IN AREA.

NO.	DATE	REVISION	BY	APVD

DSGN D ALLARD | DR G BOWLES | CHK | APVD

MENOMINEE RIVER SEDIMENTT REMOVAL
VERTICAL BARRIER WALL BULKHEAD SUPPORT
TYCO FIRE PRODUCTS LP
MARINETTE, WISCONSIN

CH2MHILL®

CIVIL

DREDGE PLAN

1" = 50'

VERIFY SCALE

BAR IS ONE INCH ON ORIGINAL DRAWING.
0 1"

DATE	AUGUST 2012
PROJ	438465
DWG	C-3
SHEET	5

PRELIMINARY

REUSE OF DOCUMENTS: THIS DOCUMENT, AND THE IDEAS AND DESIGNS INCORPORATED HEREIN, AS AN INSTRUMENT OF PROFESSIONAL SERVICE, IS THE PROPERTY OF CH2M HILL AND IS NOT TO BE USED, IN WHOLE OR IN PART, FOR ANY OTHER PROJECT WITHOUT THE WRITTEN AUTHORIZATION OF CH2MHILL.

©CH2M HILL 2009. ALL RIGHTS RESERVED.

FILENAME: 025-C-2602_438465.dgn PLOT DATE: 2012\08\03 PLOT TIME: 1:32:41 PM

US EPA ARCHIVE DOCUMENT

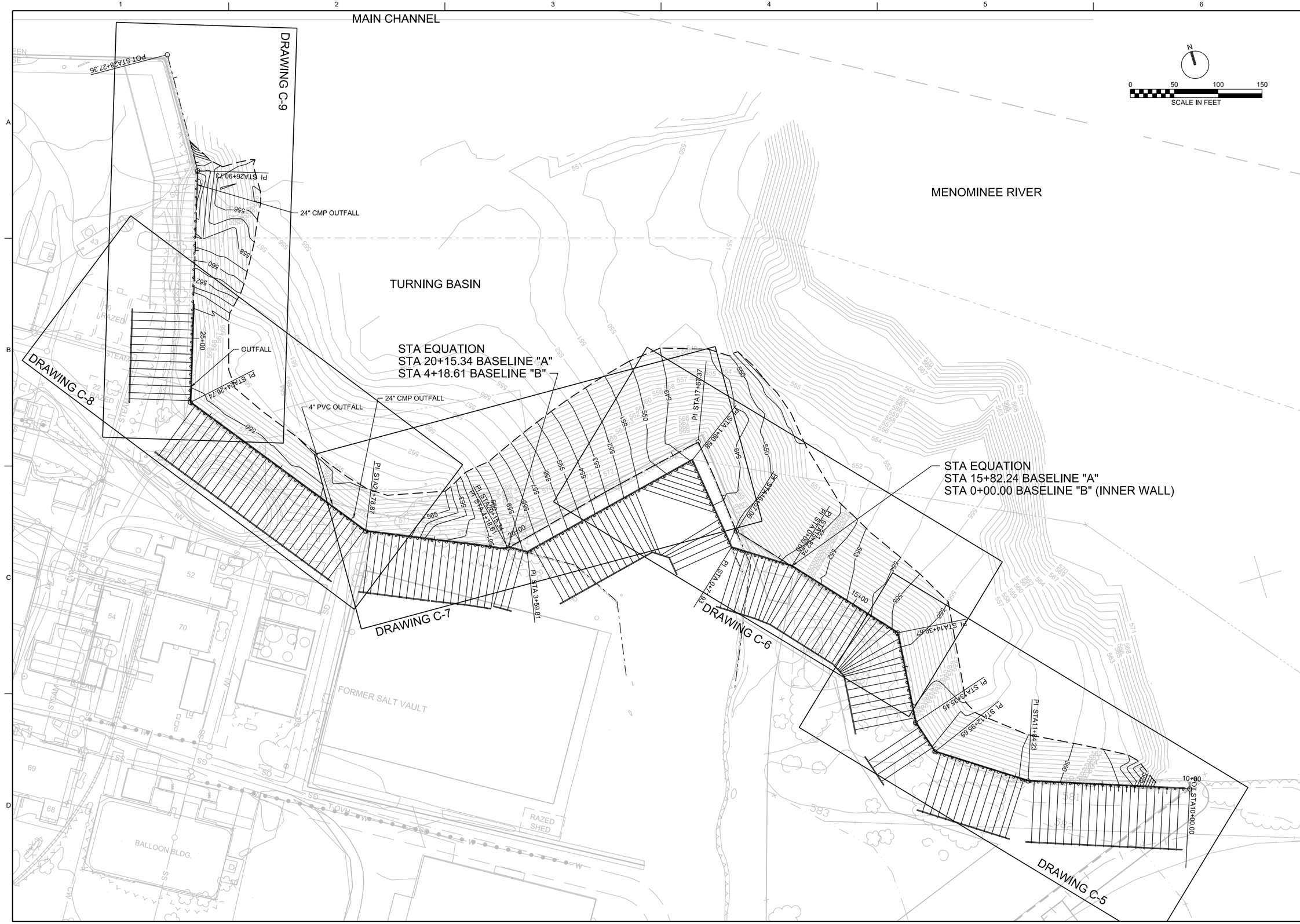

NO.	DATE	REVISION	BY	APVD

DSGN D ALLARD | DR M REICHERT | CHK | APVD

MENOMINEE RIVER SEDIMENTT REMOVAL
VERTICAL BARRIER WALL BULKHEAD SUPPORT
TYCO FIRE PRODUCTS LP
MARINETTE, WISCONSIN

CH2MHILL®

CIVIL

SHEET PILE KEY PLAN

1" = 50'

VERIFY SCALE

BAR IS ONE INCH ON ORIGINAL DRAWING.
0 1"

DATE	AUGUST 2012
PROJ	438465
DWG	C-4
SHEET	6

PRELIMINARY

REUSE OF DOCUMENTS: THIS DOCUMENT, AND THE IDEAS AND DESIGNS INCORPORATED HEREIN, AS AN INSTRUMENT OF PROFESSIONAL SERVICE, IS THE PROPERTY OF CH2M HILL AND IS NOT TO BE USED, IN WHOLE OR IN PART, FOR ANY OTHER PROJECT WITHOUT THE WRITTEN AUTHORIZATION OF CH2MHILL.

©CH2M HILL 2009. ALL RIGHTS RESERVED.

FILENAME: 025-C-2604_438465.dgn PLOT DATE: 2012\08\06 PLOT TIME: 7:15:56 AM

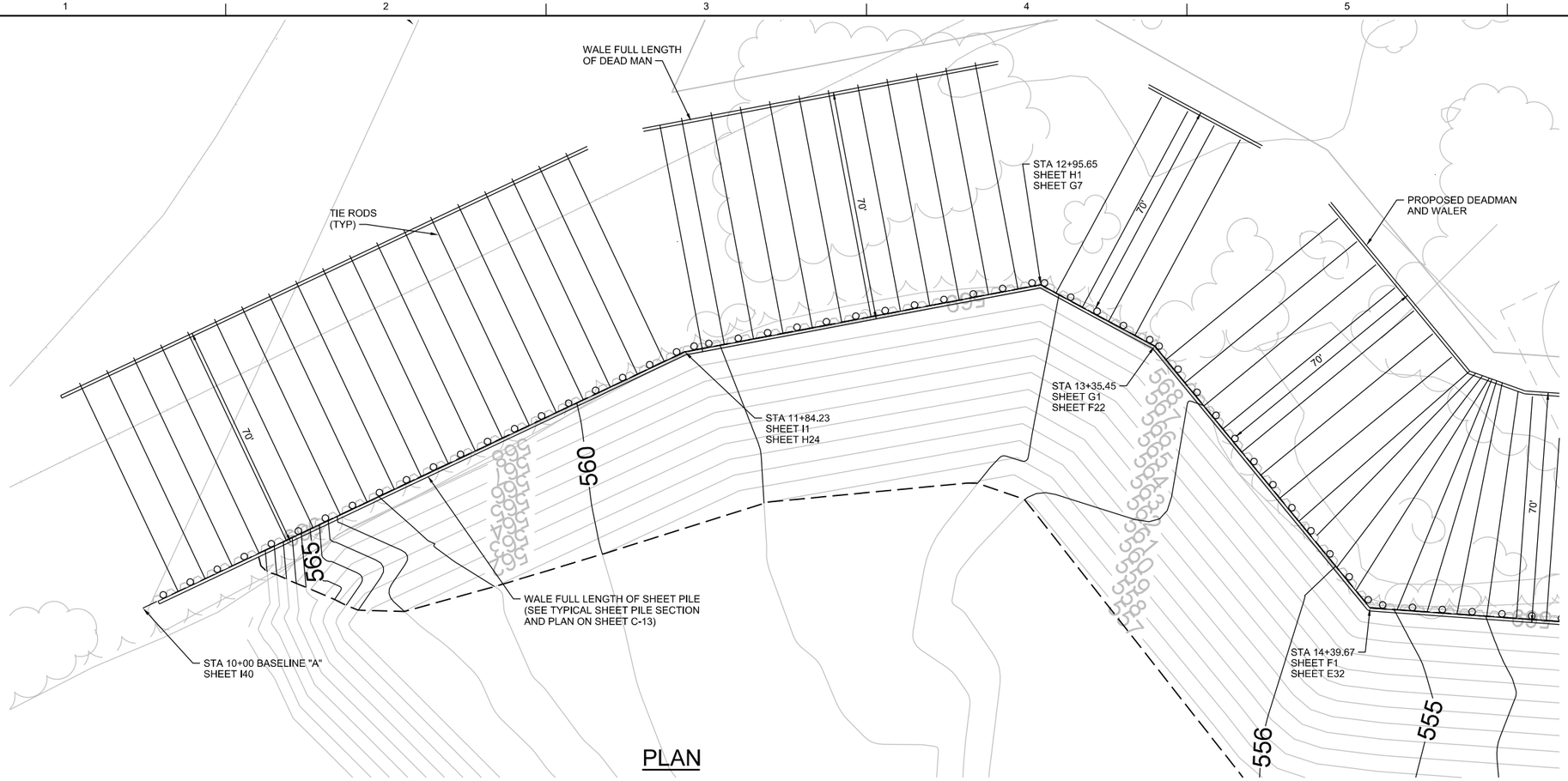

PLAN

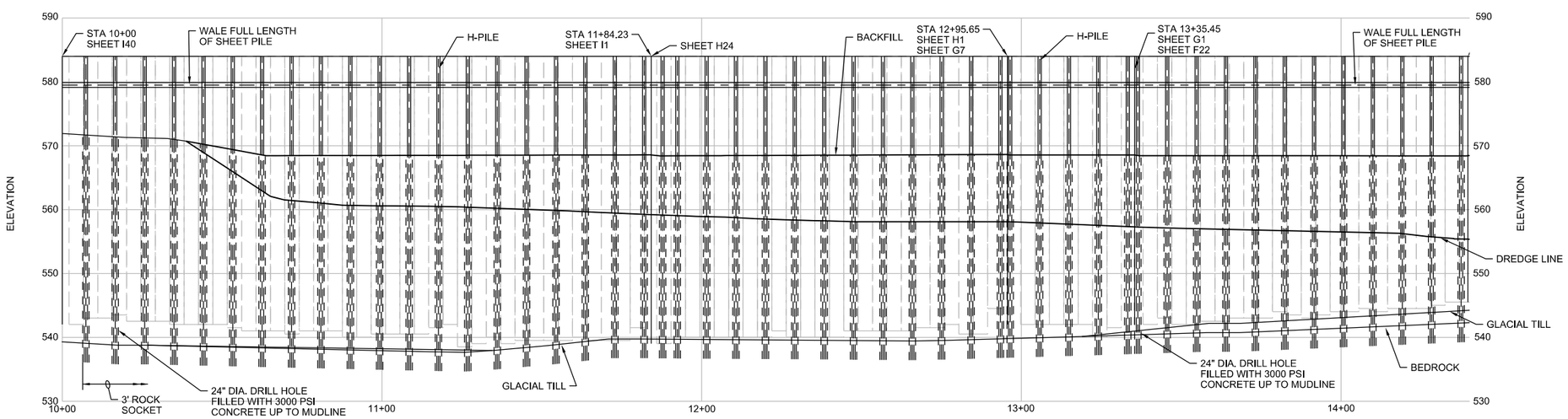

PROFILE

NOTES: (APPLY TO DWG C-5 THROUGH C-9)

1. GLACIAL TILL AND BEDROCK LAYERING HAS BEEN TAKEN FROM THE AECOM JANUARY 22, 2010 DESIGN DOCUMENT TITLED, "TYCO SAFETY PRODUCTS, ANSUL PHASE 1 VERTICAL BARRIER WALL, MARINETTE, WISCONSIN". THE LAYERING IS SPECIFICALLY FROM THE EARTH TECH CROSS-SECTIONS WHICH WERE INCLUDED AS A REFERENCE IN THAT DESIGN PACKAGE.
2. SOIL LAYERING IS CONSIDERED APPROXIMATE AND WAS INTERPRETED FROM THE INDIVIDUAL BORING LOCATIONS. THE LOCATION OF THE LAYER BREAKS SHOULD BE CONSIDERED APPROXIMATE BETWEEN BORING LOCATIONS AND ONLY USED AS A GUIDE TO ANTICIPATED CHANGE IN LAYERS. ACTUAL LAYER BREAKS ARE LIKELY TO BE MORE GRADUAL THAN SHOWN.
3. ALL SOLDIER PILES SHALL BE INSTALLED TO A FINAL TIP ELEVATION THAT SATISFIES THE MINIMUM ROCK SOCKET CRITERIA DEFINED IN THE PILE SCHEDULE ON DWG C-13. THE TOP OF ROCK SHALL BE DETERMINED BASED ON THE CRITERIA DEFINED IN THE SPECIFICATIONS.
4. ALL EXISTING SHEET PILES ARE AZ39-700 EXCEPT FOR THE SHEETING IN THE 8¨ STREET SLIP AREA WHICH ARE AZ26.

NO.	DATE	REVISION	BY	APVD

DSGN D ALLARD | DR G BOWLES | CHK | APVD

MENOMINEE RIVER SEDIMENTT REMOVAL
VERTICAL BARRIER WALL BULKHEAD SUPPORT
TYCO FIRE PRODUCTS LP
MARINETTE, WISCONSIN

CH2MHILL®

CIVIL
SHEET PILE PLAN AND PROFILE
STA 10+00 TO 14+39

1" = 20'
VERIFY SCALE
BAR IS ONE INCH ON ORIGINAL DRAWING.
0 1"

DATE	AUGUST 2012
PROJ	438465
DWG	C-5
SHEET	7

PRELIMINARY

REUSE OF DOCUMENTS: THIS DOCUMENT, AND THE IDEAS AND DESIGNS INCORPORATED HEREIN, AS AN INSTRUMENT OF PROFESSIONAL SERVICE, IS THE PROPERTY OF CH2M HILL AND IS NOT TO BE USED, IN WHOLE OR IN PART, FOR ANY OTHER PROJECT WITHOUT THE WRITTEN AUTHORIZATION OF CH2MHILL.
©CH2M HILL 2009. ALL RIGHTS RESERVED.

FILENAME: 025-C-2605_438465.dgn PLOT DATE: 2012\08\03 PLOT TIME: 11:01:12 AM

US EPA ARCHIVE DOCUMENT

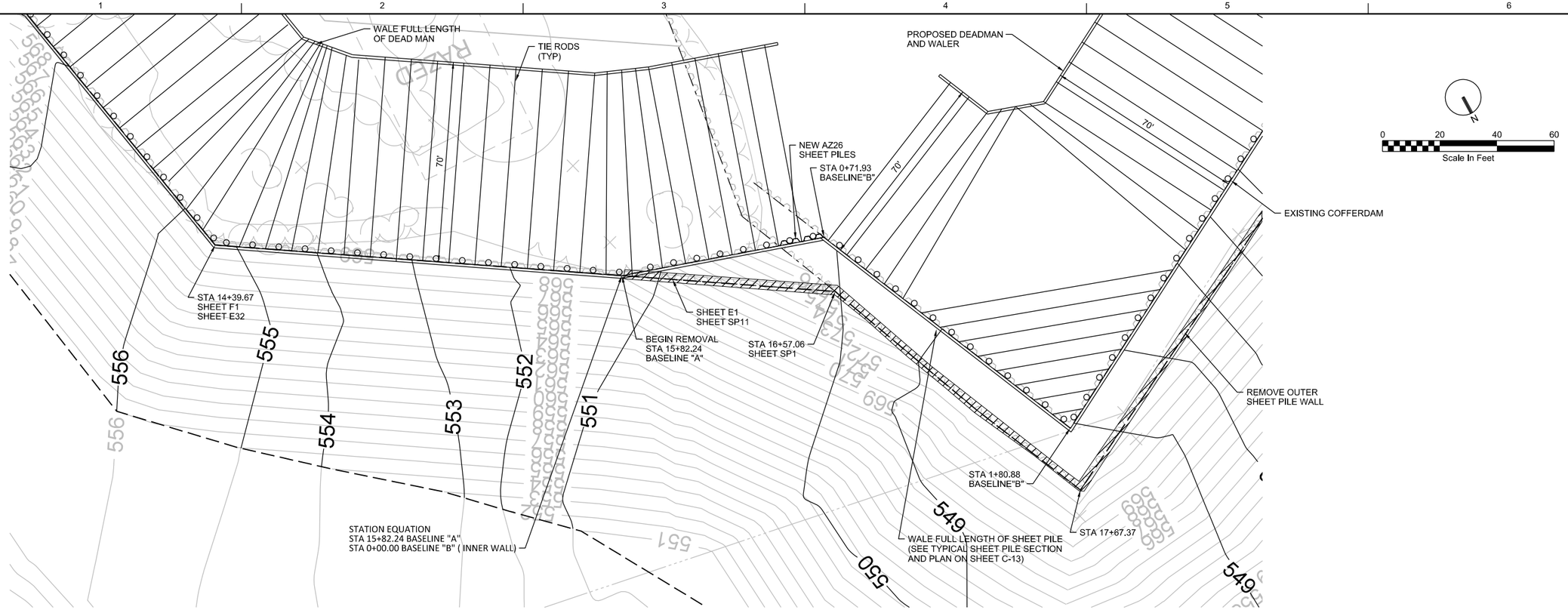

PLAN

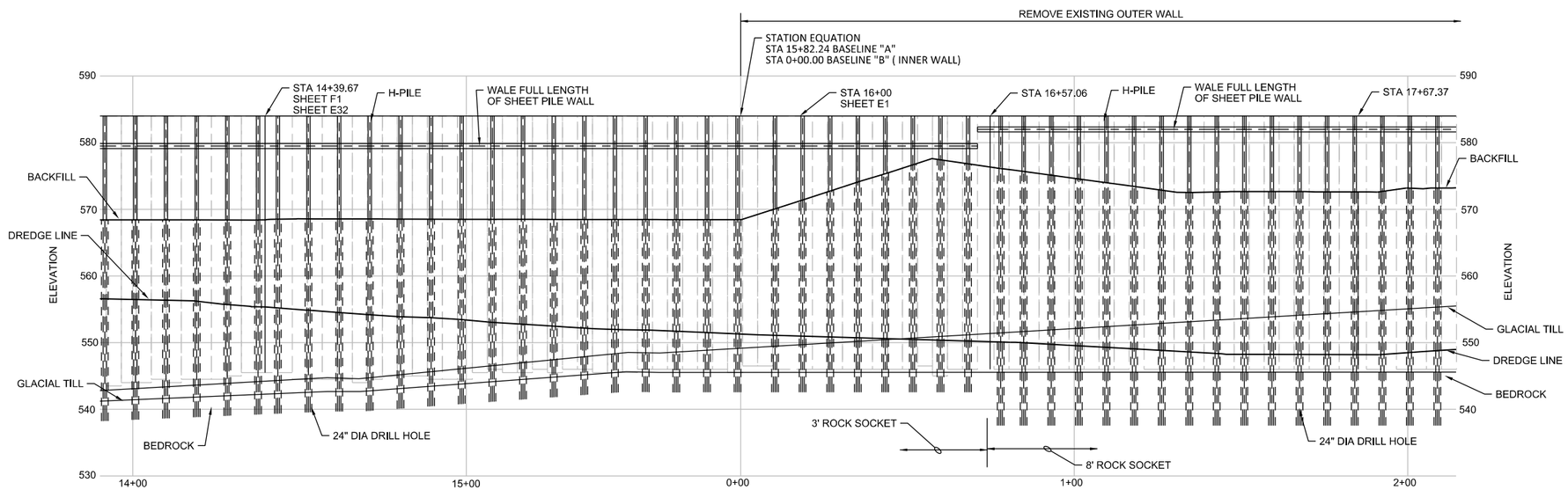

PROFILE

NOTES:
1. AS-BUILT TIP ELEVATIONS OF THE EXISTING SHEET PILING SHOWN ON THE PROFILE WITHIN THE 8° STREET SLIP AREA ARE FOR THE INNER SHEET PILE COFFERDAM. THE INNER COFFERDAM WAS CONSTRUCTED USING AZ26 SHEET PILES.
2. AS-BUILT TIP ELEVATIONS OF THE OUTER BULKHEAD ARE UNKNOWN, THE OUTER SHEET PILES ARE AZ26 SHEET PILES.

NO.	DATE	REVISION	BY	APVD

DSGN D ALLARD | DR G BOWLES | CHK | APVD

MENOMINEE RIVER SEDIMENTT REMOVAL
VERTICAL BARRIER WALL BULKHEAD SUPPORT
TYCO FIRE PRODUCTS LP
MARINETTE, WISCONSIN

CH2MHILL®

CIVIL
SHEET PILE PLAN AND PROFILE
STA 14+39 TO 16+57

1" = 20'
VERIFY SCALE
BAR IS ONE INCH ON ORIGINAL DRAWING.
0 1"

DATE	AUGUST 2012
PROJ	438465
DWG	C-6
SHEET	8

PRELIMINARY

REUSE OF DOCUMENTS: THIS DOCUMENT, AND THE IDEAS AND DESIGNS INCORPORATED HEREIN, AS AN INSTRUMENT OF PROFESSIONAL SERVICE, IS THE PROPERTY OF CH2M HILL AND IS NOT TO BE USED, IN WHOLE OR IN PART, FOR ANY OTHER PROJECT WITHOUT THE WRITTEN AUTHORIZATION OF CH2MHILL.
©CH2M HILL 2009. ALL RIGHTS RESERVED.

US EPA ARCHIVE DOCUMENT

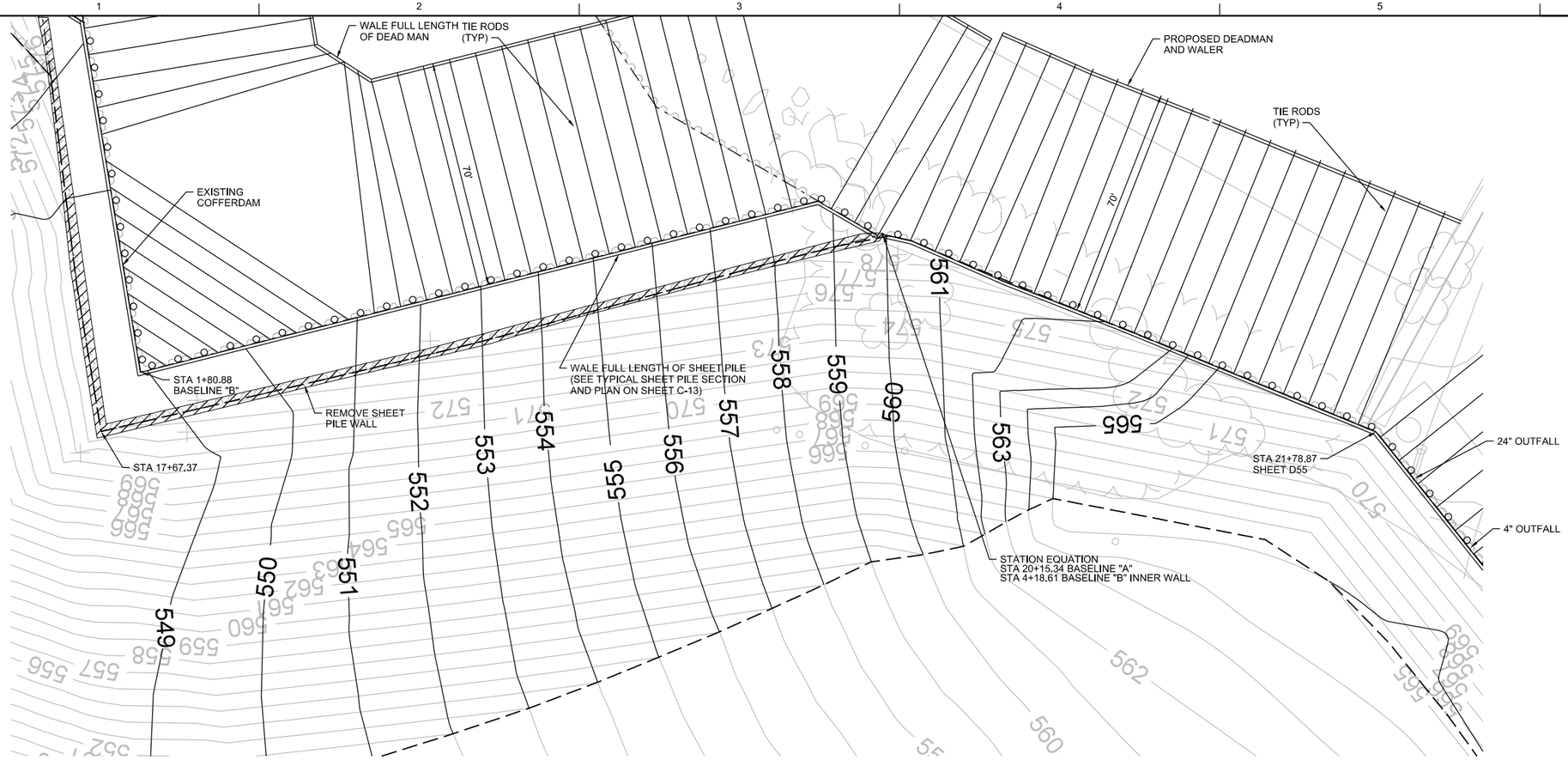

PLAN

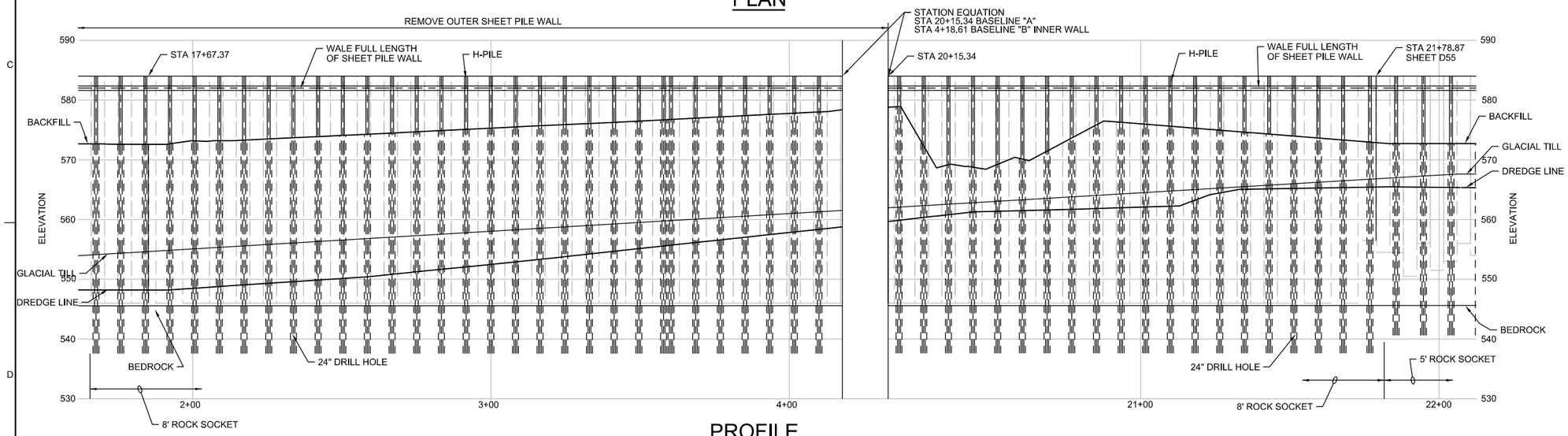

PROFILE

NOTES:
1. AS-BUILT TIP ELEVATIONS OF THE EXISTING SHEET PILING SHOWN ON THE PROFILE WITHIN THE 8" STREET SLIP AREA ARE FOR THE INNER SHEET PILE COFFERDAM. THE INNER COFFERDAM WAS CONSTRUCTED USING AZ26 SHEET PILES.
2. AS-BUILT TIP ELEVATIONS OF THE OUTER BULKHEAD ARE UNKNOWN, THE OUTER SHEET PILES ARE AZ26 SHEET PILES.

NO.	DATE	REVISION	BY	APVD

DSGN D ALLARD | DR G BOWLES | CHK | APVD

MENOMINEE RIVER SEDIMENTT REMOVAL
VERTICAL BARRIER WALL BULKHEAD SUPPORT
TYCO FIRE PRODUCTS LP
MARINETTE, WISCONSIN

CH2MHILL®

CIVIL
SHEET PILE PLAN AND PROFILE
STA 17+67 TO 22+00

1" = 20'
VERIFY SCALE
BAR IS ONE INCH ON ORIGINAL DRAWING.
0 1"

DATE	AUGUST 2012
PROJ	438465
DWG	C-7
SHEET	9

PRELIMINARY

REUSE OF DOCUMENTS: THIS DOCUMENT, AND THE IDEAS AND DESIGNS INCORPORATED HEREIN, AS AN INSTRUMENT OF PROFESSIONAL SERVICE, IS THE PROPERTY OF CH2M HILL AND IS NOT TO BE USED, IN WHOLE OR IN PART, FOR ANY OTHER PROJECT WITHOUT THE WRITTEN AUTHORIZATION OF CH2MHILL.
©CH2M HILL 2009. ALL RIGHTS RESERVED.

FILENAME: 025-C-2607_438465.dgn PLOT DATE: 2012\08\06 PLOT TIME: 7:18:58 AM

US EPA ARCHIVE DOCUMENT

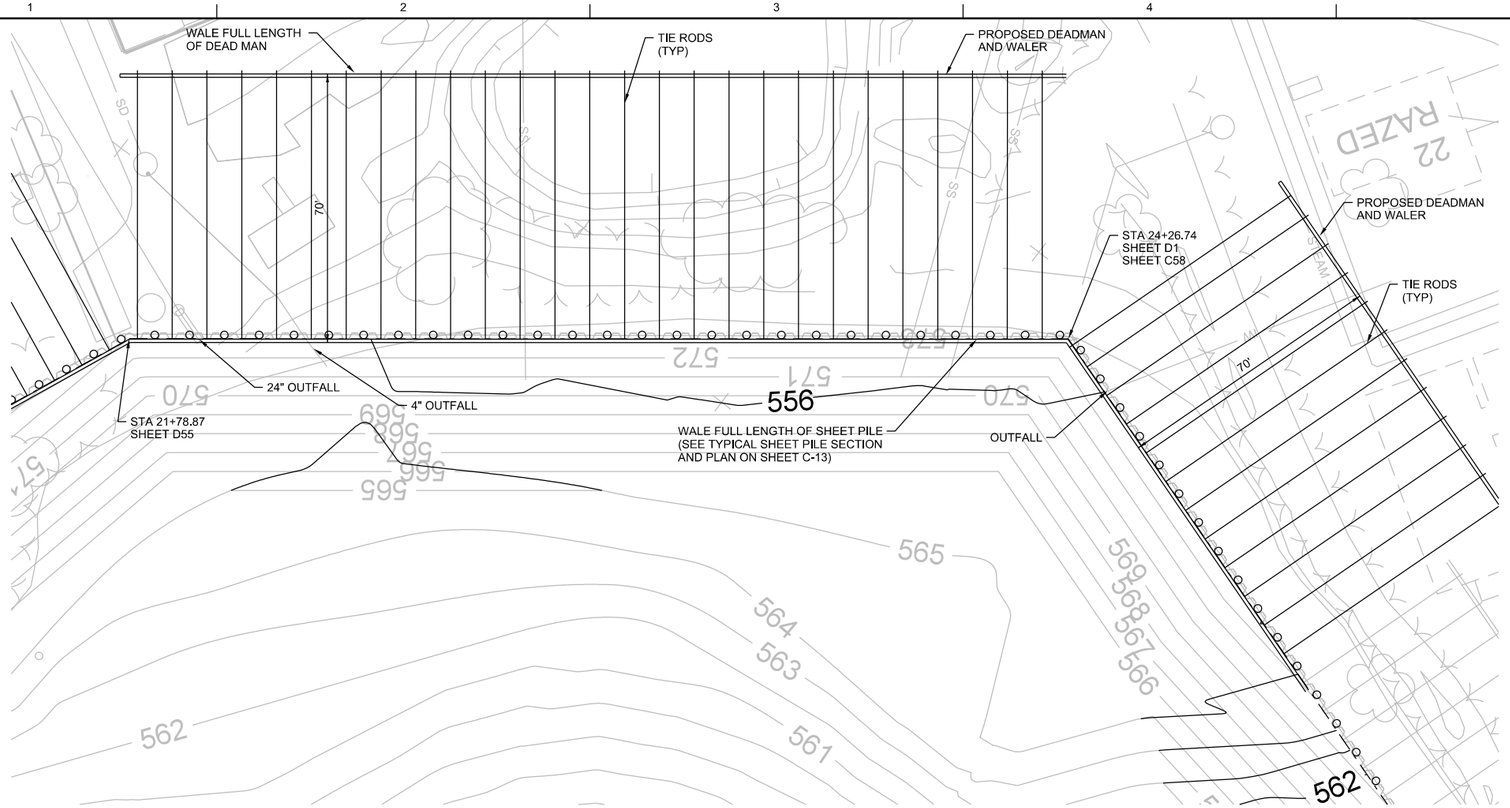

PLAN

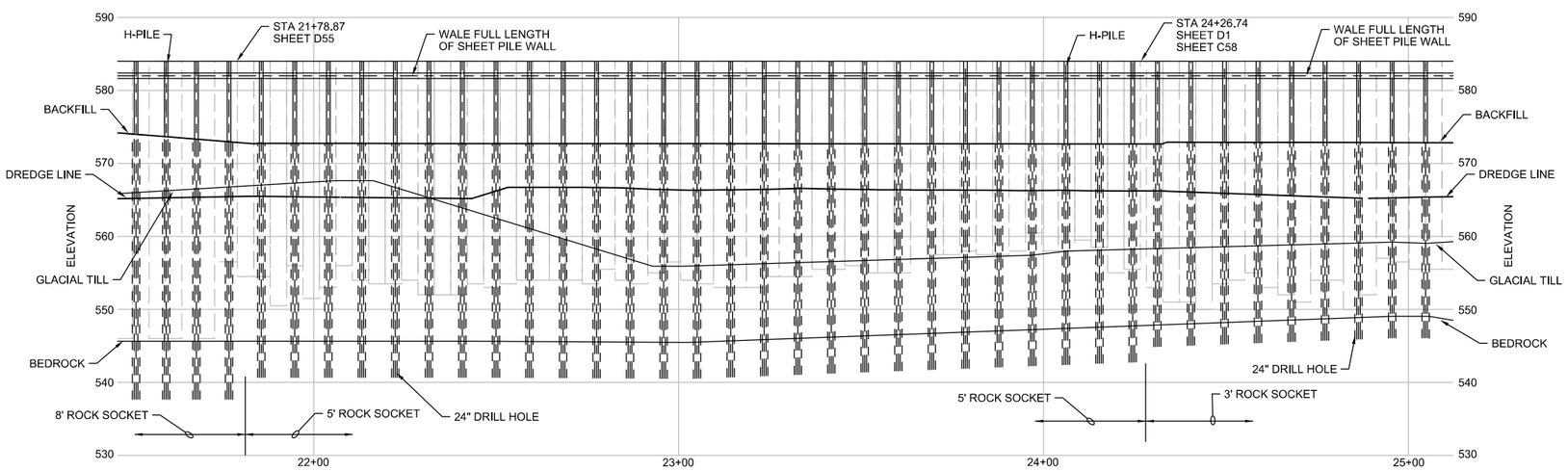

PROFILE

0 20 40 60
Scale In Feet

NO.	DATE	REVISION	BY	APVD

DSGN | DR | CHK | APVD
ENGINEER | DRAWN-BY

MENOMINEE RIVER SEDIMENTT REMOVAL
VERTICAL BARRIER WALL BULKHEAD SUPPORT
TYCO FIRE PRODUCTS LP
MARINETTE, WISCONSIN

CH2MHILL®

CIVIL
SHEET PILE PLAN AND PROFILE
STA 22+00 TO 25+00

1" = 20'
VERIFY SCALE
BAR IS ONE INCH ON ORIGINAL DRAWING.
0 1"

DATE	AUGUST 2012
PROJ	438465
DWG	C-8
SHEET	10

PRELIMINARY

REUSE OF DOCUMENTS: THIS DOCUMENT, AND THE IDEAS AND DESIGNS INCORPORATED HEREIN, AS AN INSTRUMENT OF PROFESSIONAL SERVICE, IS THE PROPERTY OF CH2M HILL AND IS NOT TO BE USED, IN WHOLE OR IN PART, FOR ANY OTHER PROJECT WITHOUT THE WRITTEN AUTHORIZATION OF CH2MHILL.
©CH2M HILL 2009. ALL RIGHTS RESERVED.

FILENAME: 025-C-2608_438465.dgn PLOT DATE: 2012\08\06 PLOT TIME: 7:20:59 AM

US EPA ARCHIVE DOCUMENT

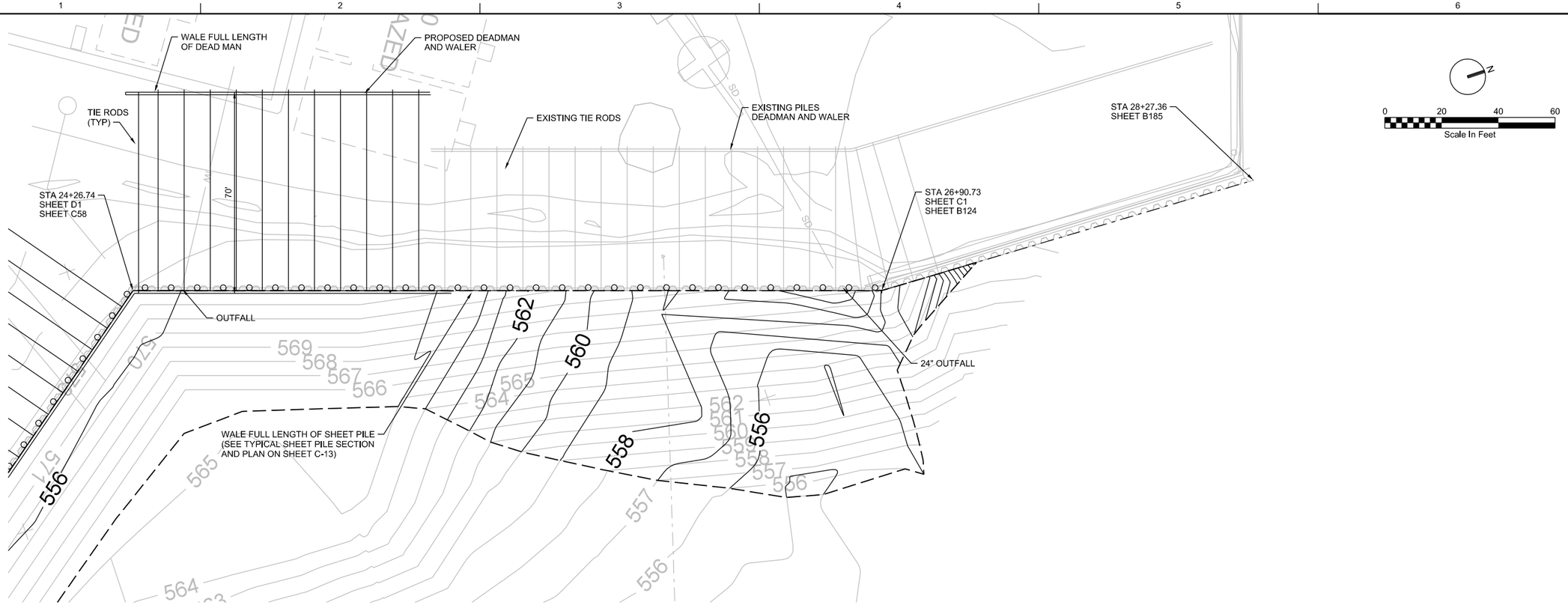

PLAN

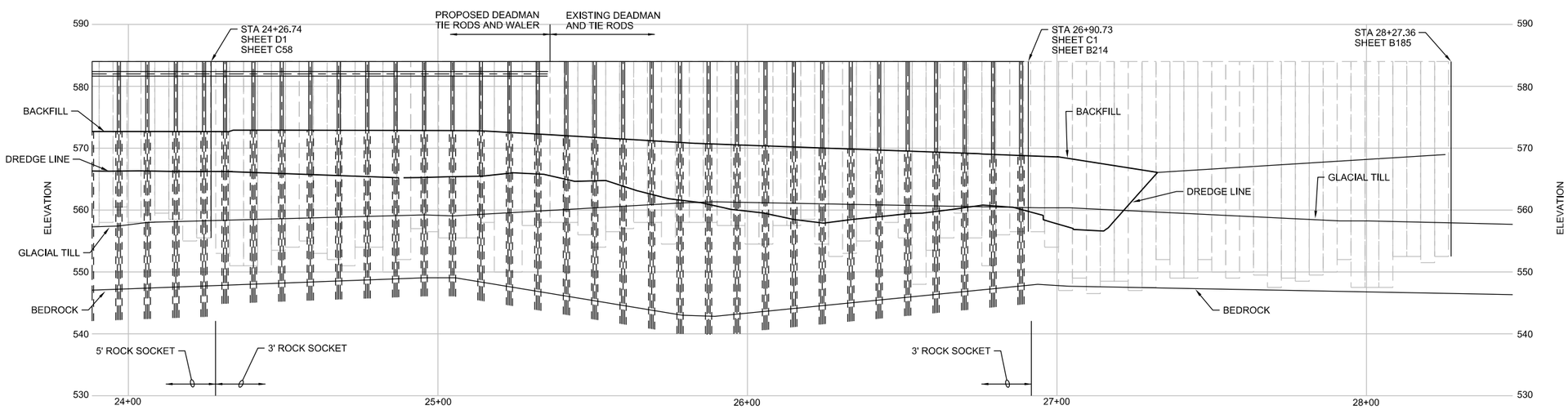

PROFILE

NO.	DATE	REVISION	BY	APVD

DSGN D ALLARD | DR G BOWLES | CHK | APVD

MENOMINEE RIVER SEDIMENTT REMOVAL
VERTICAL BARRIER WALL BULKHEAD SUPPORT
TYCO FIRE PRODUCTS LP
MARINETTE, WISCONSIN

CH2MHILL®

CIVIL
SHEET PILE PLAN AND PROFILE
STA 24+00 TO 28+27

1" = 20'
VERIFY SCALE
BAR IS ONE INCH ON ORIGINAL DRAWING.
0 1"

DATE	AUGUST 2012
PROJ	438465
DWG	C-9
SHEET	11

PRELIMINARY

REUSE OF DOCUMENTS: THIS DOCUMENT, AND THE IDEAS AND DESIGNS INCORPORATED HEREIN, AS AN INSTRUMENT OF PROFESSIONAL SERVICE, IS THE PROPERTY OF CH2M HILL AND IS NOT TO BE USED, IN WHOLE OR IN PART, FOR ANY OTHER PROJECT WITHOUT THE WRITTEN AUTHORIZATION OF CH2MHILL.
©CH2M HILL 2009. ALL RIGHTS RESERVED.

US EPA ARCHIVE DOCUMENT

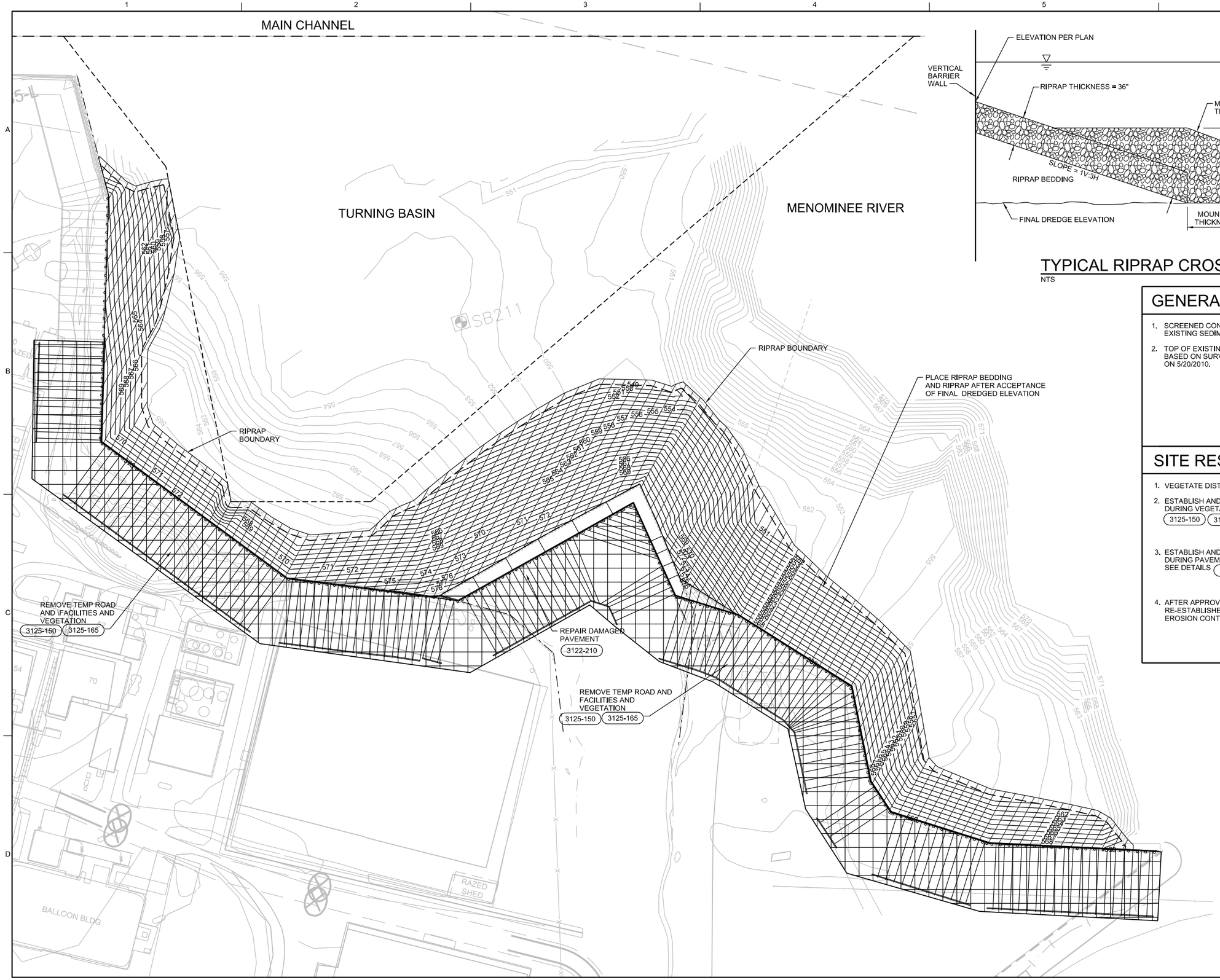

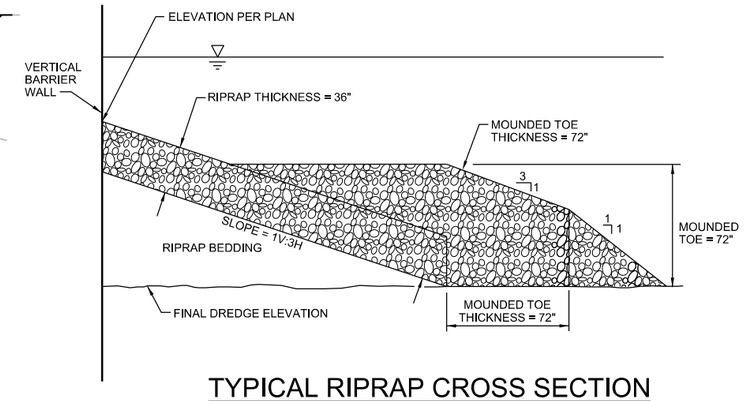

TYPICAL RIPRAP CROSS SECTION

NTS

GENERAL SHEET NOTES

1. SCREENED CONTOURS SHOW ELEVATIONS OF TOP OF EXISTING SEDIMENT.
2. TOP OF EXISTING SEDIMENT CONTOUR ELEVATIONS BASED ON SURVEY PERFORMED BY THEW ASSOCIATES ON 5/20/2010.

SITE RESTORATION NOTES

1. VEGETATE DISTURBED AREAS PER SPECIFICATIONS.
2. ESTABLISH AND MAINTAIN EROSION CONTROL MEASURES DURING VEGETATION ESTABLISHMENT. SEE DETAILS 3125-150 3125-165
3. ESTABLISH AND MAINTAIN EROSION CONTROL MEASURES DURING PAVEMENT REMOVAL AND RESTORATION ACTIVITIES. SEE DETAILS 3125-150 AND 3125-165
4. AFTER APPROVAL THAT NEW VEGETATION IS SUCCESSFULLY RE-ESTABLISHED, CONTRACTOR SHALL REMOVE REMAINING EROSION CONTROL MEASURES.

NO.	DATE	REVISION	BY	APVD

DSGN D ALLARD | DR G BOWLES | CHK | APVD

MENOMINEE RIVER SEDIMENTT REMOVAL
VERTICAL BARRIER WALL BULKHEAD SUPPORT
TYCO FIRE PRODUCTS LP
MARINETTE, WISCONSIN

CH2MHILL®

CIVIL

BACKFILL PLAN AND SECTION

1" = 50'

VERIFY SCALE

BAR IS ONE INCH ON ORIGINAL DRAWING,
0 1"

DATE	AUGUST 2012
PROJ	438465
DWG	C-10
SHEET	12

PRELIMINARY

REUSE OF DOCUMENTS: THIS DOCUMENT, AND THE IDEAS AND DESIGNS INCORPORATED HEREIN, AS AN INSTRUMENT OF PROFESSIONAL SERVICE, IS THE PROPERTY OF CH2M HILL AND IS NOT TO BE USED, IN WHOLE OR IN PART, FOR ANY OTHER PROJECT WITHOUT THE WRITTEN AUTHORIZATION OF CH2MHILL.
©CH2M HILL 2009. ALL RIGHTS RESERVED.

FILENAME: 025-C-2611_438465.dgn PLOT DATE: 2012\08\03 PLOT TIME: 1:59:57 PM

US EPA ARCHIVE DOCUMENT

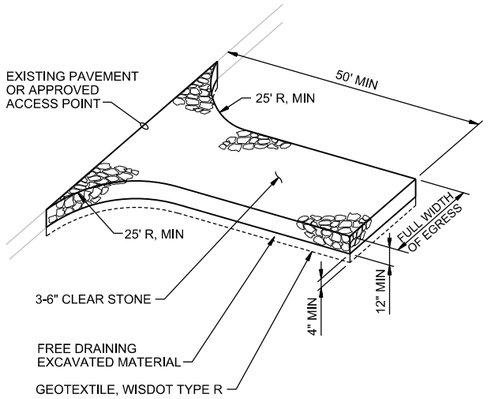

NOTES:

1. ADDITIONAL GRAVEL MAY HAVE TO BE ADDED PERIODICALLY TO MAINTAIN PROPER FUNCTION OF THE PAD.
2. REMOVE GRAVEL ENTRANCE AND REPLACE WITH NEW BASE COURSE PRIOR TO COMPLETION OF ACCESS ROAD.

GRAVEL CONSTRUCTION ENTRANCE

NTS

3125-130

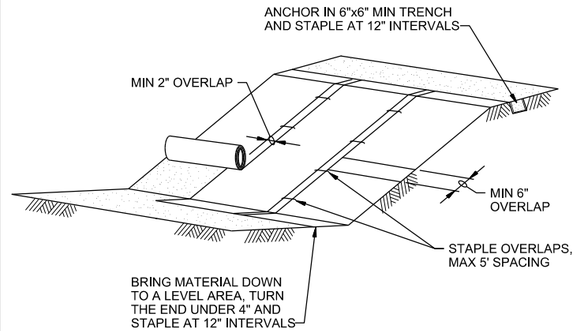

NOTES:

1. IF THERE IS A BERM AT THE TOP OF SLOPE, ANCHOR UPSLOPE OF THE BERM.
2. SLOPE SURFACE SHALL BE SMOOTH BEFORE PLACEMENT FOR PROPER SOIL CONTACT.
3. DO NOT STRETCH BLANKETS/MATTINGS TIGHT, ALLOW THE ROLLS TO MOLD TO ANY IRREGULARITIES.
4. STAPLING PATTERN AS PER MANUFACTURER'S RECOMMENDATIONS.
5. FOR SLOPES LESS THAN 3:1, ROLLS MAY BE PLACED IN HORIZONTAL STRIPS.
6. LIME, FERTILIZE AND SEED BEFORE INSTALLATION. PLANTING OF SHRUBS, TREES, ETC., SHOULD OCCUR AFTER INSTALLATION.

ESC BLANKET ON SLOPE

NTS

3125-150

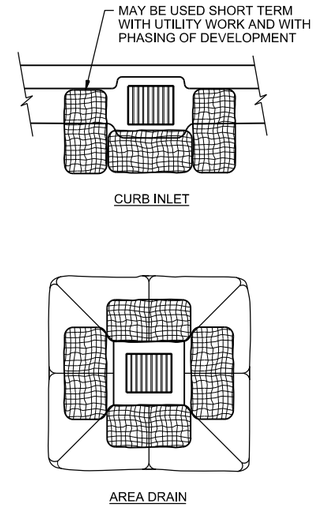

BIOFILTER BAG INLET BARRIER

NTS

3125-186

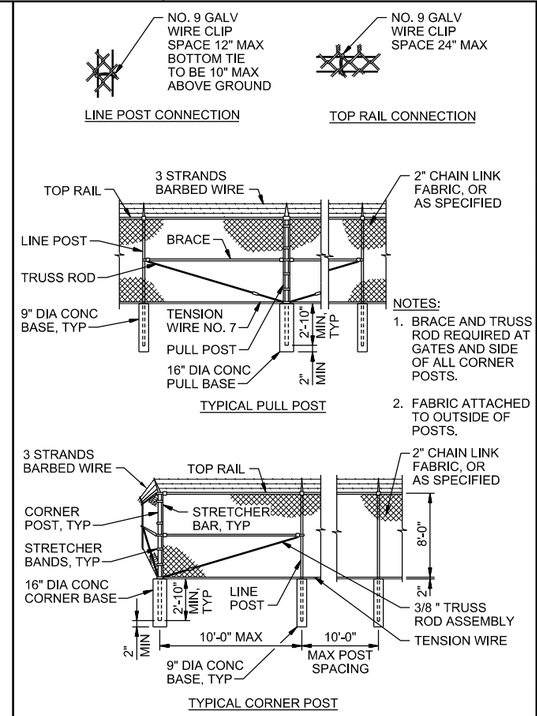

CHAIN LINK FENCE

NTS

3231-410

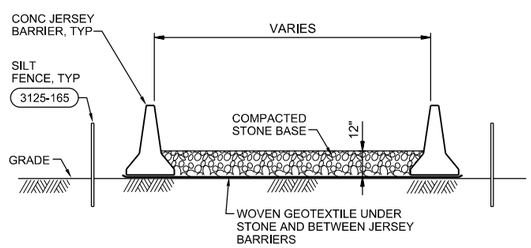

TYPICAL SECTION

HAUL ROAD

NTS

3125-132

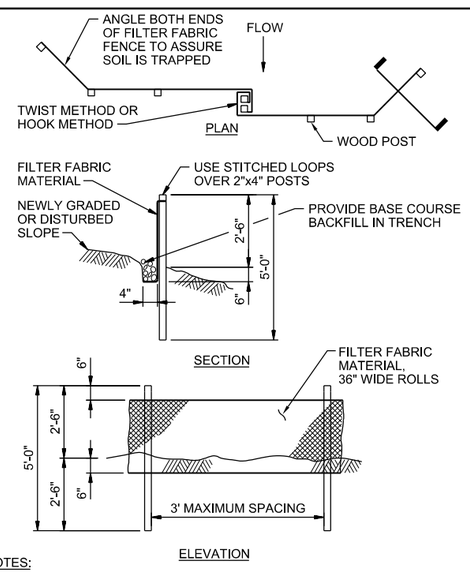

NOTES:

1. BURY BOTTOM OF FILTER FABRIC 6" VERTICALLY BELOW FINISHED GRADE.
2. WOOD POSTS 1 1/8" x 1 1/8" OAK OR HICKORY.
3. STITCHED LOOPS TO BE INSTALLED DOWNHILL SIDE OF SLOPE.
4. COMPACT ALL AREAS OF FILTER FABRIC TRENCH.
5. INSTALL SEDIMENT FENCE PARALLEL TO CONTOURS.
6. MAX FLOW THROUGH OF 10-GAL/MIN/SF AT 50 MM CONSTANT HEAD.

SILT FENCE

NTS

3125-165

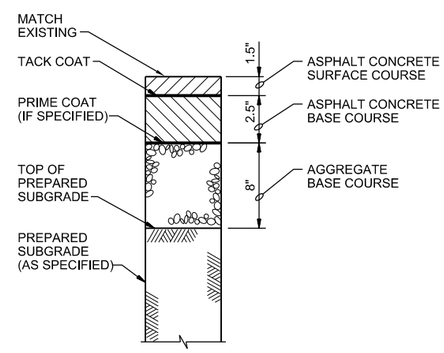

NOTE:

1. PROVIDE ASPHALT CONCRETE PAVEMENT TYPE AS SHOWN ON PLANS.
2. ALL NEW AND EXISTING PAVEMENT WITHIN THE WATER CONTAIMENT BARRIER AT 6TH STREET SLIP WATER TREATMENT AREAS SHALL BE SEAL COATED PRIOR TO EQUIPMENT PALCEMENT.

ASPHALT CONCRETE PAVEMENT

NTS

3212-210

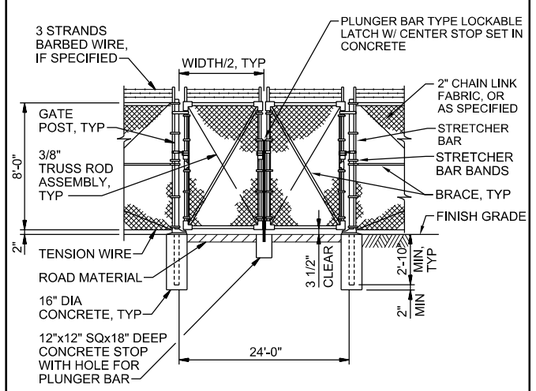

DOUBLE SWING GATE

NTS

3231-415

NO.	DATE	REVISION	BY	APVD

DSGN	DR	CHK	APVD
D ALLARD	M REICHERT		

MENOMINEE RIVER SEDIMENTT REMOVAL
VERTICAL BARRIER WALL BULKHEAD SUPPORT
TYCO FIRE PRODUCTS LP
MARINETTE, WISCONSIN

CH2MHILL®

CIVIL

STANDARD DETAILS

NO SCALE

VERIFY SCALE

BAR IS ONE INCH ON ORIGINAL DRAWING.
0 1"

DATE	AUGUST 2012
PROJ	438465
DWG	C-11
SHEET	13

PRELIMINARY

REUSE OF DOCUMENTS: THIS DOCUMENT, AND THE IDEAS AND DESIGNS INCORPORATED HEREIN, AS AN INSTRUMENT OF PROFESSIONAL SERVICE, IS THE PROPERTY OF CH2M HILL AND IS NOT TO BE USED, IN WHOLE OR IN PART, FOR ANY OTHER PROJECT WITHOUT THE WRITTEN AUTHORIZATION OF CH2MHILL.

©CH2M HILL 2009. ALL RIGHTS RESERVED.

US EPA ARCHIVE DOCUMENT

SHEET KEYNOTES

1. ALL STEEL WALERS, SUPPORT BRACKETS, BEARING PLATES, BOLTS, ETC. (EXCEPT SHEET PILES) EXPOSED TO THE ATMOSPHERE SHALL BE GALVANIZED AFTER FABRICATION. REPAIR GALVANIZING AT ALL FIELD WELDS.
2. INSTALL A PROTECTIVE CAP FILLED WITH GROUT TO THE ANCHOR ROD NUTS THAT ARE EXPOSED TO THE ATMOSPHERE AT THE EXISTING CANAL OUTLET TRANSITION SHEET PILE RETAINING WALLS.

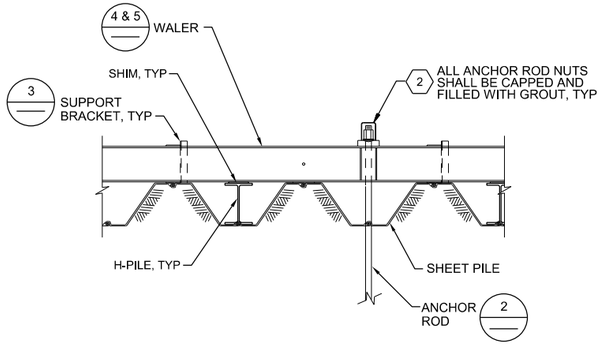

1 EXTERIOR WALER BEAM CONNECTION DETAIL
1/2"=1'-0"

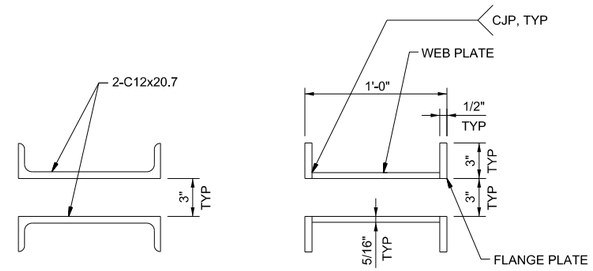

ALT 1
ROLLED WALER BEAM

ALT 2
BUILT-UP WALER BEAM

4 WALER BEAM ALTERNATIVES DETAIL
NTS

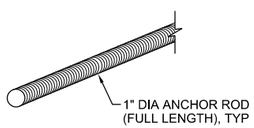

2 TYPICAL ANCHOR ROD DETAIL
NTS

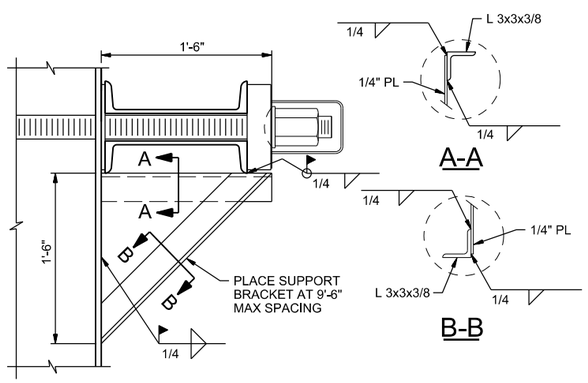

3 SUPPORT BRACKET DETAIL
NTS

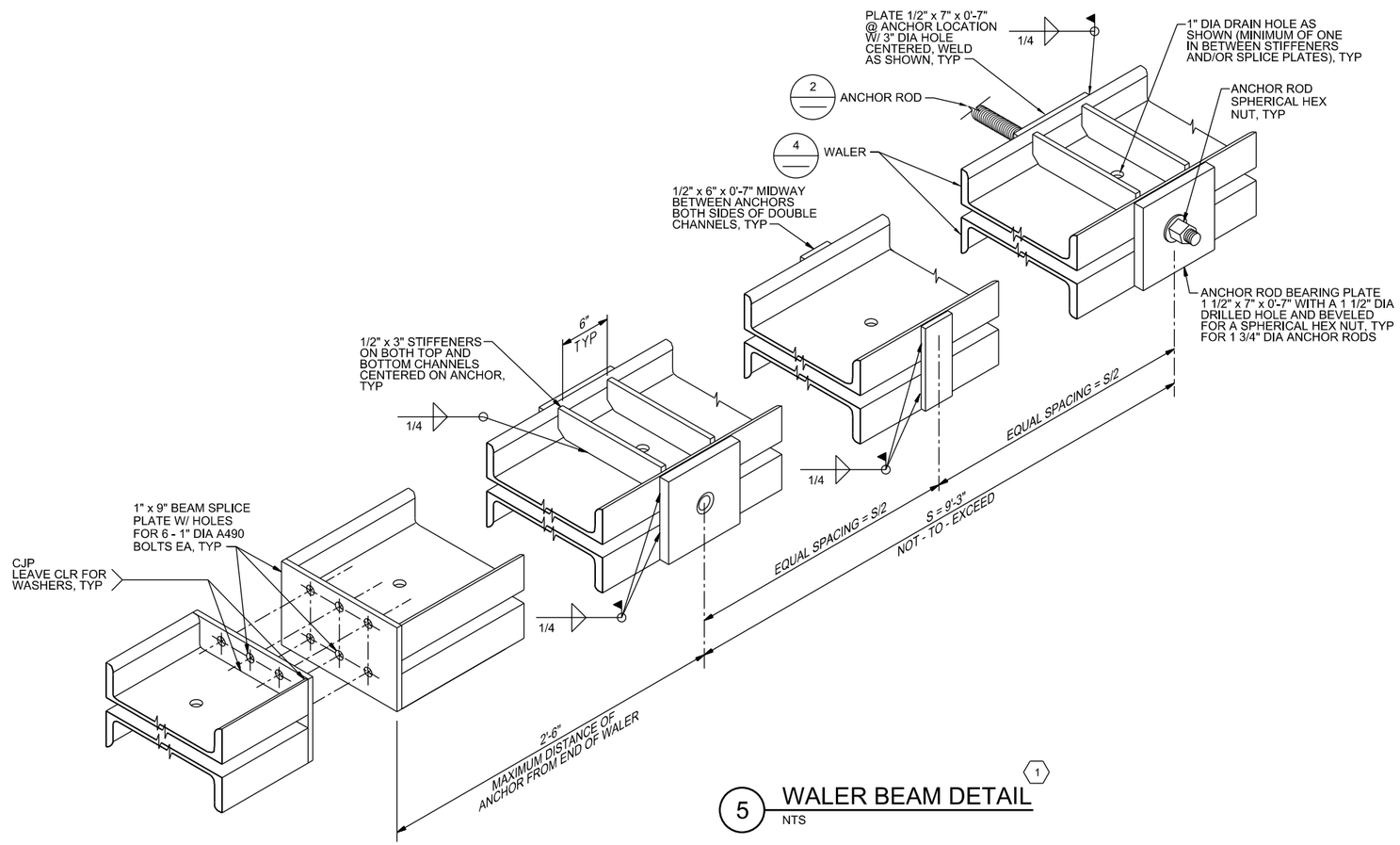

5 WALER BEAM DETAIL
NTS

NO.	DATE	REVISION	BY	APVD

DSGN	DR	CHK	APVD
D ALLARD	G BOWLES		

MENOMINEE RIVER SEDIMENTT REMOVAL
VERTICAL BARRIER WALL BULKHEAD SUPPORT
TYCO FIRE PRODUCTS LP
MARINETTE, WISCONSIN

CH2MHILL®

CIVIL
SHEET PILE DETAILS

NO SCALE
VERIFY SCALE
BAR IS ONE INCH ON ORIGINAL DRAWING,
0 1"

DATE	AUGUST 2012
PROJ	438465
DWG	C-12
SHEET	14

PRELIMINARY

REUSE OF DOCUMENTS: THIS DOCUMENT, AND THE IDEAS AND DESIGNS INCORPORATED HEREIN, AS AN INSTRUMENT OF PROFESSIONAL SERVICE, IS THE PROPERTY OF CH2M HILL AND IS NOT TO BE USED, IN WHOLE OR IN PART, FOR ANY OTHER PROJECT WITHOUT THE WRITTEN AUTHORIZATION OF CH2MHILL.
©CH2M HILL 2009. ALL RIGHTS RESERVED.

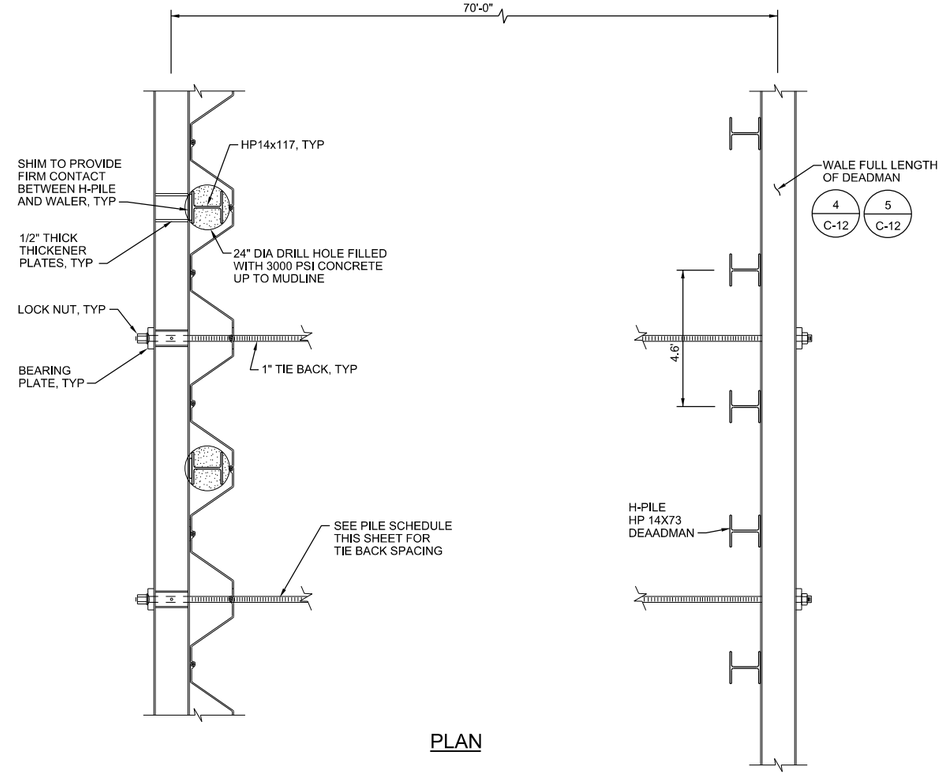

PLAN

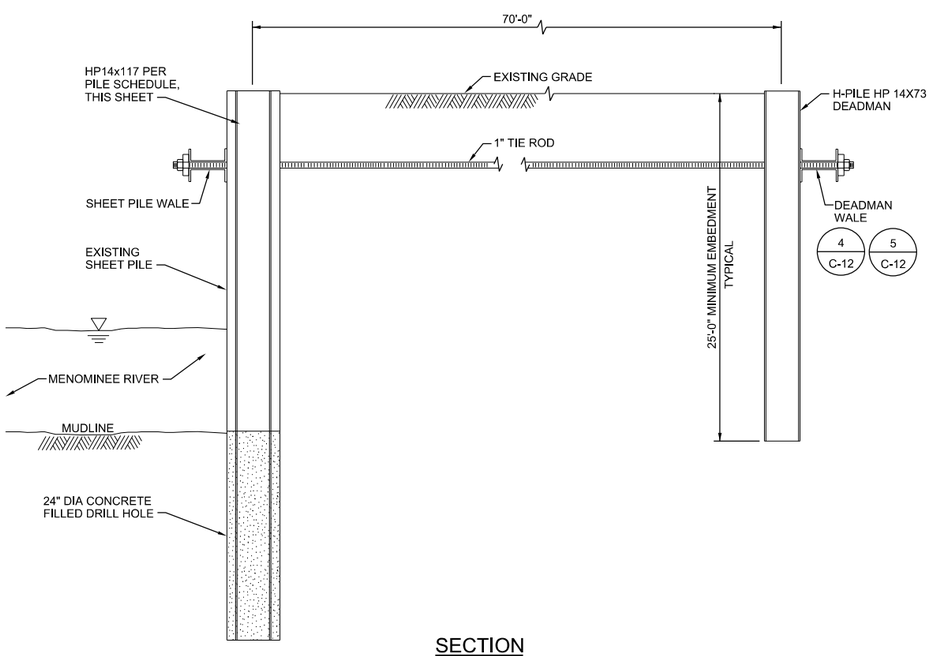

SECTION

TYPICAL SHEET PILE PLAN AND SECTION

NTS

PILE SERIES SUMMARY TABLE

H-PILE SERIES	EXISTING SHEETPILE TYPE	H-PILE SPACING (FEET)	H-PILE TYPE	NUMBER OF H-PILES	H-PILE CUTOFF ELEVATION (FEET)	H-PILE ROCK SOCKET LENGTH (FEET)	TIEBACK ELEVATION (FEET)	TIEBACK SPACING (FEET)
1	AZ39-700	9.2	HP14x117	50	584	3	579.5	9.2
2	AZ39-700	9.2	HP14x117	16	584	3	579.5	9.2
3	AZ26	8.3	HP14x117	50	584	8	582	8.3
4	AZ39-700	9.2	HP14x117	27	584	5	582	9.2
5	AZ39-700	9.2	HP14x117	13	584	3	582	9.2
6	AZ39-700	9.2	HP14x117	17	584	3	N/A	9.2
			TOTAL	173				

NOTES:

1. H-PILES SHALL BE HP14X117, MANUFACTURED IN ACCORDANCE WITH ASTM A992 WITH MINIMUM YIELD STRESS OF 50 KSI.
2. TIEBACKS SHALL BE MINIMUM 1-INCH DIAMETER THREADBAR MEETING REQUIREMENTS OF ASTM A722, WITH F_{PJ} = 150 KSI AS PROVIDED BY THE DYWIDAG THREADBAR MANUFACTURED BY DYWIDAG-SYSTEMS INTERNATIONAL OR APPROVED EQUAL.
3. THE STATIONING PROVIDED FOR THE PROPOSED H-PILES ARE APPROXIMATED. FINAL H-PILE LOCATION SHALL BE FIELD ADJUSTED TO PROVIDE ONE H-PILE AT EVERY OTHER PAIR OF SHEETPILE WEBS AS SHOWN IN THE DETAILS.

I, H, G, F SECTIONS

STATION	PILE NO.	SERIES
1002.30	HP001	1
1011.48	HP002	1
1020.67	HP003	1
1029.86	HP004	1
1039.04	HP005	1
1048.23	HP006	1
1057.41	HP007	1
1066.60	HP008	1
1075.79	HP009	1
1084.97	HP010	1
1094.16	HP011	1
1103.35	HP012	1
1112.53	HP013	1
1121.72	HP014	1
1130.91	HP015	1
1140.09	HP016	1
1149.28	HP017	1
1158.46	HP018	1
1167.65	HP019	1
1176.84	HP020	1
1186.53	HP021	1
1195.71	HP022	1
1204.90	HP023	1
1214.09	HP024	1
1223.27	HP025	1
1232.46	HP026	1
1241.64	HP027	1
1250.83	HP028	1
1260.02	HP029	1
1269.20	HP030	1
1278.39	HP031	1
1287.58	HP032	1
1292.17	HP033	1
1297.95	HP034	1
1307.13	HP035	1
1316.32	HP036	1
1325.51	HP037	1
1334.69	HP038	1
1337.75	HP039	1
1346.93	HP040	1
1356.12	HP041	1
1365.31	HP042	1
1374.49	HP043	1
1383.68	HP044	1
1392.86	HP045	1
1402.05	HP046	1
1411.24	HP047	1
1420.42	HP048	1
1429.61	HP049	1
1438.80	HP050	1

E, SP SECTIONS

STATION	PILE NO.	SERIES
1441.97	HP051	2
1451.15	HP052	2
1460.34	HP053	2
1469.53	HP054	2
1478.71	HP055	2
1487.90	HP056	2
1497.08	HP057	2
1506.27	HP058	2
1515.46	HP059	2
1524.64	HP060	2
1533.83	HP061	2
1543.02	HP062	2
1552.20	HP063	2
1561.39	HP064	2
1570.58	HP065	2
1579.76	HP066	2

8TH SECTIONS

STATION	PILE NO.	SERIES
10.30	HP075	3
18.57	HP076	3
26.83	HP077	3
35.10	HP078	3
43.37	HP079	3
51.63	HP080	3
59.90	HP081	3
68.17	HP082	3
77.95	HP083	3
84.88	HP084	3
93.15	HP085	3
101.41	HP086	3
109.68	HP087	3
117.95	HP088	3
126.21	HP089	3
134.48	HP090	3
142.75	HP091	3
151.01	HP092	3
159.28	HP093	3
167.55	HP094	3
175.81	HP095	3
184.08	HP096	3
192.35	HP097	3
200.61	HP098	3
208.88	HP099	3
217.15	HP100	3
225.41	HP101	3
233.68	HP102	3
241.95	HP103	3
250.21	HP104	3
258.48	HP105	3
266.75	HP106	3
275.01	HP107	3
283.28	HP108	3
291.55	HP109	3
299.81	HP110	3
308.08	HP111	3
316.35	HP112	3
324.61	HP113	3
332.88	HP114	3
341.15	HP115	3
349.41	HP116	3
357.68	HP117	3
360.31	HP118	3
368.58	HP119	3
376.84	HP120	3
385.11	HP121	3
393.38	HP122	3
401.64	HP123	3
409.91	HP124	3
BASELINE "B" OUTER WALL		

D SECTIONS

STATION	PILE NO.	SERIES
2181.17	HP139	4
2190.35	HP140	4
2199.54	HP141	4
2208.73	HP142	4
2217.91	HP143	4
2227.10	HP144	4
2236.28	HP145	4
2245.47	HP146	4
2254.66	HP147	4
2263.84	HP148	4
2273.03	HP149	4
2282.22	HP150	4
2291.40	HP151	4
2300.59	HP152	4
2309.78	HP153	4
2318.96	HP154	4
2328.15	HP155	4
2337.33	HP156	4
2346.52	HP157	4
2355.71	HP158	4
2364.89	HP159	4
2374.08	HP160	4
2383.27	HP161	4
2392.45	HP162	4
2401.64	HP163	4
2410.83	HP164	4
2420.01	HP165	4

C SECTIONS

STATION	PILE NO.	SERIES
2429.04	HP166	5
2438.22	HP167	5
2447.41	HP168	5
2456.60	HP169	5
2465.78	HP170	5
2474.97	HP171	5
2484.15	HP172	5
2493.34	HP173	5
2502.53	HP174	5
2511.71	HP175	5
2520.90	HP176	5
2530.09	HP177	5
2539.27	HP178	5
2548.03	HP179	6
2552.21	HP180	6
2561.40	HP181	6
2570.59	HP182	6
2579.77	HP183	6
2588.96	HP184	6
2598.14	HP185	6
2607.33	HP186	6
2616.52	HP187	6
2625.70	HP188	6
2634.89	HP189	6
2644.08	HP190	6
2653.26	HP191	6
2662.45	HP192	6
2671.64	HP193	6
2680.82	HP194	6
2690.01	HP195	6

NO.	DATE	REVISION	BY	APVD
DSGN	F ABREU	DR M REICHERT	CHK	APVD

©CH2M HILL 2009. ALL RIGHTS RESERVED.

MENOMINEE RIVER SEDIMENTT REMOVAL
VERTICAL BARRIER WALL BULKHEAD SUPPORT
TYCO FIRE PRODUCTS LP
MARINETTE, WISCONSIN

CH2MHILL®

CIVIL

SHEET PILE DETAILS AND SCHEDULES

REUSE OF DOCUMENTS: THIS DOCUMENT, AND THE IDEAS AND DESIGNS INCORPORATED HEREIN, AS AN INSTRUMENT OF PROFESSIONAL SERVICE, IS THE PROPERTY OF CH2M HILL AND IS NOT TO BE USED, IN WHOLE OR IN PART, FOR ANY OTHER PROJECT WITHOUT THE WRITTEN AUTHORIZATION OF CH2MHILL.

NO SCALE
VERIFY SCALE
BAR IS ONE INCH ON ORIGINAL DRAWING.
0 1"

DATE	AUGUST 2012
PROJ	438465
DWG	C-13
SHEET	15

PRELIMINARY

US EPA ARCHIVE DOCUMENT