GROUNDWATER INTERIM CORRECTIVE MEASURES DESIGN PLANS AND SPECIFICATIONS

RADIO MATERIALS CORPORATION
ATTICA, INDIANA

DISCLAIMER:
SOME FORMATTING CHANGES MAY HAVE OCCURRED WHEN THE ORIGINAL DOCUMENT WAS PRINTED TO PDF; HOWEVER, THE ORIGINAL CONTENT REMAINS UNCHANGED.

OCTOBER 2010
REF. NO. 019190 (41)

Prepared by:
Conestoga-Rovers & Associates

6520 Corporate Drive
Indianapolis, IN 46278

Office: (317) 291-7007
Fax: (317) 328-2666

web: http:\\www.CRAworld.com

TABLE OF CONTENTS

Page

1.0 INTRODUCTION 1
1.1 BACKGROUND 1
1.2 PURPOSE 1

2.0 DESIGN STRATEGY 3
2.1 GROUNDWATER FLOW 3
2.1.1 OVERBURDEN GROUNDWATER OCCURRENCE AND FLOW 3
2.1.2 BEDROCK GROUNDWATER OCCURRENCE AND FLOW 4
2.2 GROUNDWATER QUALITY 4
2.3 AQUIFER TESTING SUMMARY 4
2.4 TECHNOLOGY SELECTION 6
2.4.1 OVERBURDEN 6
2.4.1.1 AREA SOUTH OF SUMMIT STREET 6
2.4.1.2 AREA NORTH OF SUMMIT STREET 6
2.4.2 BEDROCK 7
2.4.3 GROUNDWATER TREATMENT 7
2.5 PREDESIGN BORINGS AND GEOTECHNICAL INVESTIGATION 7
2.6 TOPOGRAPHIC AND PROPERTY BOUNDARY SURVEY 8

3.0 TREATMENT TECHNOLOGY AND DESIGN COMPONENTS 10
3.1 GROUNDWATER EXTRACTION AND TREATMENT 10
3.2 DESIGN COMPONENTS/BASIS 10
3.2.1 OVERBURDEN EXTRACTION 11
3.2.2 BEDROCK EXTRACTION 12
3.2.3 GROUNDWATER TREATMENT 13
3.3 IN SITU AS/SVE TECHNOLOGY 14
3.4 TROUBLE SHOOTING 15
3.4.1 GROUNDWATER EXTRACTION AND TREATMENT SYSTEM 15
3.4.2 AS/SVE SYSTEM 16

4.0 PERMIT REQUIREMENTS 17
4.1 POTENTIAL EMISSIONS EVALUATION 17
4.2 PERMIT-TO-CONSTRUCT 19
4.3 LOCAL PERMITS 19
4.4 DISCHARGE PERMIT 20

5.0 OPERATION AND MAINTENANCE MANUAL 21

6.0 MONITORING PLAN 22

7.0 SCHEDULE 23

8.0 FINAL DESIGN DOCUMENTS 24

LIST OF FIGURES
(Following Report)

FIGURE 1.1 SITE LOCATION

FIGURE 1.2 SITE PLAN WITH SWMUS AND AOCS

FIGURE 2.1 PIEZOMETER AND MONITORING WELL LOCATIONS

FIGURE 2.2 OVERBURDEN GROUNDWATER CONTOURS – JULY 6, 2009

FIGURE 2.3 BEDROCK GROUNDWATER CONTOURS – JULY 6, 2009

FIGURE 2.4 SUMMARY OF VOC DETECTIONS ABOVE THE RDCLs IN THE OVERBURDEN AQUIFER (SEPTEMBER 2008-JULY 2009)

FIGURE 2.5 SUMMARY OF VOC DETECTIONS ABOVE THE RDCLs IN THE BEDROCK AQUIFER (SEPTEMBER 2008-JULY 2009)

FIGURE 2.6 TOPOGRAPHIC SURVEY JULY 2009

FIGURE 7.1 GROUNDWATER ICM CONSTRUCTION SCHEDULE

LIST OF TABLES
(Following Report)

TABLE 3.1 EXISTING AND PROPOSED OVERBURDEN EXTRACTION WELL DETAILS

TABLE 4.1 POTENTIAL EMISSIONS SUMMARY

TABLE 4.2 POTENTIAL EMISSIONS EVALUATION EXISTING SVE SYSTEMS

TABLE 4.3 POTENTIAL EMISSIONS EVALUATION FUTURE GROUNDWATER EXTRACTION AND TREATMENT SYSTEM SOUTH OF SUMMIT STREET

TABLE 4.4 POTENTIAL EMISSIONS EVALUATION FUTURE AS/SVE SYSTEM NORTH OF SUMMIT STREET

LIST OF APPENDICES
(Following Report)

APPENDIX A STRATIGRAPHIC LOGS

APPENDIX B GRAIN-SIZE CURVES

APPENDIX C GEOTECHNICAL REPORT

APPENDIX D PROPERTY SURVEY DATA

APPENDIX E NPDES PERMIT NO. IN0063657

APPENDIX F O&M MANUAL GROUNDWATER EXTRACTION AND TREATMENT SYSTEM

APPENDIX G O&M MANUAL AIR SPARGE/SOIL VAPOR EXTRACTION SYSTEM

APPENDIX H MONITORING PLAN

APPENDIX I FINAL DESIGN AND SPECIFICATIONS

1.0 INTRODUCTION

1.1 BACKGROUND

The former Radio Materials Corporation (RMC) manufacturing facility (United States Environmental Protection Agency (U.S. EPA) identification number IND005477021) is located in west-central Indiana at 1095 East Summit Street in the eastern portion of the City of Attica, in Fountain County, Section 5, Township 21 North, Range 7 West (Site). U.S. EPA Region 5 entered into a Resource Conservation and Recovery Act (RCRA) 3008(h) Consent Order No. IND 005 477 021 with RMC, which requires the investigation and remediation of various areas of the RMC property. Figure 1.1 provides a Site location map, and Figure 1.2 depicts the RMC Site and the locations of Solid Waste Management Units (SWMUs) and Areas of Concern (AOCs).

A multi-phase RCRA Facility Investigation (RFI) is in progress at RMC that has included the investigation of environmental media, including soil and groundwater. Numerous overburden monitoring wells, bedrock monitoring wells, and piezometers have been installed and monitored frequently to determine hydrogeological conditions at and around the Site. The RFI and routine groundwater monitoring results indicate that the primary analytes detected in groundwater are several volatile organic compounds (VOCs), including tetrachloroethene (PCE), trichloroethene (TCE), cis-1,2-dichloroethene (cDCE), and, to a more limited extent, vinyl chloride. These VOCs have been detected in both the overburden and bedrock aquifers beneath the Site and extend towards the west-northwest, parallel to the direction of groundwater flow.

1.2 PURPOSE

In a letter dated March 17, 2009, U.S. EPA requested that a Groundwater Interim Corrective Measures (ICM) Work Plan (Work Plan) be prepared and submitted. Conestoga-Rovers & Associates (CRA) prepared and submitted that Work Plan on August 31, 2009. U.S. EPA subsequently reviewed and then approved the Work Plan in a letter dated October 15, 2009.

The Work Plan was focused on the process for addressing the VOCs in groundwater that appear to be associated with SWMU 5 (past disposal area), AOC 2 (in particular, three 6,000-gallon underground storage tanks [USTS] J, K, and L, located on the east side of the main building), and SWMU 11 (former PCE vapor degreaser located in the main plant building) on the RMC property. Groundwater impacts associated with SWMUs 5

and 11 and AOC 2 (particularly USTs J, K, and L) appear to have the potential to migrate towards developed areas of the City of Attica.

The objective of the groundwater ICMs is to minimize the potential downgradient migration of VOCs beyond the Site and towards developed areas while the final groundwater corrective action is evaluated as part of the RFI and corrective measures study (CMS). The groundwater ICMs are designed to work in conjunction with in situ chemical oxidation (ISCO) and soil vapor extraction (SVE) ICMs that have already been implemented on Site to reduce potential leaching of VOCs to groundwater. Recent groundwater monitoring results confirm the effectiveness of the ISCO and SVE corrective measures implemented on Site. Together, these ICMs provide a long-term solution by removing and controlling the potential migration of VOCs from the RMC Site.

The next step in the process was to develop the Groundwater ICMs Design Plans and Specifications to implement the treatment technologies selected for the Design Program in the Work Plan.

The Design Program included the following:

- Design Plans and Specifications
- Operations and Maintenance Plan
- Construction Schedule
- Final Design Documents

This Groundwater ICM Design Plan and Specifications is being submitted to the U.S. EPA to document the first three required elements of the Design Program listed above, formatted consistent with the 1999 U.S. EPA Region V RCRA 3008(h) Consent Order No. IND 005 477 021 issued to Radio Materials Corporation.

2.0 DESIGN STRATEGY

The objective of the groundwater ICMs is to minimize the potential downgradient migration of VOCs beyond the Site and towards developed areas while the final groundwater corrective action is evaluated as part of the RFI/CMS.

2.1 GROUNDWATER FLOW

Groundwater at the Site has been investigated through the installation of numerous overburden monitoring wells, bedrock monitoring wells, and piezometers. Monitoring well and piezometer locations are shown on Figure 2.1. Groundwater flow beneath the Site has been defined by over 20 hydraulic monitoring events beginning in October 2003 and continuing to the present.

2.1.1 OVERBURDEN GROUNDWATER OCCURRENCE AND FLOW

In general, groundwater occurs in the overburden deposits at depths ranging from less than 10 feet below ground surface (bgs) to approximately 60 feet bgs. Near the Site, overburden saturation tends to occur within a few feet of the top of bedrock. Overburden groundwater is deepest where the overburden deposits are thickest (generally, to the south of Summit Street) and shallowest where overburden deposits are thin (generally, to the north of Summit Street). Overburden groundwater was absent during drilling activities performed at locations BW-16, BW-18, and BW-20, and overburden monitoring wells were not installed at these locations.

Figure 2.2 illustrates groundwater flow in the overburden deposits using the hydraulic monitoring data collected in July 2009, which is typical of numerous other monitoring events completed at the Site. The increased spacing between the groundwater contours on Site south of Summit Street indicates that the horizontal hydraulic gradient in the overburden in this area is relatively flat. The overburden horizontal hydraulic gradient south of Summit Street as measured during July 2009 from OB-1 to OB-34 (located approximately 1,130 feet apart in a direction parallel to the direction of groundwater flow) was approximately 0.004 ft/ft.

To the north and west of the Site, the horizontal hydraulic gradient observed in the overburden deposits becomes steeper, approximately 0.023 ft/ft as measured from OB-14 to OB-37 (separated by a distance of approximately 1,140 feet). This information

indicates that overburden groundwater flow is controlled, at least in part, by the topography of the bedrock surface, which also falls off to the northwest of the Site.

2.1.2 BEDROCK GROUNDWATER OCCURRENCE AND FLOW

Figure 2.3 illustrates the bedrock groundwater characteristics in July 2009. Similar to the overburden, the horizontal hydraulic gradient is much flatter on the RMC property south of Summit Street and is steeper to the west and northwest. In July 2009, the horizontal hydraulic gradient in the bedrock on Site to the south of Summit Street (as measured from BW-01 to BW-14, a distance of approximately 1,150 feet) is approximately 0.0001 ft/ft, which is much flatter than the overburden hydraulic gradient in this same area.

2.2 GROUNDWATER QUALITY

The VOCs in groundwater primarily consist of dissolved PCE, TCE, and cDCE. The groundwater VOC impacts in the overburden and bedrock units extend towards the west-northwest, parallel to the direction of groundwater flow as shown on Figures 2.4 and 2.5, respectively. The bedrock groundwater downgradient of SWMU 5 does not exhibit the same magnitude of VOC concentrations as were observed in the overburden groundwater. cDCE is the VOC exhibiting the highest concentrations downgradient of SWMU 5, comprising 70 percent or more of the total VOC concentration in the bedrock groundwater. Additionally, vinyl chloride is detected downgradient of SWMU 5 more frequently and at higher concentrations in the bedrock groundwater than in the overburden groundwater. Farther downgradient at bedrock monitoring well BW-07, vinyl chloride comprises a larger percentage of the total VOC concentration. These data suggest that the parent compounds (TCE and PCE) are undergoing natural dechlorination with depth and distance from the main plant area.

2.3 AQUIFER TESTING SUMMARY

In 2008, aquifer testing was conducted at the Site to evaluate groundwater extraction as a containment alternative. The scope of work for the aquifer testing consisted of the following major tasks:

- installation and sampling of a vertical aquifer sampling (VAS) boring

- installation and development of test extraction wells and hydraulic monitoring piezometers
- completion of overburden and bedrock step-drawdown tests
- collection of antecedent water level data prior to each of the constant-rate pumping tests
- completion of overburden and bedrock constant-rate pumping tests
- completion of overburden and bedrock recovery tests
- collection of groundwater quality samples from the extraction wells during the pumping tests
- evaluation of the collected data

Detailed results from the aquifer testing were documented in the Aquifer Testing Report dated December 2008, which was subsequently approved by U.S. EPA in a letter dated March 17, 2009.

Based on the evaluation of the collected aquifer test data, groundwater extraction is a viable corrective action to minimize further potential downgradient migration of VOCs in groundwater from the Site. However, alternative containment and treatment technologies could be utilized north of Summit Street, where the depth to groundwater and the top of bedrock are significantly shallower due to a steep drop in topography from south to north resulting from the thinning of the overburden deposits.

South of Summit Street, the depth to groundwater is nominally 60 feet bgs. North of Summit Street, the depth to groundwater is substantially less (generally less than 15 feet) due to the steep drop in topographic elevation. The substantially shallower depth to bedrock north of Summit Street (generally less than 20 feet) allowed for the evaluation of horizontal collection technology and of other in situ treatment technologies (i.e., permeable reactive barrier technology), which would not be effective or economical for the treatment of deeper overburden groundwater south of Summit Street.

2.4 TECHNOLOGY SELECTION

2.4.1 OVERBURDEN

2.4.1.1 AREA SOUTH OF SUMMIT STREET

Due to the depth to groundwater and top of bedrock in the area south of Summit Street, the ICM for this portion of the overburden VOC plume will consist of the installation and operation of vertical extraction wells. The extracted groundwater will be treated and then discharged to Riley Lake under a National Pollutant Discharge Elimination System (NPDES) permit.

This groundwater extraction and treatment remedy is a proven technology that meets the evaluation criteria. Groundwater extraction and treatment:

- provides a long-term reliable and effective remedy
- reduces the toxicity, mobility, and volume of VOCs in treated groundwater
- provides an effective short-term remedy that is easily designed and implemented and poses little risk to the surrounding community during implementation
- provides a proven technology that is readily implementable and does not require additional pre-design studies
- requires a moderate amount of capital costs as well as a moderate to high amount of operation and maintenance costs

The saturated thickness in the overburden unit within this area is limited. The limited overburden saturated thickness and heterogeneity within the overburden unit reduces the radius of influence that can be achieved using vertical pumping wells. However, the limited radius of influence was addressed through the installation of additional vertical wells, thus reducing the distance between extraction wells in the network to 60 feet.

2.4.1.2 AREA NORTH OF SUMMIT STREET

Since the depths to groundwater and the top of bedrock in the area north of Summit Street are relatively shallow (generally, less than 30 feet), an in situ remedy consisting of air sparging/soil vapor extraction (AS/SVE) was selected as the preferred option for the following reasons:

- provides a long-term reliable and effective remedy

- reduces the toxicity, mobility, and volume of VOCs in treated groundwater
- provides an effective remedy that is easily designed and implemented and poses little risk to the surrounding community during implementation
- effective in the short term requiring no lag time between installation and peak operation
- provides a proven technology that is readily implementable and does not require additional pre-design studies
- requires a moderate amount of capital costs, as well as moderate operation and maintenance costs

2.4.2 BEDROCK

An evaluation of potential remedial alternatives demonstrated that capture within the bedrock aquifer can be obtained by pumping one extraction well at a location south of Summit Street at a relatively low rate. Therefore, the ICM for the bedrock groundwater will consist of the operation of one vertical extraction well. The extracted groundwater will be treated and then discharged to Riley Lake under an NPDES permit.

This groundwater extraction and treatment remedy is a proven technology that meets the evaluation criteria noted in the Section 2.4.1.1.

2.4.3 GROUNDWATER TREATMENT

Air stripping is the technology that will be used for treating extracted groundwater containing VOCs from the overburden and bedrock groundwater extraction networks. Air stripping is a proven and effective technology for removing VOCs from groundwater. Additionally, air stripping technology is a process that requires minimal ongoing operation and maintenance (O&M) activity, particularly in circumstances when the water hardness is not excessive. Based on the analytical data obtained during aquifer testing, excessive scaling of the packing material is not expected.

2.5 PREDESIGN BORINGS AND GEOTECHNICAL INVESTIGATION

A series of soils borings were installed at the Site on November 17 and 18, 2009, to collect the geotechnical and stratigraphic information necessary to finalize the design

component of the ICMs. The location of these design soil borings are illustrated on Figure 2.6, and the soil boring stratigraphic logs are provided in Appendix A.

DESIGN BORINGS

The design related soil borings consisted of the installation of nine soil borings DB-1 through DB-9, spaced at approximately 100-foot intervals along the proposed route of the AS/SVE trench. This soil boring program was completed to determine the depth to bedrock more precisely along the proposed line of the AS/SVE trench and to further characterize the soil stratigraphy along the trench. The soil borings were advanced using direct-push technology (DPT) drilling methods. Continuous soil samples were collected until bedrock refusal was encountered. Soil samples were retained from the saturated zone at several of the soil borings and submitted for grain-size analysis at CRA's laboratory in Plymouth, Michigan. The grain-size analysis curves are provided in Appendix B. The location and elevations of the soil borings were surveyed for horizontal and vertical control.

GEOTECHNICAL INVESTIGATION

Geotechnical soil borings were installed to verify that the subsurface soil at the location selected for groundwater treatment system building (DB-12 and DB-13) and the location selected for the AS/SVE equipment building (DB-10 and DB-11) had adequate bearing strength to support the proposed structures. The soil borings were advanced using DPT drilling methods, and continuous soil samples were collected to a depth of 16 feet below grade. Soil samples were retained from each sample interval and submitted for geotechnical analysis at CRA's laboratory in Plymouth, Michigan. The location and elevations of the soil borings were surveyed for horizontal and vertical control. The geotechnical report is presented in Appendix C.

2.6 TOPOGRAPHIC AND PROPERTY BOUNDARY SURVEY

CRA completed a topographic survey at 1-foot intervals of the areas to the north and south of Summit Street where the ICMs are to be installed. The topographic survey was completed to aid in the design of the ICMs and included existing features present on the properties. The topographic survey map is provided on Figure 2.6. Information on the property boundaries of land parcels surrounding where the ICMs are being installed was obtained from the Fountain County Assessor's Office. Miller Surveying Inc. of Noblesville, Indiana, was commissioned to perform a boundary survey of the few portions of this area where the Assessor's Office had limited information. A copy of the

property survey is provided in Appendix D. The property boundary survey was completed to determine if any access agreements were needed to construct the ICMs. Based on the survey, the only access agreement that will be needed is with the City of Attica.

3.0 TREATMENT TECHNOLOGY AND DESIGN COMPONENTS

3.1 GROUNDWATER EXTRACTION AND TREATMENT

Groundwater extraction and treatment is the selected ICM in the area south of Summit Street to minimize further downgradient migration of VOCs in overburden groundwater. Groundwater extraction and treatment is also the selected ICM for the bedrock aquifer. Extracted groundwater will be treated utilizing air stripping methods prior to discharge to Riley Lake under an NPDES permit.

The groundwater extraction and treatment system design includes the following components:

- construction Site layout and grading plan
- extraction well and piezometer network plan
- extraction well underground piping details to connect to the treatment system
- the air stripper treatment system and associated components
- piping, components, and associated discharge transfer pumps
- system controller, associated controls, and electrical components
- heated, ventilated, and lighted building to house the treatment system

3.2 DESIGN COMPONENTS/BASIS

Hydrogeologic data utilized to design the groundwater extraction and treatment systems were obtained from aquifer tests completed on both the overburden aquifer and the bedrock aquifer, and results from the aquifer testing were documented in the Aquifer Testing Report dated December 2008. The design criteria, system component, and design calculations were documented in the Work Plan.

The groundwater extraction and treatment ICM is comprised of 15 overburden extraction wells (EW-01 through EW-15) and one bedrock extraction well (BEW-01). The extraction wells will be connected to an underground piping system that will convey the extracted groundwater to the groundwater treatment building where the air stripper will be located. The extraction wells will be metered and valved to monitor and control the flow rate at each well.

3.2.1 OVERBURDEN EXTRACTION

The overburden extraction well system is designed to intercept the groundwater flow that conveys dissolved-phase VOCs to the west-northwest. The saturated thickness of the overburden aquifer within this area ranges from only a few feet near monitoring well OB-7 to just over 10 feet near monitoring well OB-34. Due to the limited overburden aquifer thickness in this area, additional extraction wells were required to provide capture. Evaluation of the overburden pumping test data indicated that the spacing between the overburden extraction wells should be set at approximately 60 feet. This spacing requires each well to have a radius of capture of 30 feet and results in the need to install 15 extraction wells to provide hydraulic capture.

The newly installed extraction wells will be 6 inches in diameter and will be constructed with a 4-foot sump at the base of the well below the well screen. The base of the well screen will be set at or just below the bedrock/overburden interface. The extraction well pump will be set within the sump. This design feature will allow additional drawdown within the overburden extraction wells. The proposed extraction well screen lengths will be between 2.5 feet and 5 feet, depending upon the thickness of the aquifer at each location (see Table 3.1). These screen lengths are recommended to minimize the potential for drawdown within the screened interval, thereby reducing the potential for iron fouling of the screen. However, in the event that iron fouling does occur, the extraction well screens could be jetted and cleaned using conventional methods. During extraction well installation, formation samples will be collected from the screened intervals and submitted for grain-size analysis. The grain-size data will be evaluated to optimize the design of the sand pack and slot size for the extraction well screens.

An electrical submersible pump will be installed in each extraction well. The specified pumps have the capacity to pump up to 10 gallons per minute (gpm) at 110 feet of total dynamic head (TDH) in all extraction wells except EW-14 and EW-15, which will the capacity to pump up to 6 gpm at 100 feet of TDH. The flow rates of the extraction wells will be optimized to ensure capture is maintained, but are expected to be between 2 and 4 gpm from each extraction well to obtain a capture radius of 30 feet. A pressure transducer connected to a data logger will be installed in each extraction well to monitor drawdown within the wells. This equipment will be connected to the process logic control (PLC) system that is programmed to shut the pump off for a period of time if the drawdown in the well nears the level of the pump and to restart the pump when the water level recovers in the well.

The discharge from the electrical submersible pumps will be transmitted to the treatment building in individual underground pipes located within a common trench. A

flow meter and control valve will be installed on each discharge line entering the building to monitor and control the flow rate at each well. The individual lines will discharge into an equalization tank located in the treatment building.

The conservative spacing between and the design of the extraction wells allows the overall system to be flexible and allows individual well pumping rates to be adjusted to optimize capture based on hydraulic and groundwater analytical data.

3.2.2 BEDROCK EXTRACTION

The bedrock extraction well system is also designed to intercept the groundwater flow to the west-northwest from the SWMU 5 and SWMU 11/AOC 2 areas located south of Summit Street. Based on hydraulic calculations presented in the Work Plan, one centrally located bedrock extraction well (BEW-01) will be sufficient to provide hydraulic capture. Calculations provided in the Work Plan indicate that the bedrock groundwater extraction well would need to extract groundwater at a flow rate of between 6.5 and 13 gpm to provide hydraulic capture.

The bedrock extraction well will be double cased and constructed with an 6-inch diameter steel surface casing set and grouted into the upper bedrock surface to seal off the overburden stratigraphic unit. The open bedrock borehole below the surface casing will be nominally just less than 6 inches in diameter. To ensure that the borehole remains open, a 4-inch diameter PVC well casing and screen will be lowered into the borehole. A K-packer assembly will be used as an adapter between the 6-inch surface casing and the 4-inch well materials. The extraction well screen will be placed within the sandstone stratigraphic unit.

An electrical submersible pump will be installed in the extraction well. The specified pump has the capacity to pump 25 gpm at 110 feet of TDH. The flow rates of the bedrock extraction well will be optimized to ensure capture is maintained, but is expected to be between 6.5 and 13 gpm. A pressure transducer connected to a data logger will be installed in the extraction well to monitor drawdown within the well. This equipment will be connected to the PLC system that is programmed to shut the pump off for a period of time if the drawdown in the well nears the level of the pump and to restart the pump when the water level recovers in the well. The discharge line from the electrical submersible pump will be transmitted using the same method as that described for the overburden extraction wells herein above.

3.2.3 GROUNDWATER TREATMENT

As detailed in the Work Plan, air stripping technology was the groundwater treatment technology selected to treat the extracted groundwater. The specified air stripper has an operational flow rate range of approximately 6 to 425 gpm. This range provides a great deal of flexibility to address potentially variable flows from the overburden and bedrock extraction wells. However, the system is expected to operate nominally at approximately 100 gallons per minute.

The air stripper model was specified using the expected flows and worst-case estimates of VOC concentrations in the influent groundwater. The highest concentrations of VOCs observed at overburden extraction well EW-1 were used to identify the appropriate air stripper. Based on this evaluation, the system will exceed the discharge criteria specified in the NPDES permit, treating PCE, TCE, and vinyl chloride to concentrations below 1 microgram per liter (µg/L) and cDCE to concentrations of 3 µg/L. Based on the groundwater analytical results obtained during the pumping test, excessive scaling of the air stripper is not anticipated. Therefore, pretreatment of the groundwater for the proper operation of the air stripper is not necessary.

The extraction well discharge pipes will be routed into a 5,500 gallon equalization tank. Level controls will be installed in the equalization tank that will be connected and controlled by the PLC to pump the contents of the tank directly into the air-stripper unit. The air stripper discharge will be routed directly to Riley Lake, via an 8-inch diameter underground gravity drain line. The temperature of the extracted groundwater will be nominally around 55 degrees year round. Treatment of the groundwater through the air stripper system will tend to bring the groundwater temperature towards atmospheric temperature. During the winter months, the treatment building will be heated to prevent the temperature of the water from falling below the freezing point.

The treated groundwater will then flow through an approximately 200-foot length of pipe where it will be discharged to Riley Lake, which is a 1.8-acre on-Site man-made pond that historically was used as a fire water reservoir. At any given time, the surface water volume in Riley Lake will be approximately 95 percent greater than the average daily flow of treated groundwater into the lake, so any difference in temperature between the lake and the discharged groundwater will be equalized.

During periods of time when the accumulation of precipitation and the discharge of groundwater exceed evapotranspiration and infiltration, overflow from Riley Lake discharges to the south through an approximately 700-foot length of 24-inch diameter outfall pipe to a drainage channel that leads to an ephemeral stream in Ravine Park. On

October 27, 2009, a video camera was used to assess the entire length of this existing 24-inch outfall pipe to ensure that it was open. This inspection did not identify any obstructions or damage to the pipe that would prevent the pipe from effectively conveying the overflow from Riley Lake.

The treatment system has been designed to require a minimal amount of operational and maintenance activities. PLC controls and automatic shut-offs will be installed, and the operation of the system will be monitored remotely. However, regular system inspections are scheduled to be performed as part of the operation and maintenance program.

3.3 IN SITU AS/SVE TECHNOLOGY

For the area north of Summit Street, in situ AS/SVE is the selected ICM to minimize further potential downgradient migration of VOCs in overburden groundwater. The design includes the installation of a trench north of Summit Street to approximately Taylor Street. The locations for this sparge trench and the related system components have been determined by field survey and land survey.

The AS/SVE system design includes the following components:

- construction Site layout, grading plan, and cross-section plan
- horizontal sparging and vapor extraction piping plan
- air sparging and vapor extraction components including blower motors and housing
- system controls, associated controls, and electrical components
- heated, ventilated, and lighted building to house the blower systems

The AS/SVE system has been designed to minimize energy consumption while still meeting the ICM objectives. The AS/SVE trench will consist of eight segments that will be connected to the AS/SVE equipment by an underground piping network. Sheet pilling will be driven between each section of the system and keyed into the underlying bedrock. The sheet pilling design component of the AS/SVE system is designed to minimize the movement of groundwater between segments of the trench and to funnel groundwater into the trench segments for the most effective treatment.

VOC-impacted groundwater will enter the upgradient (eastern) portion of the treatment trench. Air will be sparged into the base of the overburden aquifer in each trench

segment through horizontal perforated air sparge piping designed to provide equal distribution of air along the entire length of the pipe and disperse the air effectively. The sparge air will be generated by one of two 50-horsepower (HP) blowers that will pressurize the air sparge piping and convey the air to the perforated piping present at the base of each segment of the treatment trench. The trench backfill material has been engineered to permit thorough diffusion of the sparge air and minimize channeling in the treatment trench segments. The sparge air will travel up from the base of the trench through the saturated engineered backfill and strip VOCs from the water column within the trench. The sparge air containing the stripped VOCs will travel upwards and enter the unsaturated portion of the trench where it will be removed by the SVE system and vented to the atmosphere near the treatment building. The treated groundwater will exit the downgradient portion of the treatment trench.

The designed minimum trench width of 2 feet provides a groundwater retention time within the trench of greater than 24 hours. It is possible, therefore, to rotate the operation of the different segments of the AS/SVE trench so that different segments are operated at different times throughout the day. The initial design sequence is to operate four sections of the trench for a period of 12 hours. Then, operation will be rotated to the four other segments of the trench. This operation will be controlled by the PLC program. The rotation of trench segment operation will allow smaller horsepower blowers to be used for the application that will use less energy and provide quieter operation to minimize the potential for nuisance to area residences.

An SVE system, consisting of a perforated horizontal pipe, will be installed above the groundwater level within the trench to remove the sparged vapors from the trench and prevent lateral subsurface movement of the VOC-containing vapors. Two 15-HP SVE blowers will convey the extracted vapors back to the equipment building, where they will be vented to the atmosphere after being run through a moisture separator and a silencer to quiet the exhaust noise. The SVE blowers will be designed to extract 1.5 times the volume of air from each segment of trench that the air sparge system is designed to inject to ensure adequate removal of VOC-containing vapors from the treatment trench. The equipment building will be sound insulated to minimize blower noise levels.

3.4 TROUBLE SHOOTING

3.4.1 GROUNDWATER EXTRACTION AND TREATMENT SYSTEM

The effectiveness of the groundwater extraction system at providing capture will be monitored by measuring water levels/groundwater elevations at a series of new and

existing monitoring wells and piezometers as discussed in the Monitoring Plan (see Section 6.0). The flow rates of the extraction wells will be optimized to ensure capture is maintained. The long-term effectiveness of the ICM will be monitored by the collection of groundwater samples from a network of new and existing monitoring wells and piezometers located both upgradient and downgradient of the extraction wells. The design of the groundwater extraction system allows the overall system to be flexible and allows individual well pumping rates to be adjusted to optimize capture based on hydraulic and groundwater analytical data. If future monitoring data indicates that hydraulic capture is not occurring, the groundwater extraction network will be modified. Possible modifications could include adjustment of the pumping rates or, if required, the installation of additional extraction wells.

The effectiveness of the groundwater treatment system at providing treatment of the extracted groundwater prior to discharge will be monitored by the collection and analysis of effluent water samples in accordance with the NPDES permit. If future effluent monitoring data indicates that the discharge criteria specified in the NPDES permit are not being met, the treatment system can be modified/adjusted. Possible modifications could include adjusting the air to water ratios within the air stripper or the installation of a pre- or post-stripper water treatment component. Furthermore, if suspended particles or scaling becomes an operational issue, the treatment system may be modified to include possible pre-filtration or chemical sequestering/pH adjustment.

3.4.2 AS/SVE SYSTEM

The effectiveness of the AS/SVE system will be monitored by measuring water levels/groundwater elevations at a series of new and existing monitoring wells and piezometers, and by measuring vacuum at monitoring probes installed within the trench. Furthermore, the long term effectiveness of the ICM will be monitored by the collection of groundwater samples and measuring dissolved oxygen levels from a network of new and existing monitoring wells and piezometers located both upgradient and downgradient of the AS/SVE trench. If monitoring data indicates that adequate treatment is not occurring within the AS/SVE trench, the system can be modified. Possible modifications could include increasing/adjusting air flow rates in segments of the trench, increasing/adjusting air injection pressures, increasing the duration of the operational periods for sections of the trench, installing larger blower units, or the installation of additional vertical air sparge wells.

4.0 PERMIT REQUIREMENTS

4.1 POTENTIAL EMISSIONS EVALUATION

CRA has evaluated the potential to emit (PTE) from the operating SWMU 5 and 11 and AOC 2 SVE systems and the proposed groundwater ICMs. A summary of the PTE from these systems is provided on Table 4.1. Respectively, Tables 4.2 through 4.4 provide PTE calculations for the following: (1) existing SVE systems (i.e., SWMU 5 SVE system, SWMU 11 SVE system, and SWMU 1 and 2 SVE system); (2) the proposed groundwater and treatment system using air stripping technology south of Summit Street; and (3) the proposed in situ air sparge/soil vapor extraction (AS/SVE) system north of Summit Street.

CRA determined the PTE using the online guidance as of September 2010 in the Indiana Department of Environmental Management's (IDEM's) Permit Guide, specifically the definition of PTE. The IDEM Permit Guide indicates the following: "PTE is the total potential emissions of any regulated pollutant which could result from operating under a "worst case operating scenario", running twenty-four hours a day (with no pollution control equipment), 365 days a year at full capacity."

PTE FROM OPERATING SVE SYSTEMS

Before construction of the existing SVE systems, the PTE was estimated based on the estimated mass of VOCs in soil and the estimated mass of soil in the specific SWMUs. The SVE systems have been operational since 2008, and actual air emissions data are now available to calculate the PTE from the SVE systems. Additionally, because VOC mass has been removed from the SWMUs since the start-up of the SVE systems (and VOC mass is not being added to the SWMUs), the PTE for these systems has declined during their operational lifetimes.

To determine the current PTE for the SWMU 5 and SWMU 11 SVE systems, the analytical data from the two most recent effluent air sampling events for cDCE, PCE, and TCE, conducted in September 2009 and August 2010, were used to calculate the PTE. These compounds (cDCE, PCE, and TCE) were the only detected parameters from these sampling events. For the SWMU 1/2 SVE system, the analytical data from the two most recent effluent air sampling events for the same analytes, conducted in July 2009 and September 2009, were used to determine the PTE. The effluent air analytical data from the SVE systems have decreased over time. Thus, it is appropriate to average the analytical results from 2009 and 2010 for each system. This results in an overestimate of current emissions, which is a conservative approach to determining the PTE.

Below is a list of additional conservative assumptions that were used to determine PTE of the existing SVE systems:

- A maximum air velocity of 5,700 feet per minute (fpm) for the SWMU 5 SVE system was used (the highest air velocity recorded by the SCADA control system has been 5,678 fpm).
- A maximum air velocity of 3,200 fpm for the SWMU 11 SVE system was used (the highest air velocity recorded by the SCADA control system has been 3,180 fpm).
- A maximum air velocity of 8,700 fpm for the SWMU 1/2 SVE system was used (this is the highest air velocity observed for this system).
- The SVE systems operate 24 hours per day and 365 days per year.

PTE FROM THE GROUNDWATER EXTRACTION AND TREATMENT SYSTEM

A blended groundwater concentration was used to determine the PTE for the extraction and treatment system. The highest observed concentrations of cDCE, PCE, and TCE in from overburden extraction well EW-1 and bedrock extraction well BW-14A during the aquifer pump test conducted in February and March 2008 were used to determine the PTE. The highest concentrations occurred during the first hour of the pump test and the concentrations decreased over time. Therefore, selecting the initial concentrations is a conservative approach. The blended concentration was developed by adjusting the concentrations based on the expected approximately 80:20 blend of overburden and bedrock groundwater into the system.

Below is a list of additional conservative assumptions that were used to determine the PTE of the air stripper:

- The maximum water flow rate through the air stripper will be 425 gallons per minute (gpm).
- The air stripper will operate 24 hours per day and 365 days per year.
- The air stripper will transfer 100 percent of the cDCE, PCE, and TCE in the water stream undergoing treatment to an air stream.

PTE FROM THE PROPOSED AS/SVE SYSTEM

Analytical data from a groundwater sample collected from monitoring well OB-32 (April 2009) was used to estimate the PTE.

Below is a list of conservative assumptions that were used to determine the PTE of the AS/SVE system:

- The maximum exhaust rate of SVE blower(s) will be 900 standard cubic feet per minute (scfm).
- The AS/SVE System will operate 24 hours per day and 365 days per year.
- The AS/SVE System will transfer 100 percent of the cDCE, PCE, and TCE in the water stream undergoing treatment to an air stream.

COMBINED PTE

To determine potential Indiana air permitting obligations, CRA totaled the PTEs of the existing and the proposed remediation systems. In summary, the total PTE from all of the existing and proposed remedial systems is 4.6 tons per year (tpy) of VOCs, 3.8 tpy of the highest single hazardous air pollutant (HAP) (i.e., TCE), and 5.2 tpy of combined HAPs. These values are well below the Indiana permitting thresholds of 10 tpy of VOCs, 10 tpy of the highest single HAP, and 25 tpy of combined HAPs. Therefore, the air stripper and AS/SVE system do not require Indiana air permitting in accordance with 326 IAC 2.

4.2 PERMIT-TO-CONSTRUCT

Per 327 IAC 3-2-4(8), a construction permit for a water pollution treatment/control facility is not required for a groundwater remediation system utilizing either carbon absorption or air stripping as the mode of treatment.

4.3 LOCAL PERMITS

The selected construction contractor will be responsible for obtaining any necessary local permits required for construction of the treatment system building and components and coordinating any necessary inspections during system construction.

4.4 DISCHARGE PERMIT

Pursuant to 327 IAC 5, the groundwater extraction and treatment system will require an industrial NPDES permit because any discharge of pollutants into waters of the State of Indiana as a point source discharge is prohibited unless in conformity with a valid NPDES permit obtained prior to the discharge. IDEM issued the NPDES permit (No. IN0063657) on June 30, 2010 (Appendix E).

5.0 OPERATION AND MAINTENANCE MANUAL

CRA has developed draft O&M manuals for the treatment systems which address the following:

- Equipment start-up and operator training
- Description of equipment
- Description of normal operation and maintenance
- Description and schedule of routine monitoring
- Potential O&M issues and common remedies

The O&M manual for the groundwater extraction and treatment system is provided in Appendix F, and O&M manual for the AS/SVE system is provided in Appendix G. The O&M manuals will be updated and finalized following construction of the ICM.

6.0 MONITORING PLAN

A Monitoring Plan has been developed to evaluate the effectiveness of the ICMs. The Monitoring Plan includes the following components:

- Hydraulic monitoring
- Groundwater quality monitoring
- Treatment system effluent monitoring

The Monitoring Plan is provided in Appendix H.

7.0 SCHEDULE

A tentative construction schedule is provided on Figure 7.1. This schedule will be updated following receipt of bids and selection of a construction contractor.

8.0 FINAL DESIGN DOCUMENTS

The Final Design Documents, including the plans and specifications, are provided in Appendix I.

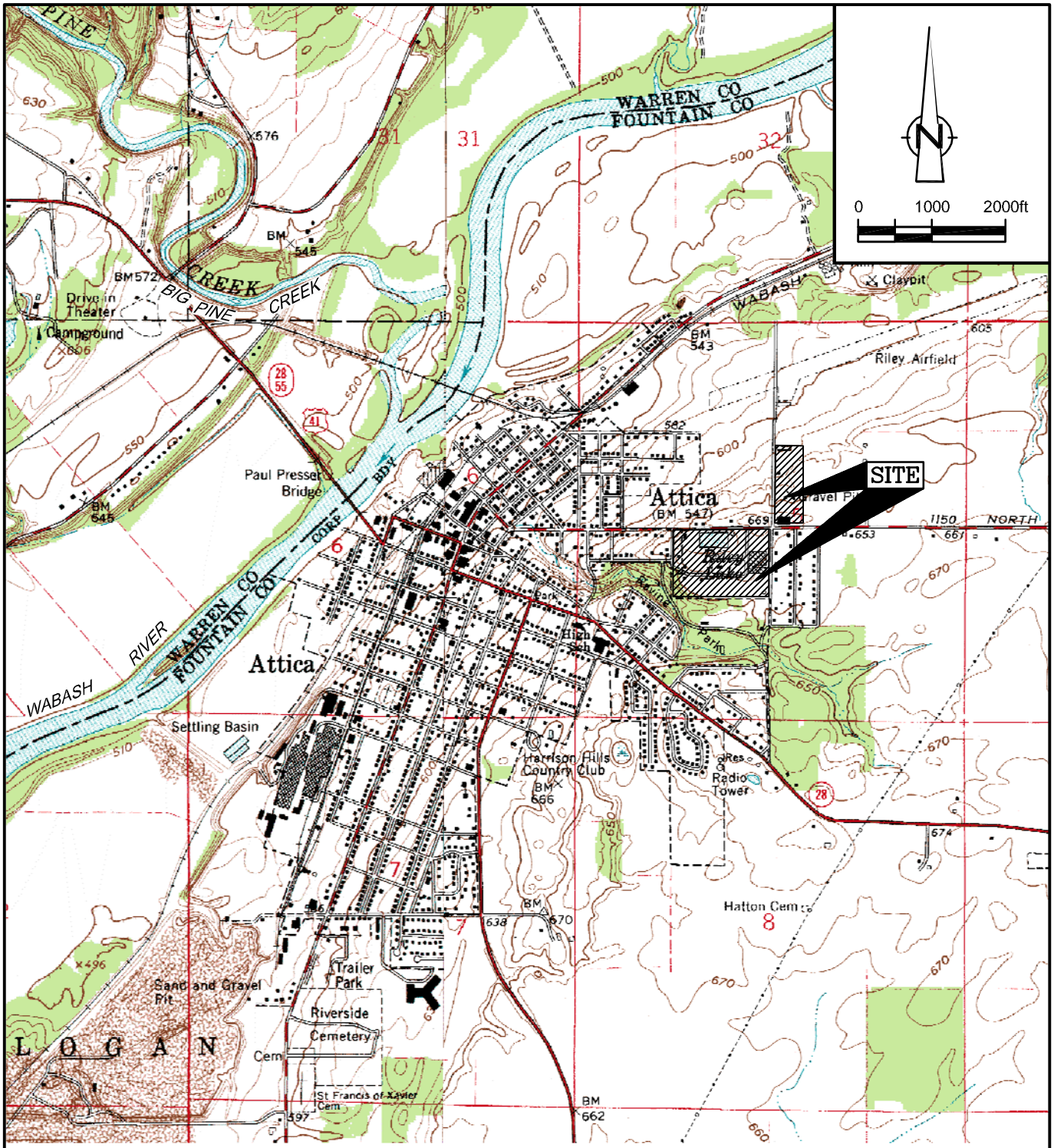

SOURCE: ATTICA AND WILLIAMSPORT, INDIANA
U.S.G.S. TOPOGRAPIC MAPS



figure 1.1

SITE LOCATION
RADIO MATERIALS CORPORATION
Attica, Indiana

19190-02(041)GN-CO001 FEB 24/2010

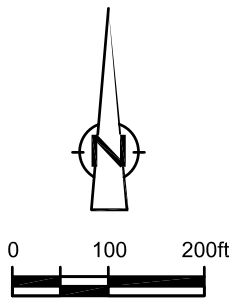

SWMUs AND AOCs

SWMU 1 - FORMER DRUM STORAGE AREA

SWMU 2 - PAST DISPOSAL AREA 'A'

SWMU 3 - TEMPORARY DRUM STORAGE AREA

SWMU 4 - CENTRIFUGE AREA

SWMU 5 - PAST DISPOSAL AREA 'B'

SWMU 6 - EIGHT 55-GALLON DRUM STORAGE AREA

SWMU 7 - ETCHING ROOM

SWMU 8 - PHENOLIC DIP AREA

SWMU 9 - EPOXY COATING ROOM

SWMU 10 - ORIGINAL PHENOLIC DIP AREA

SWMU 11 - PCE VAPOR DEGREASER

SWMU 12 - DYNAMITE BURIAL AREA

AOC 3A - DISCHARGE LOCATION TO CREEK

AOC 3B - DISCHARGE TO DRAINAGE DITCH

AOC 2 - UNDERGROUND STORAGE TANKS

AOC 5 - POTABLE WATER SUPPLY WELLS

NOTE:

SWMU 1 APPEARS TO HAVE VARIED IN SIZE FROM THE EXTENTS SHOWN IN RMC DRAWINGS (1981 TO 1988) TO THE DOCC REPORT (1999)

SOURCE: PHASE I RFI (2000)

figure 1.2

SITE PLAN WITH SWMUs AND AOCs
RADIO MATERIALS CORPORATION
Attica, Indiana

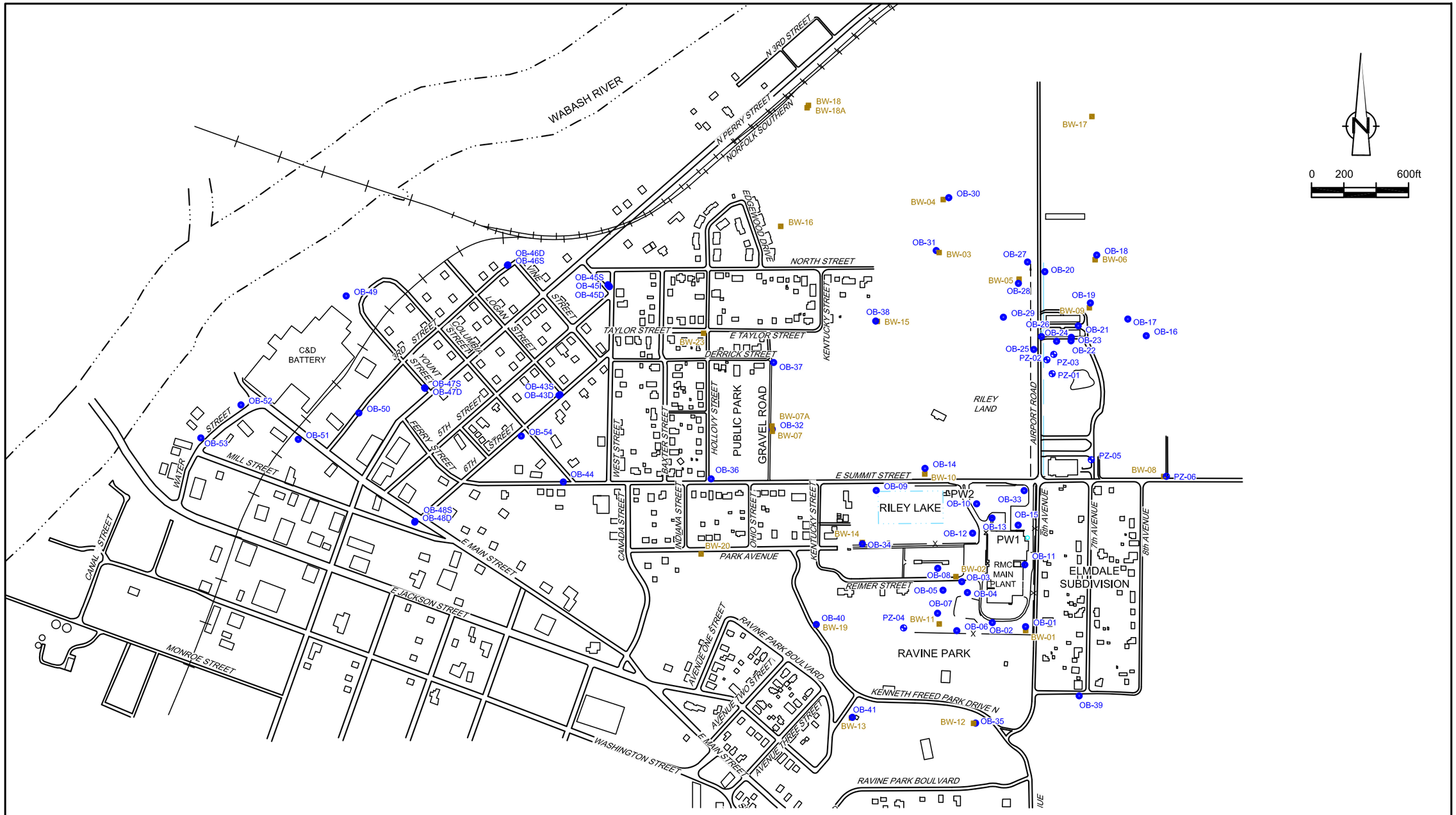

LEGEND

OB-34 ● EXISTING OVERBURDEN MONITORING WELL LOCATION AND IDENTIFIER

BW-7 ■ EXISTING BEDROCK MONITORING WELL LOCATION AND IDENTIFIER

PZ-01 ⊕ EXISTING OVERBURDEN PIEZOMETER LOCATION AND IDENTIFIER

figure 2.1

PIEZOMETER AND MONITORING WELL LOCATIONS
RADIO MATERIALS CORPORATION
Attica, Indiana

19190-02(041)GN-CO003 FEB 24/2010

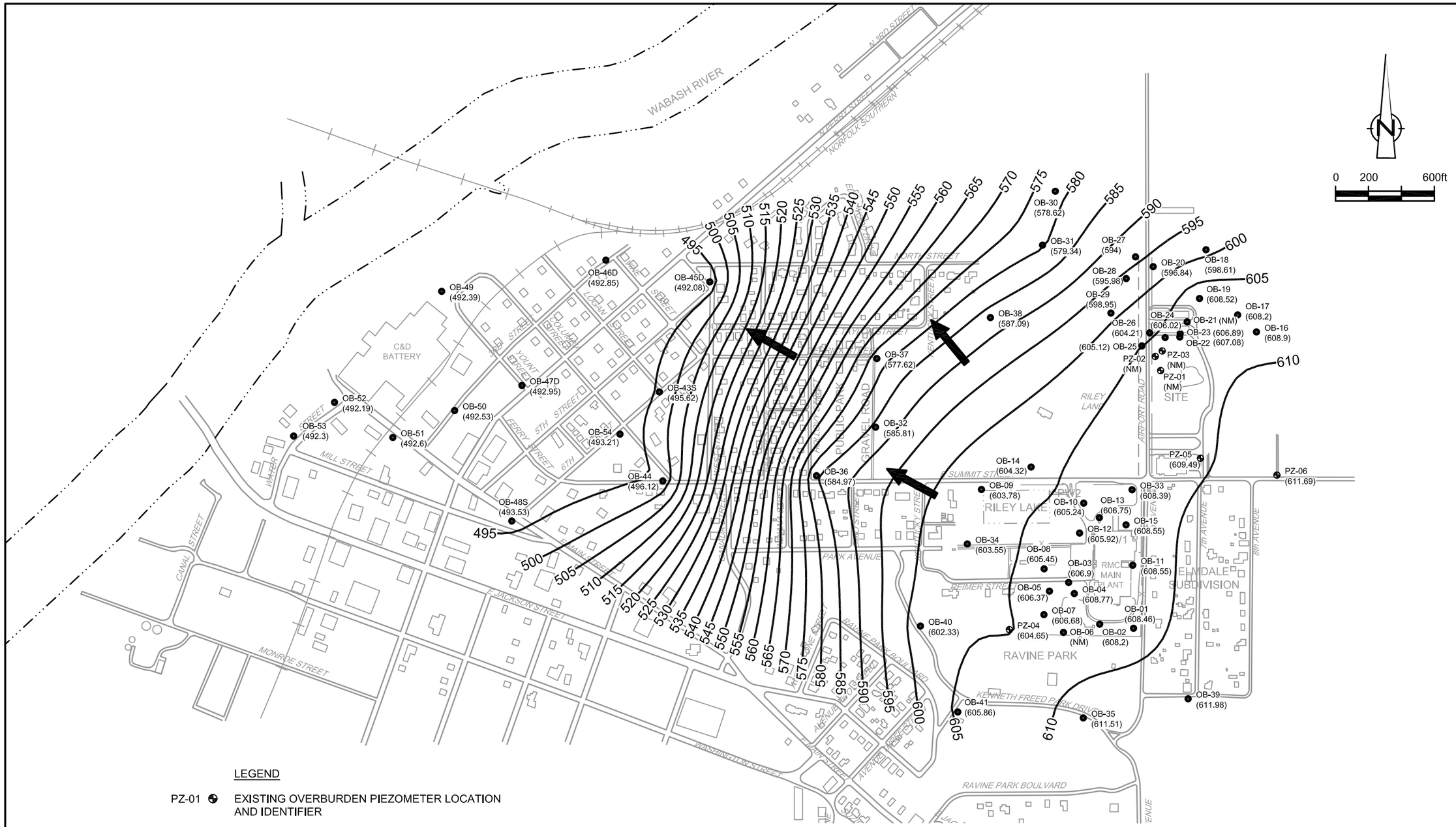

LEGEND

PZ-01 ⊕	EXISTING OVERBURDEN PIEZOMETER LOCATION AND IDENTIFIER
OB-09 ●	EXISTING OVERBURDEN MONITORING WELL LOCATION AND IDENTIFIER
(493.53)	GROUNDWATER ELEVATION (FT AMSL)
495	GROUNDWATER CONTOUR ELEVATION (FT AMSL)
➡	GROUNDWATER FLOW DIRECTION

figure 2.2

OVERBURDEN GROUNDWATER CONTOURS JULY 6, 2009 RADIO MATERIALS CORPORATION

Attica, Indiana

19190-02(041)GN-CO007 FEB 24/2010

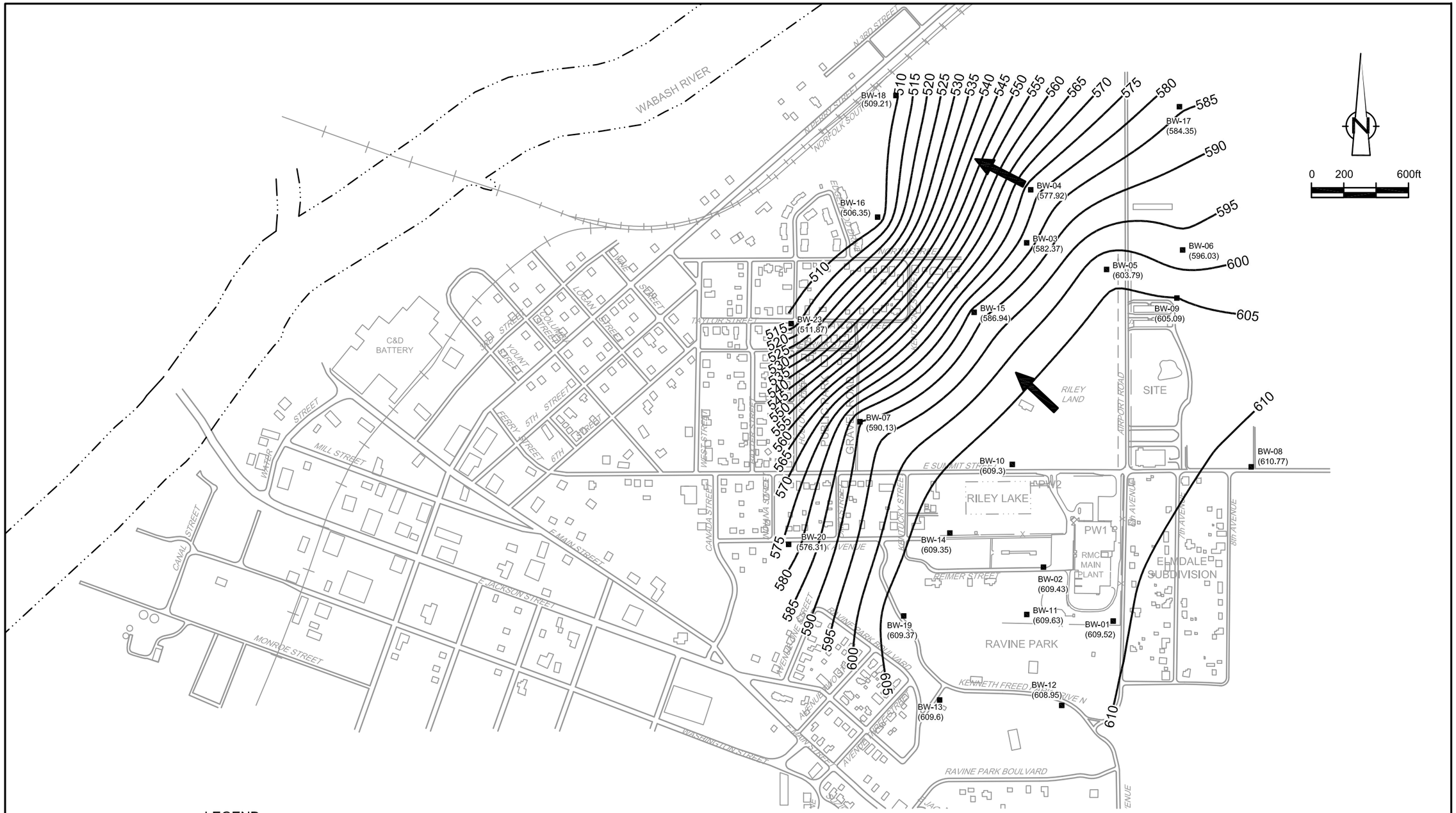

LEGEND

BW-13 ■	EXISTING BEDROCK MONITORING WELL LOCATION AND IDENTIFIER
(609.37)	GROUNDWATER ELEVATION (FT AMSL)
605	GROUNDWATER CONTOUR ELEVATION (FT AMSL)
➡	GROUNDWATER FLOW DIRECTION

figure 2.3

BEDROCK GROUNDWATER CONTOURS
JULY 6, 2009
RADIO MATERIALS CORPORATION
Attica, Indiana

19190-02(041)GN-CO008 FEB 24/2010

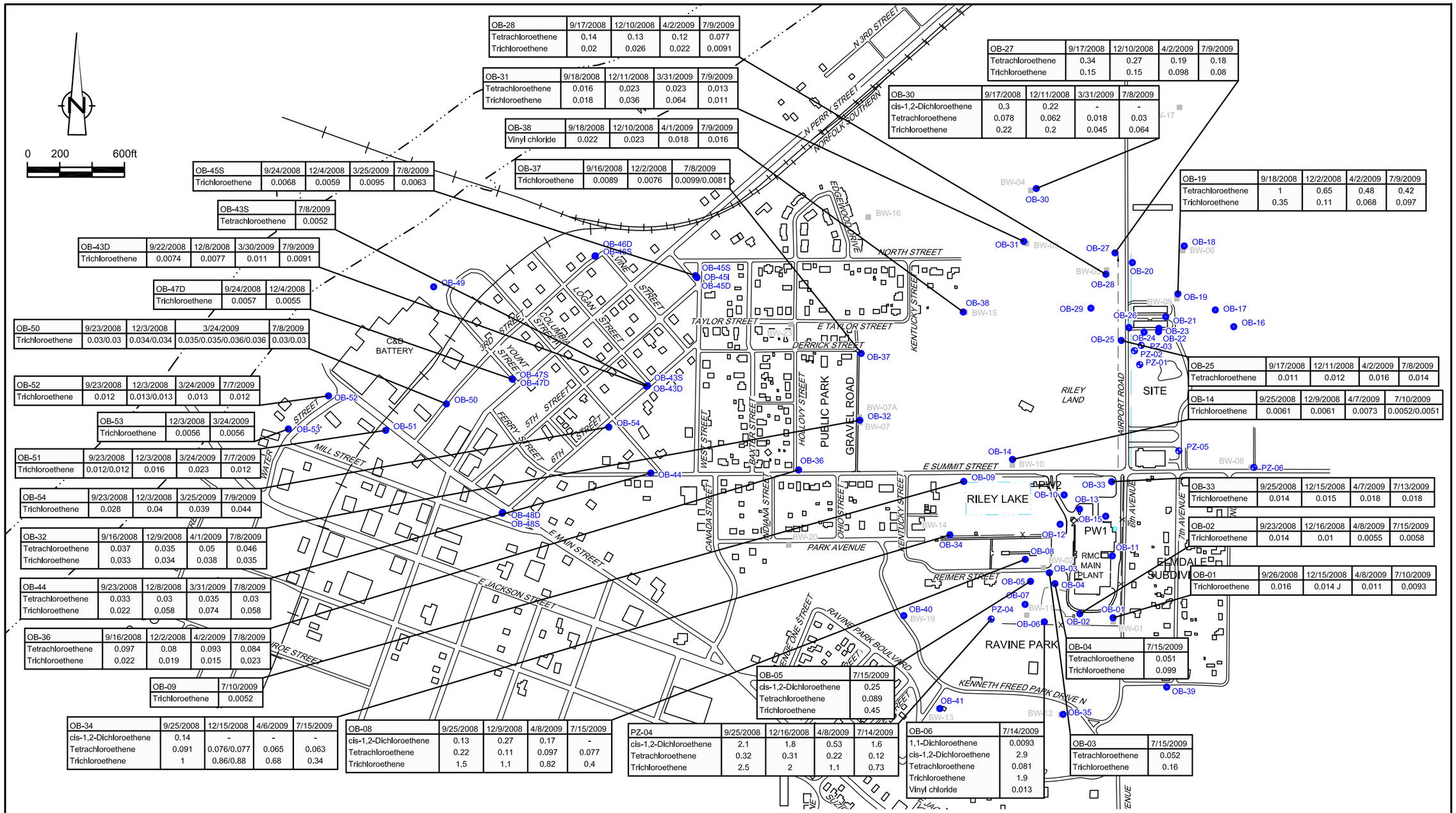

OB-28	9/17/2008	12/10/2008	4/2/2009	7/9/2009
Tetrachloroethene	0.14	0.13	0.12	0.077
Trichloroethene	0.02	0.026	0.022	0.0091

OB-31	9/18/2008	12/11/2008	3/31/2009	7/9/2009
Tetrachloroethene	0.016	0.023	0.023	0.013
Trichloroethene	0.018	0.036	0.064	0.011

OB-38	9/18/2008	12/10/2008	4/1/2009	7/9/2009
Vinyl chloride	0.022	0.023	0.018	0.016

OB-37	9/16/2008	12/2/2008	7/8/2009
Trichloroethene	0.0089	0.0076	0.0099/0.0081

OB-45S	9/24/2008	12/4/2008	3/25/2009	7/8/2009
Trichloroethene	0.0068	0.0059	0.0095	0.0063

OB-43S	7/8/2009
Tetrachloroethene	0.0052

OB-43D	9/22/2008	12/8/2008	3/30/2009	7/9/2009
Trichloroethene	0.0074	0.0077	0.011	0.0091

OB-47D	9/24/2008	12/4/2008
Trichloroethene	0.0057	0.0055

OB-50	9/23/2008	12/3/2008	3/24/2009	7/8/2009
Trichloroethene	0.03/0.03	0.034/0.034	0.035/0.035/0.036/0.036	0.03/0.03

OB-52	9/23/2008	12/3/2008	3/24/2009	7/7/2009
Trichloroethene	0.012	0.013/0.013	0.013	0.012

OB-53	12/3/2008	3/24/2009
Trichloroethene	0.0056	0.0056

OB-51	9/23/2008	12/3/2008	3/24/2009	7/7/2009
Trichloroethene	0.012/0.012	0.016	0.023	0.012

OB-54	9/23/2008	12/3/2008	3/25/2009	7/9/2009
Trichloroethene	0.028	0.04	0.039	0.044

OB-32	9/16/2008	12/9/2008	4/1/2009	7/8/2009
Tetrachloroethene	0.037	0.035	0.05	0.046
Trichloroethene	0.033	0.034	0.038	0.035

OB-44	9/23/2008	12/8/2008	3/31/2009	7/8/2009
Tetrachloroethene	0.033	0.03	0.035	0.03
Trichloroethene	0.022	0.058	0.074	0.058

OB-36	9/16/2008	12/2/2008	4/2/2009	7/8/2009
Tetrachloroethene	0.097	0.08	0.093	0.084
Trichloroethene	0.022	0.019	0.015	0.023

OB-09	7/10/2009
Trichloroethene	0.0052

OB-34	9/25/2008	12/15/2008	4/6/2009	7/15/2009
cis-1,2-Dichloroethene	0.14	-	-	-
Tetrachloroethene	0.091	0.076/0.077	0.065	0.063
Trichloroethene	1	0.86/0.88	0.68	0.34

OB-08	9/25/2008	12/9/2008	4/8/2009	7/15/2009
cis-1,2-Dichloroethene	0.13	0.27	0.17	-
Tetrachloroethene	0.22	0.11	0.097	0.077
Trichloroethene	1.5	1.1	0.82	0.4

PZ-04	9/25/2008	12/16/2008	4/8/2009	7/14/2009
cis-1,2-Dichloroethene	2.1	1.8	0.53	1.6
Tetrachloroethene	0.32	0.31	0.22	0.12
Trichloroethene	2.5	2	1.1	0.73

OB-05	7/15/2009
cis-1,2-Dichloroethene	0.25
Tetrachloroethene	0.089
Trichloroethene	0.45

OB-06	7/14/2009
1,1-Dichloroethene	0.0093
cis-1,2-Dichloroethene	2.9
Tetrachloroethene	0.081
Trichloroethene	1.9
Vinyl chloride	0.013

OB-03	7/15/2009
Tetrachloroethene	0.052
Trichloroethene	0.16

OB-04	7/15/2009
Tetrachloroethene	0.051
Trichloroethene	0.099

OB-27	9/17/2008	12/10/2008	4/2/2009	7/9/2009
Tetrachloroethene	0.34	0.27	0.19	0.18
Trichloroethene	0.15	0.15	0.098	0.08

OB-30	9/17/2008	12/11/2008	3/31/2009	7/8/2009
cis-1,2-Dichloroethene	0.3	0.22	-	-
Tetrachloroethene	0.078	0.062	0.018	0.03
Trichloroethene	0.22	0.2	0.045	0.064

OB-19	9/18/2008	12/2/2008	4/2/2009	7/9/2009
Tetrachloroethene	1	0.65	0.48	0.42
Trichloroethene	0.35	0.11	0.068	0.097

OB-25	9/17/2008	12/11/2008	4/2/2009	7/8/2009
Tetrachloroethene	0.011	0.012	0.016	0.014

OB-14	9/25/2008	12/9/2008	4/7/2009	7/10/2009
Trichloroethene	0.0061	0.0061	0.0073	0.0052/0.0051

OB-33	9/25/2008	12/15/2008	4/7/2009	7/13/2009
Trichloroethene	0.014	0.015	0.018	0.018

OB-02	9/23/2008	12/16/2008	4/8/2009	7/15/2009
Trichloroethene	0.014	0.01	0.0055	0.0058

OB-01	9/26/2008	12/15/2008	4/8/2009	7/10/2009
Trichloroethene	0.016	0.014 J	0.011	0.0093

LEGEND

OB-34 ● EXISTING OVERBURDEN MONITORING WELL LOCATION AND IDENTIFIER

BW-7 ■ EXISTING BEDROCK MONITORING WELL LOCATION AND IDENTIFIER

PZ-01 ⊕ EXISTING OVERBURDEN PIEZOMETER LOCATION

OB-11	04/12/07
Tetrachloroethene	0.013
Trichloroethene	0.017

SAMPLE LOCATION
SAMPLE DATE
CONCENTRATION (mg/L)
PARAMETER

NOTE:
RDCL - RESIDENTIAL DEFAULT CLOSURE LEVEL

figure 2.4

SUMMARY OF VOC DETECTIONS ABOVE THE RDCLs IN THE OVERBURDEN AQUIFER (SEPTEMBER 2008 - JULY 2009)
RADIO MATERIALS CORPORATION
Attica, Indiana

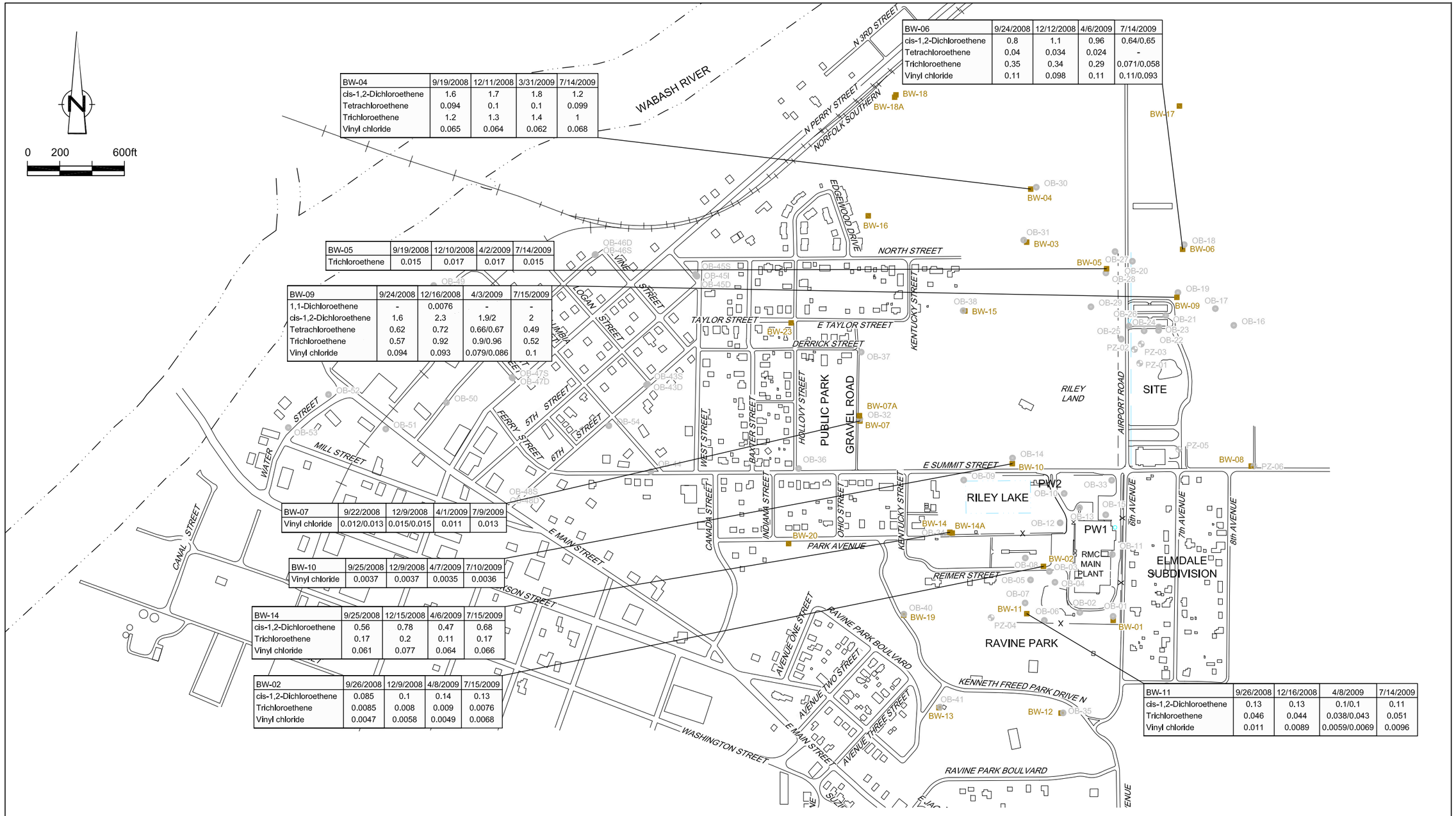

BW-04	9/19/2008	12/11/2008	3/31/2009	7/14/2009
cis-1,2-Dichloroethene	1.6	1.7	1.8	1.2
Tetrachloroethene	0.094	0.1	0.1	0.099
Trichloroethene	1.2	1.3	1.4	1
Vinyl chloride	0.065	0.064	0.062	0.068

BW-06	9/24/2008	12/12/2008	4/6/2009	7/14/2009
cis-1,2-Dichloroethene	0.8	1.1	0.96	0.64/0.65
Tetrachloroethene	0.04	0.034	0.024	-
Trichloroethene	0.35	0.34	0.29	0.071/0.058
Vinyl chloride	0.11	0.098	0.11	0.11/0.093

BW-05	9/19/2008	12/10/2008	4/2/2009	7/14/2009
Trichloroethene	0.015	0.017	0.017	0.015

BW-09	9/24/2008	12/16/2008	4/3/2009	7/15/2009
1,1-Dichloroethene	-	0.0076	-	-
cis-1,2-Dichloroethene	1.6	2.3	1.9/2	2
Tetrachloroethene	0.62	0.72	0.66/0.67	0.49
Trichloroethene	0.57	0.92	0.9/0.96	0.52
Vinyl chloride	0.094	0.093	0.079/0.086	0.1

BW-07	9/22/2008	12/9/2008	4/1/2009	7/9/2009
Vinyl chloride	0.012/0.013	0.015/0.015	0.011	0.013

BW-10	9/25/2008	12/9/2008	4/7/2009	7/10/2009
Vinyl chloride	0.0037	0.0037	0.0035	0.0036

BW-14	9/25/2008	12/15/2008	4/6/2009	7/15/2009
cis-1,2-Dichloroethene	0.56	0.78	0.47	0.68
Trichloroethene	0.17	0.2	0.11	0.17
Vinyl chloride	0.061	0.077	0.064	0.066

BW-02	9/26/2008	12/9/2008	4/8/2009	7/15/2009
cis-1,2-Dichloroethene	0.085	0.1	0.14	0.13
Trichloroethene	0.0085	0.008	0.009	0.0076
Vinyl chloride	0.0047	0.0058	0.0049	0.0068

BW-11	9/26/2008	12/16/2008	4/8/2009	7/14/2009
cis-1,2-Dichloroethene	0.13	0.13	0.1/0.1	0.11
Trichloroethene	0.046	0.044	0.038/0.043	0.051
Vinyl chloride	0.011	0.0089	0.0059/0.0069	0.0096

LEGEND

OB-34 EXISTING OVERBURDEN MONITORING WELL LOCATION AND IDENTIFIER

BW-7 EXISTING BEDROCK MONITORING WELL LOCATION AND IDENTIFIER

PZ-01 EXISTING OVERBURDEN PIEZOMETER LOCATION

BW-13	12/2/2004
1,1-Dichloroethene	ND(0.0005)
Tetrachloroethene	0.00019 J
Trichloroethene	ND(0.0005)
Vinyl chloride	ND(0.0005)

SAMPLE LOCATION
SAMPLE DATE
CONCENTRATION (mg/L)
PARAMETER

NOTE:
RDCL - RESIDENTIAL DEFAULT CLOSURE LEVEL

figure 2.5

SUMMARY OF VOC DETECTIONS ABOVE THE RDCLs IN THE BEDROCK AQUIFER (SEPTEMBER 2008 - JULY 2009)
RADIO MATERIALS CORPORATION
Attica, Indiana

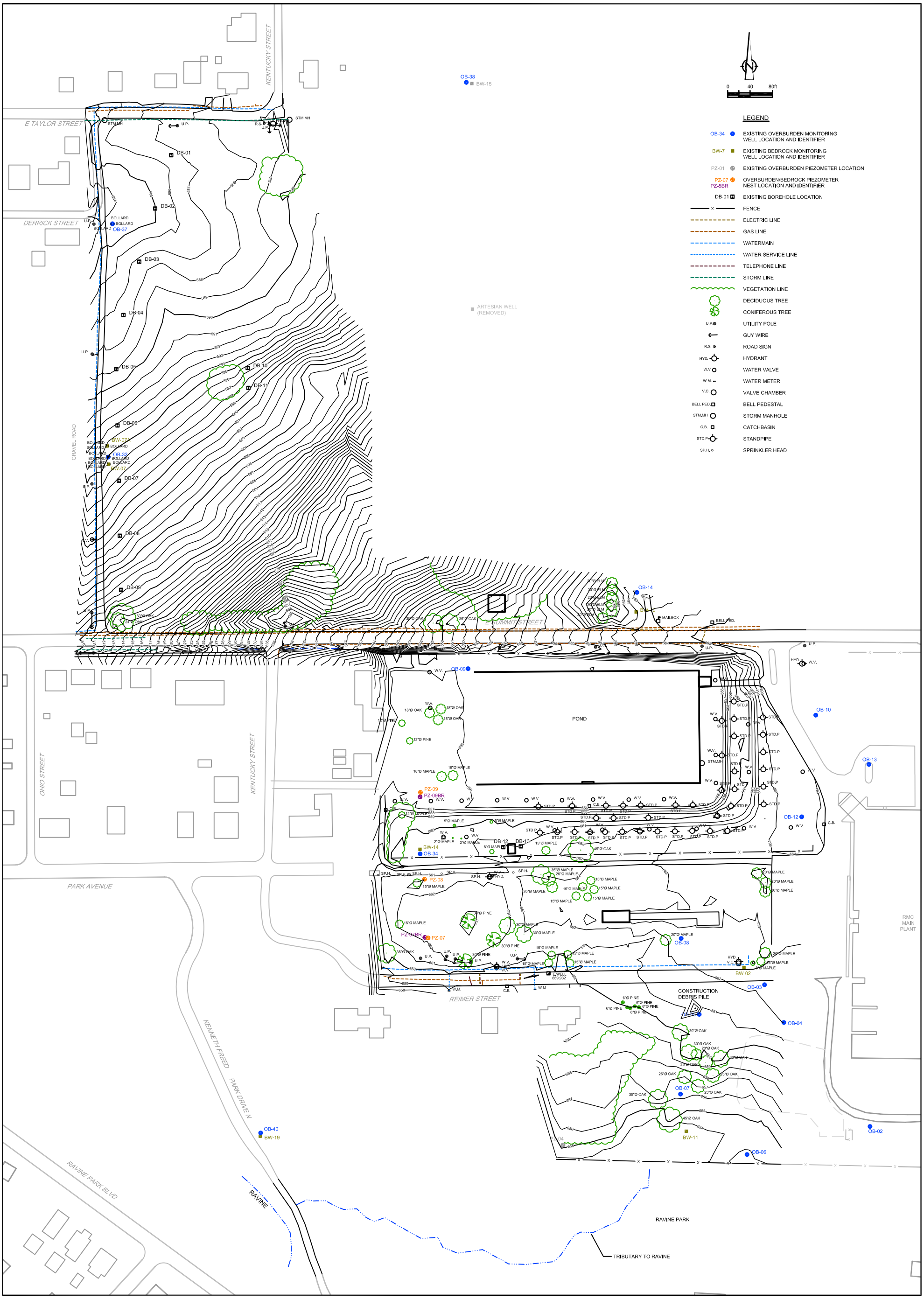

No	Revision	Date	Initial

SCALE VERIFICATION

THIS BAR MEASURES 1" ON ORIGINAL. ADJUST SCALE ACCORDINGLY.

Approved

RADIO MATERIALS CORPORATION
ATTICA, INDIANA

TOPOGRAPHIC SURVEY
JULY 2009

CONESTOGA-ROVERS & ASSOCIATES

Source Reference: CRA SURVEY, JUNE 8-19, 2009. INDIANA WEST SPC, US SURVEY FEET.

Project Manager:	Reviewed By:	Date:	
S.W.	S.M.	NOVEMBER 2009	
Scale: 1:80	Project No: 19190-02	Report No: 041	Drawing No: figure 2.6

19190-02(041)GN-CO004 FEB 23/2010

FIGURE 7.1

GROUNDWATER ICM CONSTRUCTION SCHEDULE
RADIO MATERIALS CORPORATION
ATTICA, INDIANA

ID	Task Name	Duration	Start	Finish
1	Submit Groundwater ICM Design and Specifications	1 day	Fri 10/15/10	Fri 10/15/10
2	EPA Review of Design and Specifications	44 days	Mon 10/18/10	Thu 12/16/10
3	EPA Approval of Design and Specifications	1 day	Fri 12/17/10	Fri 12/17/10
4	**Groundwater Extraction and Treatment**	**186 days**	**Mon 12/20/10**	**Mon 9/5/11**
5	Contractor Procurement	26 days	Mon 12/20/10	Mon 1/24/11
6	Mobilization	10 days	Tue 1/25/11	Mon 2/7/11
7	ICM Construction	139 days	Tue 2/8/11	Fri 8/19/11
8	System Testing	10 days	Mon 8/22/11	Fri 9/2/11
9	System Startup	1 day	Mon 9/5/11	Mon 9/5/11
10	**AS/SVE System**	**142 days**	**Tue 2/1/11**	**Wed 8/17/11**
11	Contractor Procurement	26 days	Tue 2/1/11	Tue 3/8/11
12	Mobilization	10 days	Wed 3/9/11	Tue 3/22/11
13	ICM Construction	95 days	Wed 3/23/11	Tue 8/2/11
14	System Testing	10 days	Wed 8/3/11	Tue 8/16/11
15	System Startup	1 day	Wed 8/17/11	Wed 8/17/11
16	Prepare O&M Manual	20 days	Thu 8/18/11	Wed 9/14/11
17	Prepare Construction Report	44 days	Fri 7/15/11	Wed 9/14/11
18	Submit Construction Report to EPA	1 day	Thu 9/15/11	Thu 9/15/11

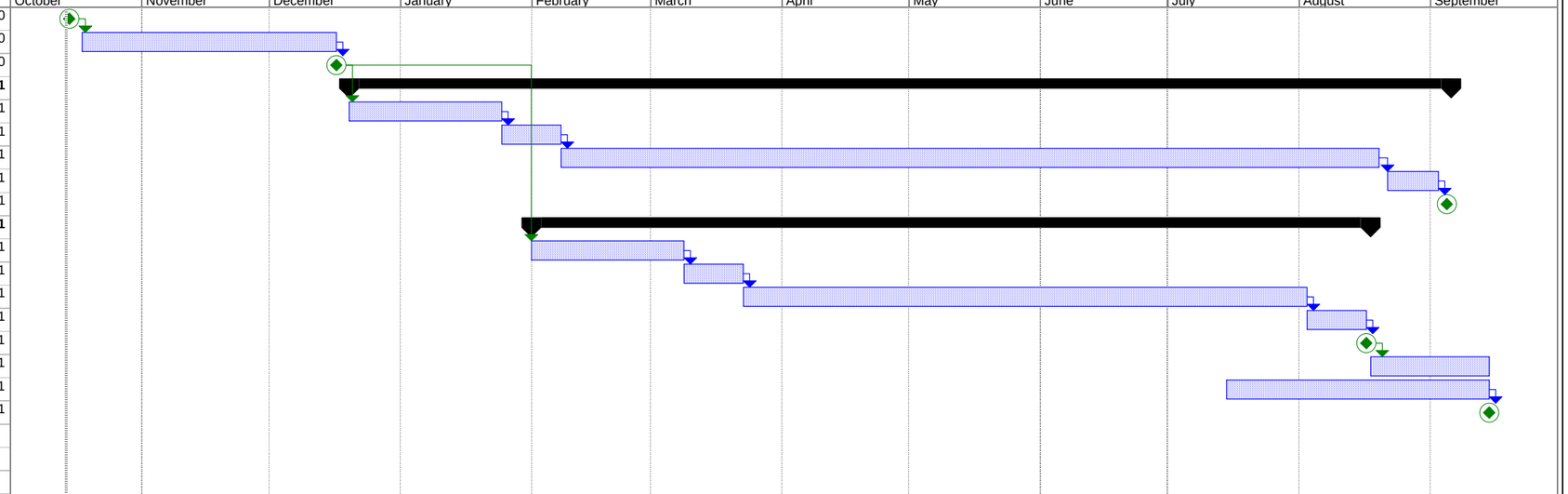

Notes:
(1) This schedule will be updated, as necessary, following contractor selection.

ICM Schedule
Date: October 14, 2010

Milestone Task Summary

CRA 019190 (41)

TABLE 3.1

EXISTING AND PROPOSED OVERBURDEN EXTRACTION WELL DETAILS
RADIO MATERIALS CORPORATION
ATTICA, INDIANA

Well Number	*Estimated Top of Casing Elevation (feet AMSL)*	*Approximate Ground Surface Elevation (feet AMSL)*	*Casing/Screen Material*	*Well Diameter (inches)*	*Borehole Diameter (inches)*	*Estimated Depth to Bedrock (feet/feet AMSL)*	*Estimated Total Well Depth (feet/feet AMSL)*	*Estimated Screen Length (feet)*	*Estimated Screen Interval (feet/feet AMSL)*	*Pump Inlet Depth (feet/feet AMSL)*	*Riser Pipe Diameter (inches)*
EW-01 (Existing)	662.4	660.7	Sch 80 PVC	4	12	68.0/592.7	69.0/591.7	5	64-69/596.7-591.7	593.7	4
EW-02	654	656	Sch 80 PVC	6	10 to 12	65.0/591.0	69.0/587.0	5	60-65/596-591	590	6
EW-03	654	656	Sch 80 PVC	6	10 to 12	65.0/591.0	69.0/587.0	5	60-65/596-591	590	6
EW-04	654	656	Sch 80 PVC	6	10 to 12	65.0/591.0	69.0/587.0	5	60-65/596-591	590	6
EW-05	654	656	Sch 80 PVC	6	10 to 12	65.0/591.0	69.0/587.0	5	60-65/596-591	590	6
EW-06	654	656	Sch 80 PVC	6	10 to 12	65.0/591.0	69.0/587.0	5	60-65/596-591	590	6
EW-07	659	661	Sch 80 PVC	6	10 to 12	68.0/593.0	72.0/589.0	5	63-68/598-593	592	6
EW-08	660	662	Sch 80 PVC	6	10 to 12	69.0/593.0	73.0/589.0	5	64-69/598-593	592	6
EW-09	659	661	Sch 80 PVC	6	10 to 12	67.0/594.0	71.0/590.0	5	62-67/599-594	593	6
EW-10	658	660	Sch 80 PVC	6	10 to 12	64.0/596.0	68.0/592.0	5	59-64/601-596	595	6
EW-11	658	660	Sch 80 PVC	6	10 to 12	63.0/597.0	67.0/593.0	5	58-63/602-597	596	6
EW-12	657	659	Sch 80 PVC	6	10 to 12	60.0/599.0	64.0/595.0	5	55-60/604-599	598	6
EW-13	656	658	Sch 80 PVC	6	10 to 12	57.0/601.0	61.0/597.0	5	52-57/606-601	600	6
EW-14	655	657	Sch 80 PVC	6	10 to 12	54.0/603.0	58.0/599.0	2.5	51.5-54/605.5-603	602	6
EW-15	653	655	Sch 80 PVC	6	10 to 12	50.0/605	54.0/601.0	2.5	47.5-50/607.5-605	604	6

Notes:

1. Extraction well screen slot size to be determined from formation sample grain size analysis.
2. Actual construction details (depths/elevations) to be determined upon actual Site conditions.
3. Construction details for existing extraction well EW-01 are based on actual field measurements.

TABLE 4.1

POTENTIAL EMISSIONS SUMMARY
RADIO MATERIALS CORPORATION
ATTICA, INDIANA

System Identification	*cDCE PTE (tpy) (1)*	*PCE PTE (tpy) (2)*	*TCE PTE (tpy) (1)(2)*	*Other VOCs/HAPs PTE (tpy)*	*VOC PTE (tpy) (3)*	*Combined HAP PTE (tpy) (4)*
SWMU 5 SVE System	0.077	0.22	0.46	0	0.536	0.68
SWMU 11 SVE System	0.077	0.14	0.47	0	0.547	0.61
SWMU 1/2 SVE System	0.033	0.16	0.017	0	0.050	0.176
Groundwater Remediation System	0.63	0.09	2.3	0.02	3.0	2.4
Park AS/SVE System	0	0.74	0.56	0	0.56	1.30
TOTAL	0.82	1.35	3.8	0.02	4.6	5.2
Indiana Air Permitting Thresholds	N/A	10	10	N/A	10	25

Notes:
(1) cDCE and TCE are VOCs pursuant to 326 IAC 1-2-90 and 40 CFR 51.100(s).
(2) PCE and TCE are HAPs. HAPs are listed hazardous air pollutants pursuant to Section 112(b) of the Clean Air Act and not delisted or redefined under 40 CFR Part 63, Subpart C.
(3) VOC PTE (tpy) = cDCE PTE (tpy) + TCE PTE (tpy)
(4) Combined HAP PTE (tpy) = PCE PTE (tpy) + TCE PTE (tpy)
AS - air sparge
cDCE - cis-1,2-Dichloroethene
HAP - Hazardous Air Pollutant
PCE - Tetrachloroethene
PTE - Potential to Emit
SVE - soil vapor extraction
SWMU - solid waste management unit
TCE - Trichloroethene
tpy - tons per year
VOC - Volatile Organic Compound

TABLE 4.2

POTENTIAL EMISSIONS EVALUATION
EXISTING SVE SYSTEMS
RADIO MATERIALS CORPORATION
ATTICA, INDIANA

Parameter	*Concentration in Air Stream (mg/m3) (1)(2)*	*Concentration in Air Stream (mg/ft3) (3)*	*Max. Air Velocity (ft/min) (4)*	*Pipe Inside Diameter (in)*	*Max. Volumetric Flow Rate (acfm) (5)*	*PTE (lb/hr) (6)*	*PTE (tpy) (7)*
SWMU 5 SVE System							
cDCE	1.5	0.04	5,700	10	3,109	0.02	0.077
PCE	4.3	0.12	5,700	10	3,109	0.05	0.22
TCE	9.0	0.25	5,700	10	3,109	0.10	0.46
SWMU 11 SVE System							
cDCE	2.7	0.1	3,200	10	1,745	0.02	0.077
PCE	4.8	0.1	3,200	10	1,745	0.03	0.14
TCE	16	0.5	3,200	10	1,745	0.11	0.47
SWMU 1/2 SVE System							
cDCE	0.43	0.01	8,700	10	4,745	0.01	0.033
PCE	2.1	0.058	8,700	10	4,745	0.04	0.16
TCE	0.22	0.01	8,700	10	4,745	0.00	0.017

Notes:
(1) The concentrations of cDCE, PCE, and TCE in the air streams of the SWMU 5 and 11 SVE Systems are the average of the analytical data from the Sep. 2009 and Aug. 2010 sampling events.
(2) The concentrations of cDCE, PCE, and TCE in the air stream of the SWMU 1/2 SVE System are the average of the analytical data from the Jul. 2009 and Sep. 2009 sampling events.
(3) Concentration in Air Stream (mg/ft3) = Concentration in Air Stream (mg/m3) / 35.3146667 ft3/m3
(4) The maximum air velocities are the highest known values recorded by the SCADA controls or observed.
(5) Max. Volumetric Flow Rate (acfm) = pi x [Pipe Inside Diameter (in) / 2]^2 x Max. Air Velocity (ft/min)
(6) PTE (lb/hr) = Concentration in Air Stream (mg/ft3) x Max. Volumetric Flow Rate (acfm) x 60 min/hr / 453,592 mg/lb
(7) PTE (tpy) = Removal Rate (lb/hr) x 8,760 hr/yr / 2,000 lb/ton
acfm - actual cubic feet per minute
cDCE - cis-1,2-Dichloroethene
ft/min - feet per minute
in - inches
lb/hr - pounds per hour
mg/ft3 - milligrams per cubic foot
mg/m3 - milligrams per cubic meter
PCE - Tetrachloroethene
PTE - Potential to Emit
SVE - soil vapor extraction
SWMU - solid waste management unit
TCE - Trichloroethene
tpy - tons per year

TABLE 4.3

POTENTIAL EMISSIONS EVALUATION
FUTURE GROUNDWATER EXTRACTION TREATMENT SYSTEM - SOUTH OF SUMMIT STREET
RADIO MATERIALS CORPORATION
ATTICA, INDIANA

Parameter	*Concentration in Groundwater (mg/L) (1)*	*Concentration in Groundwater (lb/gal) (2)*	*Max. Flow Rate through Air Stripper (gpm)*	*PTE (lb/hr) (3) (4)*	*PTE (tpy) (5)*
cDCE	0.68	5.7E-06	425	1.4E-01	0.63
PCE	0.10	8.2E-07	425	2.1E-02	0.09
TCE	2.5	2.1E-05	425	5.3E-01	2.3
Other VOCs/HAPs	0.02	1.7E-07	425	4.3E-03	0.02

Notes:

(1) The concentrations of cDCE, PCE, and TCE in the groundwater to be treated by the air stripper are a volumetric blend of the highest detected concentrations from sampling the overburden extraction well (EW-01) and bedrock extraction well (BW-14A) during the pump test conducted in Feb./Mar. 2008. These concentrations generally occurred during the first hour of the pump test.
(2) Concentration in Groundwater (lb/gal) = Concentration in Groundwater (mg/L) / 1,000 mg/g / 453.6 g/lb x 3.78 L/gal
(3) Potential Emissions (lb/hr) = Concentration in Groundwater (lb/gal) x Max. Flow Rate through Air Stripper (gpm) x 60 min/hr
(4) Assumed that the air stripper will transfer 100% of cDCE/PCE/TCE in the water stream undergoing treatment to an air stream.
(5) PTE (tpy) = PTE (lb/hr) x 8,760 hr/yr / 2,000 lb/ton
cDCE - cis-1,2-Dichloroethene
gpm - gallons per minute
lb/gal - pounds per gallon
mg/L - milligrams per liter
PCE - Tetrachloroethene
PTE - Potential to Emit
TCE - Trichloroethene
tpy - tons per year
VOC - Volatile Organic Compound

TABLE 4.4

POTENTIAL EMISSIONS EVALUATION
FUTURE AS/SVE SYSTEM - NORTH OF SUMMIT STREET
RADIO MATERIALS CORPORATION
ATTICA, INDIANA

Parameter	*Concentration in Groundwater (mg/L) (1)*	*Concentration in Groundwater (lb/cf) (2)*	*Max. Total Exhaust Rate from SVE Blowers (scfm)*	*PTE (lb/hr) (3)*	*PTE (tpy) (4)*
PCE	0.05	3.1.E-06	900	0.17	0.74
TCE	0.038	2.4.E-06	900	0.13	0.56

Notes:

(1) The concentrations of cDCE, PCE, and TCE in the groundwater to be treated by the AS/SVE System are values from sampling OB-32 in April 2009.
(2) Concentration in Groundwater (lb/cf) = Concentration in Groundwater (mg/L) / 1,000 mg/g / 453.6 g/lb x 28.32 L/cf
(3) PTE (lb/hr) = Concentration in Groundwater (lb/cf) x Max. Total Exhaust Rate from SVE Blowers (scfm) x 60 min/hr
(4) PTE (tpy) = PTE (lb/hr) x 8,760 hr/yr / 2,000 lb/ton
AS - air sparge
cDCE - cis-1,2-Dichloroethene
lb/cf - pounds per cubic foot
lb/hr - pounds per hour
mg/L - milligrams per liter
PCE - Tetrachloroethene
PTE - Potential to Emit
scfm - standard cubic feet per minute
SVE - soil vapor extraction
TCE - Trichloroethene
tpy - tons per year

APPENDIX A

STRATIGRAPHIC LOGS

STRATIGRAPHIC AND INSTRUMENTATION LOG (OVERBURDEN)

PROJECT NAME: Radio Materials Corporation
PROJECT NUMBER: 019190
CLIENT:
LOCATION: Attica, Indiana
DRILLING CONTRACTOR: ESI

HOLE DESIGNATION: DB-1
DATE COMPLETED: November 18, 2009
DRILLING METHOD: DPT
FIELD PERSONNEL: J. Phillips

DEPTH ft BGS	STRATIGRAPHIC DESCRIPTION & REMARKS	ELEV. ft AMSL	BOREHOLE	SAMPLE NUMBER	SAMPLE INTERVAL	SAMPLE REC (ft)	SAMPLE 'N' VALUE
	GROUND SURFACE	586.7					
0	TOPSOIL	585.6					
2	CH CLAY, with silt, trace medium grained sand, firm, high plasticity, dark brown, moist			1	P/S	4.0	
4							
6	SM SILTY SAND, with fine gravel, slightly compact, brown - saturated at 5.2ft BGS	581.8 580.7	▽	5.2'-6'			
8	CH CLAY, with silt, trace medium grained sand, stiff, high plasticity, brown, moist - fine gravel seam from 8.0 to 8.2ft BGS		Backfilled with Bentonite Chips and Soil Cuttings	2	P/S	5.0	
10							
12				3	P/S	5.0	
14	SHALE, weathered, gray	572.5					
	END OF BOREHOLE @ 15.0ft BGS	571.7					
16							
18							
20							
22							
24							
26							
28							

NOTES: MEASURING POINT ELEVATIONS MAY CHANGE; REFER TO CURRENT ELEVATION TABLE
WATER FOUND ▽ 11/18/09
GRAIN SIZE ANALYSIS ☐

OVERBURDEN LOG 019190.GPJ CRA_CORP.GDT 11/19/09

STRATIGRAPHIC AND INSTRUMENTATION LOG (OVERBURDEN)

PROJECT NAME: Radio Materials Corporation
PROJECT NUMBER: 019190
CLIENT:
LOCATION: Attica, Indiana
DRILLING CONTRACTOR: ESI

HOLE DESIGNATION: DB-2
DATE COMPLETED: November 18, 2009
DRILLING METHOD: DPT
FIELD PERSONNEL: J. Phillips

DEPTH ft BGS	STRATIGRAPHIC DESCRIPTION & REMARKS	ELEV. ft AMSL	BOREHOLE	SAMPLE NUMBER	SAMPLE INTERVAL	SAMPLE REC (ft)	SAMPLE 'N' VALUE
	GROUND SURFACE	585.1					
0	TOPSOIL	584.6					
	CH CLAY, with silt, trace medium grained sand, firm, dark brown, moist						
2	- with fine to medium grained sand and gravel, reddish-brown at 2.5ft BGS			1	P/S	3.7	
4							
6	- wet seam from 5.8 to 6.2ft BGS	578.9		5.8'-6.2'			
	MLS SANDY SILT, with fine gravel, dense, light brown, slightly moist		Backfilled with Bentonite Chips and Soil Cuttings	2	P/S	2.5	
8	- hit an obstruction and had to move over at 8.5ft BGS						
10	- saturated sand seam from 10.0 to 10.1ft BGS						
	SHALE, weathered, dark gray, dry	574.0		3	P/S	3.0	
12	- wet to saturated at 12.5ft BGS		▽				
	END OF BOREHOLE @ 13.0ft BGS	572.1					
14							
16							
18							
20							
22							
24							
26							
28							

NOTES: MEASURING POINT ELEVATIONS MAY CHANGE; REFER TO CURRENT ELEVATION TABLE
WATER FOUND ▽ 11/18/09
GRAIN SIZE ANALYSIS ☐

STRATIGRAPHIC AND INSTRUMENTATION LOG (OVERBURDEN)

PROJECT NAME: Radio Materials Corporation
PROJECT NUMBER: 019190
CLIENT:
LOCATION: Attica, Indiana
DRILLING CONTRACTOR: ESI

HOLE DESIGNATION: DB-3
DATE COMPLETED: November 18, 2009
DRILLING METHOD: DPT
FIELD PERSONNEL: J. Phillips

DEPTH ft BGS	STRATIGRAPHIC DESCRIPTION & REMARKS	ELEV. ft AMSL	BOREHOLE	SAMPLE NUMBER	SAMPLE INTERVAL	SAMPLE REC (ft)	SAMPLE 'N' VALUE
	GROUND SURFACE	587.1					
0	TOPSOIL	586.5					
	CH CLAY, with fine grained sand, firm, high plasticity, reddish-brown, moist - with fine to medium gravel at 1.0ft BGS			1	P/S	5.0	
4	GM SILTY GRAVEL, sandy (fine to medium grained) compact, reddish-brown, moist	582.3					
8			Backfilled with Bentonite Chips and Soil Cuttings	2	P/S	2.0	
10	- saturated at 10.0ft BGS			10'-10.9'			
	SHALE, weathered, black, moist - gray, dry at 11.7ft BGS	576.2		3	P/S	5.0	
14	- refusal at 15.0ft BGS	572.1					
	END OF BOREHOLE @ 15.0ft BGS						
16							
18							
20							
22							
24							
26							
28							

NOTES: MEASURING POINT ELEVATIONS MAY CHANGE; REFER TO CURRENT ELEVATION TABLE

GRAIN SIZE ANALYSIS ☐

OVERBURDEN LOG 019190.GPJ CRA_CORP.GDT 11/19/09

STRATIGRAPHIC AND INSTRUMENTATION LOG (OVERBURDEN)

PROJECT NAME: Radio Materials Corporation
PROJECT NUMBER: 019190
CLIENT:
LOCATION: Attica, Indiana
DRILLING CONTRACTOR: ESI

HOLE DESIGNATION: DB-4
DATE COMPLETED: November 18, 2009
DRILLING METHOD: DPT
FIELD PERSONNEL: J. Phillips

DEPTH ft BGS	STRATIGRAPHIC DESCRIPTION & REMARKS	ELEV. ft AMSL	BOREHOLE	SAMPLE NUMBER	SAMPLE INTERVAL	SAMPLE REC (ft)	SAMPLE 'N' VALUE
	GROUND SURFACE	587.2					
0	TOPSOIL	586.7					
	CL-ML SILTY CLAY, trace medium grained sand, firm, low plasticity, brown, moist						
2	- with fine gravel, coarse grained sand, high plasticity at 1.8ft BGS			1	P/S	4.0	
4		582.5	▽				
	GM SILTY GRAVEL, sandy (fine to medium grained), slightly compact, brown, moist			5'-5.5'			
6	- wet at 5.0ft BGS						
8			Backfilled with Bentonite Chips and Soil Cuttings	2	P/S	1.5	
10	- fine grained sand, compact, wet at 9.7ft BGS	577.2		9.7'-10'			
	SHALE, weathered, gray, dry						
12				3	P/S	3.9	
14	- refusal at 13.9ft BGS	573.3					
	END OF BOREHOLE @ 13.9ft BGS						
16							
18							
20							
22							
24							
26							
28							

NOTES: MEASURING POINT ELEVATIONS MAY CHANGE; REFER TO CURRENT ELEVATION TABLE
WATER FOUND ▽ 11/18/09
GRAIN SIZE ANALYSIS ☐

OVERBURDEN LOG 019190.GPJ CRA_CORP.GDT 11/19/09

STRATIGRAPHIC AND INSTRUMENTATION LOG (OVERBURDEN)

PROJECT NAME: Radio Materials Corporation
PROJECT NUMBER: 019190
CLIENT:
LOCATION: Attica, Indiana
DRILLING CONTRACTOR: ESI

HOLE DESIGNATION: DB-5
DATE COMPLETED: November 18, 2009
DRILLING METHOD: DPT
FIELD PERSONNEL: J. Phillips

DEPTH ft BGS	STRATIGRAPHIC DESCRIPTION & REMARKS	ELEV. ft AMSL	BOREHOLE	SAMPLE NUMBER	SAMPLE INTERVAL	SAMPLE REC (ft)	SAMPLE 'N' VALUE
	GROUND SURFACE	589.0					
0	TOPSOIL	588.6					
	CL-ML SILTY CLAY, trace medium grained sand, firm, low plasticity, brown, moist			1	P/S	4.4	
2							
	- sandy, coarse grained, soft, wet from 3.2 to 4.4ft BGS						
4							
6	GM SILTY GRAVEL, sandy, loose, brown, saturated	582.6	Backfilled with Bentonite Chips and Soil Cuttings	2	P/S	3.0	
8				6.4'-10'			
10	SHALE, weathered, dark gray	579.0		3	P/S	3.2	
12							
	- refusal at 13.5ft BGS	575.5					
14	END OF BOREHOLE @ 13.5ft BGS						
16							
18							
20							
22							
24							
26							
28							

NOTES: MEASURING POINT ELEVATIONS MAY CHANGE; REFER TO CURRENT ELEVATION TABLE

WATER FOUND ▽ 11/18/09

GRAIN SIZE ANALYSIS ☐

OVERBURDEN LOG 019190.GPJ CRA_CORP.GDT 11/19/09

STRATIGRAPHIC AND INSTRUMENTATION LOG (OVERBURDEN)

PROJECT NAME: Radio Materials Corporation
PROJECT NUMBER: 019190
CLIENT:
LOCATION: Attica, Indiana
DRILLING CONTRACTOR: ESI

HOLE DESIGNATION: DB-6
DATE COMPLETED: November 18, 2009
DRILLING METHOD: DPT
FIELD PERSONNEL: J. Phillips

DEPTH ft BGS	STRATIGRAPHIC DESCRIPTION & REMARKS	ELEV. ft AMSL	BOREHOLE	SAMPLE NUMBER	SAMPLE INTERVAL	SAMPLE REC (ft)	SAMPLE 'N' VALUE
	GROUND SURFACE	593.1					
0	TOPSOIL	592.6					
	CL-ML SILTY CLAY, trace fine grained sand, firm, low plasticity, brown, moist						
2				1	P/S	4.0	
	- with fine gravel, medium plasticity at 2.8ft BGS						
4							
	GM SILTY GRAVEL, sandy (fine to medium grained), slightly compact, reddish-brown, moist	588.3					
6							
8			Backfilled with Bentonite Chips and Soil Cuttings	2	P/S	1.4	
10	- saturated at 10.0ft BGS		▽				
				10'-10.9'			
	SHALE, weathered, dark gray	582.2					
12				3	P/S	5.0	
14							
	- refusal at 15.0ft BGS	578.1					
16	END OF BOREHOLE @ 15.0ft BGS						
18							
20							
22							
24							
26							
28							

NOTES: MEASURING POINT ELEVATIONS MAY CHANGE; REFER TO CURRENT ELEVATION TABLE
WATER FOUND ▽ 11/18/09
GRAIN SIZE ANALYSIS ☐

OVERBURDEN LOG 019190.GPJ CRA_CORP.GDT 11/19/09

STRATIGRAPHIC AND INSTRUMENTATION LOG (OVERBURDEN)

PROJECT NAME: Radio Materials Corporation
PROJECT NUMBER: 019190
CLIENT:
LOCATION: Attica, Indiana
DRILLING CONTRACTOR: ESI

HOLE DESIGNATION: DB-7
DATE COMPLETED: November 17, 2009
DRILLING METHOD: DPT
FIELD PERSONNEL: J. Phillips

DEPTH ft BGS	STRATIGRAPHIC DESCRIPTION & REMARKS	ELEV. ft AMSL	BOREHOLE	SAMPLE NUMBER	SAMPLE INTERVAL	SAMPLE REC (ft)	SAMPLE 'N' VALUE
	GROUND SURFACE	597.3					
0	TOPSOIL	596.4					
2	CH CLAY, sandy (coarse grained), firm, high plasticity, brown, moist			1	P/S	3.0	
4	GM SILTY GRAVEL, sandy (fine to medium grained), slightly compact, brown, moist	593.3					
6	- slightly moist at 5.5ft BGS						
8			Backfilled with Bentonite Chips and Soil Cuttings	2	P/S	1.5	
10							
12							
14				3	P/S	1.5	
16	- refusal at 16.0ft BGS	581.4					
	SHALE, weathered, gray	581.3					
	END OF BOREHOLE @ 16.0ft BGS						
18							
20							
22							
24							
26							
28							

NOTES: MEASURING POINT ELEVATIONS MAY CHANGE; REFER TO CURRENT ELEVATION TABLE

STRATIGRAPHIC AND INSTRUMENTATION LOG (OVERBURDEN)

PROJECT NAME: Radio Materials Corporation
PROJECT NUMBER: 019190
CLIENT:
LOCATION: Attica, Indiana
DRILLING CONTRACTOR: ESI

HOLE DESIGNATION: DB-8
DATE COMPLETED: November 17, 2009
DRILLING METHOD: DPT
FIELD PERSONNEL: J. Phillips

DEPTH ft BGS	STRATIGRAPHIC DESCRIPTION & REMARKS	ELEV. ft AMSL	BOREHOLE	SAMPLE NUMBER	SAMPLE INTERVAL	SAMPLE REC (ft)	SAMPLE 'N' VALUE
	GROUND SURFACE	601.4					
0	TOPSOIL	600.4					
2	CH CLAY, gravelly, with silt and sand (fine to coarse grained), firm, high plasticity, reddish-brown, moist			1	P/S	3.5	
4	- slightly moist at 3.0ft BGS						
6	GM SILTY GRAVEL, sandy (fine to coarse grained), slightly compact, reddish-brown, moist	596.4		2	P/S	2.0	
8							
10			Backfilled with Bentonite Chips and Soil Cuttings				
12	- sand seam, fine to medium grained, white from 11.7 to 12.3ft BGS			3	P/S	5.0	
14							
16	ML SILT, with fine gravel, trace coarse grained sand, stiff, no plasticity, gray, moist	585.6					
18	- dry at 18.1ft BGS			4	P/S	5.0	
20	SHALE, weathered	582.3					
	END OF BOREHOLE @ 20.0ft BGS	581.4					
22							
24							
26							
28							

NOTES: MEASURING POINT ELEVATIONS MAY CHANGE; REFER TO CURRENT ELEVATION TABLE

STRATIGRAPHIC AND INSTRUMENTATION LOG (OVERBURDEN)

PROJECT NAME: Radio Materials Corporation
PROJECT NUMBER: 019190
CLIENT:
LOCATION: Attica, Indiana
DRILLING CONTRACTOR: ESI

HOLE DESIGNATION: DB-9
DATE COMPLETED: November 17, 2009
DRILLING METHOD: DPT
FIELD PERSONNEL: J. Phillips

DEPTH ft BGS	STRATIGRAPHIC DESCRIPTION & REMARKS	ELEV. ft AMSL	BOREHOLE	SAMPLE NUMBER	SAMPLE INTERVAL	SAMPLE REC (ft)	SAMPLE 'N' VALUE
	GROUND SURFACE	607.4					
0	TOPSOIL	607.0					
	CH CLAY, with silt, trace medium grained sand, firm, high plasticity, brown, moist						
2	- gravelly, fine at 1.7ft BGS			1	P/S	3.7	
4							
	GM SILTY GRAVEL, sandy (fine to coarse grained), slightly compact, reddish-brown, dry, iron staining	602.4					
6							
8				2	P/S	2.1	
10							
	SM SILTY SAND, trace fine gravel, compact, fine to coarse grained, brown, slightly moist	596.3					
12			Backfilled with Bentonite Chips and Soil Cuttings				
14				3	P/S	3.0	
16							
18	- wet at 18.0ft BGS		▽	4	P/S	3.5	
20							
	- fine gravel seam, saturated at 21.6ft BGS			21.6-22'			
22	CL-ML SILTY CLAY, with coarse grained sand, hard, low plasticity, brown, moist, iron staining	585.4		5	P/S	4.0	
24	- gray, slightly moist at 22.4ft BGS						
	- weathered, gray shale, refusal at 25.0ft BGS	582.4					
26	END OF BOREHOLE @ 25.0ft BGS						
28							

NOTES: MEASURING POINT ELEVATIONS MAY CHANGE; REFER TO CURRENT ELEVATION TABLE
WATER FOUND ▽ 11/17/09
GRAIN SIZE ANALYSIS

STRATIGRAPHIC AND INSTRUMENTATION LOG (OVERBURDEN)

PROJECT NAME: Radio Materials Corporation
PROJECT NUMBER: 019190
CLIENT:
LOCATION: Attica, Indiana
DRILLING CONTRACTOR: ESI

HOLE DESIGNATION: DB-10
DATE COMPLETED: November 18, 2009
DRILLING METHOD: Hollow Stem Auger
FIELD PERSONNEL: J. Phillips

DEPTH ft BGS	STRATIGRAPHIC DESCRIPTION & REMARKS	ELEV. ft AMSL	BOREHOLE	SAMPLE NUMBER	SAMPLE INTERVAL	SAMPLE REC (ft)	SAMPLE 'N' VALUE
	GROUND SURFACE	596.5					
0	TOPSOIL	595.6		1		1.7	8
2	CH CLAY, with silt, trace medium grained sand, firm, medium to high plasticity, dark brown, moist, iron staining	594.0		2		1.1	8
4	GM SILTY GRAVEL, sandy (fine to medium grained), firm, reddish-brown, moist	590.5		3		1.1	14
6	no recovery	588.5	▽ Backfilled with Bentonite Chips and Soil Cuttings	4		0.0	28
8	GM SILTY GRAVEL, sandy (fine to medium grained), stiff, reddish-brown, wet			5		0.5	12
10				6		0.6	7
12	- very stiff, saturated at 12.0ft BGS	582.0		7		0.3	18
14	CH CLAY, with silt, trace fine to medium grained sand, trace fine gravel, very stiff, high plasticity, brown, moist	580.5		8		1.8	20
16	END OF BOREHOLE @ 16.0ft BGS						
18	Note: Geotechnical soil samples collected from each 2-foot interval						
20							
22							
24							
26							
28							

NOTES: MEASURING POINT ELEVATIONS MAY CHANGE; REFER TO CURRENT ELEVATION TABLE
WATER FOUND ▽ 11/18/09

OVERBURDEN LOG 019190.GPJ CRA_CORP.GDT 11/19/09

STRATIGRAPHIC AND INSTRUMENTATION LOG (OVERBURDEN)

PROJECT NAME: Radio Materials Corporation
PROJECT NUMBER: 019190
CLIENT:
LOCATION: Attica, Indiana
DRILLING CONTRACTOR: ESI

HOLE DESIGNATION: DB-11
DATE COMPLETED: November 18, 2009
DRILLING METHOD: Hollow Stem Auger
FIELD PERSONNEL: J. Phillips

DEPTH ft BGS	STRATIGRAPHIC DESCRIPTION & REMARKS	ELEV. ft AMSL	BOREHOLE	SAMPLE NUMBER	SAMPLE INTERVAL	SAMPLE REC (ft)	SAMPLE 'N' VALUE
	GROUND SURFACE	598.9					
0	TOPSOIL	598.4					
	CH CLAY, with silt and coarse grained sand, soft to firm, high plasticity, dark brown, moist	597.7		1		1.2	4
2	GM SILTY GRAVEL, sandy (fine to medium grained), loose, brown, moist			2		1.2	8
4				3		0.9	10
6	- wet from 6.9 to 7.2ft BGS		▽	4		1.0	13
8			Backfilled with Bentonite Chips and Soil Cuttings	5		1.0	16
10				6		1.3	26
12				7		1.4	20
14	- saturated at 13.7ft BGS			8		1.5	16
16	CH CLAY, with silt, trace fine sand, very stiff, high plasticity, reddish-brown, moist	583.2					
	END OF BOREHOLE @ 16.0ft BGS	582.9					
18	Note: Geotechnical soil samples collected from each 2-foot interval						
20							
22							
24							
26							
28							

NOTES: MEASURING POINT ELEVATIONS MAY CHANGE; REFER TO CURRENT ELEVATION TABLE
WATER FOUND ▽ 11/18/09

STRATIGRAPHIC AND INSTRUMENTATION LOG (OVERBURDEN)

PROJECT NAME: Radio Materials Corporation
PROJECT NUMBER: 019190
CLIENT:
LOCATION: Attica, Indiana
DRILLING CONTRACTOR: ESI

HOLE DESIGNATION: DB-12
DATE COMPLETED: November 17, 2009
DRILLING METHOD: Hollow Stem Auger
FIELD PERSONNEL: J. Phillips

DEPTH ft BGS	STRATIGRAPHIC DESCRIPTION & REMARKS	ELEV. ft AMSL	BOREHOLE	SAMPLE NUMBER	SAMPLE INTERVAL	SAMPLE REC (ft)	SAMPLE 'N' VALUE
	GROUND SURFACE	661.3					
0	TOPSOIL	660.8	Bentonite Cap				
	CH CLAY, with silt, with medium grained sand, trace medium gravel, firm, medium to high plasticity, brown, moist			1		1.3	6
2				2		1.4	5
4	- silty sand (coarse to medium grained), with fine gravel at 4.5ft BGS - stiff, dark brown at 4.8ft BGS			3		1.3	9
6	- gray, iron staining at 7.0ft BGS			4		1.8	9
8			Backfilled with Native Soil	5		1.4	13
10	- firm at 10.0ft BGS			6		2.0	8
12	- very soft, very moist at 12.0ft BGS			7		2.0	2
14	- stiff, moist, heavy iron staining, with vertical fracturing at 14.0ft BGS			8		1.5	10
16	END OF BOREHOLE @ 16.0ft BGS	645.3					
	Note: Geotechnical soil samples collected from each 2-foot interval						
18							
20							
22							
24							
26							
28							

NOTES: MEASURING POINT ELEVATIONS MAY CHANGE; REFER TO CURRENT ELEVATION TABLE

STRATIGRAPHIC AND INSTRUMENTATION LOG (OVERBURDEN)

PROJECT NAME: Radio Materials Corporation
PROJECT NUMBER: 019190
CLIENT:
LOCATION: Attica, Indiana
DRILLING CONTRACTOR: ESI

HOLE DESIGNATION: DB-13
DATE COMPLETED: November 17, 2009
DRILLING METHOD: Hollow Stem Auger
FIELD PERSONNEL: J. Phillips

DEPTH ft BGS	STRATIGRAPHIC DESCRIPTION & REMARKS	ELEV. ft AMSL
	GROUND SURFACE	660.9
0	TOPSOIL	660.6
	CL-ML SILTY CLAY, with fine gravel, firm, low to medium plasticity, brown, moist	
	- silty sand seam (coarse), with fine gravel from 5.0 to 5.4ft BGS	
	CH CLAY, with silt, trace coarse grained sand, firm, high plasticity, gray	654.4
	- with medium gravel, coarse grained sand, saturated from 8.4 to 9.0ft BGS	
	- very soft, very moist at 14.0ft BGS	
	- stiff at 15.0ft BGS	
16	END OF BOREHOLE @ 16.0ft BGS	644.9
	Note: Geotechnical soil samples collected from each 2-foot interval	

BOREHOLE: Backfilled with Bentonite Chips and Soil Cuttings

SAMPLE NUMBER	INTERVAL	REC (ft)	'N' VALUE
1		1.2	6
2		1.5	6
3		0.6	16
4		1.8	8
5		2.0	12
6		2.0	9
7		2.0	2
8		2.0	9

NOTES: MEASURING POINT ELEVATIONS MAY CHANGE; REFER TO CURRENT ELEVATION TABLE

APPENDIX B

GRAIN-SIZE CURVES

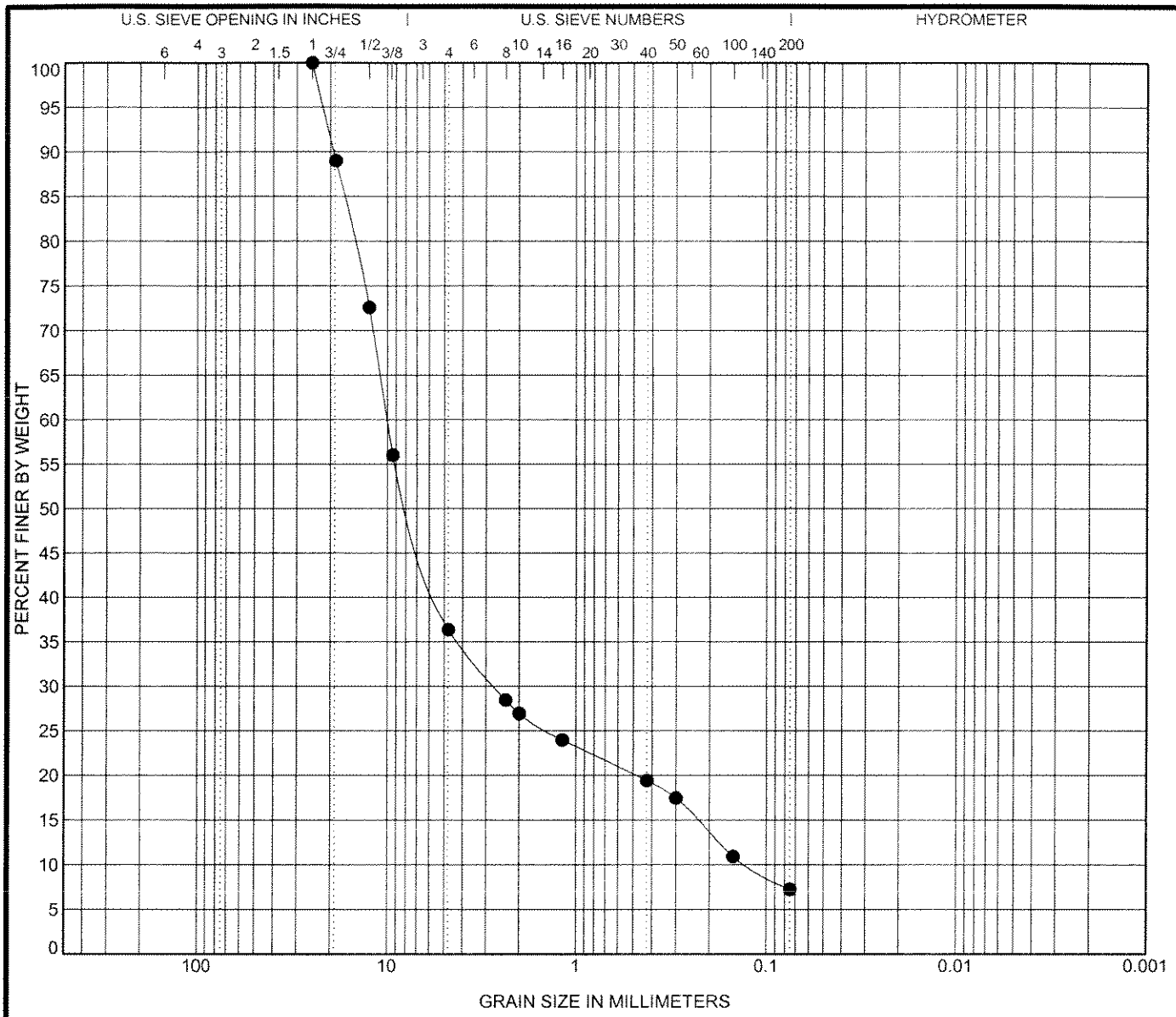

COBBLES	GRAVEL		SAND			SILT OR CLAY
	coarse	fine	coarse	medium	fine	

	Specimen Identification		Classification	LL	PL	PI	Cc	Cu
●	**DB-1**	**5.2**	**(GP-GM) Sandy GRAVEL, trace silt, brown**				**5.77**	**79.86**

	Specimen Identification		D100	D60	D30	D10	%Gravel	%Sand	%Silt	%Clay
●	**DB-1**	**5.2**	**25**	**10.043**	**2.7**	**0.126**	**63.6**	**29.1**	**7.3**	

INSPECSOL ENGINEERING INC.
MEMBER OF THE CRA FAMILY OF COMPANIES

GRAIN SIZE DISTRIBUTION

Project Name: Radio Materials Corporation
Project Number: 019190-02
Client: Radio Materials Corporation
Location: Attica, IN

Test by: RB Checked by: MLP

GRAIN SIZE 019190-02.GPJ CRA PLYMOUTH.GDT 12/7/09

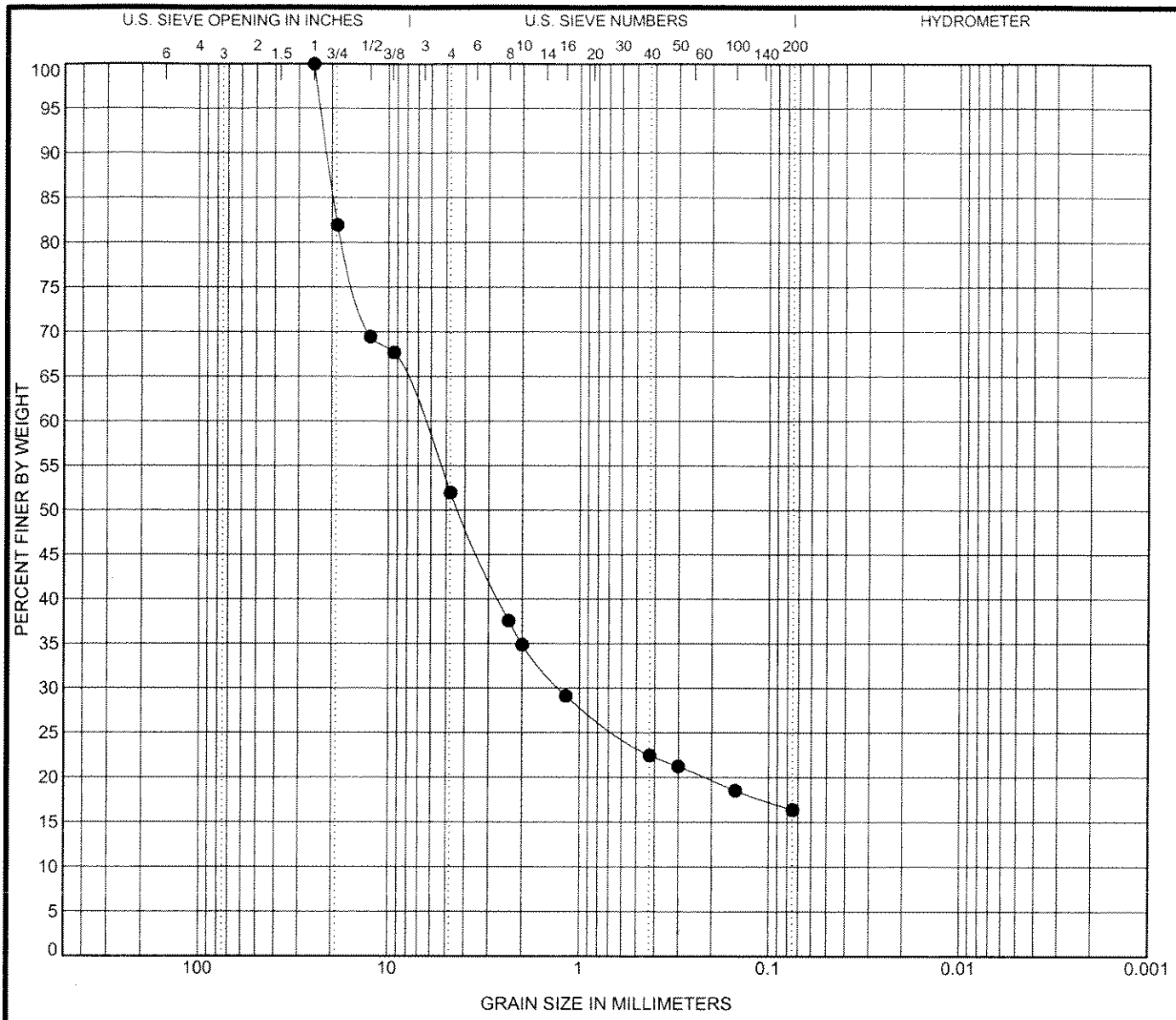

COBBLES	GRAVEL		SAND			SILT OR CLAY
	coarse	fine	coarse	medium	fine	

	Specimen Identification		Classification	LL	PL	PI	Cc	Cu
●	DB-2	5.8	(GM) SAND and GRAVEL with silt, brown					

	Specimen Identification		D100	D60	D30	D10	%Gravel	%Sand	%Silt	%Clay
●	DB-2	5.8	25	6.716	1.277		48.0	35.6	16.4	

INSPECSOL ENGINEERING INC.
MEMBER OF THE CRA FAMILY OF COMPANIES

GRAIN SIZE DISTRIBUTION

Project Name: Radio Materials Corporation
Project Number: 019190-02
Client: Radio Materials Corporation
Location: Attica, IN

Test by: EEB Checked by: MW

GRAIN SIZE 019190-02.GPJ CRA PLYMOUTH.GDT 12/7/09

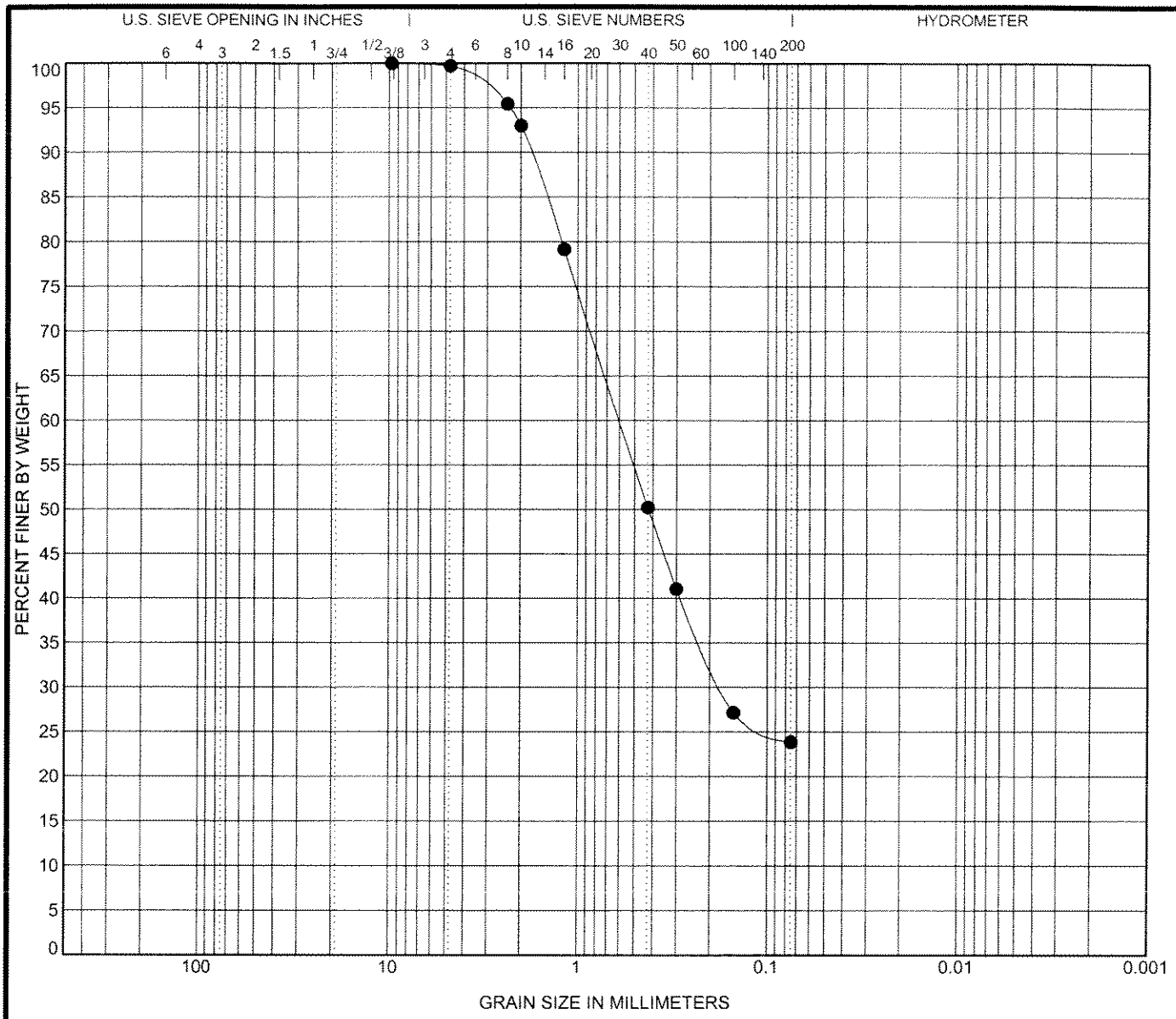

COBBLES	GRAVEL		SAND			SILT OR CLAY
	coarse	fine	coarse	medium	fine	

	Specimen Identification		Classification	LL	PL	PI	Cc	Cu
●	DB-2	10	(SM) Silty SAND, trace gravel, brown.					

	Specimen Identification		D100	D60	D30	D10	%Gravel	%Sand	%Silt	%Clay
●	DB-2	10	9.735	0.6	0.173		0.3	75.9	23.9	

INSPECSOL ENGINEERING INC.
MEMBER OF THE CRA FAMILY OF COMPANIES

GRAIN SIZE DISTRIBUTION

Project Name: Radio Materials Corporation
Project Number: 019190-02
Client: Radio Materials Corporation
Location: Attica, IN

Test by: _____ Checked by: _____

GRAIN SIZE 019190-02.GPJ CRA PLYMOUTH.GDT 12/7/09

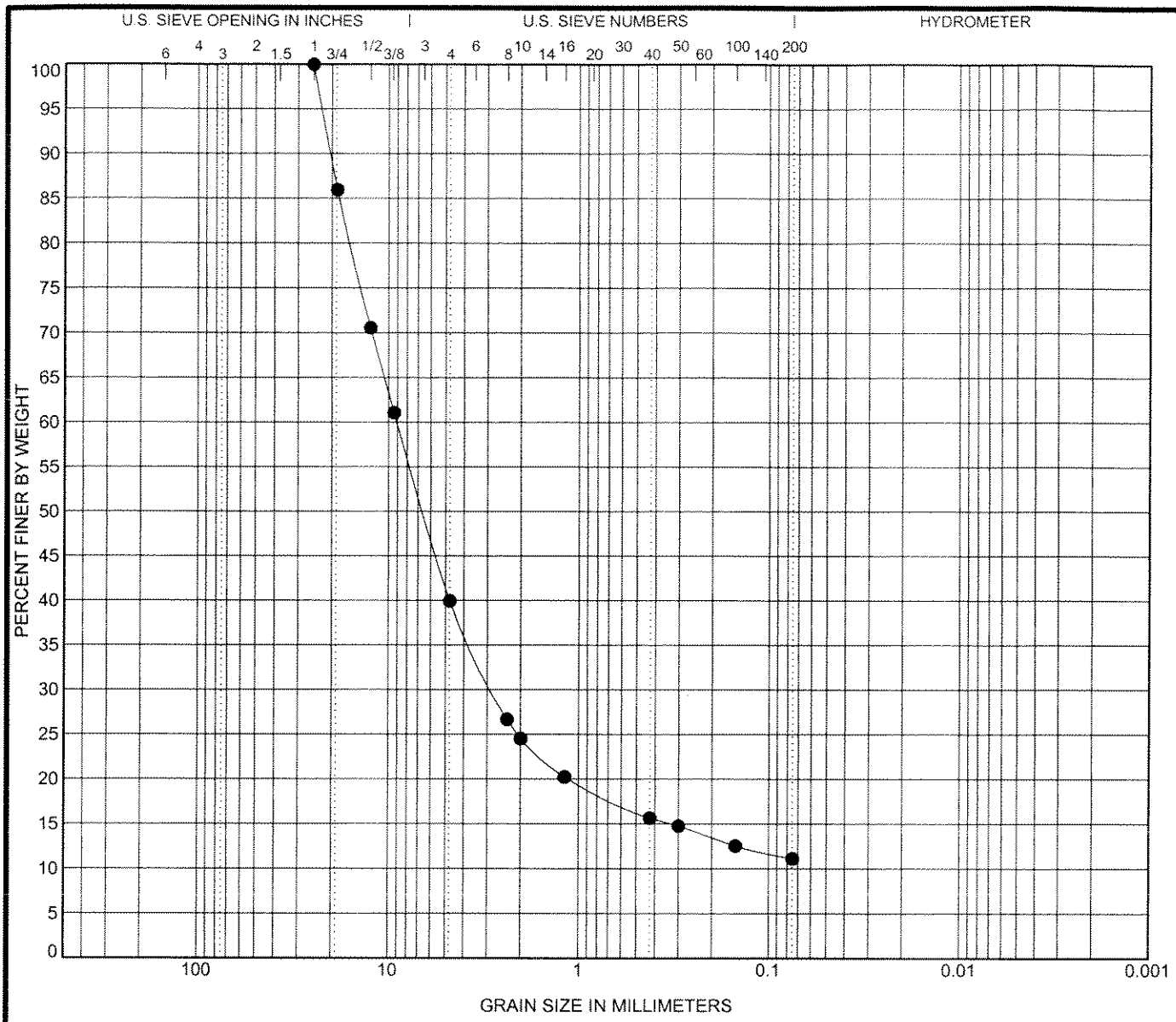

COBBLES	GRAVEL		SAND			SILT OR CLAY
	coarse	fine	coarse	medium	fine	

	Specimen Identification		Classification	LL	PL	PI	Cc	Cu
●	**DB-3**	**10**	**(GP-GM) Sandy GRAVEL with silt, brown**				**20.31**	**210.80**

	Specimen Identification		D100	D60	D30	D10	%Gravel	%Sand	%Silt	%Clay
●	**DB-3**	**10**	**25**	**9.054**	**2.811**		**60.0**	**28.8**	**11.1**	

INSPECSOL ENGINEERING INC.
MEMBER OF THE CRA FAMILY OF COMPANIES

GRAIN SIZE DISTRIBUTION

Project Name: Radio Materials Corporation
Project Number: 019190-02
Client: Radio Materials Corporation
Location: Attica, IN

Test by: [signature] Checked by: [signature]

GRAIN SIZE 019190-02.GPJ CRA PLYMOUTH.GDT 12/7/09

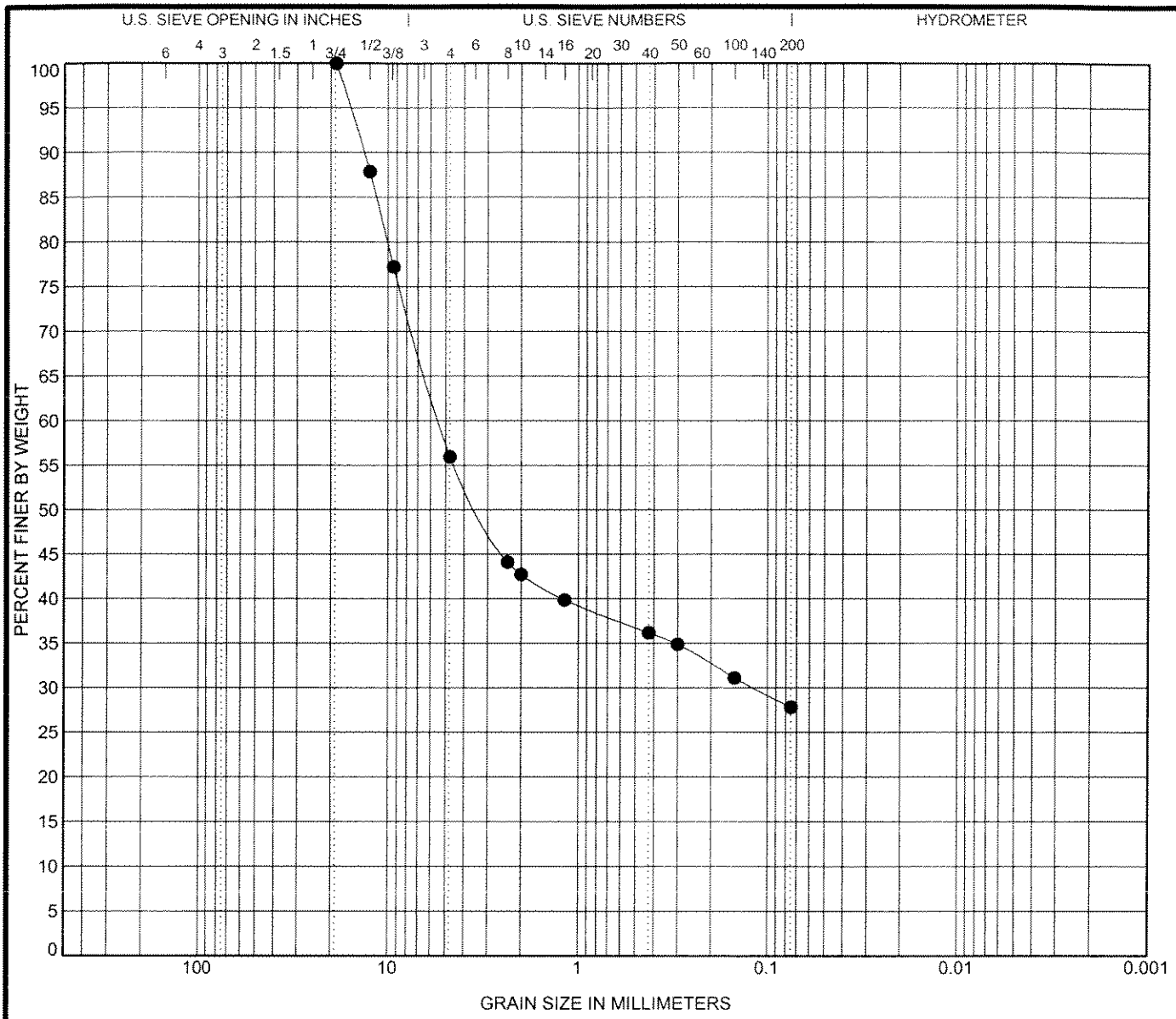

COBBLES	GRAVEL		SAND			SILT OR CLAY
	coarse	fine	coarse	medium	fine	

	Specimen Identification		Classification	LL	PL	PI	Cc	Cu
●	**DB-4**	**5**	**(GM) Silty, sandy GRAVEL, brown**					

	Specimen Identification		D100	D60	D30	D10	%Gravel	%Sand	%Silt	%Clay
●	**DB-4**	**5**	**18.75**	**5.404**	**0.119**		**44.0**	**28.1**	**27.8**	

INSPECSOL ENGINEERING INC.
MEMBER OF THE CRA FAMILY OF COMPANIES

GRAIN SIZE DISTRIBUTION

Project Name: Radio Materials Corporation
Project Number: 019190-02
Client: Radio Materials Corporation
Location: Attica, IN

Test by: [signature] Checked by: [signature]

GRAIN SIZE 019190-02.GPJ CRA PLYMOUTH.GDT 12/7/09

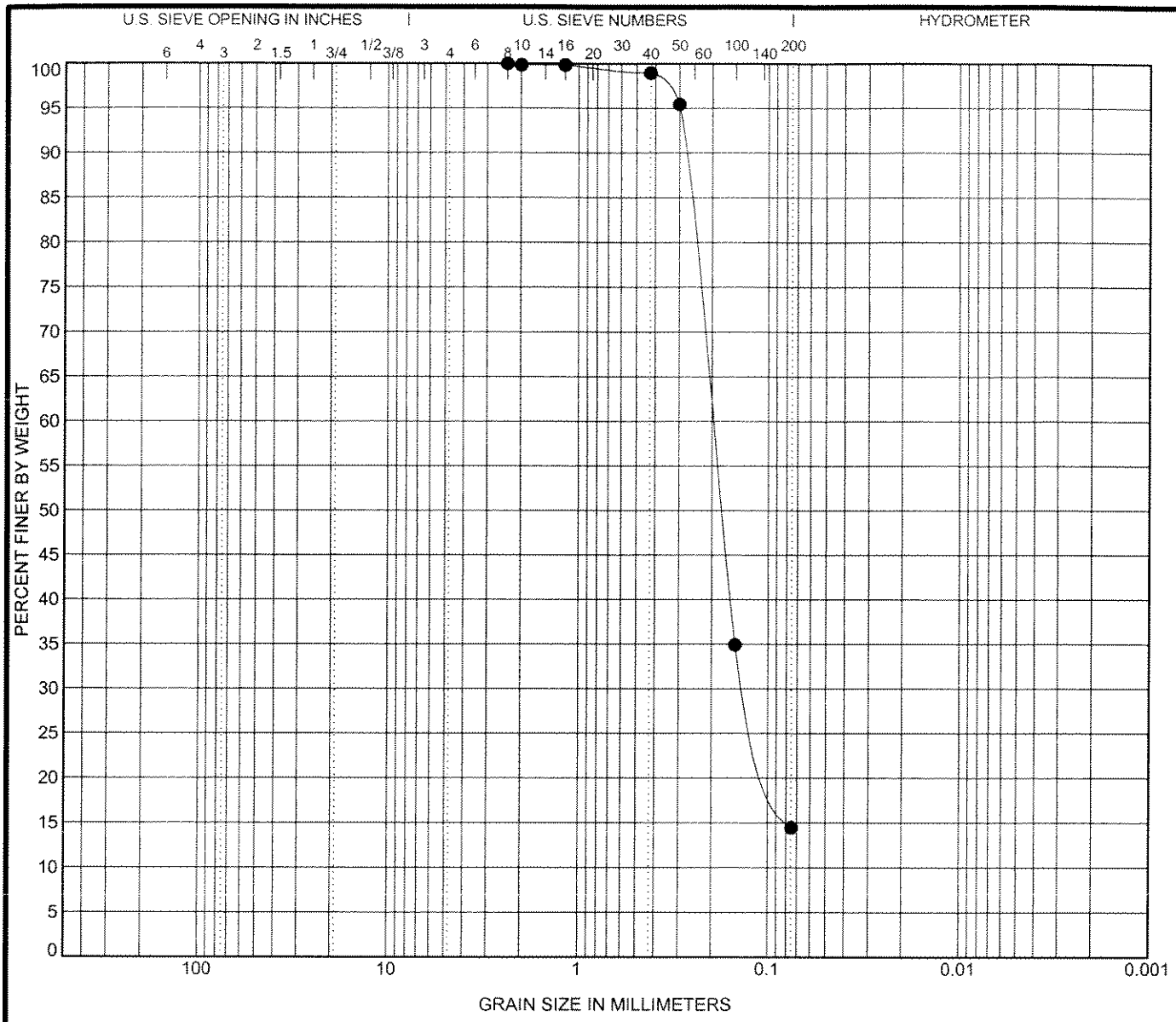

COBBLES	GRAVEL		SAND			SILT OR CLAY
	coarse	fine	coarse	medium	fine	

Specimen Identification		Classification	LL	PL	PI	Cc	Cu
● DB-4	9.7	(SM) SAND with silt, light brown					

Specimen Identification		D100	D60	D30	D10	%Gravel	%Sand	%Silt	%Clay
● DB-4	9.7	2.36	0.2	0.127		0.0	85.5	14.5	

INSPECSOL ENGINEERING INC.
MEMBER OF THE CRA FAMILY OF COMPANIES

GRAIN SIZE DISTRIBUTION

Project Name: Radio Materials Corporation
Project Number: 019190-02
Client: Radio Materials Corporation
Location: Attica, IN

Test by: RES Checked by: MWH

GRAIN SIZE 019190-02.GPJ CRA PLYMOUTH.GDT 12/7/09

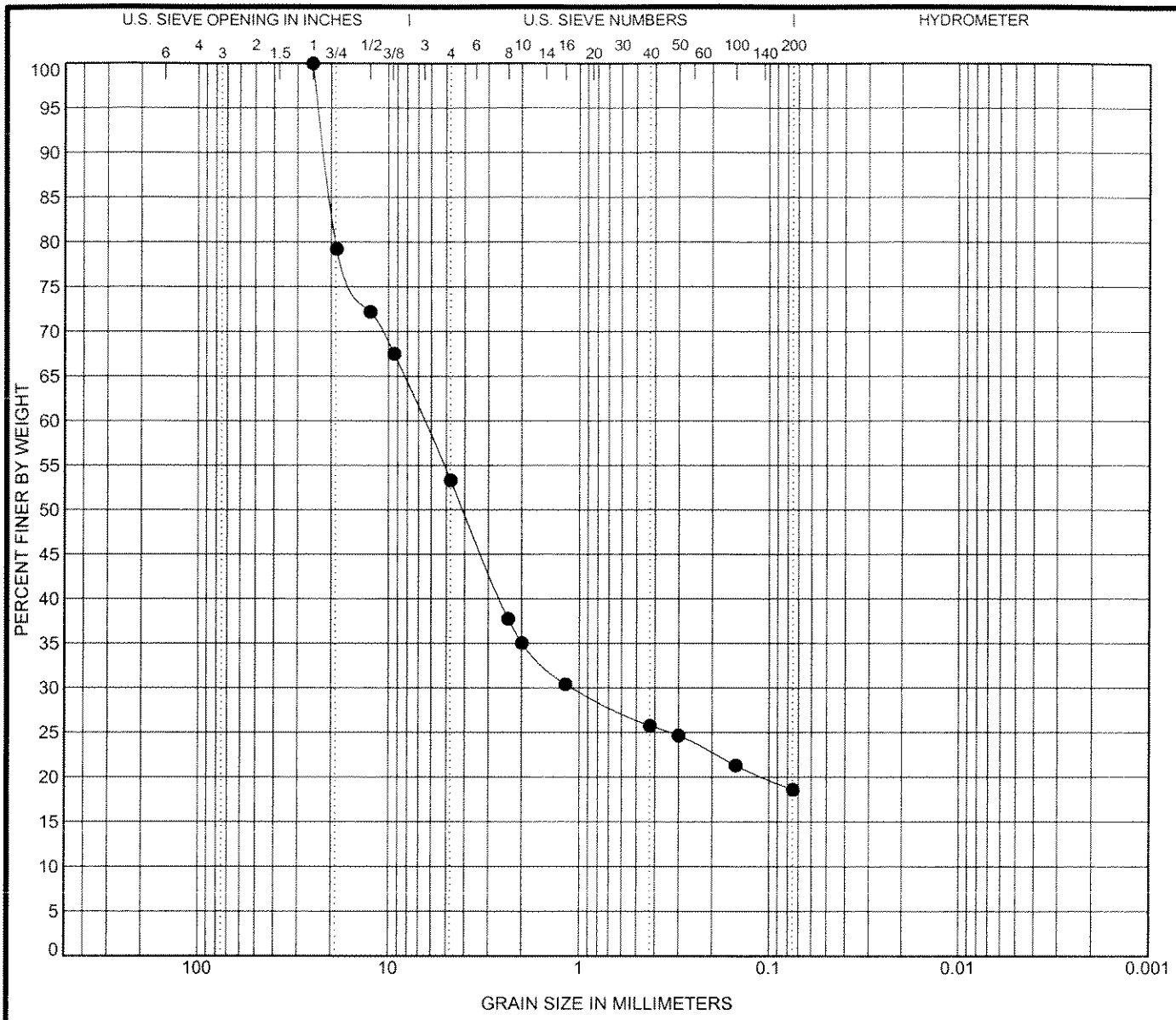

COBBLES	GRAVEL		SAND			SILT OR CLAY
	coarse	fine	coarse	medium	fine	

	Specimen Identification		Classification	LL	PL	PI	Cc	Cu
●	**DB-5**	**6.4**	**(GM) Sandy GRAVEL with silt, brown**					

	Specimen Identification		D100	D60	D30	D10	%Gravel	%Sand	%Silt	%Clay
●	**DB-5**	**6.4**	**25**	**6.538**	**1.078**		**46.7**	**34.7**	**18.6**	

INSPECSOL ENGINEERING INC.
MEMBER OF THE CRA FAMILY OF COMPANIES

GRAIN SIZE DISTRIBUTION

Project Name: Radio Materials Corporation
Project Number: 019190-02
Client: Radio Materials Corporation
Location: Attica, IN

Test by: PEB Checked by: [signature]

GRAIN SIZE 019190-02.GPJ CRA PLYMOUTH.GDT 12/7/09

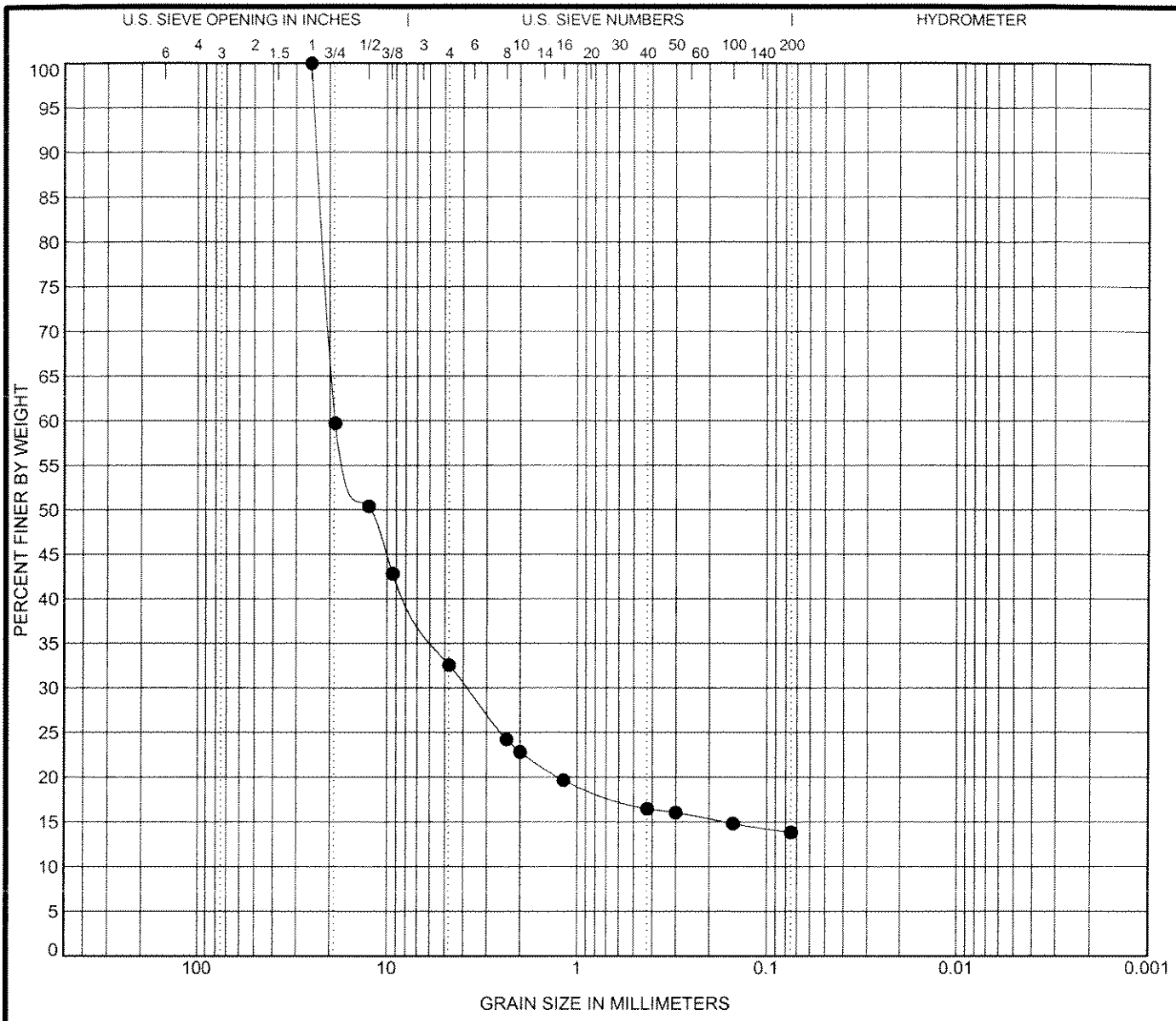

COBBLES	GRAVEL		SAND			SILT OR CLAY
	coarse	fine	coarse	medium	fine	

	Specimen Identification		Classification	LL	PL	PI	Cc	Cu
●	**DB-6**	**10**	**(GM) GRAVEL with sand and silt, brown**					

	Specimen Identification		D100	D60	D30	D10	%Gravel	%Sand	%Silt	%Clay
●	**DB-6**	**10**	**25**	**18.787**	**3.83**		**67.4**	**18.7**	**13.8**	

iNSPECSOL ENGINEERING INC.
MEMBER OF THE CRA FAMILY OF COMPANIES

GRAIN SIZE DISTRIBUTION

Project Name: Radio Materials Corporation
Project Number: 019190-02
Client: Radio Materials Corporation
Location: Attica, IN

Test by: Checked by:

GRAIN SIZE 019190-02.GPJ CRA PLYMOUTH.GDT 12/7/09

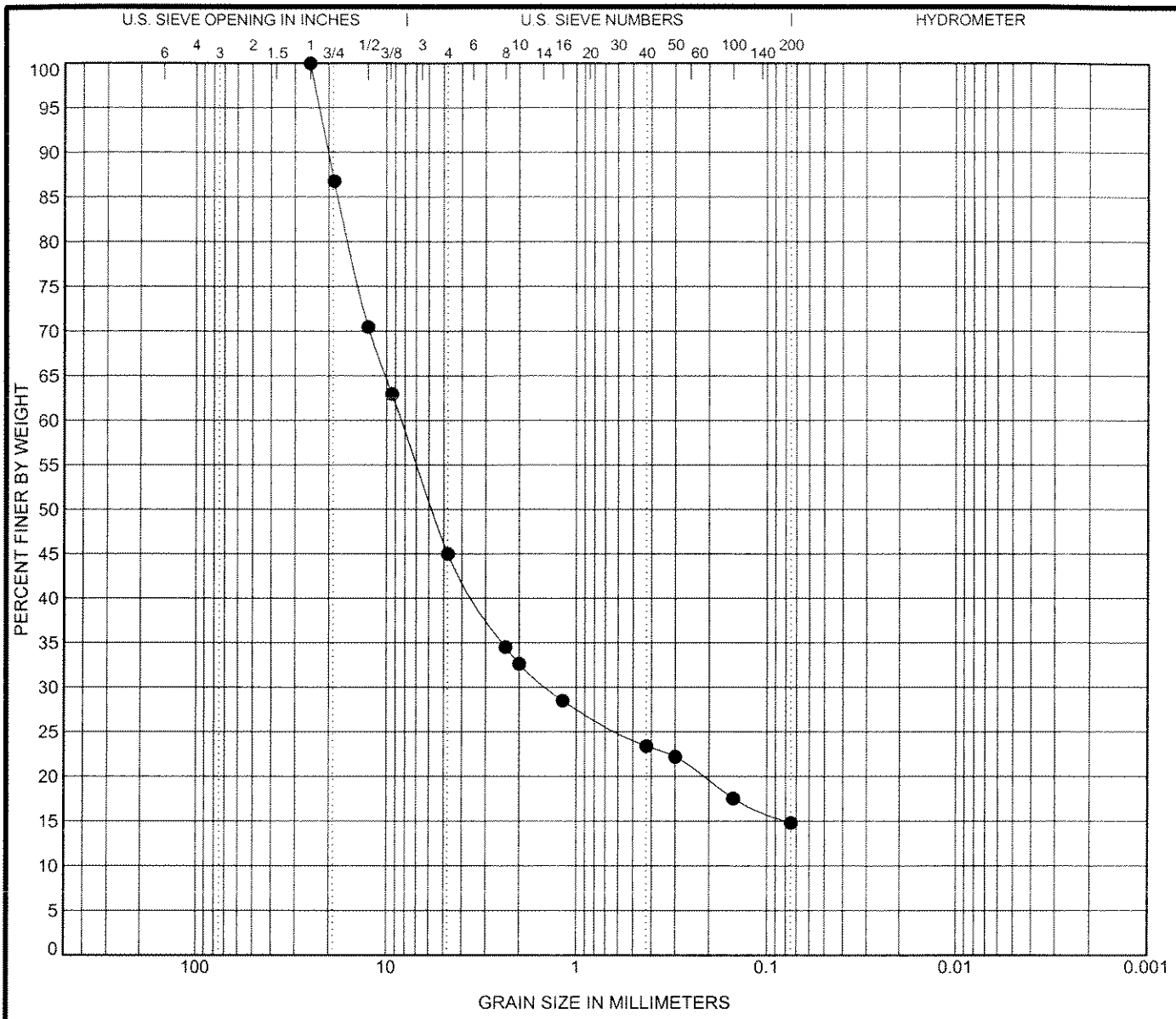

COBBLES	GRAVEL		SAND			SILT OR CLAY
	coarse	fine	coarse	medium	fine	

	Specimen Identification		Classification	LL	PL	PI	Cc	Cu
●	**DB-9**	**0**	**(GM) Sandy GRAVEL with silt, brown**					

	Specimen Identification		D100	D60	D30	D10	%Gravel	%Sand	%Silt	%Clay
●	**DB-9**	**0**	**25**	**8.376**	**1.427**		**55.0**	**30.2**	**14.8**	

INSPECSOL ENGINEERING INC.
MEMBER OF THE CRA FAMILY OF COMPANIES

GRAIN SIZE DISTRIBUTION

Project Name: Radio Materials Corporation
Project Number: 019190-02
Client: Radio Materials Corporation
Location: Attica, IN

Test by: RDB Checked by: MWH

GRAIN SIZE 019190-02.GPJ CRA PLYMOUTH.GDT 12/7/09

APPENDIX C

GEOTECHNICAL REPORT

INSPECSOL
ENGINEERING INC.
MEMBER OF THE CRA FAMILY OF COMPANIES

14496 Sheldon Road, Suite #200
Plymouth, Michigan 48170
Telephone: (734) 453-5123 Fax: (734) 453-5201
www.inspecsol.com

MEMORANDUM

TO: Walter Pochron – CRA Chicago REF. NO.: 019190-02

FROM: Rebecca E. Bentley/Michael C. Gentner/ma/2 DATE: December 14, 2009

RE: Radio Materials Corporation
Interim Corrective Measures Geotechnical Recommendations
Attica, Indiana

This memo summarizes the geotechnical evaluation and analysis for the proposed Interim Corrective Measures (ICM) structures for the Radio Materials Corporation (RMC) site in the city of Attica, Indiana. Specifically, geotechnical recommendations are provided with respect to foundation construction and settlement for the planned pre-engineered, pre-fabricated metal buildings. The planned groundwater treatment building will be approximately 37 ft by 42 ft in area, and will house an equalization tank, feed pump, bag filters and a shallow tray air stripper. The planned Air Sparge/SVE building will be approximately 20 ft by 24 ft in area and house blower and compressor equipment.

Four borings were drilled within the footprints of the proposed buildings (two at each building area). The borings were located in the field by CRA representatives. CRA also provided oversight and soil logging during drilling operations. Soil samples obtained during drilling operations were sent to Inspecsol's Plymouth, Michigan laboratory for visual classification and analysis. All four borings were drilled to 16 feet below existing site grades. Laboratory results for each boring are attached to this memo.

Borings DB-10 and DB-11 were drilled within the footprint of the Air Sparge/SVE building. Surficial topsoil was encountered at borings DB-10 and DB-11, and was underlain by 1.5 to 2.0 feet of clayey sand (SC) or sandy clay (CL). Sand and gravel (GM) was encountered below the clayey sand and sandy clay, and extended in depth from 14 to 15.5 feet below existing site grades. Silty clay (CL) was encountered below the sand and gravel layer and extended to the explored depths of the borings. Standard Penetration Test (SPT) "N" values ranged from 4 to 28 blows per foot (bpf), with an average N-value of 14. Moisture contents for DB-10 and DB-11 ranged from 6 to 20 percent. Groundwater was encountered between 6.9 and 8 ft below existing site grades.

DB-12 and DB-13 were drilled within the footprint of the groundwater treatment building. Surfical topsoil at DB-12 was underlain by approximately 5 feet of clayey sand (SC) and sandy clay (CL), with silty clay (CL) below. At DB-13 the silty clay (CL) was encountered directly below the surficial topsoil. At both boring locations, the silty clay extended to the explored depths of the borings, with a 2-foot granular layer (clayey sand and clayey silt) encountered at approximately 12 ft. Standard Penetration Test (SPT) "N" values ranged from 2 to 16 blows per foot (bpf), with an average N-value of 8. Moisture contents for DB-12 and DB-13 ranged from 14 to 27 percent. Groundwater was not encountered at DB-12 or DB-13.

Our recommendations are based on the results of the field and laboratory testing, and our geotechnical analysis. The proposed building structures can be constructed on conventional spread footing foundations. A net allowable bearing capacity of 2,000 pounds per square foot (psf) can be used in design for foundations

bearing on the native sand and gravel, or clay strata encountered at the site. The net allowable bearing capacity is that pressure that can be transmitted to the bearing strata in excess of the final minimum overburden pressure near the footing. We recommend that footings at the exterior or unheated areas be constructed a minimum of 3.5 feet below final exterior grades for frost protection. Interior footings in heated areas can be constructed at a minimum depth of 1.5 feet below the slab elevation.

We recommend that individual column footings have a minimum width of 2.0 feet, and continuous footings have a minimum width of 1.5 feet. We anticipate total settlement of footings constructed as recommended herein to be less than ½ inch.

The base of all foundation excavations should be inspected by qualified geotechnical personnel prior to concrete placement, to confirm the design bearing pressures and material adequacy of the foundation soil.

Depending on the final site grading levels, the subgrade for the slab-on-grade construction will likely consist of native clayey sand to silty clay soils. These soils are considered suitable to support a conventional slab according to ACI 330R.

Slabs should be provided with reinforcement to maintain the integrity of the slab, should differential movement occur. The slab should be isolated from all foundations to allow differential movement between the slab and the footings to take place. In addition, to minimize potential damage due to concrete shrinkage, control joints and expansion joints should be provided at a proper timing and at suitable intervals, per ACI guidelines.

APPENDIX D

PROPERTY SURVEY DATA

RETRACEMENT SURVEY

PART OF THE N W QUARTER, SECTION 5, TOWNSHIP 21 NORTH, RANGE 7 WEST
CITY OF ATTICA , FOUNTAIN COUNTY, INDIANA

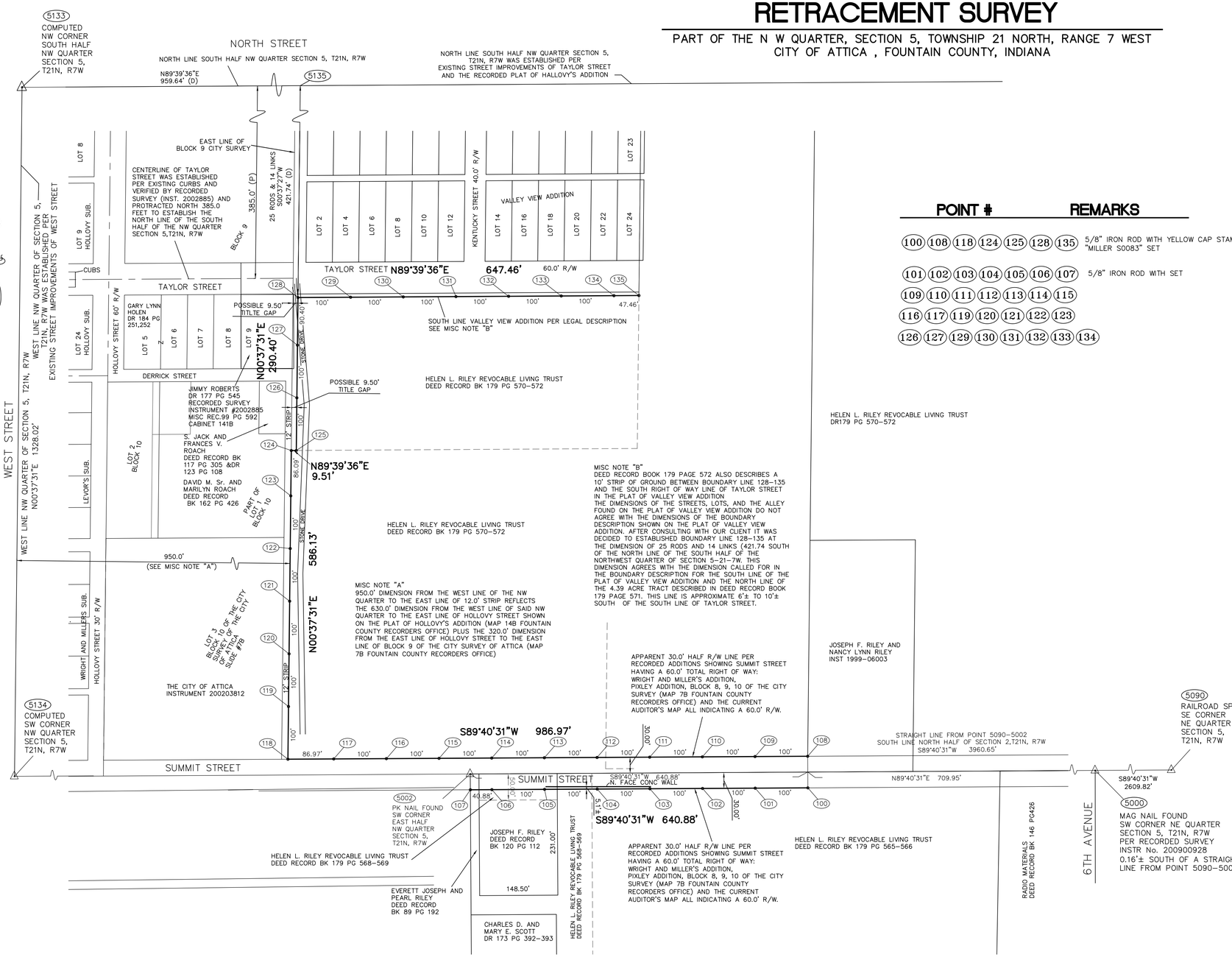

POINT # REMARKS

100 108 118 124 125 128 135 — 5/8" IRON ROD WITH YELLOW CAP STAMPED "MILLER S0083" SET

101 102 103 104 105 106 107 — 5/8" IRON ROD WITH SET
109 110 111 112 113 114 115
116 117 119 120 121 122 123
126 127 129 130 131 132 133 134

HELEN L. RILEY REVOCABLE LIVING TRUST DR179 PG 570-572

MISC NOTE "B"
DEED RECORD BOOK 179 PAGE 572 ALSO DESCRIBES A 10' STRIP OF GROUND BETWEEN BOUNDARY LINE 128-135 AND THE SOUTH RIGHT OF WAY LINE OF TAYLOR STREET IN THE PLAT OF VALLEY VIEW ADDITION THE DIMENSIONS OF THE STREETS, LOTS, AND THE ALLEY FOUND ON THE PLAT OF VALLEY VIEW ADDITION DO NOT AGREE WITH THE DIMENSIONS OF THE BOUNDARY DESCRIPTION SHOWN ON THE PLAT OF VALLEY VIEW ADDITION. AFTER CONSULTING WITH OUR CLIENT IT WAS DECIDED TO ESTABLISHED BOUNDARY LINE 128-135 AT THE DIMENSION OF 25 RODS AND 14 LINKS (421.74 SOUTH OF THE NORTH LINE OF THE SOUTH HALF OF THE NORTHWEST QUARTER OF SECTION 5-21-7W. THIS DIMENSION AGREES WITH THE DIMENSION CALLED FOR IN THE BOUNDARY DESCRIPTION FOR THE SOUTH LINE OF THE PLAT OF VALLEY VIEW ADDITION AND THE NORTH LINE OF THE 4.39 ACRE TRACT DESCRIBED IN DEED RECORD BOOK 179 PAGE 571. THIS LINE IS APPROXIMATE 6'± TO 10'± SOUTH OF THE SOUTH LINE OF TAYLOR STREET.

SURVEYOR'S REPORT

IN ACCORDANCE WITH TITLE 865, ARTICLE 1, CHAPTER 12 OF THE INDIANA ADMINISTRATIVE CODE ("RULE 12"), THE FOLLOWING OBSERVATIONS AND OPINIONS ARE SUBMITTED REGARDING THE VARIOUS UNCERTAINTIES IN THE LOCATIONS OF THE LINES AND CORNERS ESTABLISHED THIS SURVEY AS A RESULT OF UNCERTAINTIES IN REFERENCE MONUMENTATION; IN RECORD DESCRIPTIONS AND PLATS; IN LINES OF OCCUPATION; AND AS INTRODUCED BY RANDOM ERRORS IN MEASUREMENT ("RELATIVE POSITIONAL ACCURACY"). THERE MAY BE UNWRITTEN RIGHTS ASSOCIATED WITH THESE UNCERTAINTIES. THE CLIENT SHOULD ASSUME THERE IS AN AMOUNT OF UNCERTAINTY ALONG ANY LINE EQUAL IN MAGNITUDE TO THE DISCREPANCY IN THE LOCATION OF THE LINES OF POSSESSION FROM THE SURVEYED LINES.

THERE MAY BE DIFFERENCES OF DEED DIMENSIONS VERSUS MEASURED DIMENSIONS ALONG THE BOUNDARY LINES SHOWN HEREON AND LIKEWISE, THERE MAY BE FOUND SURVEY MARKERS NEAR, BUT NOT PRECISELY AT, SOME BOUNDARY CORNERS. IN CASES WHERE THE MAGNITUDE OF THESE DIFFERENCES ARE LESS THAN THE RELATIVE POSITIONAL ACCURACY AND LESS THAN THE UNCERTAINTY IDENTIFIED FOR THE REFERENCE MONUMENTATION (DISCUSSED BELOW), THE DIFFERENCES MAY BE CONSIDERED INSIGNIFICANT AND ARE SHOWN ONLY FOR PURPOSES OF MATHEMATICAL CLOSURE. SUCH DIFFERENCES THAT ARE GREATER THAN THE RELATIVE POSITIONAL ACCURACY AND THE UNCERTAINTY IN REFERENCE MONUMENTATION SHOULD BE CONSIDERED WORTHY OF NOTICE AND ARE THEREFORE DISCUSSED FURTHER BELOW.

THIS SURVEY AND REPORT ARE BASED IN PART UPON OPINIONS FORMED IN ACCORDANCE WITH AN INDIANA LAND SURVEYOR'S RESPONSIBILITY TO CONDUCT A SURVEY IN ACCORDANCE WITH "LAW OR A PRECEDENT" (865 IAC 1-12-11(5), RULES OF THE INDIANA STATE BOARD OF REGISTRATION FOR LAND SURVEYORS). SINCE INDIANA HAS NO STATUTES ADDRESSING HOW TO RESOLVE BOUNDARY LINES, A SOLUTION BASED ON PRINCIPLES DERIVED FROM COMMON LAW PRECEDENT MUST BE RELIED UPON AS THE BASIS FOR A BOUNDARY RESOLUTION. UNLESS OTHERWISE NOTED OR DEPICTED HEREON, THERE IS NO EVIDENCE OF OCCUPATION ALONG THE PERIMETER LINES OF THE SUBJECT TRACT. ALL SURVEY MONUMENTS SET OR FOUND THIS SURVEY ARE FLUSH WITH EXISTING GRADE UNLESS OTHERWISE NOTED.

THE RELATIVE POSITIONAL ACCURACY (DUE TO RANDOM ERRORS IN MEASUREMENT) OF THE CORNERS OF THE SUBJECT TRACT ESTABLISHED THIS SURVEY DOES NOT EXCEED THAT ALLOWABLE FOR A RURAL CLASS SURVEY (0.26 FEET PLUS 200 PPM) AS DEFINED IN IAC 865.

THE WITHIN SURVEY IS A RETRACEMENT SURVEY OF THE NORTH AND WEST LINES OF THE TRACT OF REAL ESTATE DESCRIBED IN DEED RECORD 179 PG 570-572. (LINE 128-135 AND LINE 125-128)

THE WITHIN SURVEY IS ALSO A RETRACEMENT SURVEY OF THE EAST LINE OF THE 12' STRIP FOUND ON BLOCK 10 OF THE CITY SURVEY OF BLOCK 8, 9, 10 THE CITY OF ATTICA (SLIDE #7B FOUNTAIN COUNTY RECORDERS OFFICE).

THE WITHIN SURVEY IS ALSO A RETRACEMENT SURVEY OF THE APPARENT NORTH AND SOUTH RIGHT OF WAY LINES OF SUMMIT STREET.

THE SOUTH LINE OF THE NORTH HALF OF SECTION 5, TOWNSHIP 21 NORTH, RANGE 7 WEST WAS ESTABLISHED BY A STRAIGHT LINE FROM POINT 5090-5002.

THE WEST LINE OF THE NORTHWEST QUARTER OF SAID SECTION 5 WAS ESTABLISHED PER EXISTING STREET IMPROVEMENTS OF WEST ROAD.

THE NORTH LINE OF THE SOUTH HALF OF THE NORTHWEST QUARTER OF SAID SECTION 5 WAS ESTABLISHED PER THE CENTERLINE OF TAYLOR STREET. THE CENTERLINE OF TAYLOR STREET WAS ESTABLISHED PER EXISTING CURBS PROTRACTED NORTH 385.0 FEET TO ESTABLISH THE NORTH LINE OF THE SOUTH HALF OF THE NORTHWEST QUARTER SECTION 5,T21N, R7W. (AS PER THE PLAT OF HOLLOVY'S ADDITION MAP 14B FOUNTAIN COUNTY RECORDERS OFFICE). A 5'± NORTH-SOUTH UNCERTAINTY EXISTS WITH THE NORTH LINE OF THE SOUTH HALF OF THE NORTHWEST QUARTER OF SECTOIN 5-21-7W AS ESTABLISHED BY THIS SURVEY.

THE APPARENT 30.0' HALF R/W LINE WAS ESTABLISHED PER RECORDED ADDITIONS SHOWING SUMMIT STREET HAVE A 60.0' TOTAL RIGHT OF WAY: WRIGHT AND MILLER'S ADDITION, PIXLEY ADDITION, BLOCK 8, 9, 10 OF THE CITY SURVEY (MAP 7B FOUNTAIN COUNTY RECORDERS OFFICE) AND THE CURRENT AUDITOR'S MAP ALL INDICATING A 60.0' R/W.

BASIS OF BEARING: ASSUMED BEARING

CONTROLLING MONUMENTS:

5002 S.W. CORNER, EAST HALF N.W. 1/4, SECTION 05-21-7W PK NAIL FOUND (PER RECORDED SURVEY INSTRUMENT No.200202383)

5090 S.E. CORNER, N.E. 1/4, SECTION 05-21-7W RAILROAD SPIKE FOUND (PER RECORDED SURVEY INSTRUMENT No.200900928)

5000 S.W. CORNER, N.E. 1/4, SECTION 05-21-7W MAG NAIL FOUND (PER RECORDED SURVEY INSTRUMENT No.200900928) MAG NAIL IS 0.16'± SOUTH OF A STRAIGHT LINE FROM POINT 5090-5002.

IN MY OPINION, THERE IS 0.5 FEET OF UNCERTAINTY IN THE LOCATION OF THESE MONUMENTS.

1. POSSESSION TO THE SOUTH IS THE IMPROVEMENTS OF SUMMIT STREET. POSSESSION TO THE NORTH IS TO THE IMPROVEMENTS OF TAYLOR STREET. NO EVIDENCE OF POSSESSION WAS FOUND TO THE WEST.

THERE IS A POSSIBLE TITLE GAP OF 9.5 FEET WITH LINE 125-128 AND THE WEST ADJOINER

2. THE ACCURACY OF ANY FLOOD HAZARD DATA SHOWN ON THIS REPORT IS SUBJECT TO MAP SCALE UNCERTAINTY AND TO ANY OTHER UNCERTAINTY IN LOCATION OR ELEVATION ON THE REFERENCED FLOOD INSURANCE RATE MAP. THE WITHIN DESCRIBED TRACT OF LAND LIES WITHIN FLOOD HAZARD ZONE "X" AS SAID TRACT PLOTS BY SCALE ON COMMUNITY PANEL NUMBER 180064 0003 A OF THE FLOOD INSURANCE RATE MAPS FOR FOUNTAIN COUNTY, INDIANA (MAPS DATED 11-4-1977, CONVERTED BY LETTER 11-1-01)

3. OWNERSHIP INFORMATION INDICATED HEREON IS AS IDENTIFIED IN COUNTY RECORDS.

4. THE WITHIN PLAT AND SURVEY WERE PREPARED WITHOUT BENEFIT OF A CURRENT TITLE POLICY FOR THE SUBJECT TRACT OR ADJOINERS AND ARE THEREFORE SUBJECT TO ANY STATEMENT OF FACTS REVEALED BY EXAMINATION OF SUCH DOCUMENTS.

LEGEND

(D) DEED DIMENSION
(P) PLATED DIMENSION
(M) MEASURED DIMENSION

FLOOD ZONE DEFINITION

ZONE	EXPLANATION
"X"	AREAS DETERMINED TO BE OUTSIDE 500-YEAR FLOODPLAIN.

THE SUBJECT PROPERTY IS NOT LOCATED IN A SPECIAL FLOOD HAZARD AREA AS ESTABLISHED BY THE FEDERAL EMERGENCY MANAGEMENT AGENCY NATIONAL FLOOD INSURANCE PROGRAM AS PER SCALED INTERPRETATION OF FLOOD RATE MAP #180064 0003 A. AREA IN ZONE "X" MAP DATED 11-01-01

THE WITHIN PLAT AND SURVEY WAS PREPARED WITHOUT THE BENEFIT OF A CURRENT TITLE POLICY AND ARE THEREFORE SUBJECT TO ANY STATEMENT OF FACTS REVEALED BY EXAMINATION OF SCHEDULE "A" AND SCHEDULE "B" OF A TITLE POLICY.

THIS SURVEY PLAT HAS BEEN PREPARED FOR USE ON THIS PARTICULAR PROJECT AND FOR THE EXCLUSIVE USE OF THE PERSON(S) OR ENTITY HEREON NAMED AND IS NOT CERTIFIED TO OR TO BE USED BY ANY OTHER PARTY. THE EVIDENCE, POSSESSION, OWNERSHIP, CONDITIONS ETC. COULD CHANGE CONSTANTLY AND THE USE OF THIS SURVEY IS LIMITED ONLY TO THE DATE INDICATED HEREIN.

THE LOCATION OF THE TITLE LINES AND CORNERS ARE SUBJECT TO THE EVIDENCE FOUND IN THE PERFORMANCE OF THIS SURVEY. ADDITIONAL EVIDENCE PRESENTED TO MILLER SURVEYING, INC. MAY ALTER THE LOCATION OF THE TITLE LINES AND CORNERS.

GRAPHIC SCALE
0 50 100 200
SCALE : 1" = 100'

REVISIONS

REV. DATE	BY	DESCRIPTION

R.L.S. LS20400007 DATE:

MILLER SURVEYING INC.
948 CONNER STREET
NOBLESVILLE INDIANA 46060
PH. # (317) 773-2644 FAX 773-2694

LOCATION: PART OF THE NORTHEAST QUARTER, SECTION X, TXXN, RXE WHITE RIVER TWP., HAMILTON COUNTY, INDIANA	DRAWN BY: KNA	CHK'D BY: LDM
	SCALE: 1" = 100'	FIELD BOOK: 561
FIELD WORK COMPLETED: 12/10/09	DATE: 12/14/2009	PAGE: 70 & 102
CLIENT: CRA MATTHEW GROVES	JOB NUMBER	SURVEY 4 FILE:
DESCRIPTION: RETRACEMENT SURVEY	B32867	64 ATTICA

APPENDIX E

NPDES PERMIT NO. IN0063657

INDIANA DEPARTMENT OF ENVIRONMENTAL MANAGEMENT
We Protect Hoosiers and Our Environment.

Mitchell E. Daniels, Jr.
Governor

Thomas W. Easterly
Commissioner

100 North Senate Avenue
Indianapolis, Indiana 46204
(317) 232-8603
Toll Free (800) 451-6027
www.idem.IN.gov

VIA ELECTRONIC MAIL June 30, 2010

Mr. Joseph F. Riley, Jr.
Radio Materials Corporation
1050 East Summit Street
Attica, Indiana, 47918

Mr. Ken Wengert
Kraft Foods Global, Inc.
Three Lakes Drive
Northfield, IL 60093

Dear Gentlemen:

Re: NPDES Permit No. IN0063657
RMC Groundwater Remediation Project
1095 East Summit Drive
Attica, Indiana, Fountain County

Your application for a National Pollutant Discharge Elimination System (NPDES) permit for authorization to discharge into the waters of the State of Indiana has been processed in accordance with Section 402 and 405 of the Federal Water Pollution Control Act, as amended (33 U.S.C. 1251, et seq.), and IC 13-15, IDEM's permitting authority. All discharges from this facility shall be consistent with the terms and conditions of this permit.

One condition of your permit requires periodic reporting of several effluent parameters. These forms are available on the internet at the following web site:

http://www.in.gov/idem/5104.htm

Additionally, you will soon be receiving a supply of the computer generated preprinted federal NPDES DMR forms. Both the state and federal forms need to be completed and submitted on a routine basis. If you do not receive the preprinted DMR forms in a timely manner, please call this office at 317-232-8670.

Another condition which needs to be clearly understood concerns violation of the effluent limitations in the permit. Exceeding the limitations constitutes a violation of the permit and may subject the permittee to criminal or civil penalties. (See Part II A.2.) It is therefore urged that your office and treatment operator understand this part of the permit.

It should also be noted that any appeal must be filed under procedures outlined in IC 13-15-6, IC 4-21.5, and the enclosed Public Notice. The appeal must be initiated by filing a petition for administrative review with the Office of Environmental Adjudication (OEA) within eighteen (18) days of the mailing of this letter by filing at the following address:

Office of Environmental Adjudication
Indiana Government Center North
100 North Senate Avenue, Room 501
Indianapolis, IN 46204

Please send a copy of any written appeal to me at the IDEM, Office of Water Quality - Mail Code 65-42, 100 North Senate Avenue, Indianapolis, Indiana 46204-2251.

If you have any questions concerning the permit, please contact Mr. George Oliver at 317/232-8702. Questions concerning appeal procedures should be directed to the Office of Environmental Adjudication, at 317/232-8591.

Sincerely,

Paul Higginbotham, Chief
Permits Branch
Office of Water Quality

Enclosures
cc: Fountain County Health Department
Ms. Bhooma Sundar, Project Manager
RCRA Corrective Action, Region 5 US EPA (LU-9J)
Mr. Mike Sickels, IDEM OLQ
Mr. Steve Warner, Conestoga-Rovers & Assoc.

STATE OF INDIANA

DEPARTMENT OF ENVIRONMENTAL MANAGEMENT

AUTHORIZATION TO DISCHARGE UNDER THE

NATIONAL POLLUTANT DISCHARGE ELIMINATION SYSTEM

In compliance with the provisions of the Federal Water Pollution Control Act, as amended, (33 U.S.C. 1251 et seq., the "Act"), Title 13 of the Indiana Code, and regulations adopted by the Water Pollution Control Board, the Indiana Department of Environmental Management (IDEM) is issuing this permit to

RADIO MATERIALS CORP (RMC)
AND
KRAFT FOODS GLOBAL, INC.

GROUNDWATER REMEDIATION

is authorized to discharge from a groundwater remediation treatment system that is located at 1095 East Summit Street, Attica, Indiana, 47918 in Fountain County to receiving waters named Riley Lake (private) and unnamed tributary of the Wabash River in accordance with effluent limitations, monitoring requirements, and other conditions set forth in Parts I and II hereof. This permit may be revoked for the nonpayment of applicable fees in accordance with IC 13-18-20.

Effective Date: August 1, 2010

Expiration Date: July 30, 2015

In order to receive authorization to discharge beyond the date of expiration, the permittee shall submit such information and forms as are required by the Indiana Department of Environmental Management no later than 180 days prior to the date of expiration.

Signed on June 30, 2010 for the Indiana Department of Environmental Management.

Paul Higginbotham, Chief
Permits Branch
Office of Water Quality

TREATMENT FACILITY CLASSIFICATION

PART I

A. EFFLUENT LIMITATIONS AND MONITORING REQUIREMENTS

1. The permittee is authorized to discharge from the outfall listed below in accordance with the terms and conditions of this permit. The permit is authorized to discharge from Outfall 001. The discharge is limited to process wastewater. Samples taken in compliance with the monitoring requirements below shall be taken at a point representative of the discharge, after the wastewater treatment system but prior to entry into Riley Lake that is tributary to the Wabash River. Such discharge shall be limited and monitored by the permittee as specified below:

DISCHARGE LIMITATIONS[1][2]
Outfall 001

Table 1

	Quantity or Loading			Quality or Concentration			Monitoring	Requirements
	Monthly	Daily		Monthly	Daily		Measurement	Sample
Parameter	Average	Maximum	Units	Average	Maximum	Units	Frequency	Type
Flow[2]	Report	Report	MGD	------	------	----	Daily	24 Hour Total
Tetrachloroethene (PCE)	------		----	------	0.005	mg/l	Monthly [3]	Grab
Trichloroethene (TCE)	------		----	------	0.005	mg/l	Monthly [3]	Grab
cis-1,2-Dichloroethene	------		----	------	0.07	mg/l	Monthly [3]	Grab
Vinyl Chloride	------		----	------	0.002	mg/l	Monthly [3]	Grab

Table 2

	Quality or Concentration			Monitoring	Requirements
	Daily	Daily		Measurement	Sample
Parameter	Minimum	Maximum	Units	Frequency	Type
pH	6.0	9.0	s.u.	Monthly [3]	Grab

[1] See Part I.B. of the permit for the Narrative Water Quality Standards.

[2] Flow may be using engineering calculations such as pumping rates.

[3] Start Up Monitoring
The permittee shall conduct daily monitoring to begin immediately upon commencement of the discharge under this new permit. After compliance with three consecutive samples, monitoring may be reduced to monthly monitoring as identified in the table above.

B. NARRATIVE WATER QUALITY STANDARDS

At all times the discharge from any and all point sources specified within this permit shall not cause receiving waters:

1. including the mixing zone, to contain substances, materials, floating debris, oil, scum, or other pollutants:

   a. that will settle to form putrescent or otherwise objectionable deposits;

   b. that are in amounts sufficient to be unsightly or deleterious;

   c. that produce color, visible oil sheen, odor, or other conditions in such degree as to create a nuisance;

   d. which are in amounts sufficient to be acutely toxic to , or to otherwise severely injure or kill aquatic life, other animals, plants, or humans;

   e. which are in concentrations or combinations that will cause or contribute to the growth of aquatic plants or algae to such a degree as to create a nuisance, be unsightly, or otherwise impair the designated uses.

2. outside the mixing zone, to contain substances in concentrations which on the basis of available scientific data are believed to be sufficient to injure, be chronically toxic to, or be carcinogenic, mutagenic, or teratogenic to humans, animals, aquatic life, or plants.

C. MONITORING AND REPORTING

1. Representative Sampling

   Samples and measurements taken as required herein shall be representative of the volume and nature of the monitored discharge flow and shall be taken at times which reflect the full range and concentration of effluent parameters normally expected to be present. Samples shall not be taken at times to avoid showing elevated levels of any parameters.

2. Monthly Reporting

   The permittee shall submit monitoring reports to the Indiana Department of Environmental Management containing results obtained during the previous month and shall be postmarked no later than the 28th day of the

month following each completed monitoring period. The first report shall be submitted by the 28th day of the month following the month in which the permit becomes effective. These reports shall include, but not necessarily be limited to, the Discharge Monitoring Report (DMR) and the Monthly Report of Operation (MRO). All reports shall be mailed to IDEM, Office of Water Quality – Mail Code 65-42, Data & Information Services Section, 100 North Senate Ave., Indianapolis, Indiana 46204-2251. The Regional Administrator may request the permittee to submit monitoring reports to the Environmental Protection Agency if it is deemed necessary to assure compliance with the permit.

a. Calculations that require averaging of measurements of daily values (both concentrations and mass) shall use an arithmetic mean, except the monthly average for E. Coli shall be calculated as a geometric mean.

b. Daily effluent values (both mass and concentration) that are less than the LOQ that are used to determine the monthly average effluent level shall be accommodated in calculation of the average using statistical methods that have been approved by the Commissioner.

c. Effluent concentrations less than the LOD shall be reported on the Discharge Monitoring Report (DMR) forms as < (less than) the value of the LOD. For example, if a substance is not detected at a concentration of 0.1 µg/l, report the value as <0.1 µg/l.

d. Effluent concentrations greater than or equal to the LOD and less than the LOQ that are reported on a DMR shall be reported as the actual value and annotated on the DMR to indicate that the value is not quantifiable.

e. Mass discharge values which are calculated from concentrations reported as less than the value of the limit of detection shall be reported as less than the corresponding mass discharge value.

f. Mass discharge values that are calculated from effluent concentrations greater than the limit of detection shall be reported as the calculated value.

3. Definitions

a. "Monthly Average" means the total mass or flow-weighted concentration of all daily discharges during a calendar month on which daily discharges are sampled or measured, divided by the number of daily discharges sampled and/or measured during such calendar month.

The monthly average discharge limitation is the highest allowable average monthly discharge for any calendar month.

b. "Daily Discharge" means the total mass of a pollutant discharged during the calendar day or, in the case of a pollutant limited in terms other than mass pursuant to 327 IAC 5-2-11(e), the average concentration or other measurement of the pollutant specified over the calendar day or any twenty-four hour period that reasonably represents the calendar day for the purposes of sampling.

c. "Daily Maximum" means the maximum allowable daily discharge for any calendar day.

d. A "24-hour composite sample" means a sample consisting of at least 3 individual flow-proportioned samples of wastewater, taken by the grab sample method or by an automatic sampler, which are taken at approximately equally spaced time intervals for the duration of the discharge within a 24-hour period and which are combined prior to analysis. A flow-proportioned composite sample may be obtained by:

(1) recording the discharge flow rate at the time each individual sample is taken,

(2) adding together the discharge flow rates recorded from each individuals sampling time to formulate the "total flow" value,

(3) the discharge flow rate of each individual sampling time is divided by the total flow value to determine its percentage of the total flow value,

(4) then multiply the volume of the total composite sample by each individual sample's percentage to determine the volume of that individual sample which will be included in the total composite sample.

e. "Concentration" means the weight of any given material present in a unit volume of liquid. Unless otherwise indicated in this permit, concentration values shall be expressed in milligrams per liter (mg/l).

f. The "Regional Administrator" is defined as the Region V Administrator, U.S. EPA, located at 77 West Jackson Boulevard, Chicago, Illinois 60604.

g. The "Commissioner" is defined as the Commissioner of the Indiana Department of Environmental Management, which is located at the following address: 100 North Senate Avenue, Indianapolis, Indiana 46204.

h. "Limit of Detection" or "LOD" means the minimum concentration of a substance that can be measured and reported with ninety-nine percent (99%) confidence that the analyte concentration is greater than zero (0) for a particular analytical method and sample matrix.

i. "Limit of Quantitation" or "LOQ" means a measurement of the concentration of a contaminant obtained by using a specified laboratory procedure calibrated at a specified concentration above the method detection level. It is considered the lowest concentration at which a particular contaminant can be quantitatively measured using a specified laboratory procedure for monitoring of the contaminant. This term is also sometimes called limit quantification or quantification level.

j. "Method Detection Level" or "MDL" means the minimum concentration of an analyte (substance) that can be measured and reported with a ninety-nine percent (99%) confidence that the analyte concentration is greater than zero (0) as determined by procedure set forth in 40 CFR 136, Appendix B. The method detection level or MDL is equivalent to the LOD.

k. "Grab Sample" means a sample which is taken from a wastestream on a one-time basis without consideration of the flow rate of the wastestream and without considerations of time.

4. Test Procedure

The analytical and sampling methods used shall conform to the current version of 40 CFR 136. Multiple editions of Standard Methods for the Examination of Water and Wastewater are currently approved for most

methods, however, 40 CFR Part 136 should be checked to ascertain if a particular method is approved for a particular analyte. The approved methods may be included in the texts listed below. However, different but equivalent methods are allowable if they receive the prior written approval of the Commissioner and the U.S. Environmental Protection Agency.

a. Standard Methods for the Examination of Water and Wastewater 18th, 19th, or 20th Editions, 1992, 1995, or 1998, American Public Health Association, Washington, D.C. 20005.

b. A.S.T.M. Standards, Parts 23, Water; Atmosphere Analysis 1972 American Society for Testing and Materials, Philadelphia, PA 19103.

c. Methods for Chemical Analysis of Water and Wastes June 1974, Revised, March 1983, Environmental Protection Agency, Water Quality Office, Analytical Quality Control Laboratory, 1014 Broadway, Cincinnati, OH 45202.

5. Recording of Results

For each measurement or sample taken pursuant to the requirements of this permit, the permittee shall record and maintain records of all monitoring information and monitoring activities under this permit, including the following information:

a. The exact place, date, and time of sampling;

b. The person(s) who performed the sampling or measurements;

c. The dates the analyses were performed;

d The person(s) who performed the analyses;

e. The analytical techniques or methods used; and

f. The results of all required analyses and measurements.

6. Additional Monitoring by Permittee

If the permittee monitors any pollutant at the location(s) designated herein more frequently than required by this permit, using approved analytical methods as specified above, the results of this monitoring shall be included in the calculation and reporting of the values required in the monthly Discharge Monitoring Report (DMR). Such increased frequency shall also be indicated. Other monitoring data not specifically required in

this permit (such as internal process or internal waste stream data) which is collected by or for the permittee need not be submitted unless requested by the Commissioner.

7. Records Retention

All records and information resulting from the monitoring activities required by this permit, including all records of analyses performed and calibration and maintenance of instrumentation and recording from continuous monitoring instrumentation, shall be retained for a minimum of three (3) years. In cases where the original records are kept at another location, a copy of all such records shall be kept at the permitted facility. The three years shall be extended:

a. automatically during the course of any unresolved litigation regarding the discharge of pollutants by the permittee or regarding promulgated effluent guidelines applicable to the permittee; or

b. as requested by the Regional Administrator or the Indiana Department of Environmental Management.

D. REOPENING CLAUSES

This permit may be modified, or alternately, revoked and reissued, after public notice and opportunity for hearing:

1. to comply with any applicable effluent limitation or standard issued or approved under 301(b)(2)(C),(D) and (E), 304 (b)(2), and 307(a)(2) of the Clean Water Act, if the effluent limitation or standard so issued or approved:

a. contains different conditions or is otherwise more stringent than any effluent limitation in the permit; or

b. controls any pollutant not limited in the permit.

2. to incorporate any of the reopening clause provisions cited at 327 IAC 5-2-16.

PART II

STANDARD CONDITIONS FOR NPDES PERMITS

A. GENERAL CONDITIONS

1. Duty to Comply

The permittee shall comply with all terms and conditions of this permit in accordance with 327 IAC 5-2-8(1) and all other requirements of 327 IAC 5-2-8. Any permit noncompliance constitutes a violation of the Clean Water Act and IC 13 and is grounds for enforcement action or permit termination, revocation and reissuance, modification, or denial of a permit renewal application.

It shall not be a defense for a permittee in an enforcement action that it would have been necessary to halt or reduce the permitted activity in order to maintain compliance with the conditions of the permit.

2. Duty to Mitigate

In accordance with 327 IAC 5-2-8(3), the permittee shall take all reasonable steps to minimize or correct any adverse impact to the environment resulting from noncompliance with this permit. During periods of noncompliance, the permittee shall conduct such accelerated or additional monitoring for the affected parameters, as appropriate or as requested by IDEM, to determine the nature and impact of the noncompliance.

3. Duty to Reapply

If the permittee wishes to continue an activity regulated by this permit after the expiration date of this permit, the permittee must obtain and submit an application for renewal of this permit in accordance with 327 IAC 5-3-2(a)(2). It is the permittee's responsibility to obtain and submit the application. In accordance with 327 IAC 5-2-3(c), the owner of the facility or operation from which a discharge of pollutants occurs is responsible for applying for and obtaining the NPDES permit, except where the facility or operation is operated by a person other than an employee of the owner in which case it is the operator's responsibility to apply for and obtain the permit. The application must be submitted at least 180 days before the expiration date of this permit. This deadline may be extended if:

a. permission is requested in writing before such deadline;

b. IDEM grants permission to submit the application after the deadline; and

c. the application is received no later than the permit expiration date.

4. Permit Transfers

In accordance with 327 IAC 5-2-8(4)(D), this permit is nontransferable to any person except in accordance with 327 IAC 5-2-6(c). This permit may be transferred to another person by the permittee, without modification or revocation and reissuance being required under 327 IAC 5-2-16(c)(1) or 16(e)(4), if the following occurs:

a. the current permittee notified the Commissioner at least thirty (30) days in advance of the proposed transfer date.

b. a written agreement containing a specific date of transfer of permit responsibility and coverage between the current permittee and the transferee (including acknowledgment that the existing permittee is liable for violations up to that date, and the transferee is liable for violations from that date on) is submitted to the Commissioner.

c. the transferee certifies in writing to the Commissioner their intent to operate the facility without making such material and substantial alterations or additions to the facility as would significantly change the nature or quantities of pollutants discharged and thus constitute cause for permit modification under 327 IAC 5-2-16(d). However, the Commissioner may allow a temporary transfer of the permit without permit modification for good cause, e.g., to enable the transferee to purge and empty the facility's treatment system prior to making alterations, despite the transferee's intent to make such material and substantial alterations or additions to the facility.

d. the Commissioner, within thirty (30) days, does not notify the current permittee and the transferee of the intent to modify, revoke and reissue, or terminate the permit and to require that a new application be filed rather than agreeing to the transfer of the permit.

The Commissioner may require modification or revocation and reissuance of the permit to identify the new permittee and incorporate such other requirements as may be necessary under the Clean Water Act or state law.

5. Permit Actions

In accordance with 327 IAC 5-2-16(b) and 327 IAC 5-2-8(4), this permit may be modified, revoked and reissued, or terminated for cause, including, but not limited to, the following:

a. Violation of any terms or conditions of this permit;

b. Failure of the permittee to disclose fully all relevant facts or misrepresentation of any relevant facts in the application, or during the permit issuance process; or

c. A change in any condition that requires either a temporary or a permanent reduction or elimination of any discharge controlled by the permit, e.g., plant closure, termination of discharge by connection to a POTW, a change in state law that requires the reduction or elimination of the discharge, or information indicating that the permitted discharge poses a substantial threat to human health or welfare.

Filing of either of the following items does not stay or suspend any permit condition: (1) a request by the permittee for a permit modification, revocation and reissuance, or termination, or (2) submittal of information specified in Part II.A.3 of the permit including planned changes or anticipated noncompliance.

The permittee shall submit any information that the permittee knows or has reason to believe would constitute cause for modification or revocation and reissuance of the permit at the earliest time such information becomes available, such as plans for physical alterations or additions to the permitted facility that:

1. could significantly change the nature of, or increase the quantity of pollutants discharged; or

2. the commissioner may request to evaluate whether such cause exists.

In accordance with 327 IAC 5-1-3(a)(5), the permittee must also provide any information reasonably requested by the Commissioner.

6. Property Rights

Pursuant to 327 IAC 5-2-8(6) and 327 IAC 5-2-5(b), the issuance of this permit does not convey any property rights of any sort or any exclusive privileges, nor does it authorize any injury to persons or private property or an invasion of rights, any infringement of federal, state, or local laws or regulations. The issuance of the permit also does not preempt any duty to obtain any other state, or local assent required by law for the discharge or for the construction or operation of the facility from which a discharge is made.

7. Severability

In accordance with 327 IAC 1-1-3, the provisions of this permit are severable and, if any provision of this permit or the application of any provision of this permit to any person or circumstance is held invalid, the invalidity shall not affect any other provisions or applications of the permit which can be given effect without the invalid provision or application.

8. Oil and Hazardous Substance Liability

Nothing in this permit shall be construed to relieve the permittee from any responsibilities, liabilities, or penalties to which the permittee is or may be subject to under Section 311 of the Clean Water Act.

9. State Laws

Nothing in this permit shall be construed to preclude the institution of any legal action or relieve the permittee from any responsibilities, liabilities, or penalties established pursuant to any applicable state law or regulation under authority preserved by Section 510 of the Clean Water Act or state law.

10. Penalties for Violation of Permit Conditions

Pursuant to IC 13-30-4, a person who violates any provision of this permit, the water pollution control laws; environmental management laws; or a rule or standard adopted by the Water Pollution Control Board is liable for a civil penalty not to exceed twenty-five thousand dollars ($25,000) per day of any violation. Pursuant to IC 13-30-5, a person who obstructs, delays, resists, prevents, or interferes with (1) the department; or (2) the department's personnel or designated agent in the performance of an inspection or investigation commits a class C infraction.

Pursuant to IC 13-30-10, a person who intentionally, knowingly, or recklessly violates any provision of this permit, the water pollution control laws or a rule or standard adopted by the Water Pollution Control Board commits a class D felony punishable by the term of imprisonment established under IC 35-50-2-7(a) (up to one year), and/or by a fine of not less than five thousand dollars ($5,000) and not more than fifty thousand dollars ($50,000) per day of violation. A person convicted for a violation committed after a first conviction of such person under this provision is subject to a fine of not more than one hundred thousand dollars ($100,000) per day of violation, or by imprisonment for not more than two (2) years, or both.

11. Penalties for Tampering or Falsification

In accordance with 327 IAC 5-2-8(9), the permittee shall comply with monitoring, recording, and reporting requirements of this permit. The Clean Water Act, as well as IC 13-30-10, provides that any person who falsifies, tampers with, or knowingly renders inaccurate any monitoring device or method required to be maintained under a permit shall, upon conviction, be punished by a fine of not more than ten thousand dollars ($10,000) per violation, or by imprisonment for not more than one hundred eighty (180) days per violation, or by both.

12. Toxic Pollutants

If any applicable effluent standard or prohibition (including any schedule of compliance specified in such effluent standard or prohibition) is established under Section 307(a) of the Clean Water Act for a toxic pollutant injurious to human health, and that standard or prohibition is more stringent than any limitation for such pollutant in this permit, this permit shall be modified or revoked and reissued to conform to the toxic effluent standard or prohibition in accordance with 327 IAC 5-2-8(5). Effluent standards or prohibitions established under Section 307(a) of the Clean Water Act for toxic pollutants injurious to human health are effective and must be complied with, if applicable to the permittee, within the time provided in the implementing regulations, even absent permit modification.

13. Wastewater treatment plant and certified operators

The permittee shall have the wastewater treatment facilities under the responsible charge of an operator certified by the Commissioner in a classification corresponding to the classification of the wastewater treatment plant as required by IC 13-18-11-11 and 327 IAC 5-22. In order to operate a wastewater treatment plant the operator shall have qualifications as established in 327 IAC 5-22-7.

327 IAC 5-22-10(b) provides that a certified operator may be designated as being in responsible charge of more than one (1) wastewater treatment plant, if it can be shown that he will give adequate supervision to all units involved. Adequate supervision means that sufficient time is spent at the plant on a regular basis to assure that the certified operator is knowledgeable of the actual operations and that test reports and results are representative of the actual operations conditions. In accordance with 327 IAC 5-22-3(10), "responsible charge" means the person responsible for the overall daily operation, supervision, or management of a wastewater facility.

Pursuant to 327 IAC 5-22-10(a), the permittee shall notify IDEM when there is a change of the person serving as the certified operator in responsible charge of the wastewater treatment facility. The notification shall be made no later than thirty (30) days after a change in the operator.

14. Construction Permit

In accordance with IC 13-14-8-11.6, a discharger is not required to obtain a state permit for the modification or construction of a water pollution treatment or control facility if the discharger has an effective NPDES permit.

If the discharger modifies their existing water pollution treatment or control facility or constructs a new water pollution treatment or control facility for the treatment or control of any new influent pollutant or increased levels of any

existing pollutant, then, within thirty (30) days after commencement of operation, the discharger shall file with the Department of Environment Management a notice of installation for the additional pollutant control equipment and a design summary of any modifications.

The notice and design summary shall be sent to the Office of Water Quality - Mail Code 65-42, Industrial NPDES Permits Section, 100 North Senate Avenue, Indianapolis, IN 46204-2251.

15. Inspection and Entry

In accordance with 327 IAC 5-2-8(7), the permittee shall allow the Commissioner, or an authorized representative, (including an authorized contractor acting as a representative of the Commissioner) upon the presentation of credentials and other documents as may be required by law, to:

a. Enter upon the permittee's premises where a point source, regulated facility, or activity is located or conducted, or where records must be kept pursuant to the conditions of this permit;

b. Have access to and copy, at reasonable times, any records that must be kept under the terms and conditions of this permit;

c. Inspect at reasonable times any facilities, equipment or methods (including monitoring and control equipment), practices, or operations regulated or required pursuant to this permit; and

d.. Sample or monitor at reasonable times, any discharge of pollutants or internal wastestreams for the purposes of evaluating compliance with the permit or as otherwise authorized.

16. Industrial NPDES Permit Fees

Pursuant to IC 13-18-20, each facility is required to pay annual fees. NPDES annual fees begin accruing January 1 of each year. The department shall assess the fees not later than January 15 of that year.

The permittee is responsible for payment of annual fees for this facility. The annual base fees for major and minor permits, as well as annual discharge flow fees can be found at IC 13-18-20 for the following permits:

Industrial permits, IC 13-18-20-2; coal mine permits, IC 13-18-20-3; stone quarry permits, IC 13-18-20-4; public water system permits, IC 13-18-20-9; or Industrial waste pretreatment permits, 13-18-20-11.

Pursuant to IC 13-18-20-12, when a person files an application with the department concerning a NPDES permit, including applications for initial permits, permit renewals, permit modifications, or permit variances, the person must remit an application fee of fifty dollars ($50) to the department. If a person does not remit an application fee to the department, the department shall deny the person's application.

In accordance with IC 13-18-20-14, in addition to the penalties described under IC 13-30-4-1, IC 13-30-4-2, and IC 13-30-5-1; if a person does not remit an annual NPDES fee or an installment established by the department under IC 13-16-2 to the department not more than sixty (60) days after the date the fee is assessed or not more than thirty (30) days after the date the installment is due, the person shall be assessed a delinquency charge equal to ten percent (10%) of the annual fee or ten percent (10%) of the installment, whichever is applicable. A delinquency charge, if applicable, is due and payable sixty (60) days after the date an annual NPDES fee is assessed or thirty (30) days after the date the installment is due.

Pursuant to IC 13-18-20-15, if a person does not remit an annual NPDES fee or an installment established by the department under IC 13-16-2 and any applicable delinquency charge to the department not more than ninety (90) days after the date the fee is assessed or not more than sixty (60) days after the date the installment is due, the department may revoke the person's NPDES permit. However, before the department may revoke the permit (not earlier than sixty (60) days after the date the annual NPDES fee is assessed or not earlier than thirty (30) days after the installment is due; and not later than thirty (30) days before the department revokes the permit) the department must deliver a written notice to the person that describes what fees and delinquency charges are due and indicates that the department may revoke the person's permit for nonpayment after thirty (30) days.

B. MANAGEMENT REQUIREMENTS

1. Proper Operation and Maintenance

The permittee shall at all times maintain in good working order and efficiently operate all facilities and systems (and related appurtenances) for the collection and treatment which are installed or used by the permittee and which are necessary for achieving compliance with the terms and conditions of this permit in accordance with 327 IAC 5-2-8(8).

Neither 327 IAC 5-2-8(8), nor this provision, shall be construed to required the operation of installed treatment facilities that are unnecessary for achieving compliance with the terms and conditions of the permit.

2. Bypass of Treatment Facilities

Pursuant to 327 IAC 5-2-8(11):

a. Terms as defined in 327 IAC 5-2-8(11)(A):

(1) "Bypass" means the intentional diversion of a waste stream from any portion of a treatment facility.

(2) "Severe property damage" means substantial physical damage to property, damage to the treatment facilities which would cause them to become inoperable, or substantial and permanent loss of natural resources which can reasonably be expected to occur in the absence of a bypass. Severe property damage does not mean economic loss caused by delays in production.

b. The permittee may allow a bypass to occur that does not cause a violation of the effluent limitations in the permit, but only if it is also for essential maintenance to assure efficient operation. These bypasses are not subject to the provisions of Part II.B.2.c., e, and f of this permit.

c. Bypasses, as defined in (a) above, are prohibited, and the Commissioner may take enforcement action against a permittee for bypass, unless the following occur:

(1) The bypass was unavoidable to prevent loss of life, personal injury, or severe property damage, as defined above;

(2) There were no feasible alternatives to the bypass, such as the use of auxiliary treatment facilities, retention of untreated wastes, or maintenance during normal periods of equipment downtime. This condition is not satisfied if adequate back-up equipment should have been installed in the exercise of reasonable engineering judgment to prevent a bypass that occurred during normal periods of equipment downtime or preventive maintenance; and

(3) The permittee submitted notices as required under Part II.B.2.e; or

(4) The condition under Part II.B.2.b above is met.

d. Bypasses that result in death or acute injury or illness to animals or humans must be reported in accordance with the "Spill Response and Reporting Requirements" in 327 IAC 2-6.1, including calling 888/233-7745 as soon as possible, but within two (2) hours of discovery.

e. The permittee must provide the Commissioner with the following notice:

(1) If the permittee knows or should have known in advance of the need for a bypass (anticipated bypass), it shall submit prior written notice. If possible, such notice shall be provided at least ten (10) days before the date of the bypass for approval by the Commissioner.

(2) The permittee shall orally report an unanticipated bypass that exceeds any effluent limitations in the permit within 24 hours of becoming aware of the bypass noncompliance. The permittee must also provide a written report within five (5) days of the time the permittee becomes aware of the bypass event. The written report must contain a description of the noncompliance and its cause; the period of noncompliance, including exact dates and times; if the cause of noncompliance has not been corrected, the anticipated time it is expected to continue; and steps taken or planned to reduce, eliminate and prevent recurrence of the bypass event.

f. The Commissioner may approve an anticipated bypass, after considering its adverse effects, if the Commissioner determines that it will meet the conditions listed above in Part II.B.2.c. The Commissioner may impose any conditions determined to be necessary to minimize any adverse effects.

3. Upset Conditions

Pursuant to 327 IAC 5-2-8(12):

a. "Upset" means an exceptional incident in which there is unintentional and temporary noncompliance with technology-based permit effluent limitations because of factors beyond the reasonable control of the permittee. An upset does not include noncompliance to the extent caused by operational error, improperly designed treatment facilities, inadequate treatment facilities, lack of preventive maintenance, or careless or improper operation.

b. An upset shall constitute an affirmative defense to an action brought for noncompliance with such technology-based permit effluent limitations if the requirements of Paragraph c of this section, are met.

c. A permittee who wishes to establish the affirmative defense of upset shall demonstrate, through properly signed, contemporaneous operating logs or other relevant evidence, that:

(1) An upset occurred and the permittee has identified the specific cause(s) of the upset, if possible;

(2) The permitted facility was at the time being operated in compliance with proper operation and maintenance procedures;

(3) The permittee complied with any remedial measures required under Part II.A.3; and

(4) The permittee submitted notice of the upset as required in the "Twenty-Four Hour Reporting Requirements," Part II.C.3, or 327 IAC 2-6.1, whichever is applicable.

4. Removed Substances

Solids, sludges, filter backwash, or other pollutants removed from or resulting from treatment or control of wastewaters shall be disposed of in a manner such as to prevent any pollutant from such materials from entering waters of the State and to be in compliance with all Indiana statutes and regulations relative to liquid and/or solid waste disposal.

C. REPORTING REQUIREMENTS

1. Planned Changes in Facility or Discharge

Pursuant to 327 IAC 5-2-8(10)(F), the permittee shall give notice to the Commissioner as soon as possible of any planned physical alterations or additions to the facility. In this context, permit facility refers to a point source discharge, not a wastewater treatment facility. Notice is required only when either of the following applies:

a. The alteration or addition may meet one of the criteria for determining whether the facility is a new source as outlined in 327 IAC 5-1.5.

b. The alteration or addition could significantly change the nature of, or increase the quantity of, pollutants discharge. This notification applies to pollutants that are subject either to effluent limitations in Part I.A. or to notification requirements in Part II.C.9. of this permit.

Following such notice, the permit may be modified to revise existing pollutant limitations and/or to specify and limit any pollutants not previously limited.

2. Monitoring Reports

Pursuant to 327 IAC 5-2-8(9) and 327 IAC 5-2-13 through 15, monitoring results shall be reported at the intervals and in the form specified in "Monitoring Reports", Part I.C.2.

3. Twenty-Four Hour Reporting Requirements

Pursuant to 327 IAC 5-2-8(10)(C), the permittee shall orally report to the Commissioner information on the following types of noncompliance within 24 hours from the time permittee becomes aware of such noncompliance. If the noncompliance meets the requirements of item b (Part II.C.3.b) or 327 IAC 2-6.1, then the report shall be made within those prescribed time frames.

a. Any unanticipated bypass which exceeds any effluent limitation in the permit;

b. Any noncompliance which may pose a significant danger to human health or the environment. Reports under this item shall be made as soon as the permittee becomes aware of the noncomplying circumstances;

c. Any upset (as defined in Part II.B.3 above) that exceeds any effluent limitation in the permit;

d. Violation of a maximum daily discharge limitation for any of the following toxic pollutants:

The permittee can make the oral reports by calling (317)232-8670 during regular business hours or by calling (317) 233-7745 ((888)233-7745 toll free in Indiana) during non-business hours. A written submission shall also be provided within 5 days of the time the permittee becomes aware of the circumstances. The written submission shall contain a description of the noncompliance and its cause; the period of noncompliance, including exact dates and times, and, if the noncompliance has not been corrected,

the anticipated time it is expected to continue; and steps taken or planned to reduce and eliminate the noncompliance and prevent its recurrence. The Commissioner may waive the written report on a case-by-case basis if the oral report has been received within 24 hours. Alternatively the permittee may submit a "Bypass Fax Report" or a "Noncompliance Notification Report", whichever is appropriate, to IDEM at (317) 232-8637. If a complete fax submittal is sent within 24 hours of the time that the permittee became aware of the occurrence, then the fax report will satisfy both the oral and written reporting requirements.

4. Other Noncompliance

Pursuant to 327 IAC 5-2-8(10)(D), the permittee shall report any instance of noncompliance not reported under the "Twenty-Four Hour Reporting Requirements" in Part II.C.3, or any compliance schedules at the time the pertinent Discharge Monitoring Report is submitted. The report shall contain the information specified in the compliance schedule.

5. Other Information

Pursuant to 327 IAC 5-2-8(10)(E), where the permittee becomes aware of a failure to submit any relevant facts or submitted incorrect information in a permit application or in any report, the permittee shall promptly submit such facts or corrected information to the Commissioner.

6. Signatory Requirements

Pursuant to 327 IAC 5-2-22 and 327 IAC 5-2-8(14):

a. All reports required by the permit and other information requested by the Commissioner shall be signed and certified by a person described below or by a duly authorized representative of that person:

(1) For a corporation: by a responsible corporate officer defined as a president, secretary, treasurer, any vice-president of the corporation in charge of a principal business function, or any other person who performs similar policymaking or decision making functions for the corporation or the manager of one or more manufacturing, production or operating facilities employing more than two hundred fifty (250) persons or having the gross annual sales or expenditures exceeding twenty-five million dollars ($25,000,000) (in second quarter 1980 dollars), if authority to sign documents has been assigned or delegated to the manager in accordance with corporate procedures.

(2) For a partnership or sole proprietorship: by a general partner or the proprietor, respectively; or

(3) For a Federal, State, or local government body or any agency or political subdivision thereof: by either a principal executive officer or ranking elected official.

b. A person is duly authorized representative only if:

(1) The authorization is made in writing by a person described above.

(2) The authorization specifies either an individual or a position having responsibility for the overall operation of the regulated facility or activity, such as the position of plant manager, operator of a well or a well field, superintendent, or a position of equivalent responsibility. (A duly authorized representative may thus be either a named individual or any individual occupying a named position.); and

(3) The authorization is submitted to the Commissioner.

c. Certification. Any person signing a document identified under Part II.C.6. shall make the following certification:

"I certify under penalty of law that this document and all attachments were prepared under my direction or supervision in accordance with a system designed to assure that qualified personnel properly gather and evaluate the information submitted. Based on my inquiry of the person or persons who manage the system, or those persons directly responsible for gathering the information, the information submitted is, to the best of my knowledge and belief, true, accurate, and complete. I am aware that there are significant penalties for submitting false information, including the possibility of fine and imprisonment for knowing violations."

7. Availability of Reports

Except for data determined to be confidential under 327 IAC 12.1, all reports prepared in accordance with the terms of this permit shall be available for public inspection at the offices of the Indiana Department of Environmental Management and the Regional Administrator. As required by the Clean Water Act, permit applications, permits, and effluent data shall not be considered confidential.

8. Penalties for Falsification of Reports

IC 13-30 and 327 IAC 5-2-8(14) provides that any person who knowingly makes any false statement, representation, or certification in any record or other document submitted or required to be maintained under this permit, including monitoring reports or reports of compliance, shall, upon conviction, be punished by a fine of not more than $10,000 per violation, or by imprisonment for not more than 180 days per violation, or by both.

9. Changes in Discharge of Toxic Substances

Pursuant to 327 IAC 5-2-9, the permittee shall notify the Commissioner as soon as it knows or has reason to believe:

a. That any activity has occurred or will occur which would result in the discharge of any pollutant identified as toxic, pursuant to Section 307(a) of the Clean Water Act which is not limited in the permit, if that discharge will exceed the highest of the following "notification levels."

(1) One hundred micrograms per liter (100µg/l);

(2) Two hundred micrograms per liter (200 µg/l) for acrolein and acrylonitrile; five hundred micrograms per liter (500µg/l) for 2,4-dinitrophenol and 2-methyl-4,6-dinitophenol; and one milligram per liter (1mg/l) for antimony;

(3) Five (5) times the maximum concentration value reported for that pollutant in the permit application in accordance with 40 CFR 122.21(g)(7); or

(4) A notification level established by the Commissioner on a case-by-case basis, either at his own initiative or upon a petition by the permittee. This notification level may exceed the level specified in subdivisions (1), (2), or (3) but may not exceed the level which can be achieved by the technology-based treatment requirements applicable to the permittee under the CWA (see 327 IAC 5-5-2).

b. That it has begun or expects to begin to use or manufacture, as an intermediate or final product or byproduct, any toxic pollutant which was not reported in the permit application under 40 CFR 122.21(g)(9).

National Pollutant Discharge Elimination System

Briefing Memo for
RADIO MATERIALS CORP. (RMC)
&
KRAFT FOODS GLOBAL, Inc.
Groundwater Remediation
April 2010

Indiana Department of Environmental Management

100 North Senate Avenue
Indianapolis, Indiana 46204
(317) 232-8603

Permittee:	Mr. Joseph F. Riley, Jr. (and) Mr. Ken Wengert Radio Materials Corp (RMC) Kraft Foods Global, Inc. 1050 E. Summit Street Three Lakes Drive Attica, Indiana 47918 Northfield, IL 60093
Permit Information: **Permit Expiration Date**	**Permit Number: IN0063657**
Source Contact:	Mr. Steven Wanner Conestoga--Rover & Assc. 6520 Copporate Drive Indianapolis, IN 46278 317-291-7007
Source Location:	Radio Materials Corp. (RMC) 1095 East Summit Street Attica, Indiana 47918 Fountain County
Receiving Stream:	Riley Lake that is tributary to Ravine Park and the Wabash River
Proposed Action:	New Permit: Date Application Received: March 8, 2010
Source Category	NPDES Minor – Industrial
Permit Writer:	George Oliver, Environmental Manager 317-232-8702 goliver@idem.in.gov

1.0 Introduction

The Indiana Department of Environmental Management (IDEM) received a National Pollutant Discharge Elimination System (NPDES) Permit application from Conestoga-Rover Associates on behalf of Radio Materials Corporation and Kraft Foods Global, Inc. for a new NPDES permit to be issued to both parties as the owner and operator as co-permittees. A five year permit is proposed in accordance with 327 IAC 5-2-6(a).

The Federal Water Pollution Control Act of 1972 and subsequent amendments require a NPDES permit for the discharge of wastewater to surface waters. Furthermore, Indiana Statute 13-15-1-2 requires a permit to control or limit the discharge of any contaminants into state waters or into a publicly owned treatment works. This proposed permit action by IDEM complies with both federal and state requirements.

In accordance with Title 40 of the Code of Federal Regulations (CFR) Sections 124.7 and 124.6, as well is Indiana Administrative Code (IAC) 327 Section 5, development of a Statement of Basis, or Briefing Memo, is required for NPDES permits. This document fulfills the requirements established in those regulations.

This Briefing Memo was prepared in order to document the factors considered in the development of NPDES Permit effluent limitations. The technical basis for the Briefing Memo may consist of evaluations of promulgated effluent guidelines, existing effluent quality, receiving water conditions, and wasteload allocations to meet Indiana Water Quality Standards. Decisions to award variances to Water Quality Standards or promulgated effluent guidelines are justified in the Briefing Memo where necessary.

2.0 Facility description

2.1 General

A groundwater remediation project has been undertaken at the Radio Materials Corporation (RMC) property located at 1095 E. Summit Street Attica Indiana, Fountain County. RMC manufactured television tubes, ceramic capacitors and other electrical components. Chlorinated solvents from the manufacturing activity have been identified in the groundwater and are the subject of remediation activities. The U.S. EPA Region 5 entered into a Resource Conservation and Recovery Act (RCRA) Consent Order for remediation of various areas of the RMC property.

A site map with the outfall location is appended as Attachment I
A process flow diagram is appended as Attachment II

2.2 Outfall Locations

Outfall 001	Latitude	40°	17'	37"
	Longitude	87°	14'	14"

2.3 Wastewater Treatment

Recovery wells will be used to collect groundwater at the site. The contaminated groundwater will be treated by air stripping. The maximum design flow rate is 130 gallons per minute (gpm) / 0.187 million gallons per day (mgd). The average pump rate is expected to be 100 gpm / 0.144 mgd.

Chlorinated solvents were used in the manufacturing process and the following compounds have been identified in the groundwater: Tetrachloroethene (also known as perchloroethylene, Perc, PCE), Trichloroethene (TCE), cis-1,2-Dichloroethene (cDCE), and Vinyl Chloride.

The permittee shall have the wastewater treatment facilities under the responsible charge of an operator certified by the Commissioner in a classification corresponding to the classification of the wastewater treatment plant as required by IC 13-18-11-11 and 327 IAC 5-22-5. In order to operate a wastewater treatment plant the operator shall have qualifications as established in 327 IAC 5-22-7. The IDEM Compliance Section has given the permittee a Class C industrial wastewater treatment plant classification.

3.0 Receiving Water

The receiving stream for Outfall 001 is a 1.8-acre private pond named Riley Lake that is tributary to Ravine Park and the Wabash River. The Q7,10 low flow value is zero cfs and shall be capable of supporting a well balanced warm water aquatic community and full body contact recreation in accordance with 327 IAC 2-1-3.

4.0 Permit limitations

4.1 General

Two categories of effluent limitations exist for NPDES permits: 1) Technology based effluent limits, and 2) Water quality based effluent limits.

Technology based effluent limits are developed by applying the national effluent limitation guidelines (ELGs) established by EPA for specific industrial categories. Technology based effluent limits were established to require a minimum level of treatment for industrial or municipal sources using available technology. In the absence of federally promulgated guidelines effluent limits can also be based upon BP. Technology based limits are the primary mechanism of control and enforcement of water pollution under the CWA. Technology based treatment requirements under section 301(b) of the CWA represent the minimum level of control that must be imposed in a section 402 permit [40 CFR 125.3(a)]. Accordingly, every individual member of a discharge class or category is required to operate their water pollution control technologies according to industry-wide standards and accepted engineering practices. This means that technology-based effluent limits based upon a BPJ determination are applied at end-of-pipe and mixing zones are not allowed [40 CFR 125.3(a)]. Similarly, since the statutory deadlines for BPT, BAT and BCT have all passed, compliance schedules are also not allowed.

Water quality based effluent limits are designed to be protective of the beneficial uses of the receiving water and are independent of the available treatment technology. In addition, when performing a permit renewal, there are existing permit limits. These may be technology-based limits, water quality-based limits, or limits based on best professional judgment. When renewing a permit, the most stringent of technology based or water quality based limits apply.

According to 40 CFR 122.44 and 327 IAC 5, NPDES permit limits are based on either technology-based limitations, where applicable, best professional judgment (BPJ), or Indiana Water Quality-Based Effluent Limitations (WQBEL's), whichever is most stringent. The decision to limit or monitor the parameters contained in this permit is based on information contained in the permittee's NPDES application.

The water quality-based effluent limitations for this facility are based on water quality criteria in 327 IAC 2-1-6 or under the procedures described in 327 IAC 2-1-8.2 through 327 IAC 2-1-8.6 and implementation procedures in 327 IAC 5. Limitations and/or monitoring are required for parameters identified by applications of the reasonable potential to exceed WQBEL under 327 IAC 5-2-11.1 (h)(1).

Narrative Water Quality Based Limits
The narrative water quality contained under 327 IAC 2-1-6(a)(1) (A)-(E) have been included in this permit to ensure that the narrative water quality criteria are met.

Numeric Water Quality Based Limits
The numeric water quality criteria and values contained in this permit have been calculated using the tables of water quality criteria under 327 IAC 2-1-6(b) & (c).

4.2 Technology-Based Effluent Limits

BPJ/BAT
IDEM has established technology-based effluent limitations in the proposed permit utilizing Best Professional Judgment (BPJ) to meet the requirements of Best Conventional Technology and Best Available Technology Economically Achievable (BCT/BAT). The intent of a technology-based effluent limitation is to require a minimum level of treatment for industrial point sources based on currently available treatment technologies. Where EPA has not yet developed guidelines for a particular industry, permit limitations may be established using Best Professional Judgment (BPJ) [40 CFR 122.43, 122.44, 125.3, and 402(a)(1)].

EPA has been developing ELGs for existing industrial and commercial activities since 1972 as directed in the original Federal Water Pollution Control Act (40 CFR 403 through 471 inclusive). However, ELGs have not yet been developed for groundwater remediation dischargers or substantially similar activities. Therefore, and as provided in Section 402(a)(1) of the Act, IDEM is establishing technology-based effluent limits in this individual NPDES permit utilizing BPJ to meet the requirements of BCT/BAT.

In general, the technology-based effluent limitations for contaminated groundwater sources are sufficient to meet the most conservative water quality standards, which are typically human health-based standards. The available information indicates that with few exceptions, properly designed and operated treatment units which typically include air stripping and/or activated carbon, can achieve effluent concentrations at laboratory reportable values (often referred to as "non-detection" in reports).

Based upon the BPJ/BAT for equalization holding tank and air stripping, the following effluent limitations will be included in the permit;

Chlorinated Solvent	Limitation mg/l
Tetrachloroethene (PCE)	0.005
Trichloroethene (TCE)	0.005
cis-1,2-Dichloroethene (cDCE)	0.07
Vinyl Chloride	0.002

4.3 Water Quality-Based Effluent Limits

The water quality-based effluent limits were calculated using the criteria contained in Table 1 of 327 IAC 2-1-6, Minimum Surface Water Quality Standards, and the procedure contained in 327 IAC 5-2-11.1, Establishment of Water Quality-Based Effluent Limitations for Dischargers not discharging to Waters within the Great Lakes System.

Flow

The permittee's flow is to be monitored in accordance with 327 IAC 5-2-13(a)2.

pH

Discharges to waters of the state are limited to the range of 6.0-9.0 s.u., in accordance with 327 IAC 2-1-6.

5.0 Permit Draft Discussion

5.1 Discharge Limitations

Outfall 001

Parameter	Monthly Average	Daily Maximum	Units
Flow	Report	N/A	MGD
Tetrachloroethene		0.005	mg/l
Trichloroethene		0.005	mg/l
cis-1,2-Dichloroethene		0.07	mg/l
Vinyl Chloride		0.002	mg/l

Parameter	Daily Minimum	Daily Maximum	Units
pH	6.0	9.0	Std Units

5.2 Monitoring Conditions and Rationale

Start Up Monitoring – The permittee shall conduct daily monitoring immediately after treatment systems start up begins. After three (3) consecutive daily samples that are in compliance, monitoring may be reduced to monthly monitoring as identified in the Table below. Monthly monitoring is consistent with other groundwater remediation permit utilizing air stripping and activated carbon treatment technology.

MONITORING CONDITIONS

Outfall 001

Parameter	Minimum Frequency	Type of Sample
Flow[1]	Daily	24-Hour Total
Tetrachloroethene	Monthly[2]	Grab
Trichloroethene	Monthly[2]	Grab
cis-1,2-Dichloroethene	Monthly[2]	Grab
Vinyl Chloride	Monthly[2]	Grab
pH	Monthly[2]	Grab

[1] Flow may be determined using pumping rate calculations.
[2] Daily monitoring is required immediately after treatment start up. After three (3) consecutive samples that are in compliance, monitoring may be reduced to monthly monitoring

Compliance monitoring (Outfall 001) shall be immediately following wastewater treatment system and prior to discharge to Riley Lake.

5.3 Spill Response and Reporting Requirement

Reporting requirements associated with the Spill Reporting, Containment, and Response requirements of 327 IAC 2-6.1 are included in Part II.B.2.c. and Part II.C.3. of the NPDES permit. Spills from the permitted facility meeting the definition of a spill under 327 IAC 2-6.1-4(15), the applicability requirements of 327 IAC 2-6.1-1, and the Reportable Spills requirements of 327 IAC 2-6.1-5 (other than those meeting an exclusion under 327 IAC 2-6.1-3 or the criteria outlined below) are subject to the Reporting Responsibilities of 327 IAC 2-6.1-7.

It should be noted that the reporting requirements of 327 IAC 2-6.1 do not apply to those discharges or exceedances that are under the jurisdiction of an applicable permit when the substance in question is covered by the permit and death or acute injury or illness to animals or humans does not occur. In order for a discharge or exceedance to be under the jurisdiction of this NPDES permit, the substance in question (a) must have been discharged in the normal course of operation from an outfall listed in this permit, and (b) must have been discharged from an outfall for which the permittee has authorization to discharge that substance.

5.4 Antidegradation

It has been demonstrated historically that groundwater remediation cleanups of Volatile Organic Compounds (VOCs) such as chlorinated solvents and petroleum products can be effectively treated with the use of a combination the following treatment processes consisting of flow equalization, initial filtration, oil water separators, air stripping and activated carbon filtration. This is a mature treatment technology that has been used as a demonstration of Best Available Treatment (BAT) and also as a demonstration of the most cost-effective treatment methods for these compounds involving groundwater remediation projects. Effluent limitations in this permit are based upon the Best Available Treatment (BAT) technology for VOCs, such as chlorinated solvents, and/or petroleum products, such as gasoline and diesel fuel contaminated groundwater. Therefore no antidegradation demonstration is required for the issuance of this permit.

6.0 Permit processing/public comment

Pursuant to IC 13-15-5-1, IDEM will publish a general notice in the newspaper with the largest general circulation within the above county. A 30-day comment period is available in order to solicit input from interested parties, including the general public. Comments concerning the draft permit should be submitted in accordance with the procedure outlined in the enclosed public notice form.

The final decision described in the Notice of Decision may be administratively appealed. Filing an appeal is formally known as filing a "Petition for Administrative Review" to request an "administrative hearing."

If you object to the decision issued by the Indiana Department of Environmental Management (IDEM) and are: 1) the person to whom the decision was directed, 2) a party specified by law as being eligible to appeal, or 3) aggrieved or adversely affected by the decision, you are entitled to file an appeal. (An aggrieved or adversely affected person is one who would be considered by the court to be negatively impacted by the decision. If you file an appeal because you feel that you are aggrieved, it will be up to you to demonstrate in your appeal how you are directly impacted in a negative way by the decision).

The Indiana Office of Environmental Adjudication (OEA) was established by state law – see Indiana Code (IC) 4-21.5-7 – and is a separate state agency independent of IDEM. The jurisdiction of the OEA is limited to the review of environmental pollution concerns or any alleged technical or legal deficiencies associated with the IDEM decision making process. Once your request has been received by OEA, your appeal may be considered by an Environmental Law Judge.

What is required of persons filing an appeal?

Filing an appeal is a legal proceeding, so it is suggested that you consult with an attorney. Your request for an appeal must include your name and address and identify your interest in the decision (Or, if you are representing someone else, his or her name and address and their interest in the decision). In addition, please include a photocopy of the accompanying Notice of Decision or list the permit number and name of the applicant, or responsible party, in your letter.

Before a hearing is granted, you must identify the reason for the appeal request and the issues proposed for consideration at the hearing. You also must identify the permit terms and conditions that, in your judgment, would appropriately satisfy the requirements of law with respect to the IDEM decision being appealed. That is, you must suggest an alternative to the language in the permit (or other order, or decision) being appealed, and your suggested changes must be

consistent with all applicable laws (See Indiana Code 13-15-6-2) and rules (See Title 315 of the Indiana Administrative Code, or 315 IAC).

The effective date of this agency action is stated on the accompanying Notice of Decision (or other IDEM decision notice). If you file a "Petition for Administrative Review" (appeal), you may wish to specifically request that the action be "stayed" (temporarily halted) because most appeals do not allow for an automatic "stay." If, after an evidentiary hearing, a "stay" is granted, the IDEM-approved action may be halted altogether, or only allowed to continue in part, until a final decision has been made regarding the appeal. However, if the action is not "stayed" the IDEM-approved activity will be allowed to continue during the appeal process.

Where can you file an appeal?

If you wish to file an appeal, you must do so in writing. There are no standard forms to fill out and submit, so you must state your case in a letter (called a petition for administrative review) to the Indiana Office of Environmental Adjudication (OEA). Do not send the original copy of your appeal request to IDEM. Instead, send or deliver your letter to:

The Indiana Office of Environmental Adjudication
IGC-North Building- Room 1049
100 North Senate Avenue
Indianapolis, IN 46204

If you file an appeal, also please send a copy of your appeal letter to the IDEM contact person identified in the Notice of Decision, and to the applicant (person receiving an IDEM permit, or other approval).

Your appeal (petition for administrative review) must be received by the Office of Environmental Adjudication in a timely manner. The due date for filing an appeal may be given, or the method for calculating it explained, on the accompanying Notice of Decision (NOD). Generally appeals must be filed within 18 days of the mailing date of the NOD. To ensure that you meet this filing requirement, your appeal request must be:

1) Delivered in person to the OEA by the close-of-business on the eighteenth day (If the 18th day falls on a day when the Office of Environmental Adjudication (OEA) is closed for the weekend or for a state holiday, then your petition will be accepted on the next business day on which OEA is open.), or
2) Given to a private carrier who will deliver it to the OEA on your behalf, (and from whom you must obtain a receipt dated on or before the 18th day), or
3) For those appeal requests sent by U.S. Mail, your letter must be postmarked by no later than midnight of the 18th day, or Faxed to the OEA at 317/233-9372
4) before the close-of-business of the 18th day, provided that the original signed "Petition for Administrative Review" is also sent, or delivered, to the OEA in a timely manner.

What are the costs associated with filing an appeal?

The OEA does not charge a fee for filing documents for an administrative review or for the use of its hearing facilities. However, OEA does charge a fifteen cent ($.15) per page fee for copies of any documents you may request. Another cost that could be associated with your appeal would be for attorney's fees. Although you have the option to act as your own attorney, the administrative review and associated hearing are complex legal proceedings; therefore, you should consider whether your interests would be better represented by an experienced attorney.

What can you expect from the Office of Environmental Adjudication (OEA) after you file for an appeal?

The OEA will provide you with notice of any prehearing conferences, preliminary hearings, hearings, "stays," or orders disposing of the review of this decision. In addition, you may contact the OEA by phone at 317/233-0850 with any scheduling questions. However, technical questions should be directed to the IDEM contact person listed on the Notice of Decision.

Do not expect to discuss details of your case with the OEA other than in a formal setting such as a prehearing conference, a formal hearing, or a settlement conference. The OEA is not allowed to discuss a case without all sides being present. All parties to the proceeding are expected to appear at the initial prehearing conference.

Attachment I

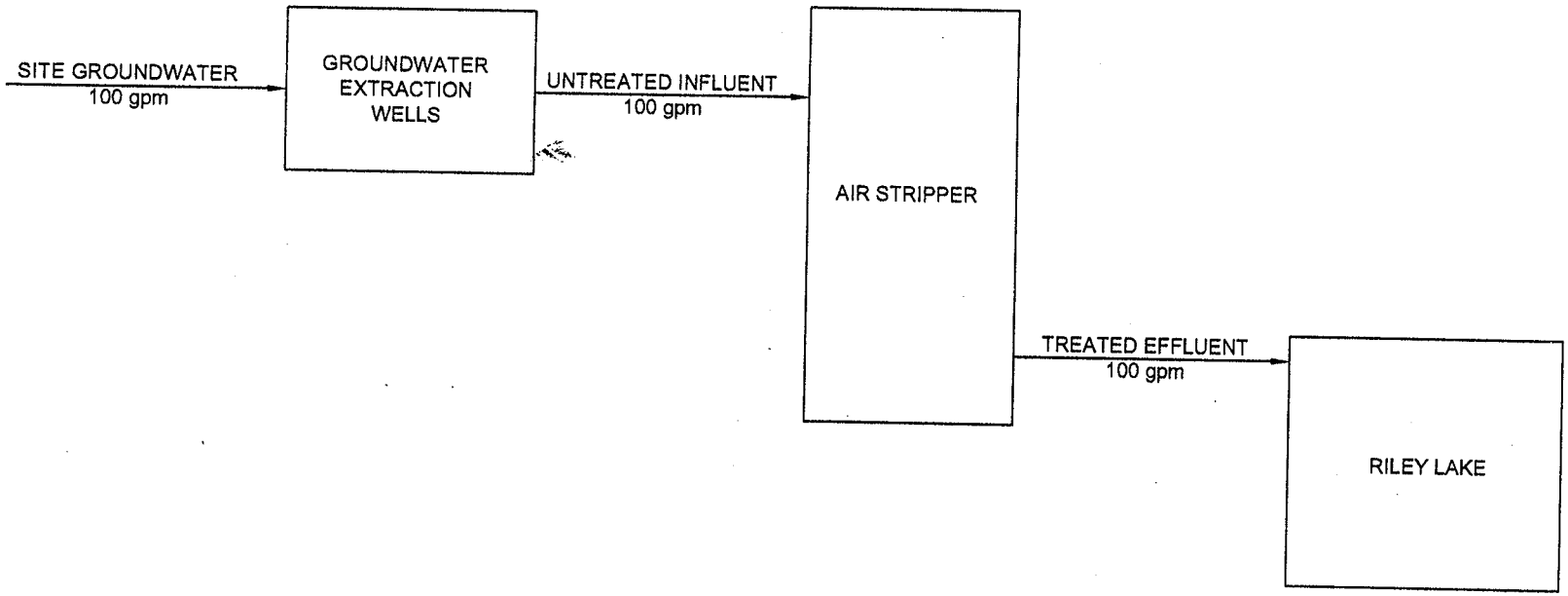

NOTES:
1. ALL FLOW RATES ARE AVERAGES.
2. gpm - GALLONS PER MINUTE.

figure 2

SCHEMATIC OF WATER FLOW
RADIO MATERIALS CORPORATION
Attica, Indiana

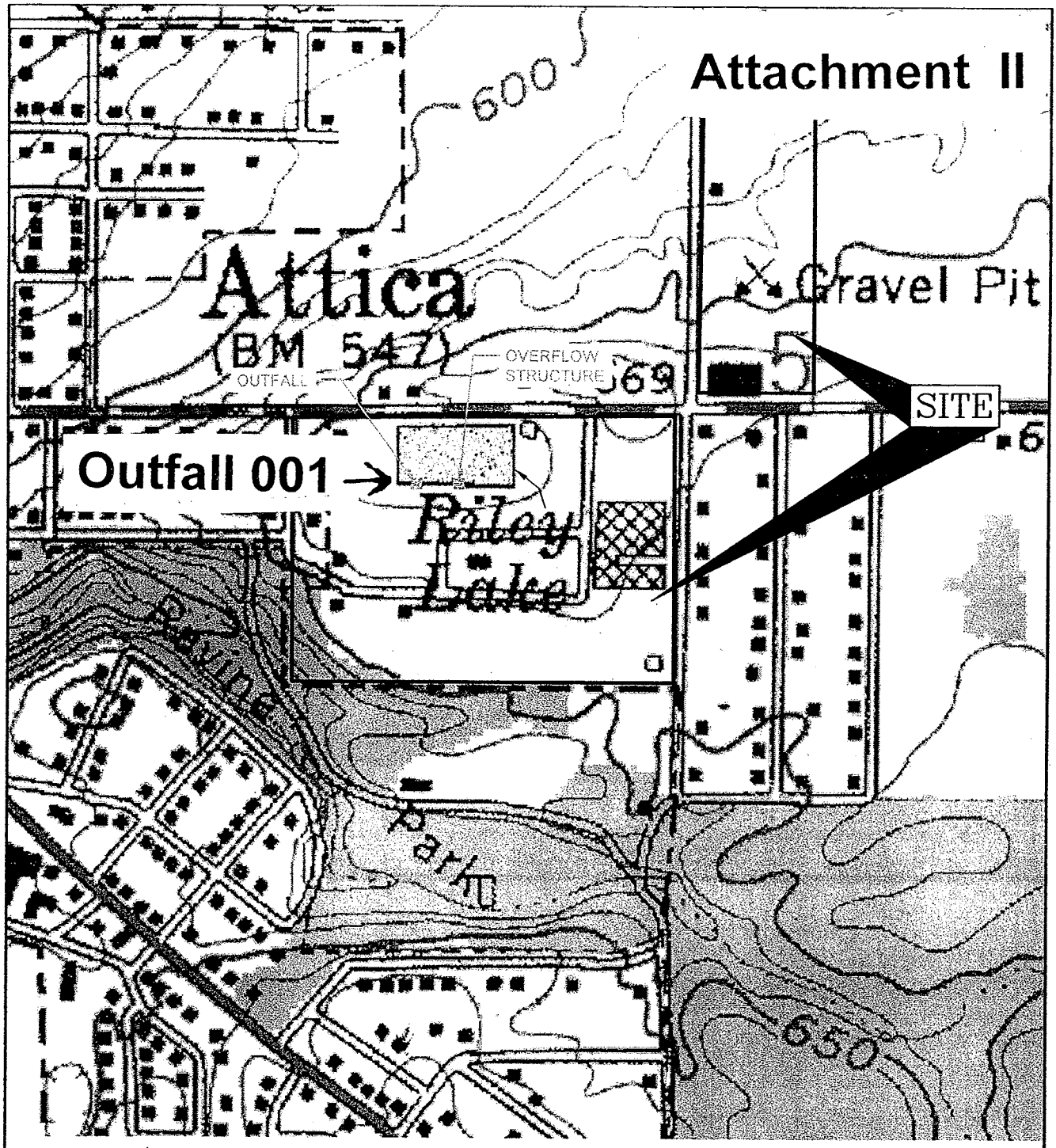

figure 3

SITE MAP
RADIO MATERIALS CORPORATION
Attica, Indiana

19190-10(IDEM001)GN-WA001 MAR 25/2010

STATE OF INDIANA
DEPARTMENT OF ENVIRONMENTAL MANAGEMENT

PUBLIC NOTICE NO. 2010 – 61 – F

DATE OF NOTICE: JUNE 30, 2010

The Office of Water Quality issues the following NPDES FINAL PERMIT.

MINOR - NEW

RADIO MATERIALS CORP (RMC), Permit No. IN0063657, FOUNTAIN COUNTY, 1095 E Summit St, Attica, IN. This industrial facility will discharge 0.187 million gallons per day of ground water remediation into Riley Lake through an unnamed tributary to the Wabash River. Permit Writer: George Oliver at 317/232-8702, goliver@idem.in.gov.

APPEAL PROCEDURES FOR FINAL PERMITS

The Final Permits are available for review & copies at IDEM, Indiana Government Center, North Bldg, 100 N Senate Ave, Indianapolis, IN, Rm 1203, Office of Water Quality/NPDES Permit Section, from 9 – 4, M - F (copies 10¢ per page). Each Final Permit is available at the respective, local County Health Department. **Please tell others you think would be interested in this matter.** Regarding your rights and responsibilities pertaining to the Public Notice process and timeframes, please refer to IDEM websites: http://www.in.gov/idem/5474.htm and IDEM Permit Guide (Public Participation): http://www.in.gov/idem/4172.htm. **To view the Citizen Guide go to:** http://www.in.gov/idem/5803.htm.

Appeal Procedure: Any person affected by the issuance of the Final Permit may appeal by filing a Petition for Administrative Review with the Office of Environmental Adjudication **within** eighteen (18) days of the date of this Public Notice. Any appeal request must be filed in accordance with IC 4-21.5-3-7 and must include facts demonstrating that the party requesting appeal is the applicant; a person aggrieved or adversely affected or is otherwise entitled to review by law.
Timely filing: The Petition for Administrative Review must be received by the Office of Environmental Adjudication (OEA) **within** 18 days of the date of this Public Notice; either by U.S. Mail postmark or by private carrier with dated receipt. This Petition for Administrative Review represents a request for an Adjudicatory Hearing, therefore must:

- state the name and address of the person making the request;
- identify the interest of the person making the request;
- identify any persons represented by the person making the request;
- state specifically the reasons for the request;
- state specifically the issues proposed for consideration at the hearing;
- identify the Final Permit Rule terms and conditions which, in the judgment of the person making the request, would be appropriate to satisfy the requirements of the law governing this NPDES Permit rule.

If the person filing the Petition for Administrative Review desires any part of the NPDES Final Permit Rule to be stayed pending the outcome of the appeal, a Petition for Stay must be included in the appeal request, identifying those parts to be stayed. Both Petitions shall be mailed or delivered to the address here:
Phone: 317/232-8591.

Environmental Law Judge
Office of Environmental Adjudication
IGC – North Building- Rm 501
100 N. Senate Avenue
Indianapolis IN 46204

Stay Time frame: If the Petition (s) is filed **within** eighteen (18) days of the mailing of this Public Notice, the effective date of any part of the permit, within the scope of the Petition for Stay is suspended for fifteen (15) days. The Permit will become effective again upon expiration of the fifteen (15) days, unless or until an Environmental Law Judge stays the permit action in whole or in part.

Hearing Notification: Pursuant to Indiana Code, when a written request is submitted, the OEA will provide the petitioner or any person wanting notification, with the Notice of pre-hearing conferences, preliminary hearings, hearing stays or orders disposing of the Petition for Administrative Review. Petition for Administrative Review must be filed in compliance with the procedures and time frames outlined above. Procedural or scheduling questions should be directed to the OEA at the phone listed above.

APPENDIX F

OPERATION AND MAINTENANCE PLAN
GROUNDWATER EXTRACTION AND TREATMENT SYSTEM

TABLE OF CONTENTS

Page

F.1.0 INTRODUCTION 1

F.2.0 PROJECT DESCRIPTION 2
F.2.1 EXTRACTION WELLS AND HEADER 2
F.2.2 EQUALIZATION TANK 2
F.2.3 AIR STRIPPER 2

F.3.0 CONTROL SYSTEMS 3
F.3.1 PROCESS CONTROL THEORY 3
F.3.2 CONTROL COMPONENTS 3
F.3.2.1 PROGRAMMABLE LOGIC CONTROLLER (PLC) 3
F.3.2.2 SCADA COMPUTER SYSTEM 4
F.3.2.3 AUTODIALER 4
F.3.3 ALARMS 4
F.3.4 REMOTE ACCESS 4

F.4.0 OPERATION AND MAINTENANCE PROGRAM 6
F.4.1 INTRODUCTION AND BASIS 6

F.5.0 MONITORING 9
F.5.1 ROUTINE OPERATIONS MONITORING 9
F.5.1.1 MONTHLY MONITORING 9
F.5.1.1.1 SUMP PUMP 9
F.5.1.1.2 PROCESS VESSELS, PIPING, PUMPS, AND TANKS 10
F.5.1.1.3 SUBMERSIBLE WELL PUMPS AND CONTROLS 10
F.5.1.1.4 AIR STRIPPER 10
F.5.1.2 SEMI-ANNUAL, INSPECTION, MONITORING, AND MAINTENANCE 11
F.5.1.3 ANNUAL, INSPECTION, MONITORING, AND MAINTENANCE 11

F.6.0 REPORTING 12
F.6.1 INSPECTION AND MAINTENANCE LOGS 12

F.7.0 PERSONNEL 13
F.7.1 STAFFING REQUIREMENTS 13
F.7.2 RESPONSIBILITIES 13

F.8.0 RECORDS 14
F.8.1 OPERATING INSPECTION 14
F.8.2 MAINTENANCE/CALIBRATION 14

TABLE OF CONTENTS

Page

F.9.0 REFERENCES 15
F.9.1 RADIO MATERIALS SITE DOCUMENTS 15
F.9.1.1 CONSENT ORDERS/RECORD OF DECISION 15
F.9.1.2 MANUALS 15
F.9.1.3 HEALTH AND SAFETY 15
F.9.1.4 QUALITY ASSURANCE 15
F.9.2 DRAWINGS 15
F.9.3 EQUIPMENT VENDOR MANUALS 16

LIST OF APPENDICES

APPENDIX F-1 MAINTENANCE LOG

F.1.0 INTRODUCTION

This O&M Plan outlines operation and maintenance requirements for the Groundwater Treatment System at the Radio Materials Site in Attica, Indiana (Site).

The O&M Plan is organized as follows:

1. Section 1.0 presents the purpose and organization of the report
2. Section 2.0 provides a description of the project
3. Section 3.0 provides a description of the control systems
4. Section 4.0 presents the system operations
5. Section 5.0 describes monitoring
6. Section 6.0 presents the reporting plan
7. Section 7.0 describes the personnel
8. Section 8.0 describes the records
9. Section 9.0 provides references

The O&M Plan will be updated following construction of the system, and the revised plan will include manufacturer-supplied manuals for the equipment installed.

F.2.0 PROJECT DESCRIPTION

The treatment system design consists of groundwater extraction and air stripping.

F.2.1 EXTRACTION WELLS AND HEADER

A total of 16 groundwater extraction wells will pump water to the treatment system. The extraction wells are divided into the north and south groupings. The north group consists of extraction wells EW-01, BEW-01, EW-02, EW-03, EW-04, EW-05, and EW-06. The south group consists of extraction wells EW-07, EW-08, EW-09, EW-10, EW-11, EW-12, EW-13, EW-14, and EW-15. Each extraction well will be individually piped to the treatment system using 2-inch diameter high density polyethylene (HDPE) pipe with heat welded joints. The individual lines will tie into a header inside the treatment building.

F.2.2 EQUALIZATION TANK

The equalization tank is a 5,500 gallon HDPE tank which receives water from the extraction wells. Instrumentation includes a level transmitter and a high level switch.

F.2.3 AIR STRIPPER

VOC contaminants in the groundwater will be removed by means of an air stripper. The selected air stripper will be a low profile, induced draft, sieve tray air stripper. The design flow rate of the stripper between 6 and 425 gallons per minute (gpm) with a maximum air flow rate of 1,800 standard cubic feet per minute (scfm). Airflow to the air stripper will be supplied by a regenerative blower. Other equipment to be provided includes all necessary switches, gauges, system controls, alarms, main disconnect, etc., to operate and maintain the system. The treatment equipment will be housed in a heated, weatherproof building, which will protect the equipment and reduce noise levels. Off-gas treatment is not required. Treated water will be discharged to Riley Lake.

F.3.0 CONTROL SYSTEMS

The groundwater treatment system is designed to operate continuously, 24 hours per day. Controls for the system will primarily consist of the following:

- Water level sensors will be installed in the groundwater extraction wells for use in monitoring and controlling water level within the well
- Water level sensors and switches will be installed in the equalization tank to control the feed pump and shut down the wells in the event that the tank water level exceeds the high level switch
- Water level sensors and switches will be installed in the sump of the air stripper to shut down the extraction well pumps and blower in the event that the sump water level rises above a predetermined level
- A low flow sensor will shut down the system in the event of low airflow through the stripper
- A high water level switch will be installed in the building sump. The switch will shut down the system in the event of a high water level detected in the sump
- Alarms and a telemetry system will also be provided to alert maintenance personnel of system failures

F.3.1 PROCESS CONTROL THEORY

The groundwater treatment system will use a programmable logic controller (PLC) for system controls.

F.3.2 CONTROL COMPONENTS

F.3.2.1 PROGRAMMABLE LOGIC CONTROLLER (PLC)

A PLC is used as the primary control device. The system PLC receives a series of digital inputs and analog inputs, interprets them based on a written program, and then sends a series of digital and analog outputs to control pumps, valves, and a variety of other equipment. The system PLC program is designed to operate the treatment system in a fail-safe manner. The system PLC also serves to trigger alarms for the process. The PLC will be connected to a personal computer (PC) based Supervisory Control and Data Acquisition (SCADA) system which allows the operator to view operational parameters and trends, change operational set points, and view and acknowledge alarms.

F.3.2.2 SCADA COMPUTER SYSTEM

The system PLC is tied in to a SCADA software package that allows the operator to view the groundwater treatment system process from a computer screen. This system offers flexibility in process control and allows the operator efficient management of the treatment processes. Alarms that are triggered by the PLC are displayed on the screen display.

In addition, the operator can trend process parameters over the history of stored data. The interface allows the operator to change pertinent operational set points and to start/stop extraction system and treatment system components from the control room.

The operator is provided with all critical process information through the PLC/SCADA interface. The SCADA system also provides reporting and management of operational parameters and alarms.

F.3.2.3 AUTODIALER

The system will be equipped with an autodialer. The autodialer is programmed to dial out and summon the on-call operator in the event of a Treatment System Alarm. In the event of a power failure the autodialer has a battery backup, thus allowing dialing and operator notification. In the event of a shutdown that initiates the autodialer, operator intervention is required to restart the impacted portions of the Treatment System.

F.3.3 ALARMS

Alarms are set to advise the operator when conditions are not within the normal limits. The alarms are triggered through the PLC and, if the alarm is critical, communicated via the autodialer to the on-call operator.

F.3.4 REMOTE ACCESS

The operator may dial up the PC located in the control room via a telephone line. This connection allows the operator to view operational parameters and trends, change operational set points, and view and acknowledge alarms. Therefore, the operator will

have access to view and operate the treatment system in the same manner as if the operator was in the control room.

F.4.0 OPERATION AND MAINTENANCE PROGRAM

F.4.1 INTRODUCTION AND BASIS

A successful O&M program for the Site is dependent on frequent and thorough inspections of the Site and the early identification and correction of problems. The intent of the regular inspections is to identify and remediate problems as soon as possible.

The final O&M Plan will be written and revised to appropriately address the completed extraction, forcemain, treatment, and discharge system. The plan will be revised as necessary after completion of construction of the groundwater treatment system. The goal of the O&M program is to maximize system operation and minimize system downtime.

An operations and maintenance program appropriate for this system would include regular site inspections, a scheduled maintenance program, spare equipment and materials inventory, and a maintenance contractor familiarized with the system.

Inventory

An inventory of spare parts and materials will be kept at the Site. The parts and materials in inventory will typically be:

- Not locally warehoused
- Not readily available
- Vital to system operation
- Commonly used in maintenance and repair procedures
- Have a sufficient shelf life as to be placed in inventory

A typical inventory may be composed of pumps, submersible motors, fuses, valves, valve rebuild kits, flow meters, electrical tape, relays, solenoid valves, breakers, gasket material, and tools.

The makeup of the inventory will be revised based on system needs.

Downtime

The major causes of downtime include the following: system maintenance, scheduled repairs, unplanned mechanical failures, and power outages.

Scheduled Maintenance

Scheduled maintenance is the scheduled or periodic maintenance of a piece of equipment. The data gathered through a maintenance program are invaluable in determining the frequency of future maintenance and inspections. The volume of maintenance performed is often a balance of increased downtime due to the additional amount of maintenance performed versus the marginal increase in operating time from a reduction in mechanical failures. The O&M program is often revised throughout the life of the system to reflect its needs.

Scheduled Repairs

There are two types of scheduled repairs. One type of scheduled repair is for repair when the near-term failure of a piece of mechanical equipment is apparent. This is typically identified in the course of a periodic inspection or maintenance procedure and is the most common type of repair.

The other type of scheduled maintenance is that based on mechanical operating history of the piece of equipment (mean time to failure). Often, the conditions under which the piece of equipment operates dictates the operating life of the component and, as such, an operating history must be developed before this type of repair is effective.

Mechanical and Electrical Failures

These failures may occur without prior warning or give warning but occur before repairs can be made. Failures of this type include clogged valve pilots, motor failures, tripped breakers, and electrical failures. An automatic telephone dialing system will be connected to the system control panel. The auto dialer will immediately sense most failures and call the maintenance contractor and technical staff.

Electrical Service Failures

Power outages are infrequent and usually short lived. Electric utilities have an excellent record of timely repairs to service interruptions. The automatic telephone dialing system will call to report such a failure.

Emergency Shutdown

This process is designed to automatically shut down in a safe manner in the event of an electrical utility failure. In the event of a power failure all process equipment will shut down. In the event of a power failure the autodialer (battery backup provided) will summon the on-call operator.

F.5.0 MONITORING

The operator is responsible for day-to-day operations of the facility including system monitoring, record keeping, and ensuring that potential problems are attended to with necessary maintenance. Maintenance of system components will be performed in accordance with the manufacturer's recommendations and standard industrial practice.

F.5.1 ROUTINE OPERATIONS MONITORING

The operator is responsible for day-to-day operations of the facility including system routine, preventive, and required maintenance. These maintenance and monitoring procedures are designed to maintain compliance with substantive requirements and to maintain efficient system operation. Maintenance of the treatment system components will be performed in accordance with the manufacturer's recommendations and standard industrial practice.

F.5.1.1 MONTHLY MONITORING

Monitoring and an inspection of system operation will be made on a monthly basis. This inspection will include:

- Perform a visual check; walk through the entire treatment building check for leaks, overflows, malfunctioning equipment, or signs of vandalism. Document visual check and findings in logbook
- Perform a visual check of the treated water outfall
- Complete the treatment system inspection log

The inspection will verify the operation of each component of the system as discussed below.

F.5.1.1.1 SUMP PUMP

A monthly inspection of the sump pump located in the treatment building will be performed to verify proper operation. This inspection will include:

- Manual trip of the sump high-high switch to verify proper shutdowns

- Verify operation of pump and discharge lines

F.5.1.1.2 PROCESS VESSELS, PIPING, PUMPS, AND TANKS

A monthly inspection of the equalization tank and filter feed pump located in the treatment building will be performed to verify proper operation. This inspection will include:

- Cleaning (if necessary)
- Inspect for leaks, corrosion or cracks
- Verify proper operation of feed pump, level control switches, and flow meter including pump cycles, flow rates, pumping duration, and motor amperage
- Verify operation of sequestering agent metering pump

F.5.1.1.3 SUBMERSIBLE WELL PUMPS AND CONTROLS

A monthly inspection of submersible pumps and controls for the groundwater extraction system will include:

- Verify proper operation of pumps, flow meters, and indicators
- Monitor pump cycles and flow rates

F.5.1.1.4 AIR STRIPPER

A monthly inspection of the air stripper, blower, and controls will include:

- Verify proper operation of air stripper, blower, and controls
- Visually inspect air and water flow through air stripper tray viewing ports
- Monitor air pressure, flow rate, and temperature
- Visually observe air stripper stack for visible discharge
- Monitor blower cycles, operation duration, and motor amperage

F.5.1.2 SEMI-ANNUAL, INSPECTION, MONITORING, AND MAINTENANCE

Semi-annual monitoring, inspection, and maintenance will include:

- Change alarm batteries and test alarm operation
- Lubricate motors and change oil
- Inspect HVAC components for proper operation
- Inspect water flow meters for fouling

F.5.1.3 ANNUAL, INSPECTION, MONITORING, AND MAINTENANCE

Annual monitoring, inspection, and maintenance will include:

- Inspect building components, including paint, coatings, and roof
- Inspect electrical connections for corrosion and verify tightness
- Calibrate flow meters

F.6.0 REPORTING

F.6.1 INSPECTION AND MAINTENANCE LOGS

The operator will be responsible for maintaining the system inspection and maintenance logs at the Site. An example maintenance log is included in Appendix F-1. The maintenance log is used to document work/repairs to the system.

Inspection logs and check lists will be included in the updated O&M Plan following construction of the system. Inspection items will include:

- Volume of water removed from each extraction well
- Water level in each well or piezometer
- Other miscellaneous system information

F.7.0 PERSONNEL

The contact information for the treatment system operating personnel is posted in the treatment building.

F.7.1 STAFFING REQUIREMENTS

The system is designed to operate unattended with the exception of routine inspections, maintenance activities, and response to alarms by the on-call operator.

F.7.2 RESPONSIBILITIES

The treatment system operator is responsible for the following:

- Ensuring O&M procedures and manuals are readily available
- Properly operating and maintaining the system
- Scheduling routine inspections and preventive maintenance
- Maintaining a record keeping system
- Ensuring appropriate health and safety procedures are followed
- Conducting system inspections and maintenance
- Maintaining an inspection log book
- Ensuring compliance with all regulatory requirements

F.8.0 RECORDS

F.8.1 OPERATING INSPECTION

Operations inspection sheets will be filed in the treatment building. Operations logbooks are used to record activities performed while on Site. Active logbooks will be stored in the treatment building.

F.8.2 MAINTENANCE/CALIBRATION

Maintenance and calibration records for each piece of equipment will be filed in the treatment building.

F.9.0 REFERENCES

F.9.1 RADIO MATERIALS SITE DOCUMENTS

F.9.1.1 CONSENT ORDERS/RECORD OF DECISION

- Record of Decision
- Consent Decree
- Statement of Work
- Explanation of Significant Differences

F.9.1.2 MANUALS

The Operation and Maintenance Plan will be stored in the treatment building and be kept in the project file at CRA's Indianapolis, Indiana office.

F.9.1.3 HEALTH AND SAFETY

The Site-Specific Health and Safety Plan will be stored in the treatment building and be kept in the project file at CRA's Indianapolis, Indiana office.

F.9.1.4 QUALITY ASSURANCE

The Phase I Remedial Action Quality Assurance Project Plan will be stored in the treatment building and be kept in the project file at CRA's Indianapolis, Indiana office.

F.9.2 DRAWINGS

As-built system drawings will be stored in the treatment building and be kept in the project file at CRA's Indianapolis, Indiana office.

F.9.3 EQUIPMENT VENDOR MANUALS

Manuals for individual equipment will be stored in the treatment building and be kept in the project file at CRA's Indianapolis, Indiana office.

APPENDIX F-1

MAINTENANCE LOG

TABLE F-1

MAINTENANCE LOG
RADIO MATERIALS CORPORATION
ATTICA, INDIANA

Maintenance Task Performed	*Task Performed By*	*Date Started*	*Date Finished*	*Work Inspected By*	*Comments*

APPENDIX G

O&M MANUAL AIR SPARGE/SOIL VAPOR EXTRACTION SYSTEM

TABLE OF CONTENTS

Page

G.1.0 INTRODUCTION 1
G.1.1 PURPOSE AND ORGANIZATION OF REPORT 1

G.2.0 PROJECT DESCRIPTION 2
G.2.1 INTERCEPTOR TRENCHES 2
G.2.2 MOISTURE SEPARATORS AND TRANSFER PUMP 2
G.2.3 AIR SPARGE BLOWERS 3
G.2.4 SVE BLOWERS 3

G.3.0 CONTROL SYSTEMS 4
G.3.1 PROCESS CONTROL THEORY 4
G.3.2 CONTROL COMPONENTS 4
G.3.2.1 PROGRAMMABLE LOGIC CONTROLLER (PLC) 4
G.3.2.2 SCADA COMPUTER SYSTEM 5
G.3.2.3 AUTODIALER 5
G.3.3 ALARMS 5
G.3.4 REMOTE ACCESS 5

G.4.0 OPERATION AND MAINTENANCE PROGRAM 6
G.4.1 INTRODUCTION AND BASIS 6

G.5.0 MONITORING 9
G.5.1 ROUTINE OPERATIONS MONITORING 9
G.5.1.1 MONTHLY MONITORING 9
G.5.1.1.1 MOISTURE SEPARATORS 9
G.5.1.1.2 TRANSFER PUMP 10
G.5.1.1.3 BLOWERS 10
G.5.1.2 SEMI-ANNUAL, INSPECTION, MONITORING, AND MAINTENANCE 10
G.5.1.3 ANNUAL, INSPECTION, MONITORING, AND MAINTENANCE 11

G.6.0 REPORTING 12
G.6.1 INSPECTION AND MAINTENANCE LOGS 12

G.7.0 PERSONNEL 13
G.7.1 STAFFING REQUIREMENTS 13
G.7.2 RESPONSIBILITIES 13

G.8.0 RECORDS 14
G.8.1 OPERATING INSPECTION 14
G.8.2 MAINTENANCE/CALIBRATION 14

TABLE OF CONTENTS

Page

G.9.0 REFERENCES 15
G.9.1 RADIO MATERIALS SITE DOCUMENTS 15
G.9.1.1 CONSENT ORDERS/RECORD OF DECISION 15
G.9.1.2 MANUALS 15
G.9.1.3 HEALTH AND SAFETY 15
G.9.1.4 QUALITY ASSURANCE 15
G.9.2 DRAWINGS 15
G.9.3 EQUIPMENT VENDOR MANUALS 15

LIST OF APPENDICES

APPENDIX G-1 MAINTENANCE LOG

G.1.0 INTRODUCTION

G.1.1 PURPOSE AND ORGANIZATION OF REPORT

This O&M Plan outlines operation and maintenance requirements for the Air Sparge/Soil Vapor Extraction Treatment System at the Radio Materials Site in Attica, Indiana (Site).

The O&M Plan is organized as follows:

1. Section 1.0 presents the purpose and organization of the report
2. Section 2.0 provides a description of the project
3. Section 3.0 provides a description of the control systems
4. Section 4.0 presents the system operations
5. Section 5.0 describes monitoring
6. Section 6.0 presents the reporting plan
7. Section 7.0 describes the personnel
8. Section 8.0 describes the records
9. Section 9.0 provides references

G.2.0 PROJECT DESCRIPTION

The treatment system design consists of groundwater interceptor trenches, in situ air sparging, and soil vapor extraction.

G.2.1 INTERCEPTOR TRENCHES

A total of eight groundwater interceptor trenches will be installed to create a treatment zone approximately 1,000 feet wide. Each trench will be approximately 110 feet long by 2 feet wide and will be excavated to bedrock. The trenches will be designated 1A, 1B, 2A, 2B, 3A, 3B, 4A, and 4B. A 3-inch diameter slotted polyvinyl chloride (PVC) air sparge (AS) pipe will be placed in the bottom of each trench and connected to solid 3-inch diameter riser pipe at each end of the trench. Approximately 10 feet of gravel backfill will be placed over the AS pipe. A 4-inch diameter slotted soil vapor extraction (SVE) pipe will be placed into the top foot of the gravel and connected to a single solid 4-inch diameter riser pipe. A polyethylene liner will be placed over gravel backfill and the trench will be backfilled to grade with native soil. The AS riser pipes from two adjoining trenches (i.e., 1A and 1B) will be tied into a solid 4-inch diameter header pipe that will run to the treatment building. Likewise, the SVE riser pipes from the same adjoining trenches will be tied to a single header pipe running to the treatment building. A total of four AS and four SVE header pipes will run from the treatment building to the trenches.

G.2.2 MOISTURE SEPARATORS AND TRANSFER PUMP

The system will be equipped with two moisture separators. The two SVE headers pipes from trenches 1A and 1B and trenches 2A and 2B will connect to one moisture separator. The two SVE headers pipes from trenches 3A and 3B and trenches 4A and 4B will connect to the other moisture separator. The liquid discharge lines from the two moisture separators will be connected to a single transfer pump with a capacity of 15 gallons per minute. Each moisture separator will be equipped with a level transmitter and a high level switch. When the high level set point in either of the moisture separators is reached, the system controller will turn on the transfer pump. The transfer pump will remove the water from the moisture separators and discharge it back into the interceptor trench.

G.2.3 AIR SPARGE BLOWERS

Volatile organic compound (VOC) contaminants in the groundwater will be removed by means of air sparging. This involves the injection of air into the groundwater in order to volatilize organic contaminants. Two blowers located in the treatment building will provide the air. The design air flow rate of each blower is 400 standard cubic feet per minute (scfm). One blower will supply the air for injection in trenches 1A, 1B, 2A, and 2B. The other blower will supply the air for trenches 3A, 3B, 4A, and 4B. Inlet silencers will be provided for both blowers to help reduce system noise.

G.2.4 SVE BLOWERS

VOC contaminants in the soil pore spaces will be removed by means of soil vapor extraction. Two blowers located in the treatment building will provide the vacuum for the SVE process. The design air flow rate of each blower is 600 scfm. One blower will provide the vacuum for vapor extraction in trenches 1A, 1B, 2A, and 2B. The other blower will supply the vacuum for trenches 3A, 3B, 4A, and 4B. The extracted soil vapors will not require treatment and will be discharged directly to the atmosphere. The SVE discharge will go through exhaust silencers to help reduce system noise.

Other equipment to be provided includes all necessary switches, gauges, system controls, alarms, main disconnect, etc., to operate and maintain the system. The treatment equipment will be housed in a heated, weatherproof building, which will protect the equipment and reduce noise levels.

G.3.0 CONTROL SYSTEMS

The AS/SVE treatment system is designed to operate continuously, 24 hours per day. Controls for the system will primarily consist of the following:

- Pressure sensors will be installed in the four AS pipes at the treatment building for use in monitoring and controlling the AS blower speeds
- Vacuum sensors will be installed in the four SVE pipes at the treatment building for use in monitoring and controlling the SVE blower speeds
- Water level sensors and switches will be installed in the moisture separators to control the transfer pump and shut down the SVE blowers in the event that the water level exceeds the high level switch
- Alarms and telemetry system will also be provided to alert maintenance personnel of system failures

G.3.1 PROCESS CONTROL THEORY

The AS/SVE treatment system will use a programmable logic controller (PLC) for system controls.

G.3.2 CONTROL COMPONENTS

G.3.2.1 PROGRAMMABLE LOGIC CONTROLLER (PLC)

A PLC is used as the primary control device. The system PLC receives a series of digital and analog inputs, interprets them based on a written program, and then sends a series of digital and analog outputs to control the blowers, transfer pump, and solenoid activated valves. The system PLC program is designed to operate the treatment system in a fail-safe manner. The system PLC also serves to trigger alarms for the process. The PLC will be connected to a personal computer (PC) based Supervisory Control and Data Acquisition (SCADA) system which allows the operator to view operational parameters and trends, change operational set points, and view and acknowledge alarms.

G.3.2.2 SCADA COMPUTER SYSTEM

The system PLC is tied in to a SCADA software package that allows the operator to view the groundwater treatment system process from a computer screen. This system offers flexibility in process control and allows the operator efficient management of the treatment processes. Alarms that are triggered by the PLC are displayed on the screen display.

In addition, the operator can trend process parameters over the history of stored data. The interface allows the operator to change pertinent operational set points and to start/stop extraction system and treatment system components from the control room.

The operator is provided with all critical process information through the PLC/SCADA interface. The SCADA system also provides reporting and management of operational parameters and alarms.

G.3.2.3 AUTODIALER

The system will be equipped with an autodialer. The autodialer is programmed to dial out and summon the on-call operator in the event of a Treatment System Alarm. In the event of a power failure the autodialer has a battery backup, thus allowing dialing and operator notification. In the event of a shutdown that initiates the autodialer, operator intervention is required to restart the impacted portions of the Treatment System.

G.3.3 ALARMS

Alarms are set to advise the operator when conditions are not within the normal limits. The alarms are triggered through the PLC and, if the alarm is critical, communicated via the autodialer to the on-call operator.

G.3.4 REMOTE ACCESS

The operator may dial up the PC located in the control room via a telephone line. This connection allows the operator to view operational parameters and trends, change operational set points, and view and acknowledge alarms. Therefore, the operator will have access to view and operate the treatment system in the same manner as if the operator was in the control room.

G.4.0 OPERATION AND MAINTENANCE PROGRAM

G.4.1 INTRODUCTION AND BASIS

A successful O&M program for the Site is dependent on frequent and thorough inspections of the Site and the early identification and correction of problems. The intent of the regular inspections is to identify and remediate problems as soon as possible.

The final O&M Plan will be written and revised to appropriately address the completed extraction, forcemain, treatment, and discharge system. The plan will be revised as necessary after completion of construction of the groundwater treatment system. The goal of the O&M program is to maximize system operation and minimize system downtime.

An operations and maintenance program appropriate for this system would include regular site inspections, a scheduled maintenance program, spare equipment and materials inventory, and a maintenance contractor familiarized with the system.

Inventory

An inventory of spare parts and materials will be kept at the Site. The parts and materials in inventory will typically be:

- Not locally warehoused
- Not readily available
- Vital to system operation
- Commonly used in maintenance and repair procedures
- Have a sufficient shelf life as to be placed in inventory

A typical inventory may be composed of fuses, valves, valve rebuild kits, flow meters, electrical tape, relays, solenoid valves, breakers, gasket material, and tools.

The makeup of the inventory will be revised based on system needs.

Downtime

The major causes of downtime include the following: system maintenance, scheduled repairs, unplanned mechanical failures, and power outages.

Scheduled Maintenance

Scheduled maintenance is the scheduled or periodic maintenance of a piece of equipment. The data gathered through a maintenance program are invaluable in determining the frequency of future maintenance and inspections. The volume of maintenance performed is often a balance of increased downtime due to the additional amount of maintenance performed versus the marginal increase in operating time from a reduction in mechanical failures. The O&M program is often revised throughout the life of the system to reflect its needs.

Scheduled Repairs

There are two types of scheduled repairs. One type of scheduled repair is for repair when the near-term failure of a piece of mechanical equipment is apparent. This is typically identified in the course of a periodic inspection or maintenance procedure and is the most common type of repair.

The other type of scheduled maintenance is that based on mechanical operating history of the piece of equipment (mean time to failure). Often, the condition under which the piece of equipment operates dictates the operating life of the component and, as such, an operating history must be developed before this type of repair is effective.

Mechanical and Electrical Failures

These failures may occur without prior warning or give warning but occur before repairs can be made. Failures of this type include clogged valve pilots, motor failures, tripped breakers, and electrical failures. An automatic telephone dialing system will be connected to the system control panel. The auto dialer will immediately sense most failures and call the maintenance contractor and technical staff.

Electrical Service Failures

Power outages are infrequent and usually short lived. Electric utilities have an excellent record of timely repairs to service interruptions. The automatic telephone dialing system will call to report such a failure.

Emergency Shutdown

This process is designed to automatically shut down in a safe manner in the event of an electrical utility failure. In the event of a power failure all process equipment will shut down. In the event of a power failure the autodialer (battery backup provided) will summon the on-call operator.

G.5.0 MONITORING

The operator is responsible for day-to-day operations of the facility including system monitoring, record keeping, and ensuring that potential problems are attended to with necessary maintenance. Maintenance of system components will be performed in accordance with the manufacturer's recommendations and standard industrial practice.

G.5.1 ROUTINE OPERATIONS MONITORING

The operator is responsible for day-to-day operations of the facility including system routine, preventive, and required maintenance. These maintenance and monitoring procedures are designed to maintain compliance with substantive requirements and to maintain efficient system operation. Maintenance of the treatment system components will be performed in accordance with the manufacturer's recommendations and standard industrial practice.

G.5.1.1 MONTHLY MONITORING

Monitoring and an inspection of system operation will be made on a monthly basis. This inspection will include:

- Perform a visual check; walk through the entire treatment building check for leaks, overflows, malfunctioning equipment, or signs of vandalism. Document visual check and findings in logbook
- Perform a visual check of the moisture separator water discharge gallery
- Complete the treatment system inspection log

The inspection will verify the operation of each component of the system as discussed below.

G.5.1.1.1 MOISTURE SEPARATORS

A monthly inspection of the moisture separators located in the treatment building will be performed to verify proper operation. This inspection will include:

- Manual trip of the sump high-high switch to verify proper shutdowns

- Verify operation of pump and discharge lines

G.5.1.1.2 TRANSFER PUMP

A monthly inspection of the AS and SVE blowers and the transfer pump located in the treatment building will be performed to verify proper operation. This inspection will include:

- Cleaning (if necessary)
- Inspect for leaks, corrosion or cracks
- Verify proper operation of transfer pump and level control switches

G.5.1.1.3 BLOWERS

A monthly inspection of the AS/SVE blowers will include:

- Verify proper operation of blowers and controls
- Monitor air pressure and vacuum, flow rate, and temperature
- Visually observe SVE discharge stacks for visible discharge
- Monitor blower cycles, operation duration, and motor amperage

G.5.1.2 SEMI-ANNUAL, INSPECTION, MONITORING, AND MAINTENANCE

Semi-annual monitoring, inspection, and maintenance will include:

- Change alarm batteries and test alarm operation
- Lubricate motors and change oil
- Inspect HVAC components for proper operation

G.5.1.3 ANNUAL, INSPECTION, MONITORING, AND MAINTENANCE

Annual monitoring, inspection, and maintenance will include:

- Inspect building components, including paint, coatings, and roof
- Inspect electrical connections for corrosion and verify tightness
- Calibrate flow meters

G.6.0 REPORTING

G.6.1 INSPECTION AND MAINTENANCE LOGS

The operator will be responsible for maintaining the system inspection logs at the Site. An example maintenance log is included in Appendix F-1. The maintenance log is used to document work/repairs to the system.

Inspection logs and check lists will be included in the updated O&M Plan following construction of the system. Inspection items will include:

- Pressure and vacuum readings from each blower
- Other miscellaneous system information

G.7.0 PERSONNEL

The contact information for the treatment system operating personnel is posted in the treatment building.

G.7.1 STAFFING REQUIREMENTS

The system is designed to operate unattended with the exception of routine inspections, maintenance activities, and response to alarms by the on-call operator.

G.7.2 RESPONSIBILITIES

The treatment system operator is responsible for the following:

- Ensuring O&M procedures and manuals are readily available
- Properly operating and maintaining the system
- Scheduling routine inspections and preventive maintenance
- Maintaining a record keeping system
- Ensuring appropriate health and safety procedures are followed
- Conducting system inspections and maintenance
- Maintaining an inspection log book
- Ensuring compliance with all regulatory requirements

G.8.0 RECORDS

G.8.1 OPERATING INSPECTION

Operations inspection sheets will be filed in the treatment building. Operations logbooks are used to record activities performed while on Site. Active logbooks will be stored in the treatment building.

G.8.2 MAINTENANCE/CALIBRATION

Maintenance and calibration records for each piece of equipment will be filed in the treatment building.

G.9.0 REFERENCES

G.9.1 RADIO MATERIALS SITE DOCUMENTS

G.9.1.1 CONSENT ORDERS/RECORD OF DECISION

- Record of Decision
- Consent Decree
- Statement of Work
- Explanation of Significant Differences

G.9.1.2 MANUALS

The Operation and Maintenance Plan will be stored in the treatment building and be kept in the project file at CRA's Indianapolis, Indiana office.

G.9.1.3 HEALTH AND SAFETY

The Site-Specific Health and Safety Plan will be stored in the treatment building and be kept in the project file at CRA's Indianapolis, Indiana office.

G.9.1.4 QUALITY ASSURANCE

The Phase I Remedial Action Quality Assurance Project Plan will be stored in the treatment building and be kept in the project file at CRA's Indianapolis, Indiana office.

G.9.2 DRAWINGS

As-built system drawings will be stored in the treatment building.

G.9.3 EQUIPMENT VENDOR MANUALS

Manuals for individual equipment will be stored in the treatment building and be kept in the project file at CRA's Indianapolis, Indiana office.

APPENDIX G-1

MAINTENANCE LOG

TABLE G-1

MAINTENANCE LOG
RADIO MATERIALS CORPORATION
ATTICA, INDIANA

Maintenance Task Performed	*Task Performed By*	*Date Started*	*Date Finished*	*Work Inspected By*	*Comments*

APPENDIX H

GROUNDWATER INTERIM CORRECTIVE MEASURES MONITORING PLAN

TABLE OF CONTENTS

Page

H.1.0 INTRODUCTION 1

H.2.0 GROUNDWATER MONITORING PLAN 2
H.2.1 GENERAL DESCRIPTION 2
H.2.2 HYDRAULIC MONITORING NETWORK 2
H.2.3 GROUNDWATER QUALITY MONITORING NETWORK 3
H.2.3.1 UPGRADIENT MONITORING LOCATIONS 4
H.2.3.2 PERFORMANCE MONITORING LOCATIONS 4
H.2.3.2.1 PROXIMAL PERFORMANCE MONITORING LOCATIONS 5
H.2.3.2.2 DOWNGRADIENT PERFORMANCE MONITORING LOCATIONS 5
H.2.3.3 PERIMETER MONITORING LOCATIONS 5
H.2.3.3.1 CROSS-GRADIENT PERIMETER MONITORING LOCATIONS 5
H.2.3.3.2 DISTAL DOWNGRADIENT PERIMETER MONITORING LOCATIONS 6
H.2.4 MONITORING PARAMETERS AND FREQUENCY 6
H.2.4.1 GROUNDWATER SAMPLING AND ANALYTICAL PARAMETERS 6
H.2.4.2 GROUNDWATER MONITORING FREQUENCY 6

H.3.0 INSTALLATION OF NEW MONITORING WELLS AND PIEZOMETERS 8
H.3.1 NEW OVERBURDEN PIEZOMETERS 8
H.3.2 NEW OVERBURDEN MONITORING WELLS 8
H.3.3 NEW BEDROCK MONITORING WELLS 8

H.4.0 SYSTEM SPECIFIC MONITORING PROGRAM 10
H.4.1 GROUNDWATER EXTRACTION AND TREATMENT SYSTEM 10
H.4.1.1 GROUNDWATER EFFLUENT MONITORING 10
H.4.1.2 SYSTEM TELEMETRY 10
H.4.2 AS/SVE SYSTEM TELEMETRY 10

H.5.0 CONTINGENCY PLAN 12
H.5.1 OVERVIEW 12
H.5.2 SYSTEM TELEMETRY 12
H.5.3 GROUNDWATER EFFLUENT MONITORING 12
H.5.4 HYDRAULIC MONITORING AND GROUNDWATER MONITORING DATA 13

LIST OF FIGURES
(Following Report)

FIGURE H.1	PROPOSED EXTRACTION WELL, PIEZOMETER AND MONITORING WELL LOCATIONS - SOUTH OF SUMMIT STREET
FIGURE H.2	PROPOSED MONITORING WELL AND PIEZOMETER LOCATIONS - NORTH OF SUMMIT STREET
FIGURE H.3	PIEZOMETER AND MONITORING WELL LOCATIONS

LIST OF TABLES
(Following Text)

TABLE H.1	GROUNDWATER ICM - HYDRAULIC MONITORING NETWORK
TABLE H.2	GROUNDWATER ICM - GROUNDWATER QUALITY MONITORING NETWORK

LIST OF ATTACHMENTS

ATTACHMENT H.1	CONCENTRATION TREND GRAPHS

H.1.0 INTRODUCTION

This Monitoring Plan has been developed to monitor the effectiveness of the Groundwater Interim Corrective Measures (ICMs). The objective of the groundwater ICMs is to minimize the potential downgradient migration of dissolved phase volatile organic compounds (VOCs) beyond the Site and towards developed areas while the final groundwater corrective action is evaluated as part of the Resource Conservation and Recovery Act (RCRA) Facility Investigation (RFI) and Corrective Measures Study (CMS). The purpose of the Monitoring Plan is to measure the effectiveness of these systems at achieving the ICM objective and to provide the data necessary to optimize the systems during operation. This section identifies the major components that will be included in the monitoring plan, the data to be generated and interpreted, and the data and information that would be indicative of effective system operations. The groundwater ICMs are designed to work in conjunction with in situ chemical oxidation (ISCO) and soil vapor extraction (SVE) ICMs that have already been implemented on Site to reduce potential leaching of VOCs to groundwater.

For the area south of Summit Street, groundwater extraction and treatment is the selected ICM to minimize further potential downgradient migration of VOCs in overburden groundwater. Groundwater extraction and treatment is also the selected ICM for the bedrock aquifer. Extracted groundwater from both aquifers will be treated utilizing air stripping methods prior to discharge to Riley Lake under a National Pollutant Discharge Elimination System (NPDES) permit. For the area north of Summit Street, in situ air sparging/soil vapor extraction (AS/SVE) is the selected ICM to minimize further potential downgradient migration of VOCs in overburden groundwater.

H.2.0 GROUNDWATER MONITORING PLAN

H.2.1 GENERAL DESCRIPTION

Groundwater extraction and treatment technology will be implemented in the area south of Summit Street. The objective of the groundwater extraction and treatment system is to capture the groundwater that may be impacted by VOCs to minimize the potential downgradient migration of VOCs beyond the Site. This will be accomplished through hydraulic control by extracting groundwater from a network of groundwater extraction wells. The extracted groundwater will then be treated using an air stripper and discharged to Riley Lake under NPDES permit No. IN0063657 issued by the Indiana Department of Environmental Management (IDEM).

An AS/SVE treatment trench will be installed in the area to the north of Summit Street. The air sparge system injects air into the saturated zone within a treatment trench to strip VOCs dissolved in the groundwater to the vapor phase. The vapor phase VOCs are removed by the SVE system.

The key components of each system's effectiveness monitoring will be the collection and evaluation of hydraulic head data, groundwater field parameters (conductivity, pH, dissolved oxygen [DO], and oxidation-reduction potential [ORP]), and groundwater analytical data.

Groundwater monitoring will be accomplished through a network that will consist of existing and new piezometers/monitoring wells. The monitoring network will include performance monitoring and as discussed in the following subsections.

Figure H.1 illustrates the proposed and existing extraction, monitoring well, and piezometers to the south of Summit Street. Figure H.2 illustrates the existing and proposed monitoring wells and piezometers to the north of Summit Street. Figure H.3 illustrates the existing monitoring well and piezometer network in the Area.

H.2.2 HYDRAULIC MONITORING NETWORK

Hydraulic monitoring is a key component for groundwater ICM monitoring. For the groundwater extraction and treatment system south of Summit Street, hydraulic monitoring data will be evaluated to confirm that a sufficient radius of capture is propagated from the extraction network to capture the groundwater that may contain VOCs to minimize potential downgradient migration. It is expected that the

groundwater levels within the overburden unit will reach equilibrium in a relatively short period following system startup and optimization (i.e., within a few weeks).

North of Summit Street, hydraulic head measurements will be obtained to determine the effect, if any, on local groundwater flow resulting from AS/SVE operation. When operating the AS/SVE system, it is possible to get a localized groundwater mounding effect due to the turbulence introduced by the air stream. This localized mounding, if severe enough, could result in alteration of the groundwater flow locally and possibly reduce the effectiveness of the treatment system. However, this potential situation will be mitigated by the trench design (e.g., trench media permeability, air flows, etc.). A network of existing monitoring wells and new piezometers will be used to monitor hydraulic head to interpret groundwater flow near the AS/SVE system.

Water level measurements will be collected in accordance with the protocols outlined in the approved Sampling and Analysis Plan (SAP). Depth to water measurements will be measured using an electronic water level meter which will be decontaminated between locations. The water level data, along with survey elevation data, will be used to determine the groundwater elevations and generate groundwater contour maps, which depict the flow of groundwater beneath the Site.

The proposed hydraulic monitoring frequency is outlined below:

- Once prior to start up of the groundwater extraction well network (baseline)
- Weekly for the first month of fully operational ICM
- Monthly for the second, third, and fourth month of ICM operation
- Quarterly thereafter for the first 2 years of ICM operation
- Semiannual thereafter until the final groundwater corrective measures are implemented

The hydraulic groundwater monitoring network is summarized in Table H.1.

H.2.3 GROUNDWATER QUALITY MONITORING NETWORK

Groundwater analytical monitoring will be used to evaluate the long term effectiveness of the groundwater ICMs. The groundwater monitoring network will consist of existing and new monitoring wells and piezometers screened in both the overburden and bedrock aquifers. Upgradient and downgradient groundwater monitoring wells will be

used to collect groundwater data to confirm the limits of VOC impacts and assess the effectiveness of the groundwater ICMs.

It is expected that upgradient VOC concentrations in the groundwater decrease over time as the treatment "front" propagates downgradient. The effects of the groundwater ICM systems should be evident first at the nearest downgradient monitoring wells. Over time, VOC concentrations in groundwater farther downgradient are expected to decline through a combination of treatment, the addition of infiltrating precipitation, and by degradation by natural mechanisms (biotic and/or abiotic).

In general, the groundwater quality monitoring network consists of the following locations:

- Upgradient monitoring locations
- Performance monitoring locations
- Perimeter monitoring locations

The groundwater quality monitoring network is summarized in Table H.2. Concentration trend graphs summarizing the groundwater analytical data for the key groundwater monitoring wells is provided in Attachment H.1. The following subsections describe the monitoring locations listed above in more detail.

H.2.3.1 UPGRADIENT MONITORING LOCATIONS

The purpose of the upgradient monitoring network is to assess the concentrations and concentration trends in the groundwater upgradient of the groundwater ICMs. These data will be useful for evaluating and optimizing system performance. Consistent with observations during the last several groundwater monitoring rounds, it is expected that VOC concentrations in the groundwater upgradient of the groundwater ICMs will continue to decline due to operation of the soil ICMs installed in Solid Waste Management Unit (SWMU) 5, 11, and Area of Concern (AOC) 2 (i.e., the ISCO injections and SVE systems).

H.2.3.2 PERFORMANCE MONITORING LOCATIONS

The ICM performance monitoring locations consist of locations adjacent to (proximal) and directly downgradient of the groundwater ICMs. The primary purpose of

monitoring at these locations is to evaluate system performance (proximal locations) and to evaluate concentration trends downgradient of the groundwater ICMs (downgradient locations).

H.2.3.2.1 PROXIMAL PERFORMANCE MONITORING LOCATIONS

The proximal groundwater quality monitoring network includes overburden and bedrock monitoring locations. The data from the proximal groundwater quality monitoring network will be used to track VOC concentration trends near the groundwater ICMs to monitor effectiveness. The monitoring locations proximal to the groundwater remediation systems should be the first locations to reflect changes in the groundwater quality in response to system operation.

H.2.3.2.2 DOWNGRADIENT PERFORMANCE MONITORING LOCATIONS

The downgradient performance groundwater quality monitoring network consists of overburden and bedrock monitoring locations. One new bedrock monitoring location (BW-25) is also included. The data from the downgradient groundwater quality monitoring network will be used to track VOC concentration trends downgradient of the groundwater ICMs and to monitor the long-term effectiveness of the groundwater ICM.

H.2.3.3 PERIMETER MONITORING LOCATIONS

The groundwater ICM perimeter monitoring locations consist of cross-gradient and distal downgradient monitoring locations. The primary purpose for monitoring at these locations is to confirm the limits of the groundwater plume during implementation of the groundwater ICM.

H.2.3.3.1 CROSS-GRADIENT PERIMETER MONITORING LOCATIONS

Several monitoring wells within the existing monitoring network define the cross-gradient perimeter of the plume. These perimeter cross-gradient locations will be monitored during the implementation of the groundwater ICM to verify the extent of the plume and any changes in the limits of the plume over time.

H.2.3.3.2 DISTAL DOWNGRADIENT PERIMETER MONITORING LOCATIONS

There are two distal downgradient monitoring wells (OB-52 and OB-53) that are located at the downgradient edge of the VOC plume. The data from this distal downgradient perimeter monitoring network will be used to track VOC concentration trends at the far downgradient edge of the plume.

H.2.4 MONITORING PARAMETERS AND FREQUENCY

H.2.4.1 GROUNDWATER SAMPLING AND ANALYTICAL PARAMETERS

Collected groundwater samples will be analyzed for VOCs in accordance with the methods outlined in the approved RFI Quality Assurance Project Plan (QAPP). Groundwater samples will be collected in accordance with the protocols outlined in the approved RFI Work Plan. During each groundwater monitoring round, groundwater field parameters (conductivity, pH, DO, and ORP) will be obtained from each location in accordance with the protocols in the approved RFI QAPP.

The collected analytical data will be validated then entered and stored in an electronic database.

H.2.4.2 GROUNDWATER MONITORING FREQUENCY

A baseline groundwater sampling round will be performed and will include collection and analysis of groundwater samples from the entire monitoring network listed in Table H.2. One month following startup of the system, groundwater samples will be collected from the upgradient and proximal performance monitoring wells listed in Table H.2 to assess any short-term effects of system operation.

Following the initial baseline and first month monitoring rounds, the proposed groundwater analytical monitoring frequency for the first two years of operation is outlined below:

- Quarterly from the upgradient and proximal performance monitoring wells for the first 2 years of ICM operation
- Semiannually from the entire monitoring network for two years following system startup

Following the first two years of operation, the proposed groundwater analytical monitoring frequency is outlined below:

- Semiannually from the upgradient and proximal performance monitoring wells for the first 2 years of ICM operation
- Annually from the entire monitoring network for two years following system startup

Hydraulic monitoring will be performed at the entire hydraulic monitoring network summarized in Table H.1 during every groundwater monitoring round. The groundwater analytical monitoring schedule will remain in effect during periods of system shutdown and restart.

H.3.0 INSTALLATION OF NEW MONITORING WELLS AND PIEZOMETERS

H.3.1 NEW OVERBURDEN PIEZOMETERS

As part of the monitoring program, 15 additional overburden piezometers will be installed for hydraulic monitoring (12 to the south of Summit Street and three to the north of Summit Street). To the south of Summit Street, six new piezometers will be installed within 10 feet of each of the overburden extraction wells, and six new piezometers will be installed at distances ranging from 15 to 30 feet from the overburden extraction wells (see Figure G.1). To the north of Summit Street, three new overburden piezometers will be installed directly downgradient of the AS/SVE trench (see Figure G.2).

The boreholes for the piezometers will be advanced using direct push technology (DPT) methods, a drill rig equipped with hollow stem augers (HSA), or rotary sonic drilling methods. The piezometers will be constructed of a 5-foot length of 1-inch diameter pre-packed polyvinyl chloride (PVC) slot screen and a sufficient length of 1-inch inside diameter PVC riser to extend to the ground surface. The bottom of the piezometer screens will be set at the bedrock interface. The piezometers will be fitted with an aboveground steel protective casing or a flush mount roadway box set in concrete.

H.3.2 NEW OVERBURDEN MONITORING WELLS

Eight additional monitoring wells will be installed for hydraulic monitoring and groundwater quality monitoring (six to the south of Summit Street and two to the north of Summit Street). The new monitoring wells will be installed using a rotary drill rig equipped with HSA or rotary sonic drilling methods. The monitoring wells will be constructed of a 5-foot length of 2-inch diameter number 10 slot PVC slot screen and a sufficient length of 2-inch inside diameter PVC riser to extend to the ground surface. The bottom of the well screens will be set at the bedrock interface. The monitoring wells will be fitted with an aboveground steel protective casing or a flush mount roadway box set in concrete.

H.3.3 NEW BEDROCK MONITORING WELLS

Two additional bedrock monitoring wells (BW-24 and BW-25) will be installed for hydraulic and groundwater quality monitoring. The new monitoring wells will be

installed using rotary sonic drilling methods. The monitoring wells will be constructed of a 10-foot length of 2-inch diameter number 10 slot PVC screen and a sufficient length of 2-inch inside diameter PVC riser to extend to the ground surface. The bedrock wells will be screened in the sandstone unit and will be approximately 100 feet deep. The monitoring wells will be fitted with an aboveground steel protective casing or a flush mount roadway box set in concrete.

H.4.0 SYSTEM SPECIFIC MONITORING PROGRAM

H.4.1 GROUNDWATER EXTRACTION AND TREATMENT SYSTEM

H.4.1.1 GROUNDWATER EFFLUENT MONITORING

Sampling of the treated groundwater discharged to Riley Lake will be performed on a periodic basis as required by the NPDES permit to ensure the permit effluent limits are not exceeded. The NPDES permit will specify the frequency of effluent sampling, the analytes to be monitored, and the effluent limits.

H.4.1.2 SYSTEM TELEMETRY

The groundwater extraction and treatment system telemetry to be monitored includes:

- System run time
- Hours of operation
- Flow
- Blower unit pressure
- Level controls

System telemetry will be recorded concurrent with other monitoring events and saved on log forms.

H.4.2 AS/SVE SYSTEM TELEMETRY

The AS/SVE system telemetry to be monitored includes:

- System pressure
- Vacuum monitoring
- Groundwater DO concentrations
- Hours of operation
- Level controls
- Other

System telemetry will be recorded concurrent with other monitoring events and saved on log forms.

H.5.0 CONTINGENCY PLAN

H.5.1 OVERVIEW

The data collected for the hydraulic and groundwater quality monitoring networks will be used to monitor the short and long-term effectiveness of the groundwater ICMs.

Data and/or information that indicate that the groundwater ICMs may not be performing optimally include:

- System Telemetry
- Groundwater Effluent Monitoring
- Hydraulic Monitoring Data
- Groundwater Quality Data

As discussed below, in the event monitoring data or other system telemetry indicate the systems are not operating optimally, the systems are adjustable. The most common potential issues associated with the above information/data and the responses to these potential issues are discussed below.

H.5.2 SYSTEM TELEMETRY

Examples of system telemetry from the groundwater ICM systems are discussed in Section G.4.0. System telemetry may indicate the system is offline or not performing optimally (i.e., low run times, vacuum/pressure reading not optimal, inadequate flows, etc.).

In the event that telemetry indicates the system is inoperable, the cause may be either equipment or power failure. In the event of a power failure, the system will automatically restart. In the event of an equipment failure, the system will be inspected and the cause of the failure identified and repaired. Once the repair is completed, the system will be restarted and checked for proper operation.

H.5.3 GROUNDWATER EFFLUENT MONITORING

As discussed in Section 4.1.1, regular effluent monitoring is required as a condition of the NPDES permit. In the unlikely event that this monitoring indicates an exceedance of

an effluent limitation, the groundwater extraction and treatment system will be immediately shut down. The cause of the exceedance will be thoroughly investigated and identified. Possible modifications could include, adjusting the air-to-water ratio within the air stripper or the installation of a pre- or post-stripper water treatment component. An additional shallow tray also could be added to the air stripper to increase treatment efficiency. If suspended particles or scaling becomes an operational issue, the treatment system may be modified to include possible pre-filtration or chemical sequestering/pH adjustment. The system will be repaired or modified and the system will be restarted and retested to ensure proper operation.

The design of the groundwater extraction system allows the overall system to be flexible and allows individual well pumping rates to be adjusted to optimize capture based on hydraulic and groundwater analytical data.

H.5.4 HYDRAULIC MONITORING AND GROUNDWATER MONITORING DATA

If hydraulic and groundwater monitoring data indicates that satisfactory capture is not occurring, the groundwater extraction network will be optimized to obtain capture. Possible modifications could include adjustment of the pumping rates or, if required, the installation of additional extraction wells. In the event additional wells need to be installed, the U.S. Environmental Protection Agency (U.S. EPA) will be contacted to discuss the system modifications and a written plan for the modifications will be submitted. The system would not need to be shut down during these modifications.

If hydraulic and groundwater monitoring data indicates that adequate treatment is not occurring within the AS/SVE trench or groundwater mounding is occurring, the system can be modified. Possible modifications could include adjusting air flow rates in segments of the trench, adjusting air injection pressures, adjusting the duration of the operational periods for segments of the trench, installing larger blower units, or the possible installation of additional vertical air sparge wells. Prior to installing new equipment or sparge points, the U.S. EPA will be contacted to discuss the system modifications and a written plan for the modifications will be submitted.

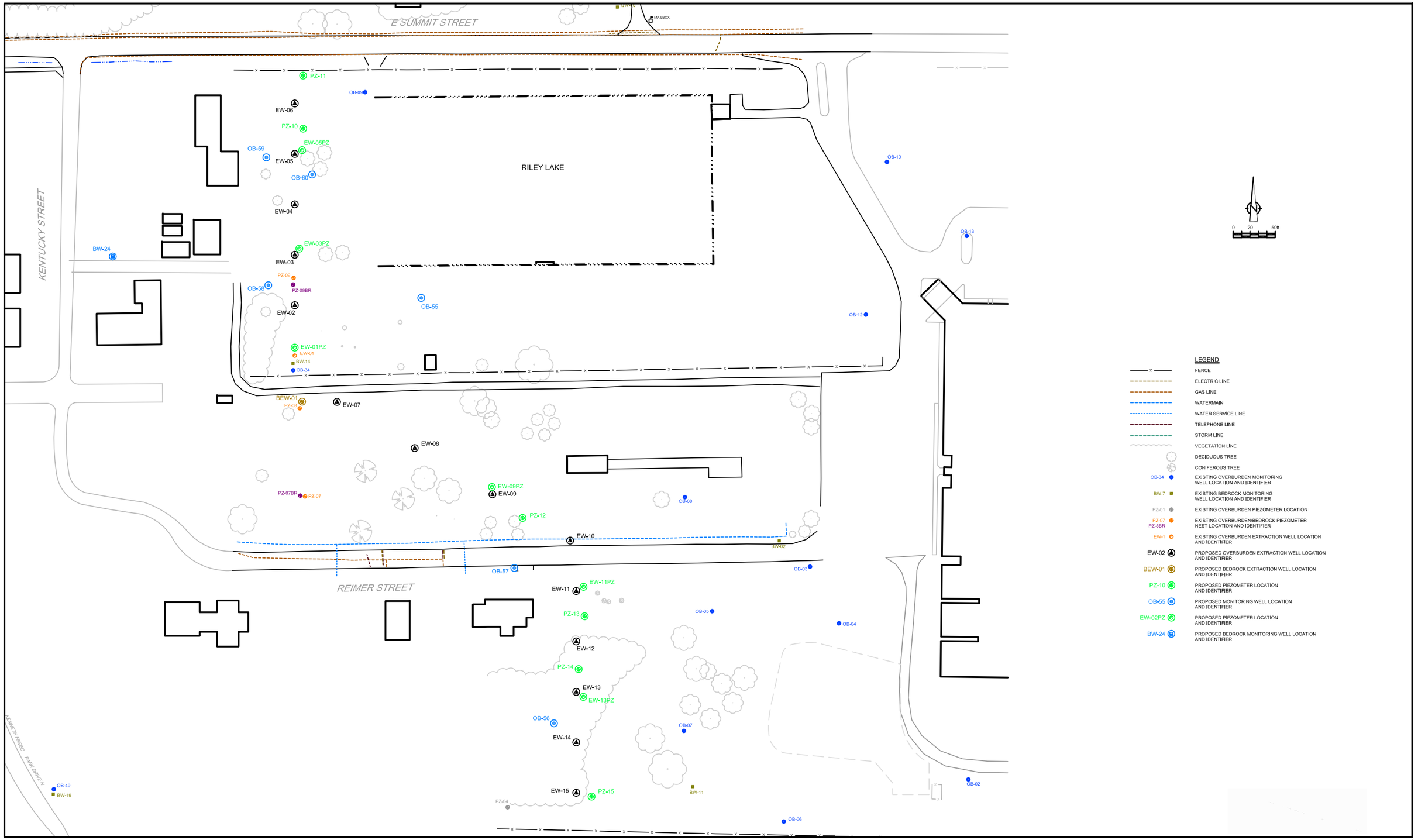

SCALE VERIFICATION: THIS BAR MEASURES 1" ON ORIGINAL. ADJUST SCALE ACCORDINGLY.

No	Revision	Date	Initial

Approved

RADIO MATERIALS CORPORATION
ATTICA, INDIANA

PROPOSED EXTRACTION WELL, PIEZOMETER AND MONITORING WELL LOCATIONS SOUTH OF SUMMIT STREET

CONESTOGA-ROVERS & ASSOCIATES

Source Reference:			Date: 11/12/09
Project Manager: S. WANNER	Reviewed By: W. POCHRON	Designed By:	Drawn By:
Scale: 1:50 AS SHOWN	Project No: 19190-02	Report No: 041	Drawing No: figure H.1

19190-02(041)GN-CO005 OCT 14/2010

E TAYLOR STREET

STM.MH

DERRICK STREET

HOLLOVY STREET

PUBLIC PARK

GRAVEL ROAD

SUMMIT STREET

A

A'

A''

PZ-18

PZ-17

PZ-16

OB-37

OW-62

PROPOSED AS/SVE
TREATMENT
TRENCH

PROPOSED
BUILDING
LOCATION

PROPOSED AS/SVE
TREATMENT
TRENCH

BW-07A

OB-32

BW-07

OW-61

OB-36

BW-25

N

0 40 80ft

LEGEND:

OB-34 EXISTING OVERBURDEN MONITORING WELL LOCATION AND IDENTIFIER

BW-7 EXISTING BEDROCK MONITORING WELL LOCATION AND IDENTIFIER

BW-25 PROPOSED BEDROCK EXTRACTION WELL LOCATION AND IDENTIFIER

OW-63 PROPOSED MONITORING WELL LOCATION AND IDENTIFIER

PZ-18 PROPOSED PIEZOMETER LOCATION AND IDENTIFIER

figure H.2

PROPOSED MONITORING WELL AND PIEZOMETER LOCATIONS NORTH OF SUMMIT STREET RADIO MATERIALS CORPORATION

Attica, Indiana

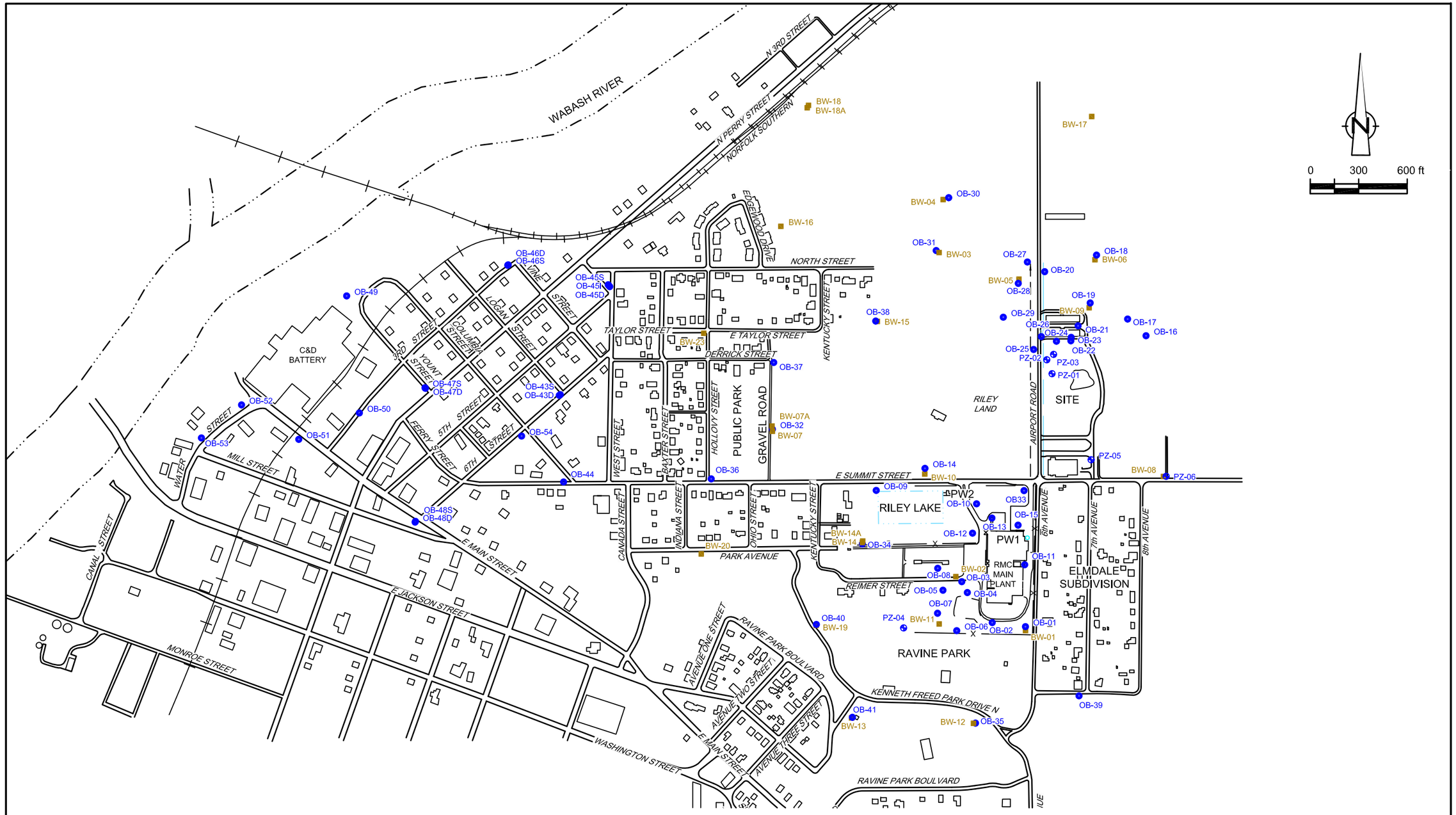

LEGEND

OB-34 ● EXISTING OVERBURDEN MONITORING WELL LOCATION AND IDENTIFIER

BW-7 ■ EXISTING BEDROCK MONITORING WELL LOCATION AND IDENTIFIER

PZ-01 ⊕ EXISTING OVERBURDEN PIEZOMETER LOCATION

figure H.3

PIEZOMETER AND MONITORING WELL LOCATIONS
RADIO MATERIALS CORPORATION
Attica, Indiana

TABLE H.1

GROUNDWATER ICM
HYDRAULIC MONITORING NETWORK
RADIO MATERIALS CORPORATION
ATTICA, INDIANA

Hydraulic Monitoring Location	*Associated ICM System*	*New (N) or Existing (E) Location*	*Purpose*
Groundwater Extraction and Treatment ICM			
Overburden Monitoring Network			
EW-01 (PZ)	GW Extraction	N	Water levels directly adjacent to extraction well
EW-03 (PZ)	GW Extraction	N	Water levels directly adjacent to extraction well
EW-05 (PZ)	GW Extraction	N	Water levels directly adjacent to extraction well
EW-09 (PZ)	GW Extraction	N	Water levels directly adjacent to extraction well
EW-11 (PZ)	GW Extraction	N	Water levels directly adjacent to extraction well
EW-13 (PZ)	GW Extraction	N	Water levels directly adjacent to extraction well
PZ-04	GW Extraction	E	Downgradient water levels
PZ-07	GW Extraction	E	Downgradient water levels
PZ-08	GW Extraction	E	Downgradient water levels
PZ-09	GW Extraction	E	Cross-gradient water levels between extraction well
PZ-10	GW Extraction	N	Cross-gradient water levels between extraction well
PZ-11	GW Extraction	N	Cross-gradient water levels between extraction well
PZ-12	GW Extraction	N	Cross-gradient water levels between extraction well
PZ-13	GW Extraction	N	Cross-gradient water levels between extraction well
PZ-14	GW Extraction	N	Cross-gradient water levels between extraction well
PZ-15	GW Extraction	N	Upgradient water levels between extraction well
OB-01	GW Extraction	E	Upgradient water level data
OB-02	GW Extraction	E	Upgradient water level data
OB-05	GW Extraction	E	Upgradient water level data
OB-06	GW Extraction	E	Upgradient water level data
OB-07	GW Extraction	E	Upgradient water level data
OB-08	GW Extraction	E	Upgradient water level data
OB-09	GW Extraction	E	Upgradient water level data
OB-10	GW Extraction	E	Upgradient water level data
OB-34	GW Extraction	E	Cross-gradient water levels between extraction well
OB-35	GW Extraction	E	Downgradient water level data
OB-40	GW Extraction	E	Cross-gradient water level data
OB-43S	GW Extraction	E	Downgradient water level data
OB-43D	GW Extraction	E	Downgradient water level data
OB-44	GW Extraction	E	Downgradient water level data
OB-45S	GW Extraction	E	Downgradient water level data
OB-47S	GW Extraction	E	Downgradient water level data
OB-47D	GW Extraction	E	Downgradient water level data
OB-48S	GW Extraction	E	Downgradient water level data
OB-48D	GW Extraction	E	Downgradient water level data
OB-49	GW Extraction	E	Downgradient water level data
OB-50	GW Extraction	E	Downgradient water level data
OB-51	GW Extraction	E	Downgradient water level data
OB-52	GW Extraction	E	Downgradient water level data
OB-53	GW Extraction	E	Downgradient water level data
OB-54	GW Extraction	E	Downgradient water level data

TABLE H.1

GROUNDWATER ICM
HYDRAULIC MONITORING NETWORK
RADIO MATERIALS CORPORATION
ATTICA, INDIANA

Hydraulic Monitoring Location	*Associated ICM System*	*New (N) or Existing (E) Location*	*Purpose*
Groundwater Extraction and Treatment ICM			
Overburden Monitoring Network			
OB-55	GW Extraction	N	Upgradient water level data
OB-56	GW Extraction	N	Downgradient water level data
OB-57	GW Extraction	N	Downgradient water level data
OB-58	GW Extraction	N	Downgradient water level data
OB-59	GW Extraction	N	Downgradient water level data
OB-60	GW Extraction	N	Upgradient water level data
Bedrock Monitoring Network			
PZ-07BR	GW Extraction	E	Cross-gradient water level data
PZ-09BR	GW Extraction	E	Cross-gradient water level data
BW-01	GW Extraction	E	Upgradient water level data
BW-02	GW Extraction	E	Upgradient water level data
BW-07	GW Extraction	E	Downgradient water level data
BW-07A	GW Extraction	E	Deeper downgradient water level data
BW-10	GW Extraction	E	Cross-gradient water level data
BW-11	GW Extraction	E	Upgradient water level data
BW-14	GW Extraction	E	Cross-gradient water level data
BW-14A	GW Extraction	E	Deeper cross-gradient water level data
BW-15	GW Extraction	E	Cross-gradient water level data
BW-19	GW Extraction	E	Downgradient water level data
BW-20	GW Extraction	E	Downgradient water level data
BW-23	GW Extraction	E	Downgradient water level data
BW-24	GW Extraction	N	Downgradient water level data
BW-25	GW Extraction	N	Downgradient water level data
Air Sparge and Soil Vapor Extraction ICM			
Overburden Hydraulic Monitoring Network			
PZ-16	AS/SVE	N	Downgradient water level data
PZ-17	AS/SVE	N	Downgradient water level data
PZ-18	AS/SVE	N	Downgradient water level data
OB-14	AS/SVE	E	Upgradient water level data
OB-32	AS/SVE	E	Downgradient water level data
OB-36	AS/SVE	E	Downgradient water level data
OB-37	AS/SVE	E	Downgradient water level data
OB-38	AS/SVE	E	Cross-gradient water level data
OB-61	AS/SVE	N	Upgradient water level data
OB-62	AS/SVE	N	Upgradient water level data

Notes:
GW Extraction - overburden or bedrock groundwater extraction and treatment ICMs
AS/SVE - air sparge/soil vapor extraction ICM

TABLE H.2

GROUNDWATER ICM
GROUNDWATER MONITORING NETWORK
RADIO MATERIALS CORPORATION
ATTICA, INDIANA

	Associated ICM System	*New (N) or Existing (E) Location*	*Rationale*	*Field Parameters*	*VOC Analysis (Y/N)*
UPGRADIENT MONITORING NETWORK					
Overburden Locations					
OB-01	GW Extraction	E	Upgradient water level data	X	Y
OB-05	GW Extraction	E	Upgradient groundwater quality	X	Y
OB-06	GW Extraction	E	Upgradient groundwater quality	X	Y
OB-08	GW Extraction	E	Upgradient groundwater quality	X	Y
OB-09	GW Extraction	E	Upgradient groundwater quality	X	Y
OB-14	AS/SVE	E	Upgradient groundwater quality	X	Y
OB-55	GW Extraction	N	Upgradient groundwater quality	X	Y
OB-61	AS/SVE	N	Upgradient groundwater quality	X	Y
OB-62	AS/SVE	N	Upgradient groundwater quality	X	Y
Bedrock Locations					
BW-01	GW Extraction	E	Upgradient groundwater quality	X	Y
BW-02	GW Extraction	E	Upgradient groundwater quality	X	Y
BW-11	GW Extraction	E	Upgradient groundwater quality	X	Y
BW-10	GW Extraction	E	Upgradient groundwater quality	X	Y
PERFORMANCE MONITORING NETWORK					
System-Proximal Monitoring Network					
Overburden Locations					
PZ-04	GW Extraction	E	ICM system performance	X	Y
PZ-07	GW Extraction	E	ICM system performance	X	Y
PZ-16[1]	AS/SVE	N	ICM system performance	X	N
PZ-17[1]	AS/SVE	N	ICM system performance	X	N
PZ-18[1]	AS/SVE	N	ICM system performance	X	N
OB-32	AS/SVE	E	ICM system performance	X	Y

TABLE H.2

GROUNDWATER ICM
GROUNDWATER MONITORING NETWORK
RADIO MATERIALS CORPORATION
ATTICA, INDIANA

	Associated ICM System	*New (N) or Existing (E) Location*	*Rationale*	*Field Parameters*	*VOC Analysis (Y/N)*
System-Proximal Monitoring Network					
Overburden Locations					
OB-37	AS/SVE	E	ICM system performance	X	Y
OB-56	GW Extraction	N	ICM system performance	X	Y
OB-57	GW Extraction	N	ICM system performance	X	Y
OB-58	GW Extraction	N	ICM system performance	X	Y
OB-59	GW Extraction	N	ICM system performance	X	Y
OB-60	GW Extraction	N	ICM system performance	X	Y
Bedrock Locations					
PZ-07BR	GW Extraction	E	ICM system performance	X	Y
BW-24	GW Extraction	N	ICM system performance	X	Y
Downgradient Monitoring Network					
Overburden Locations					
OB-36	Combined ICMs	E	Concentration Trends	X	Y
OB-43S	Combined ICMs	E	Concentration Trends	X	Y
OB-43D	Combined ICMs	E	Concentration Trends	X	Y
OB-44	Combined ICMs	E	Concentration Trends	X	Y
OB-47S	Combined ICMs	E	Concentration Trends	X	Y
OB-47D	Combined ICMs	E	Concentration Trends	X	Y
OB-50	Combined ICMs	E	Concentration Trends	X	Y
OB-51	Combined ICMs	E	Concentration Trends	X	Y
OB-54	Combined ICMs	E	Concentration Trends	X	Y
Downgradient Monitoring Network					
Bedrock Locations					
BW-07	GW Extraction	E	Concentration Trends	X	Y
BW-25	Combined ICMs	N	Concentration Trends	X	Y

TABLE H.2

GROUNDWATER ICM
GROUNDWATER MONITORING NETWORK
RADIO MATERIALS CORPORATION
ATTICA, INDIANA

	Associated ICM System	*New (N) or Existing (E) Location*	*Rationale*	*Field Parameters*	*VOC Analysis (Y/N)*
PERIMETER MONITORING NETWORK					
Overburden Locations					
OB-38	Combined ICMs	E	Perimeter groundwater quality	X	Y
OB-40	Combined ICMs	E	Perimeter groundwater quality	X	Y
OB-45S	Combined ICMs	E	Perimeter groundwater quality	X	Y
OB-48S	Combined ICMs	E	Perimeter groundwater quality	X	Y
OB-48D	Combined ICMs	E	Perimeter groundwater quality	X	Y
OB-49	Combined ICMs	E	Perimeter groundwater quality	X	Y
OB-52	Combined ICMs	E	Perimeter groundwater quality	X	Y
OB-53	Combined ICMs	E	Perimeter groundwater quality	X	Y
Bedrock Locations					
BW-15	Combined ICMs	E	Perimeter groundwater quality	X	Y
BW-19	Combined ICMs	E	Perimeter groundwater quality	X	Y
BW-20	Combined ICMs	E	Perimeter groundwater quality	X	Y
BW-23	Combined ICMs	E	Perimeter groundwater quality	X	Y

Notes:

GW Extraction - overburden or bedrock groundwater extraction and treatment ICMs
AS/SVE - air sparge/soil vapor extraction ICM
DO - dissolved oxygen
Field Parameters include temperature, conductivity, pH, dissolved oxygen (DO), and oxidation-reduction potential (ORP)
VOC - volatile organic compounds
[1]monitored for DO only

ATTACHMENT H.1

CONCENTRATION TREND GRAPHS

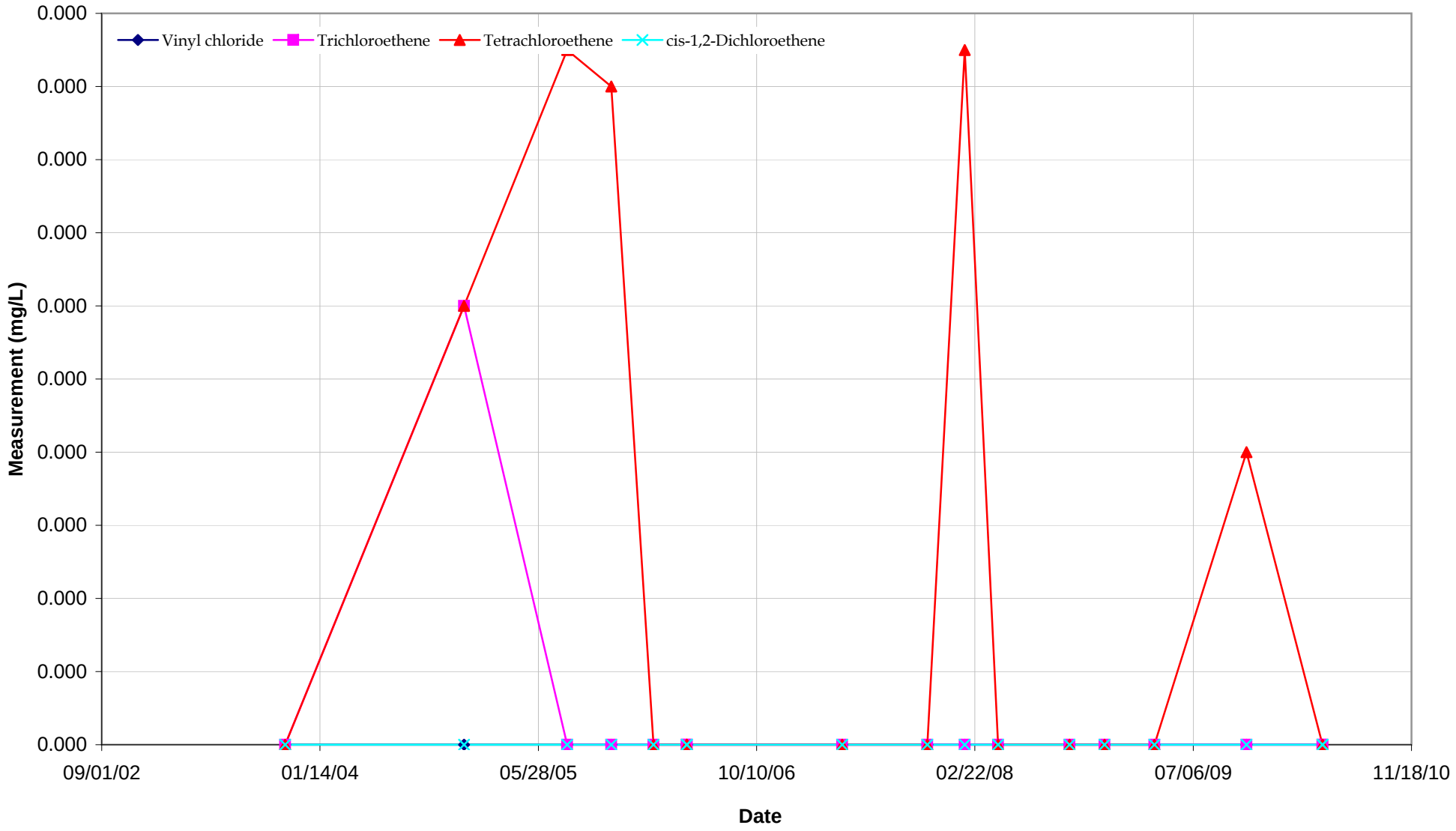

BEDROCK WELLS BW-01

Attica, Indiana

CRA 19190

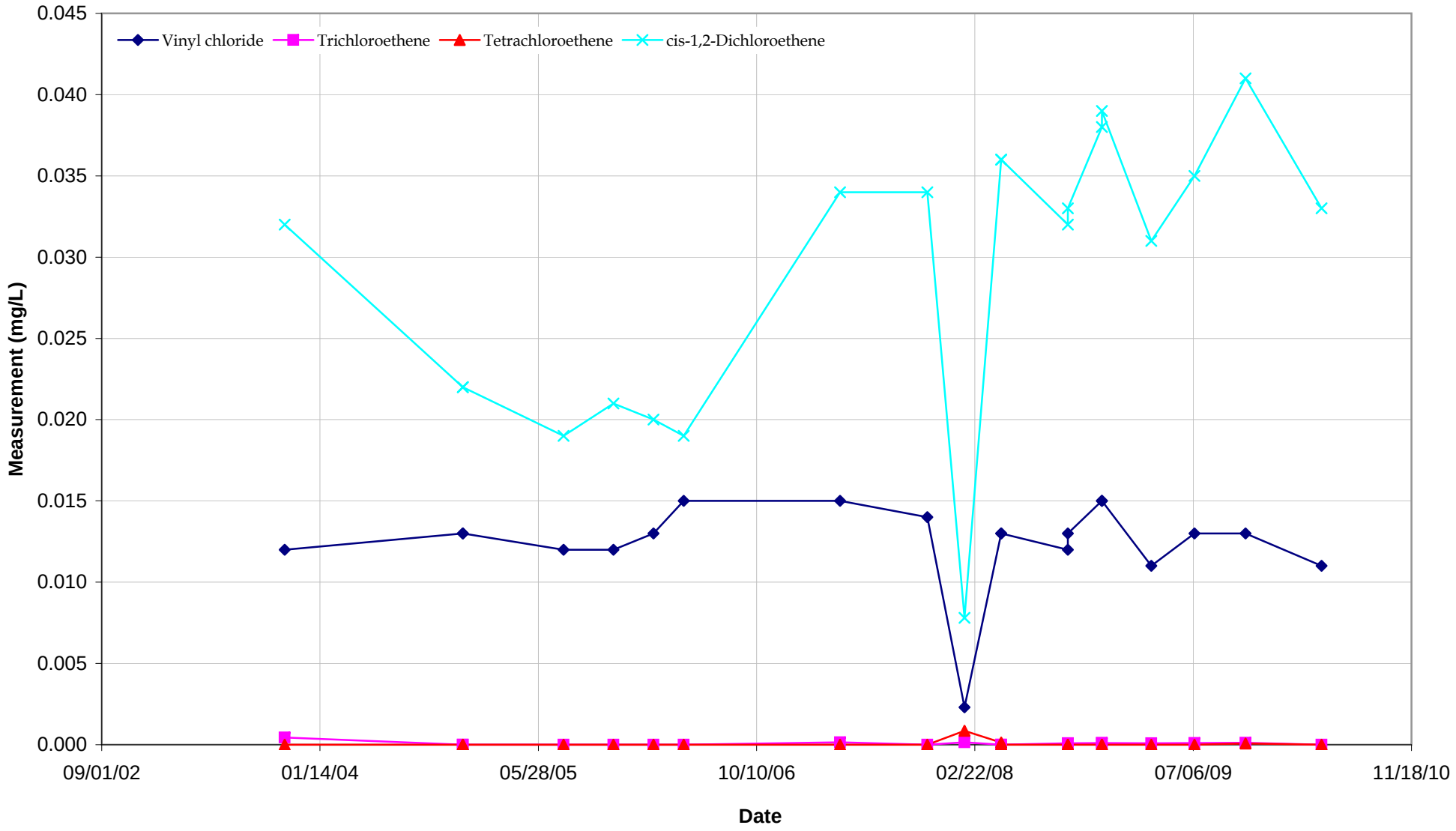

BEDROCK WELLS BW-07

Attica, Indiana

CRA 19190

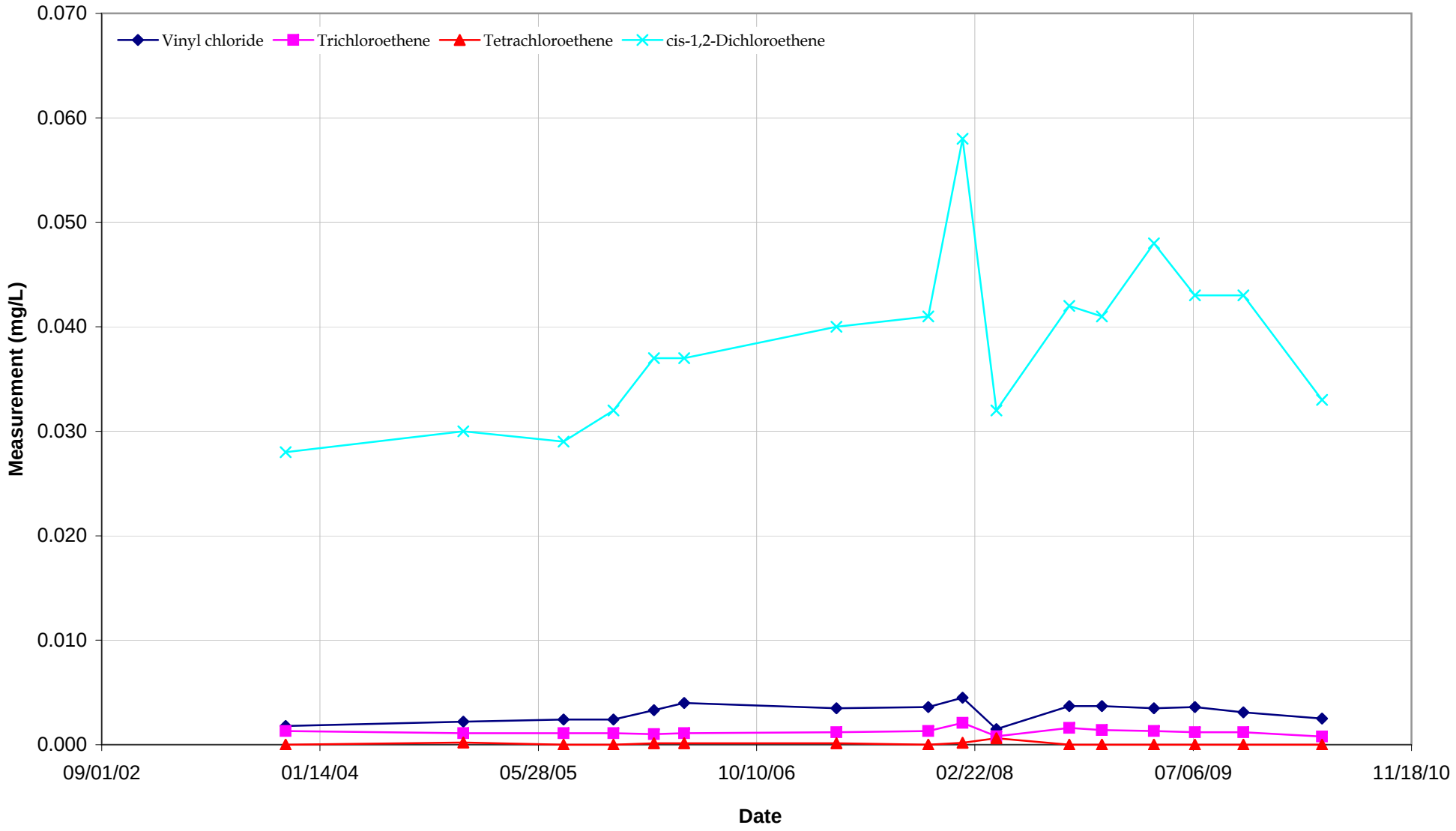

BEDROCK WELLS BW-10

Attica, Indiana

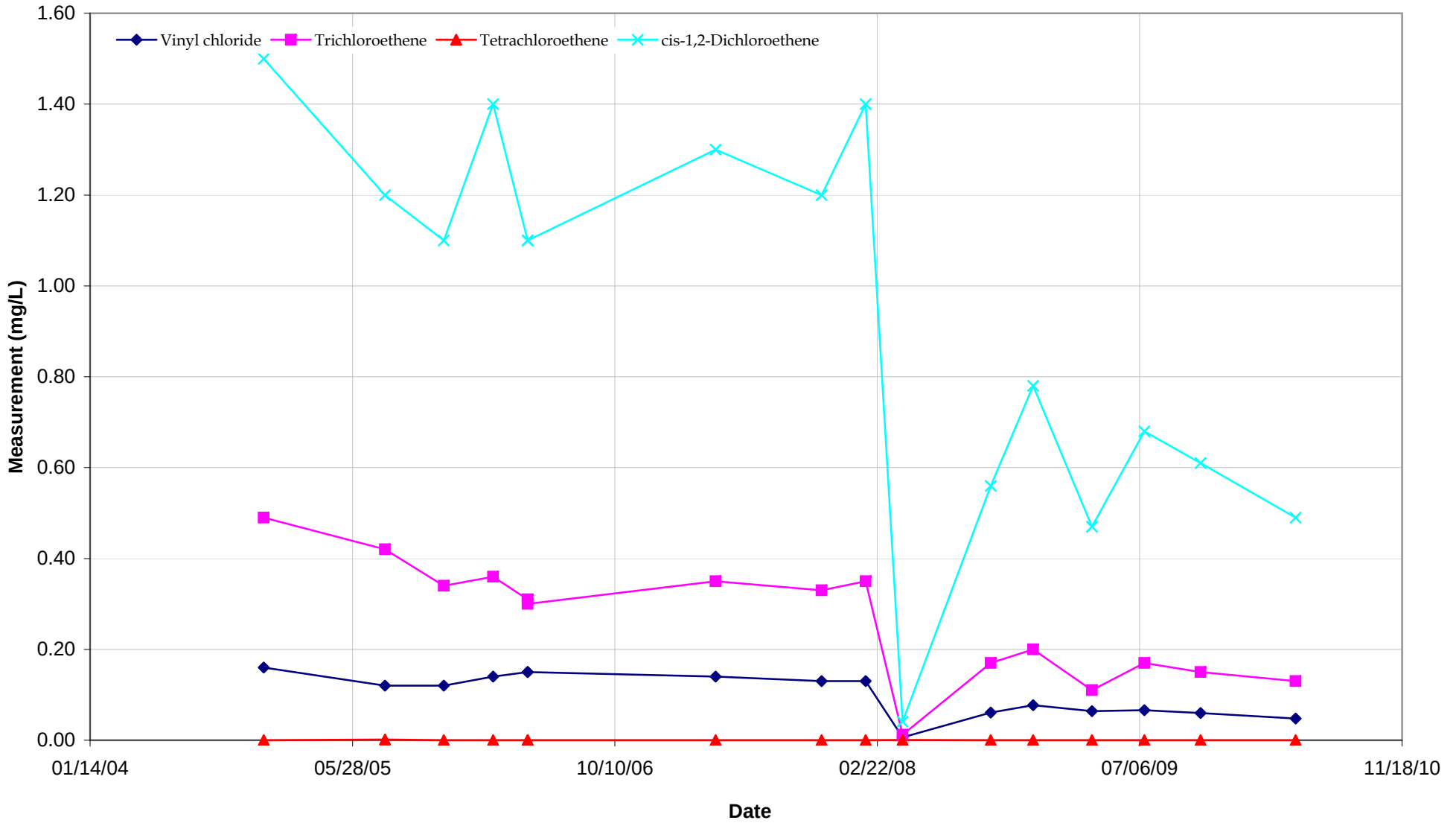

BEDROCK WELLS BW-14

Attica, Indiana

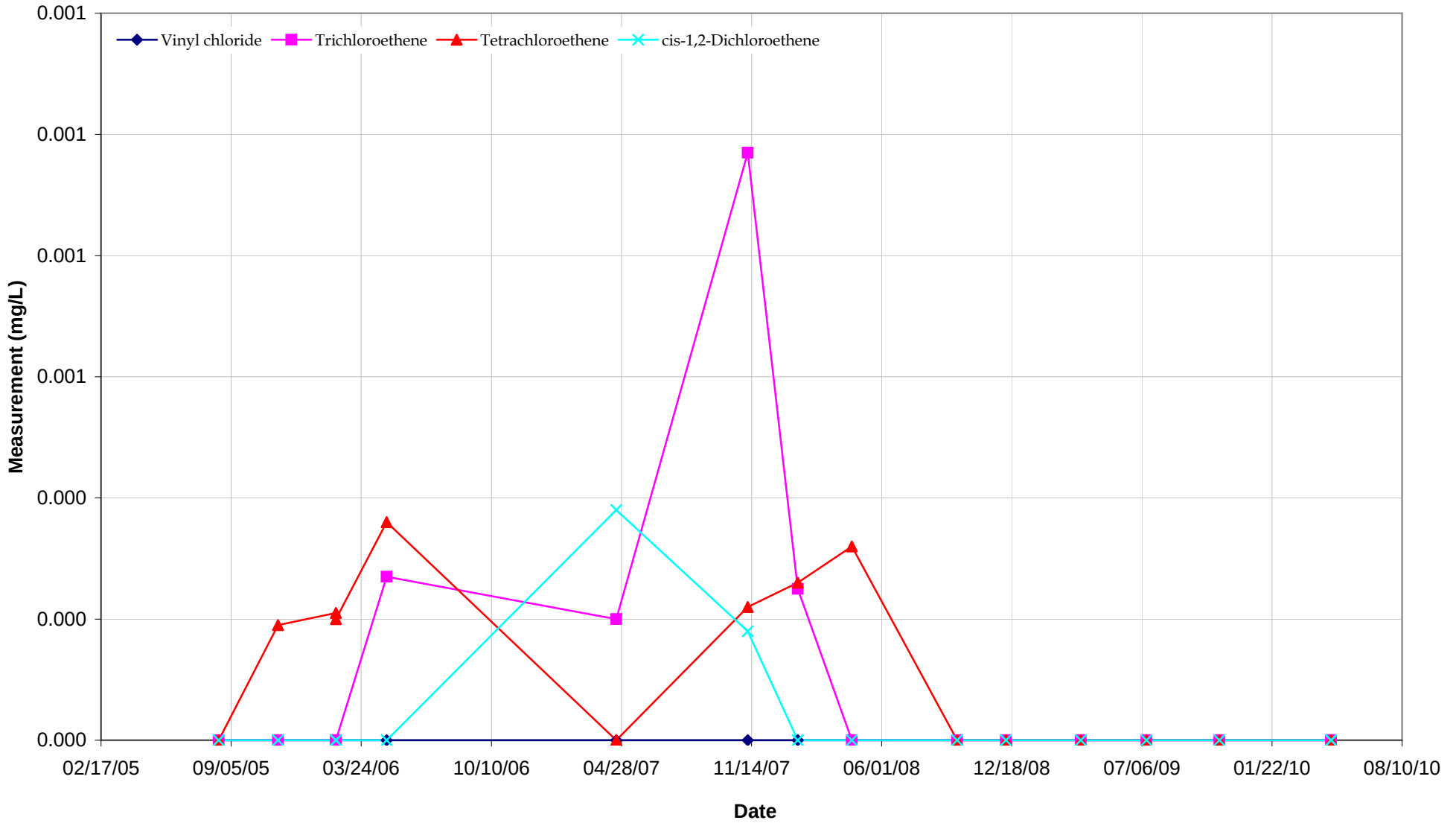

BEDROCK WELLS BW-20

Attica, Indiana

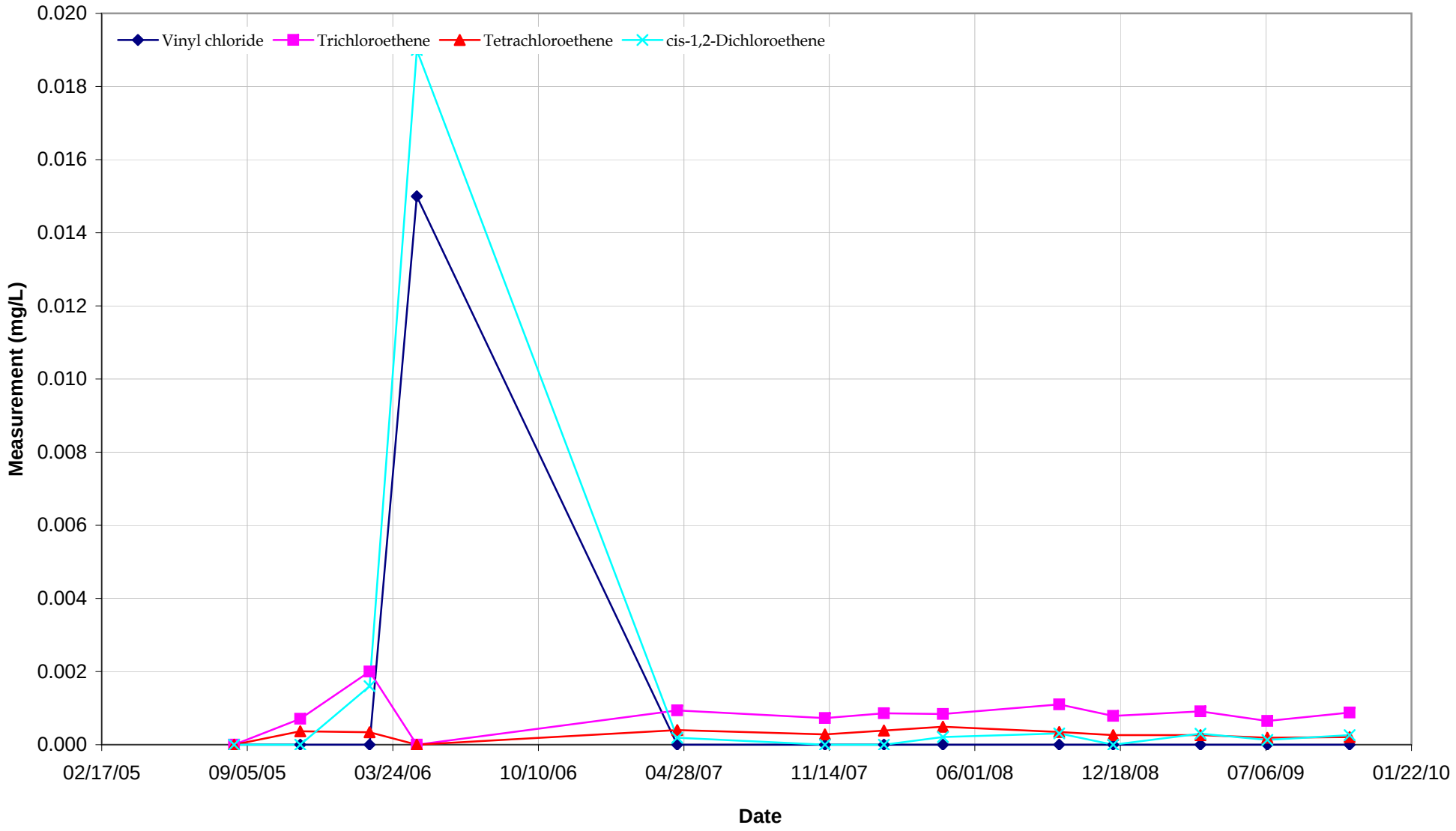

BEDROCK WELLS BW-23

Attica, Indiana

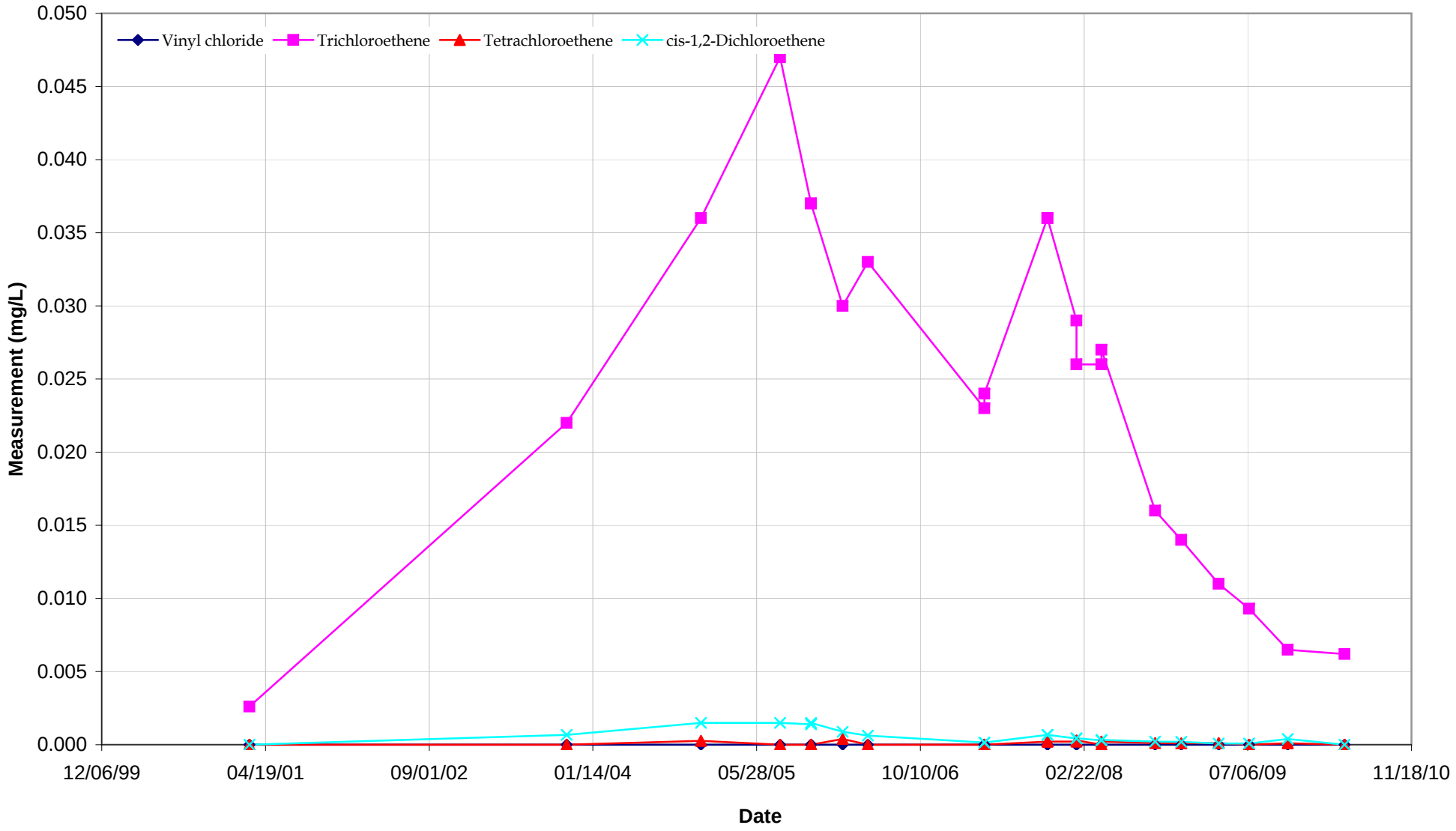

OVERBURDEN WELLS & PIZOMETERS OB-01

Attica, Indiana

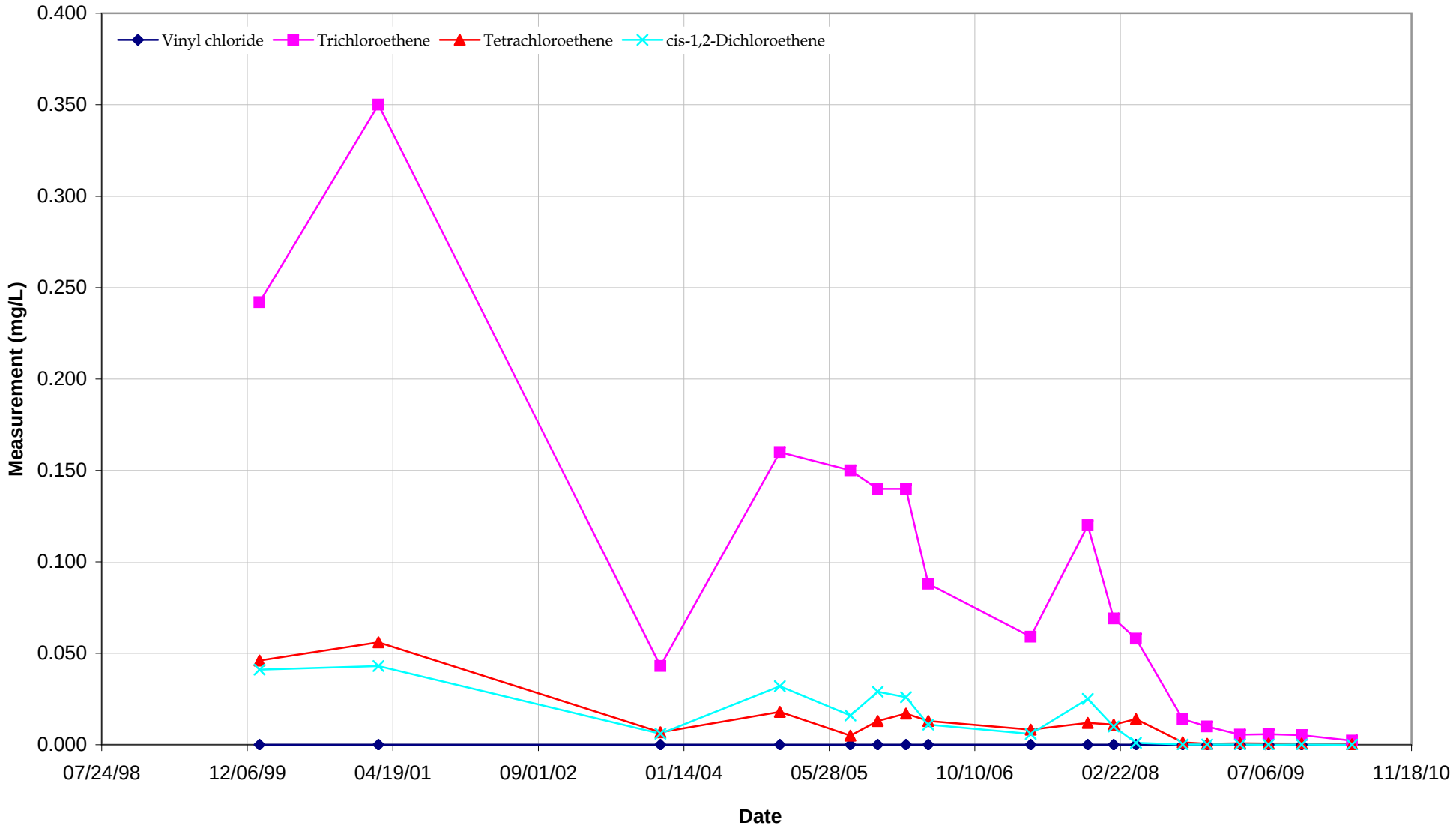

OVERBURDEN WELLS & PIZOMETERS OB-02

Attica, Indiana

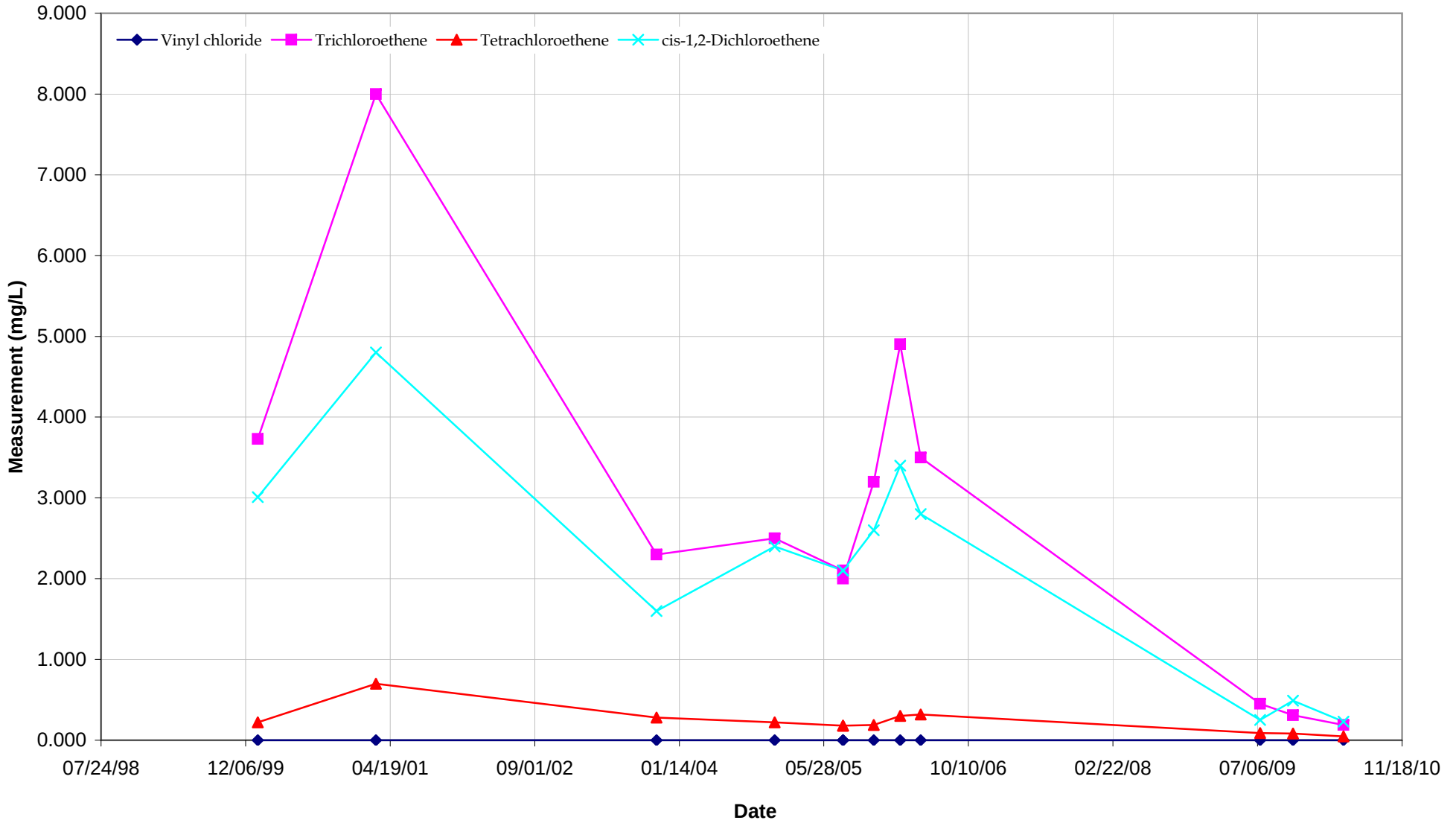

OVERBURDEN WELLS & PIZOMETERS OB-05

Attica, Indiana

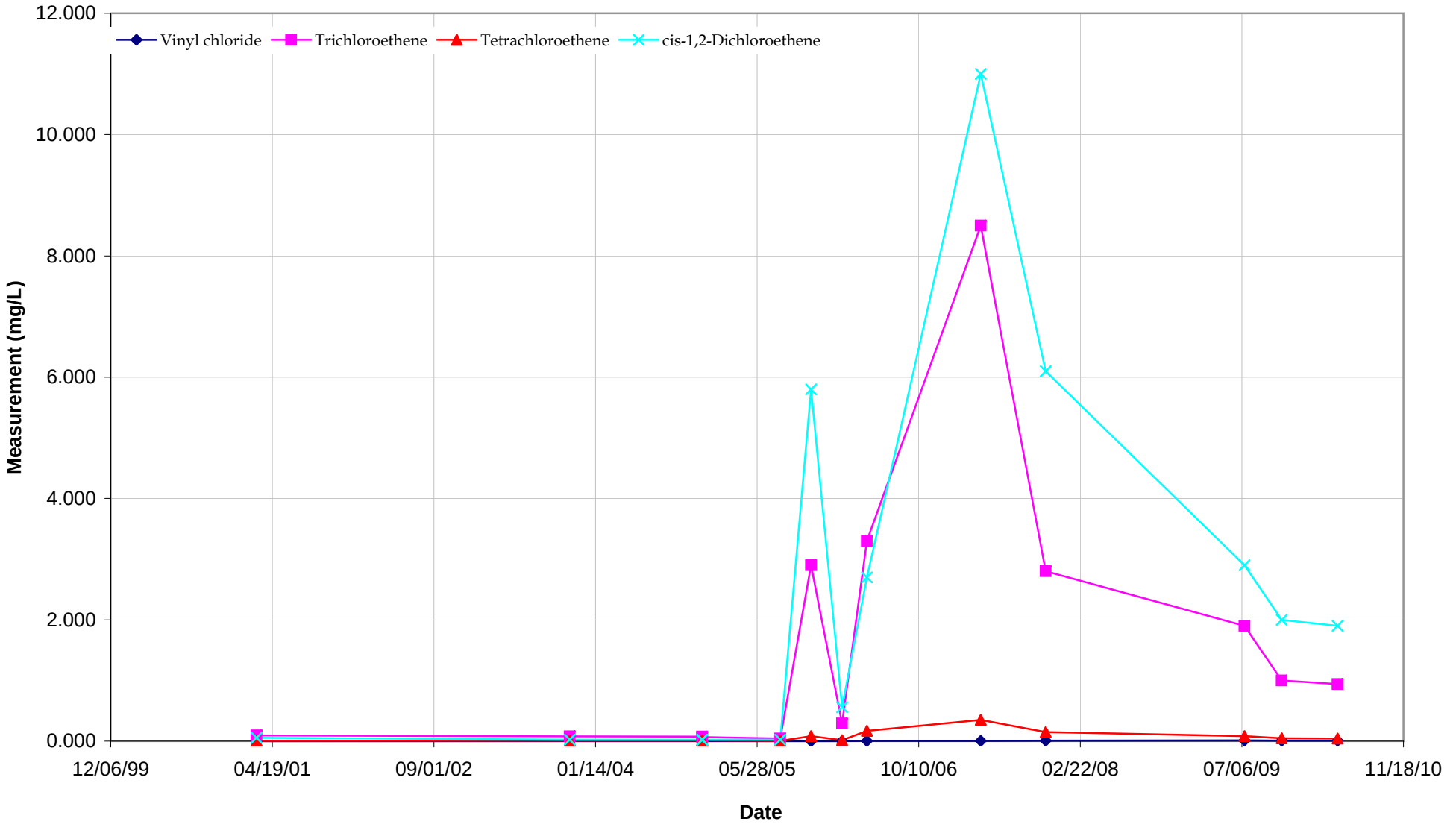

OVERBURDEN WELLS & PIZOMETERS OB-06

Attica, Indiana

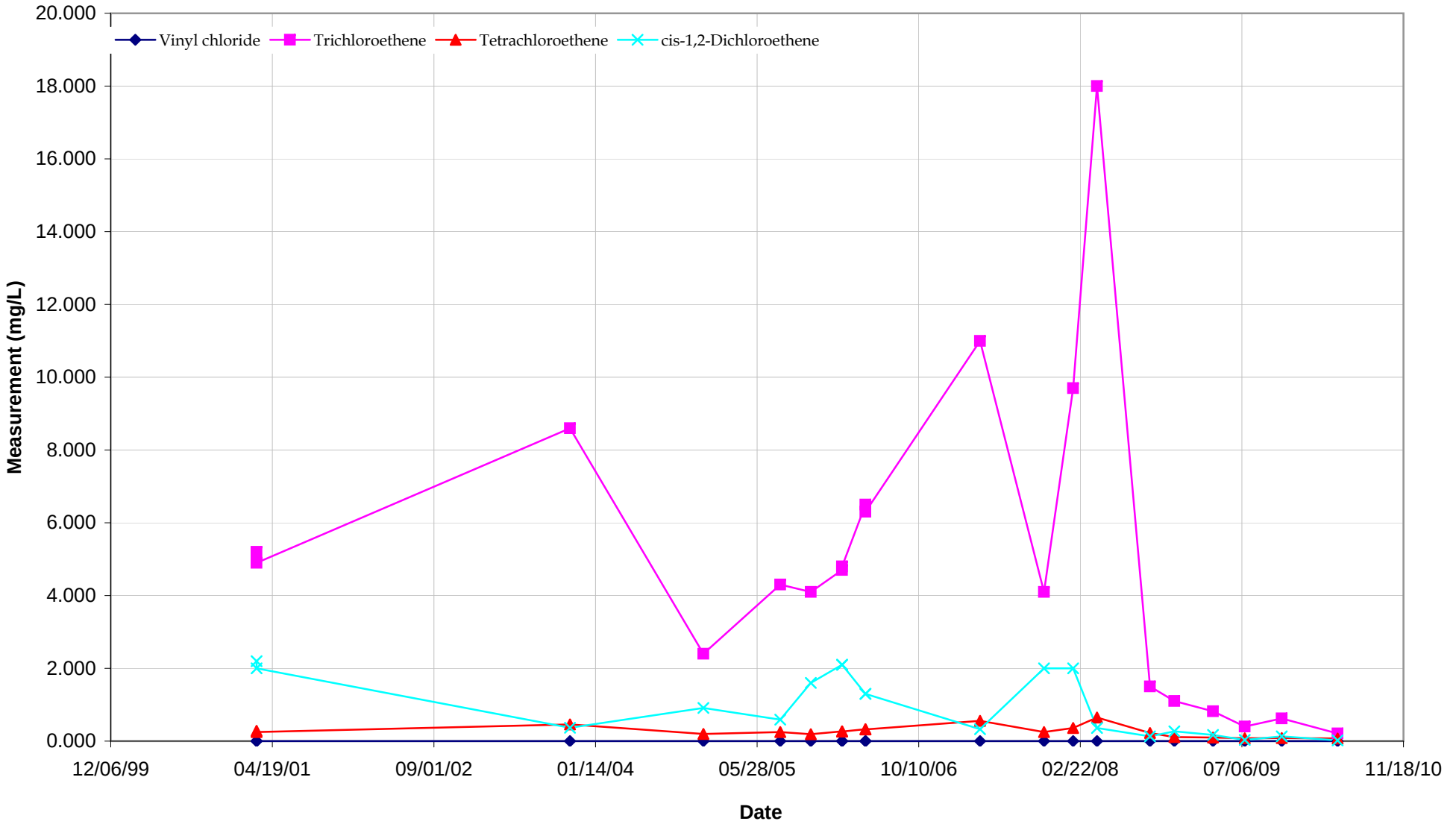

OVERBURDEN WELLS & PIZOMETERS OB-08

Attica, Indiana

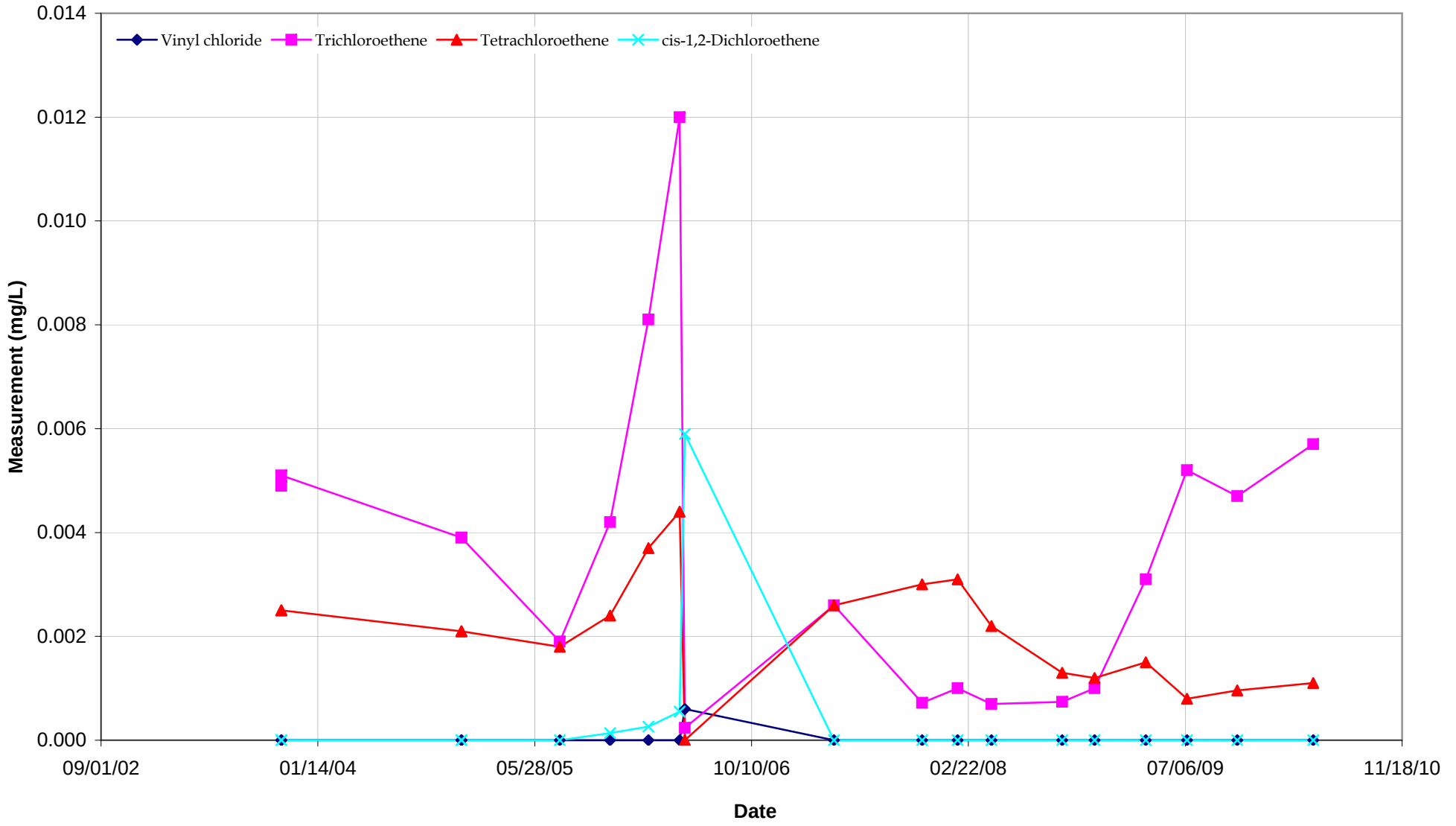

OVERBURDEN WELLS & PIZOMETERS OB-09

Attica, Indiana

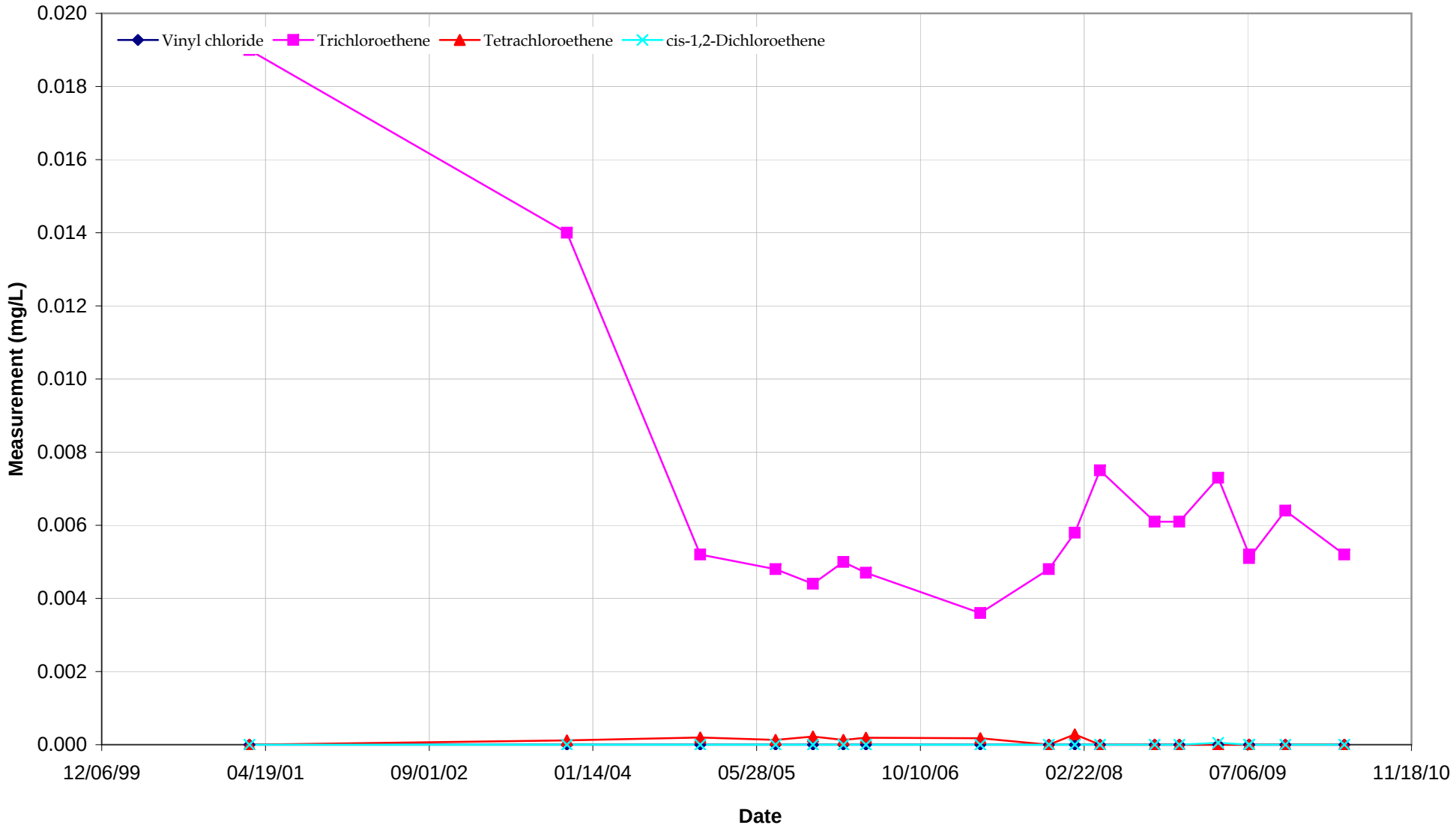

OVERBURDEN WELLS & PIZOMETERS OB-14

Attica, Indiana

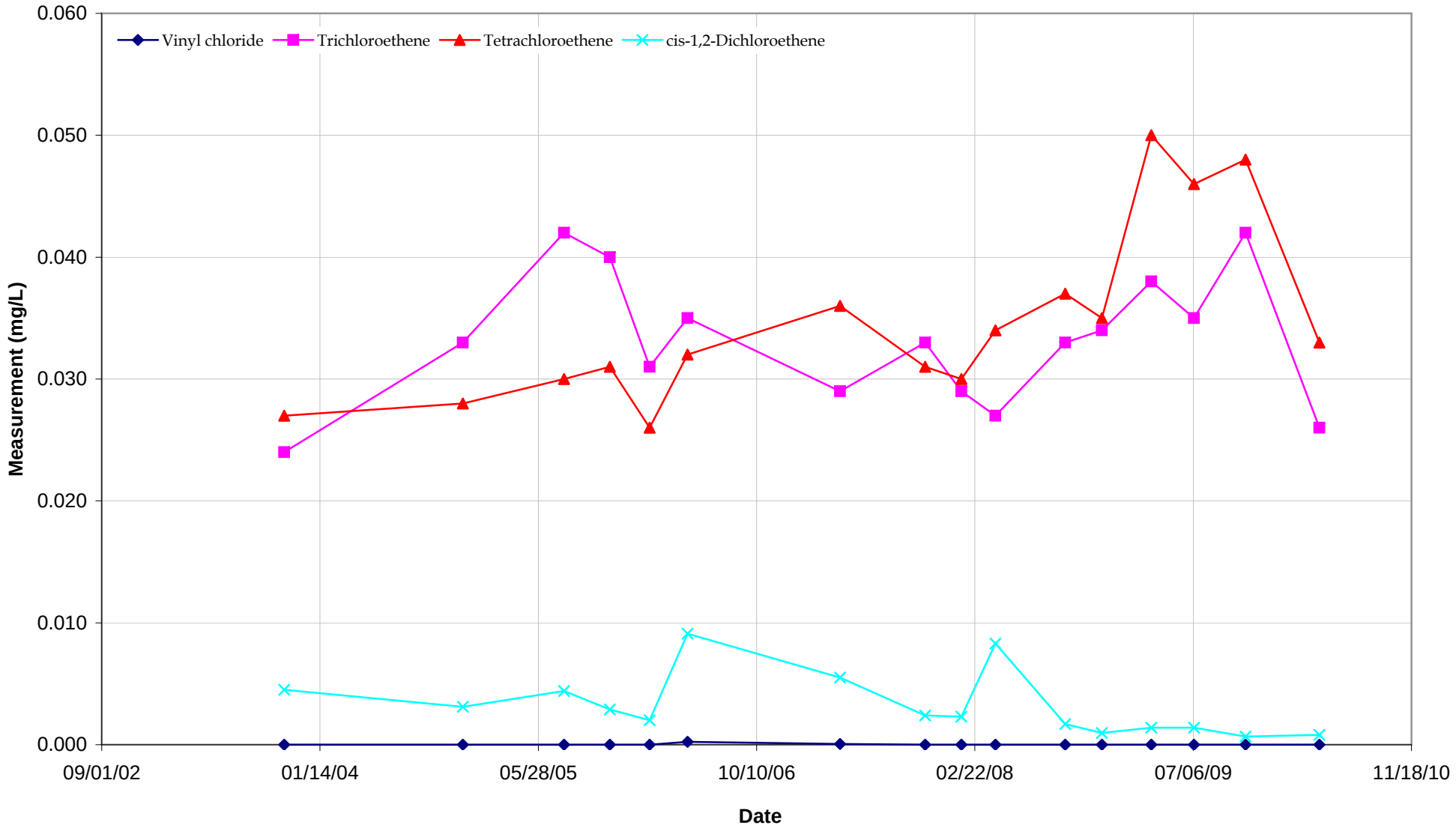

OVERBURDEN WELLS & PIZOMETERS OB-32

Attica, Indiana

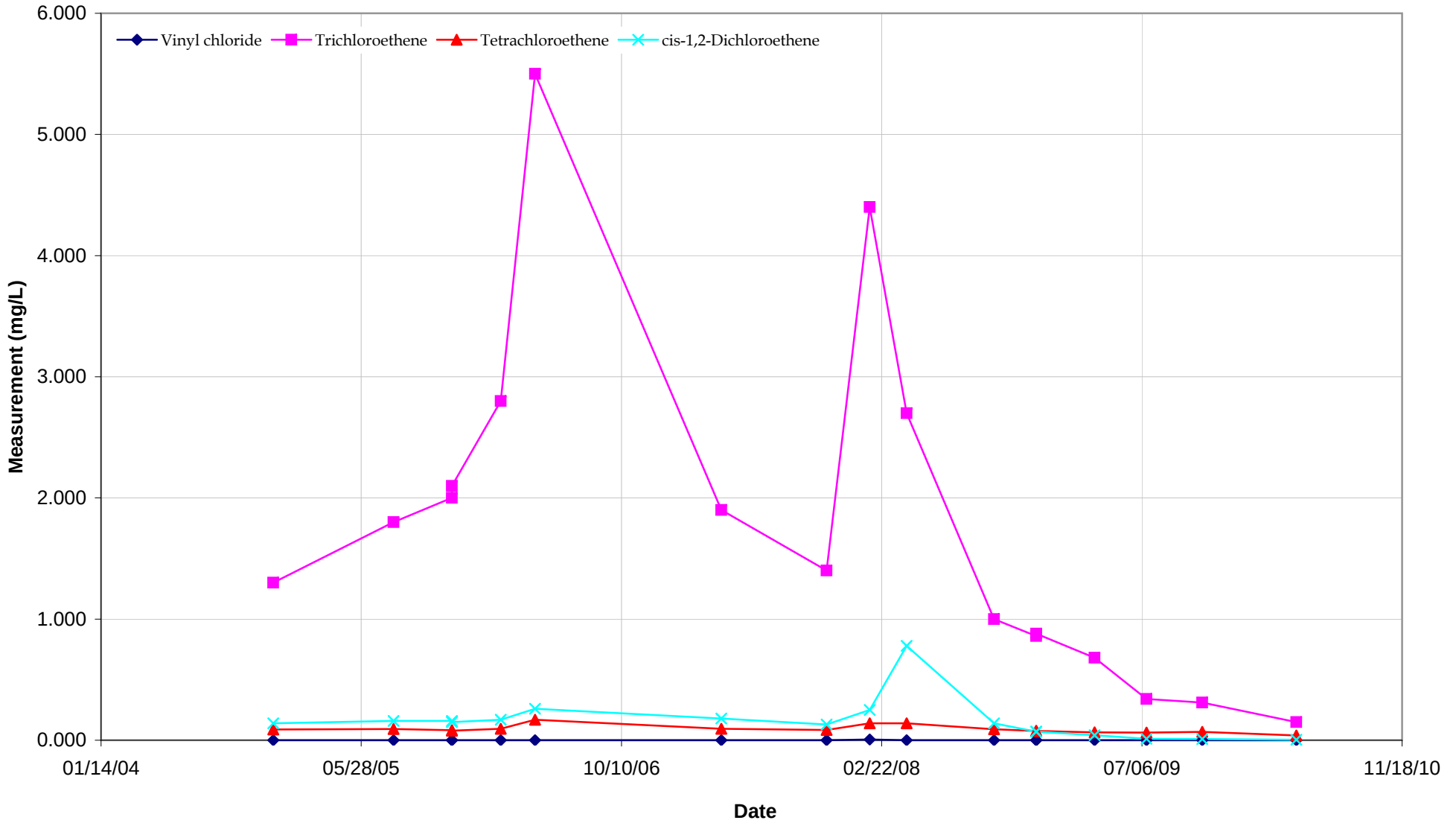

OVERBURDEN WELLS & PIZOMETERS OB-34

Attica, Indiana

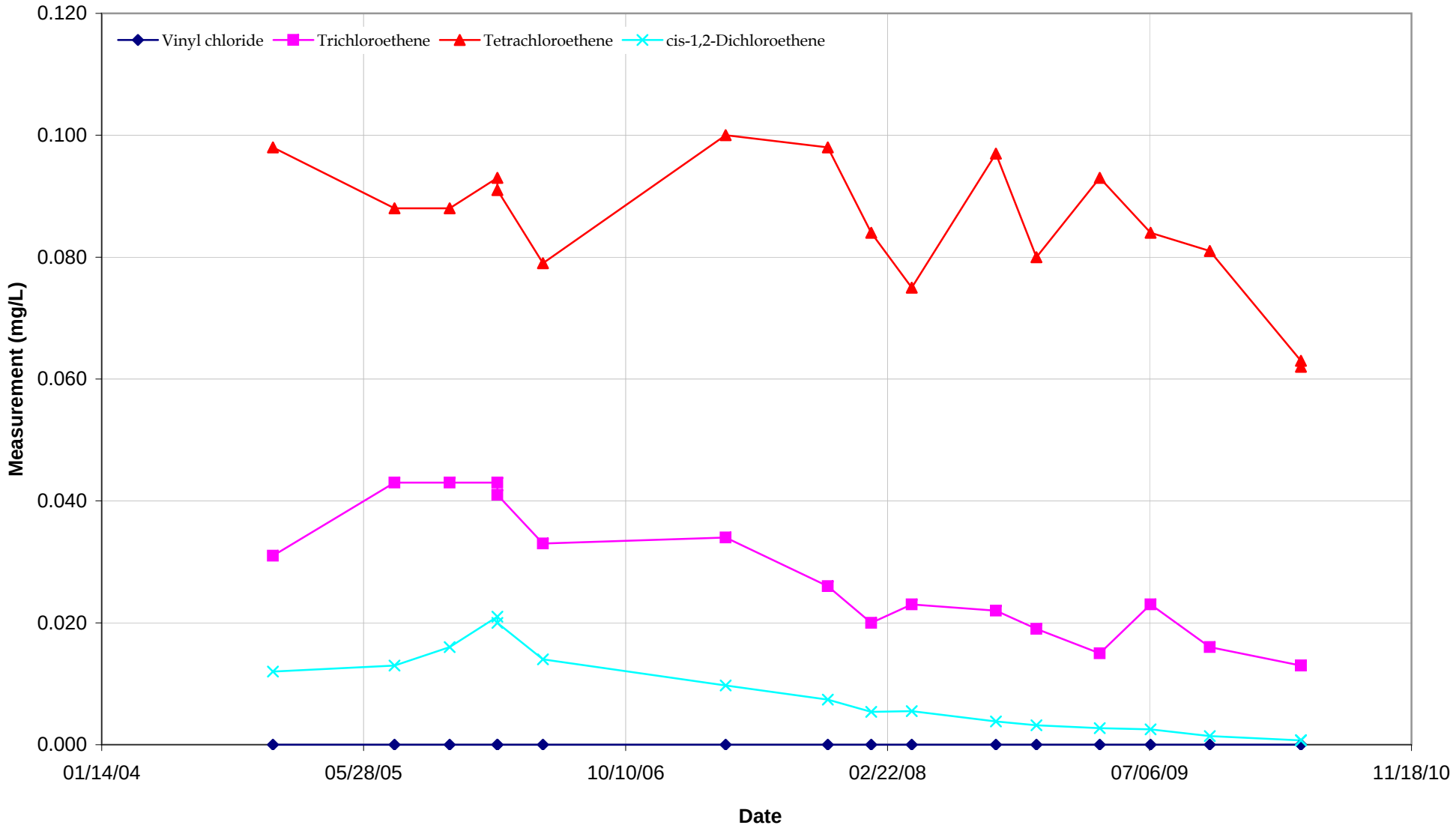

OVERBURDEN WELLS & PIZOMETERS OB-36

Attica, Indiana

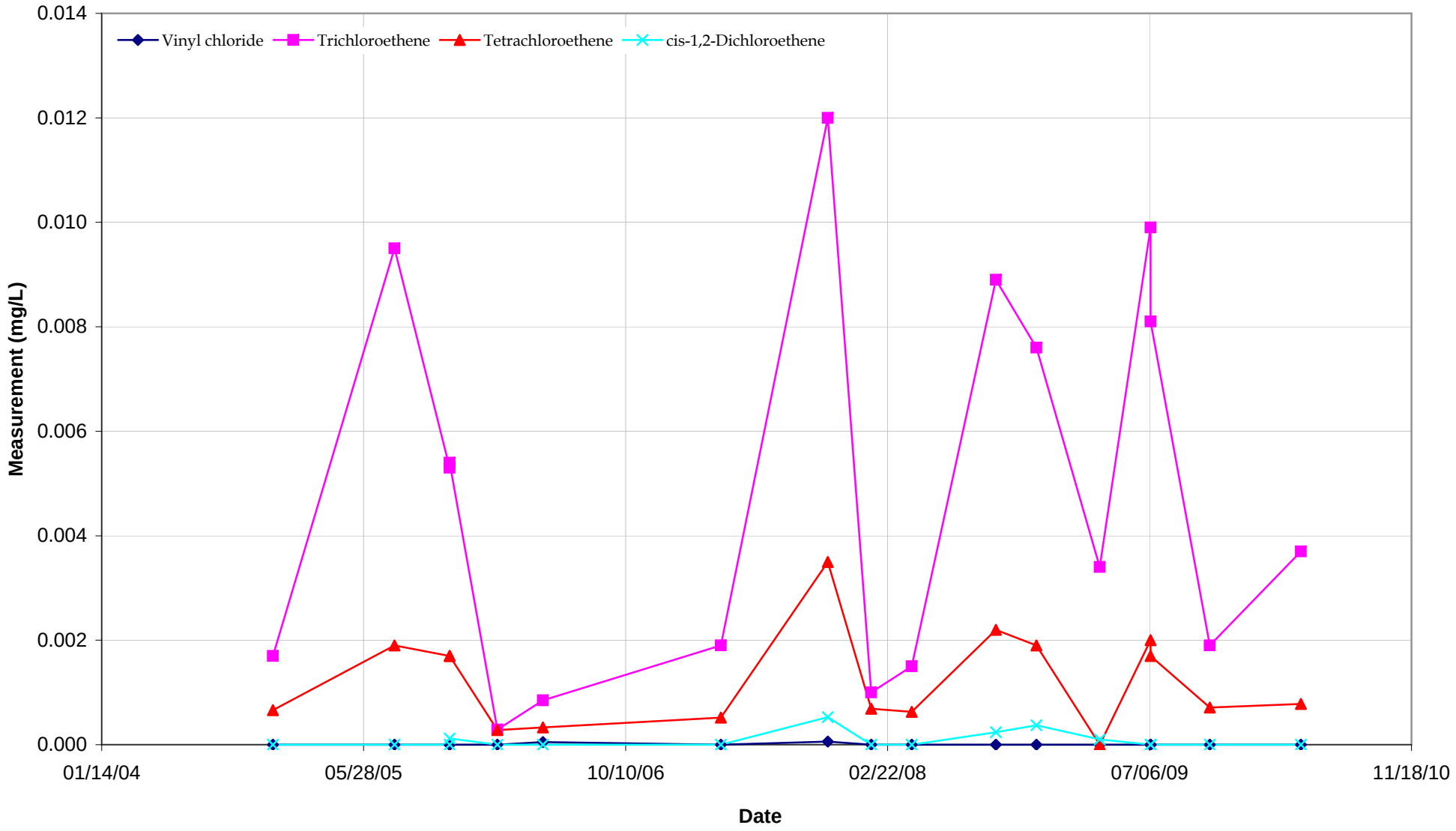

OVERBURDEN WELLS & PIZOMETERS OB-37

Attica, Indiana

CRA 19190

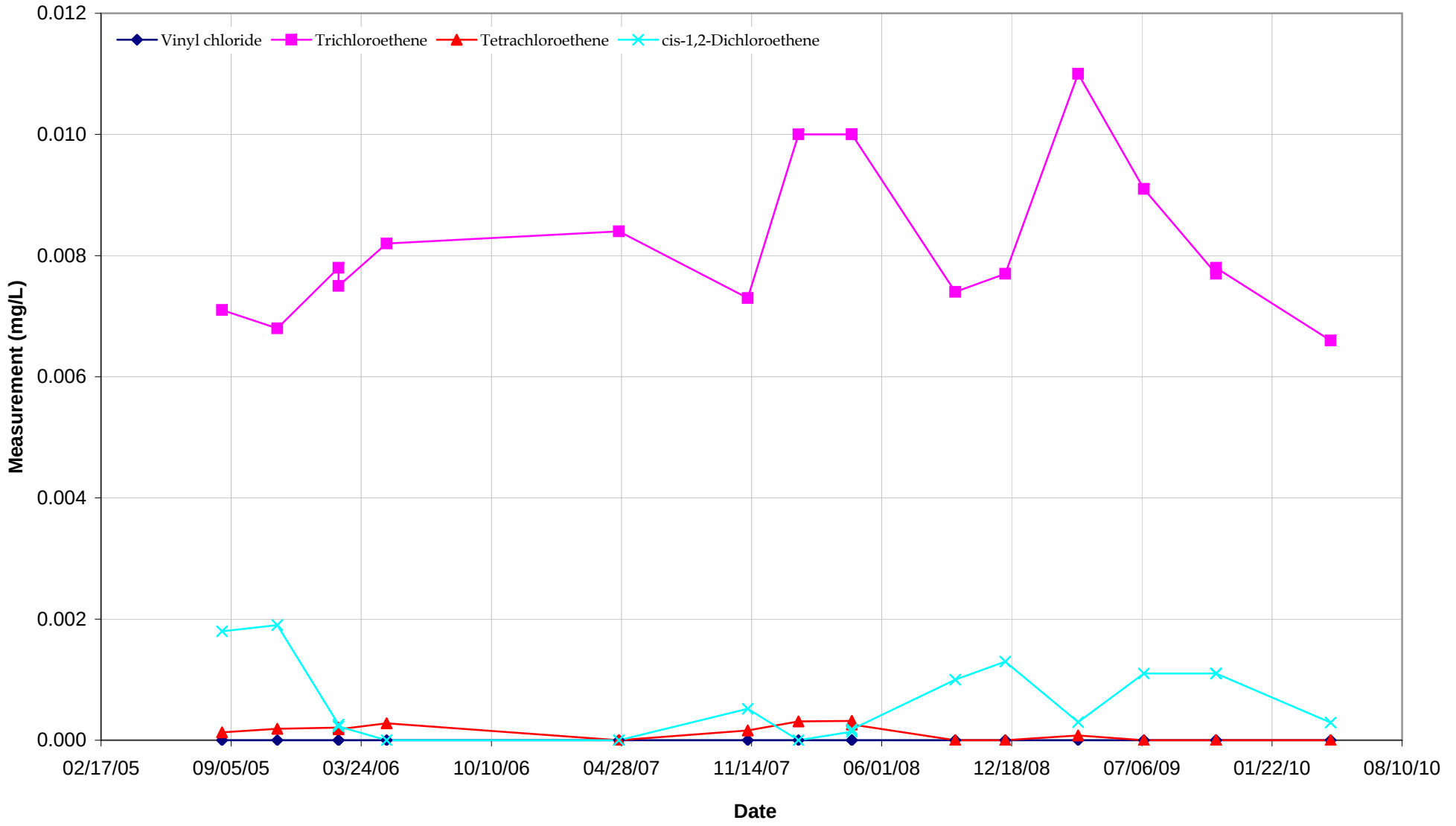

OVERBURDEN WELLS & PIZOMETERS OB-43D

Attica, Indiana

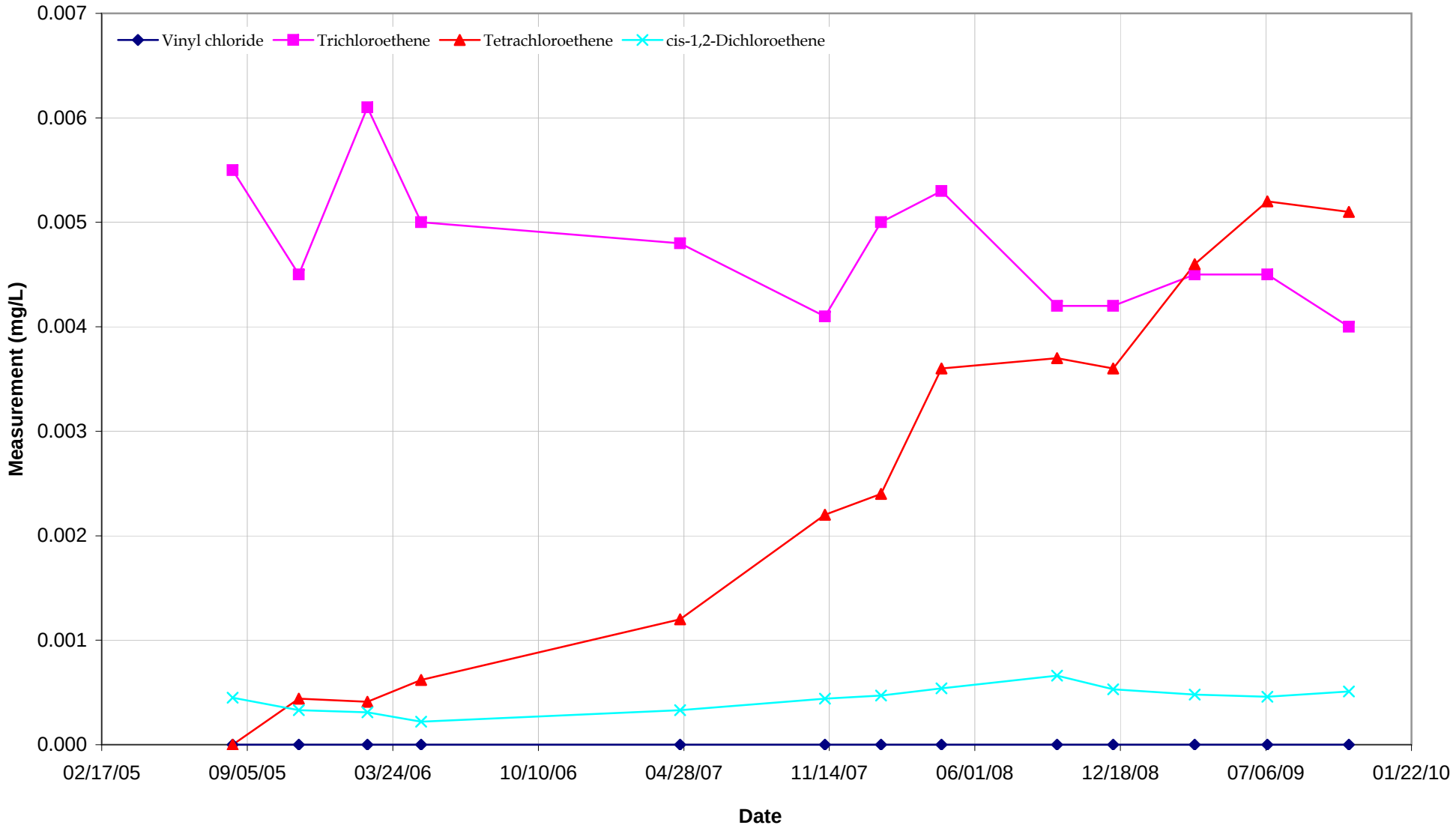

OVERBURDEN WELLS & PIZOMETERS OB-43S

Attica, Indiana

CRA 19190

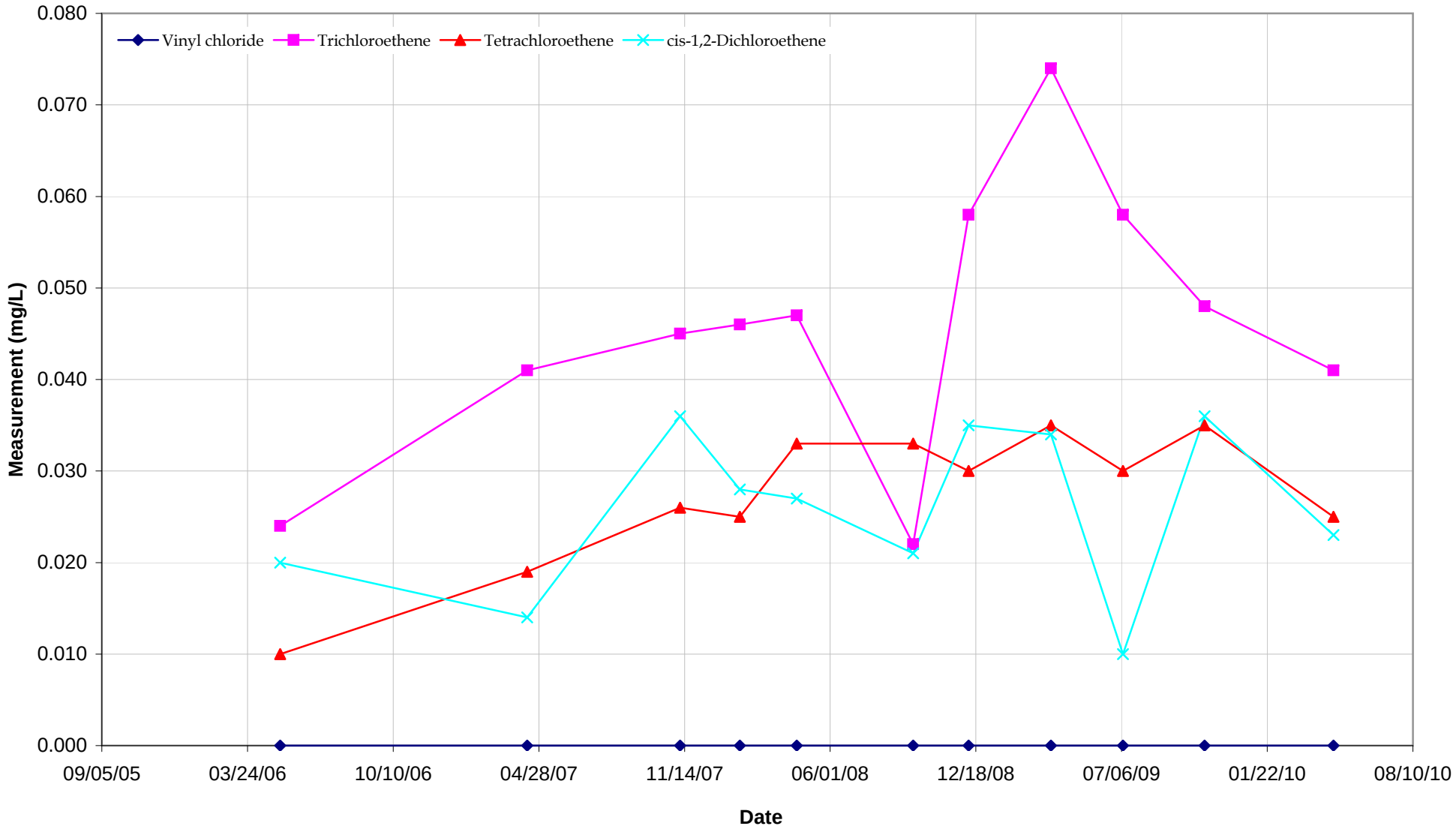

OVERBURDEN WELLS & PIZOMETERS OB-44

Attica, Indiana

CRA 19190

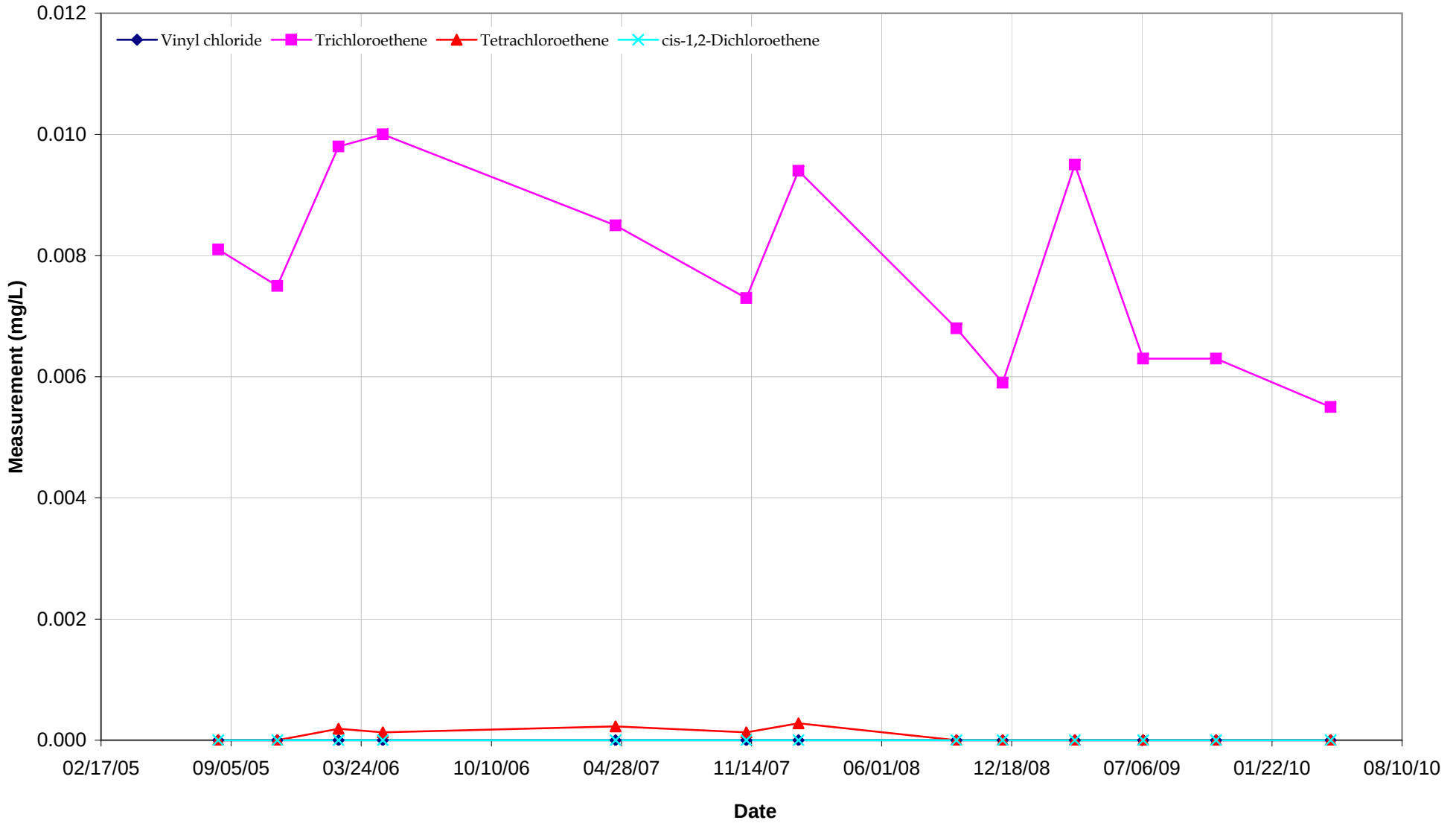

OVERBURDEN WELLS & PIZOMETERS OB-45S

Attica, Indiana

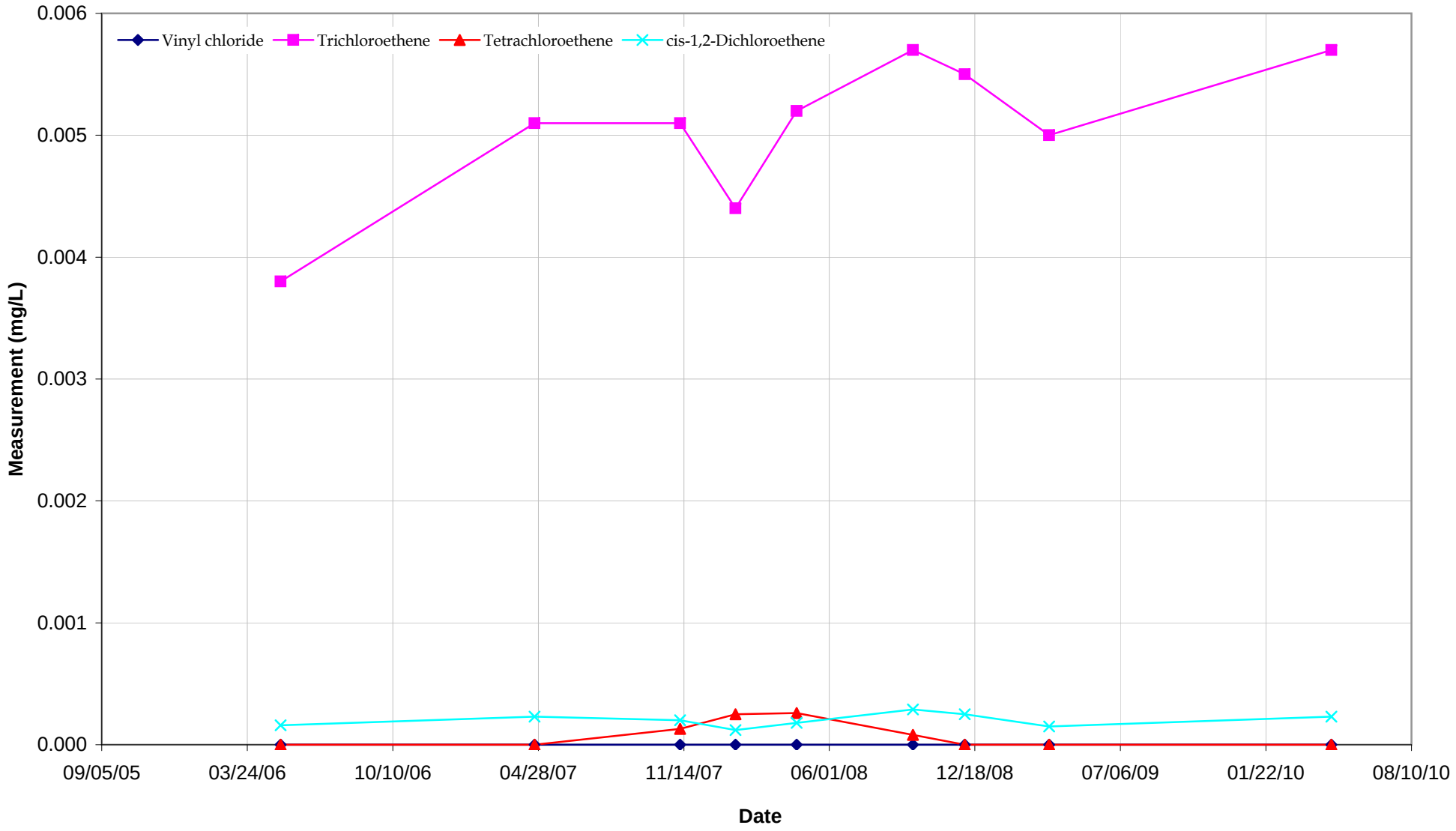

OVERBURDEN WELLS & PIZOMETERS OB-47D

Attica, Indiana

CRA 19190

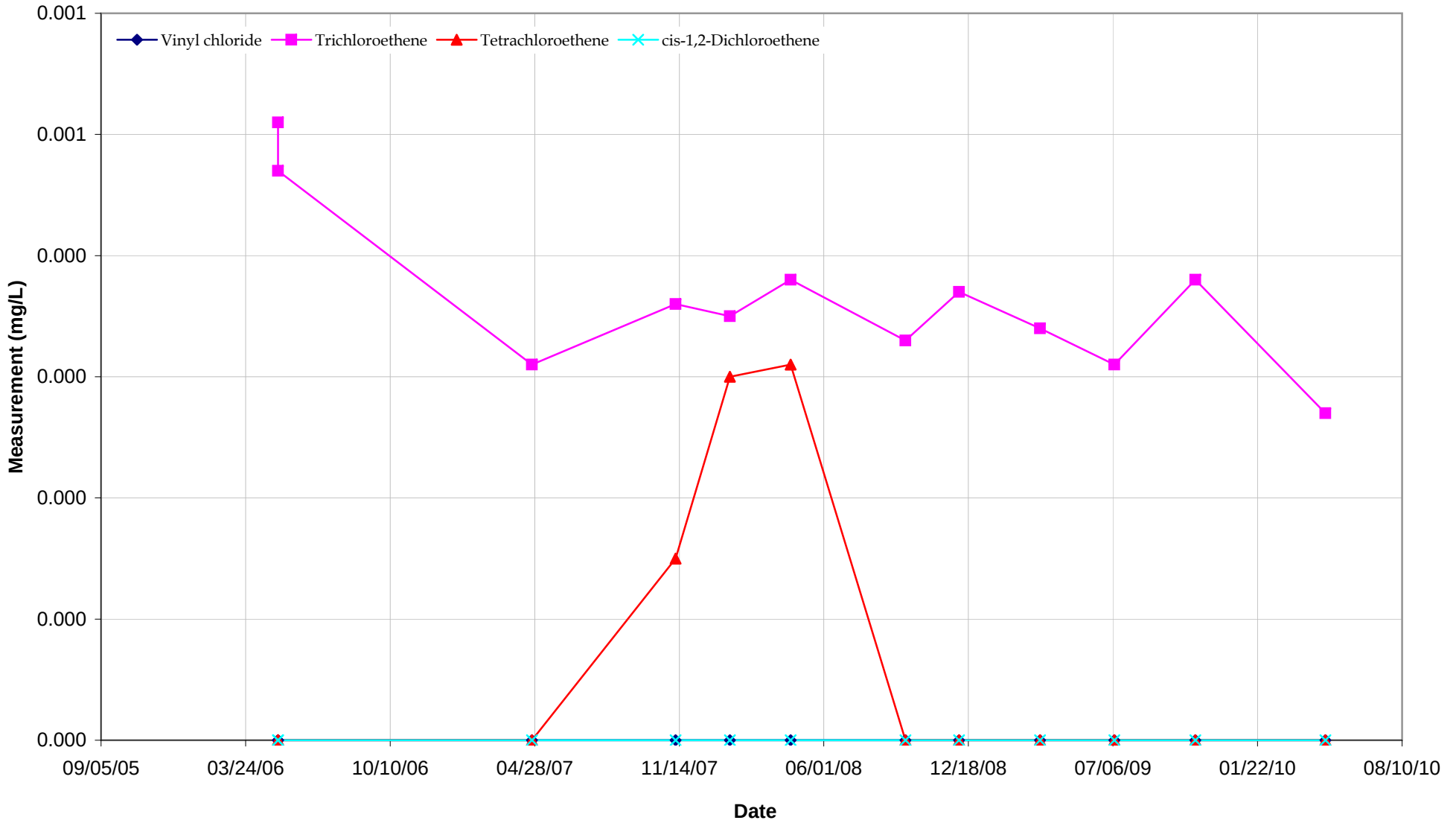

OVERBURDEN WELLS & PIZOMETERS OB-48D

Attica, Indiana

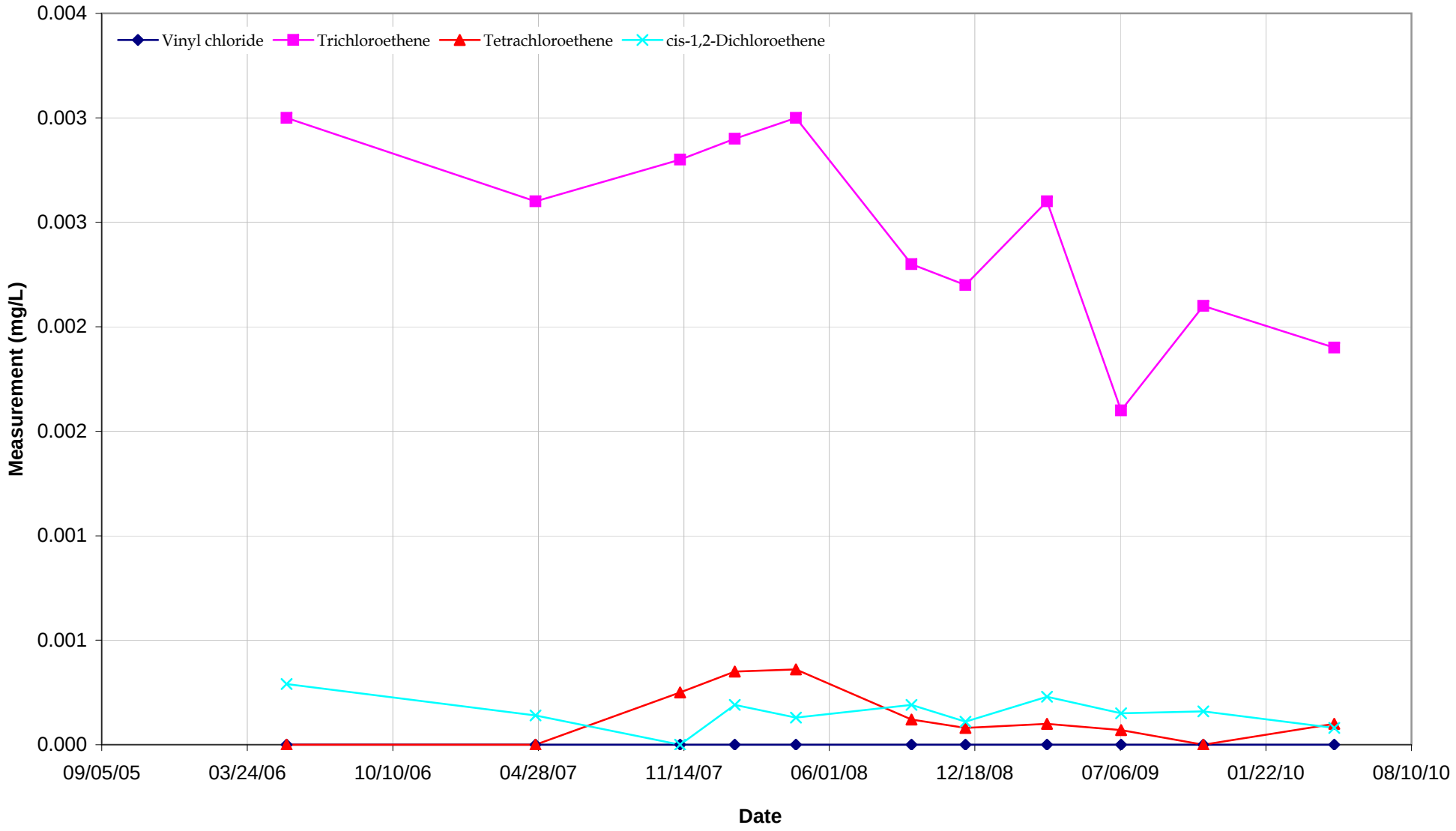

OVERBURDEN WELLS & PIZOMETERS OB-48S

Attica, Indiana

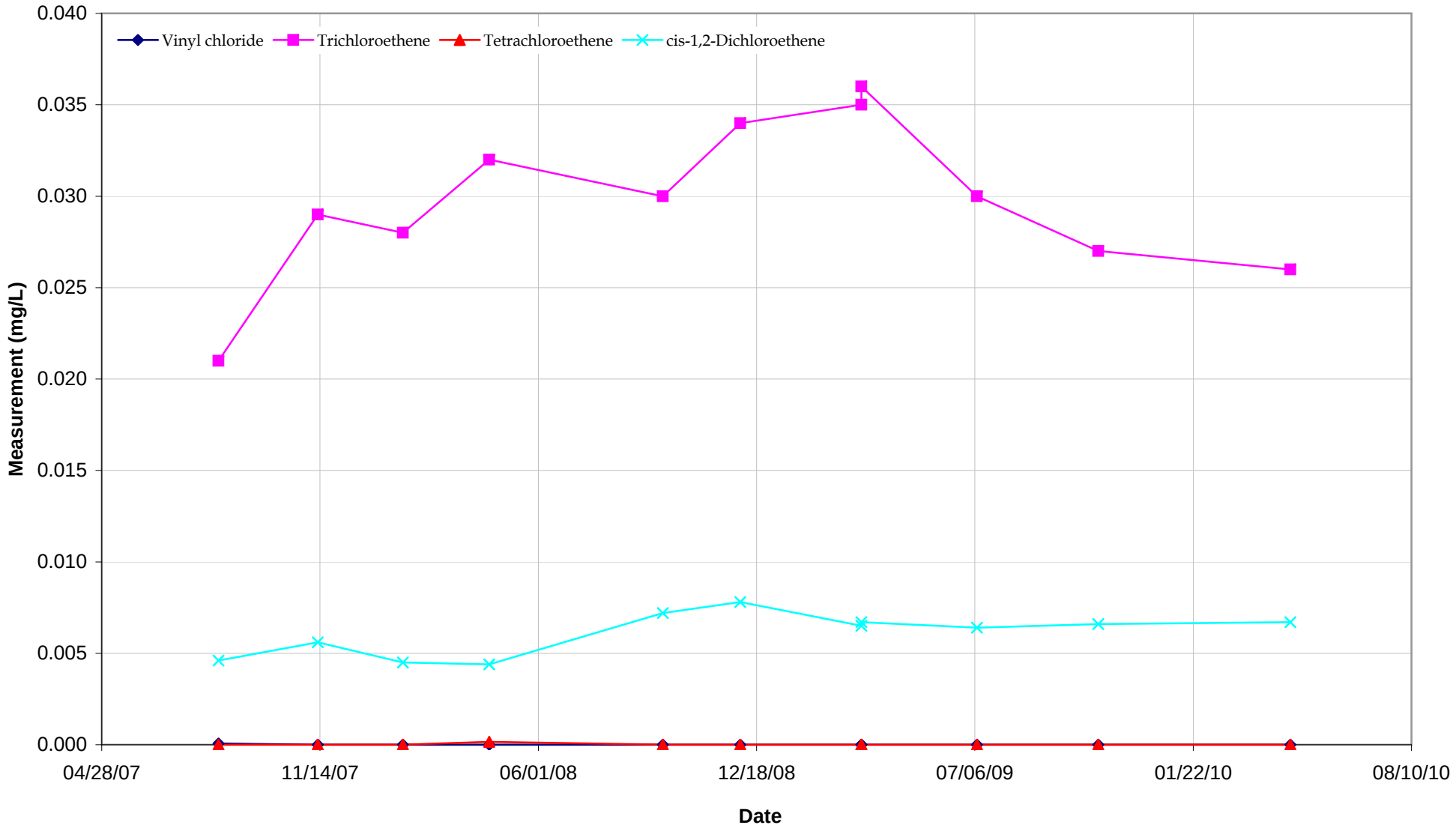

OVERBURDEN WELLS & PIZOMETERS OB-50

Attica, Indiana

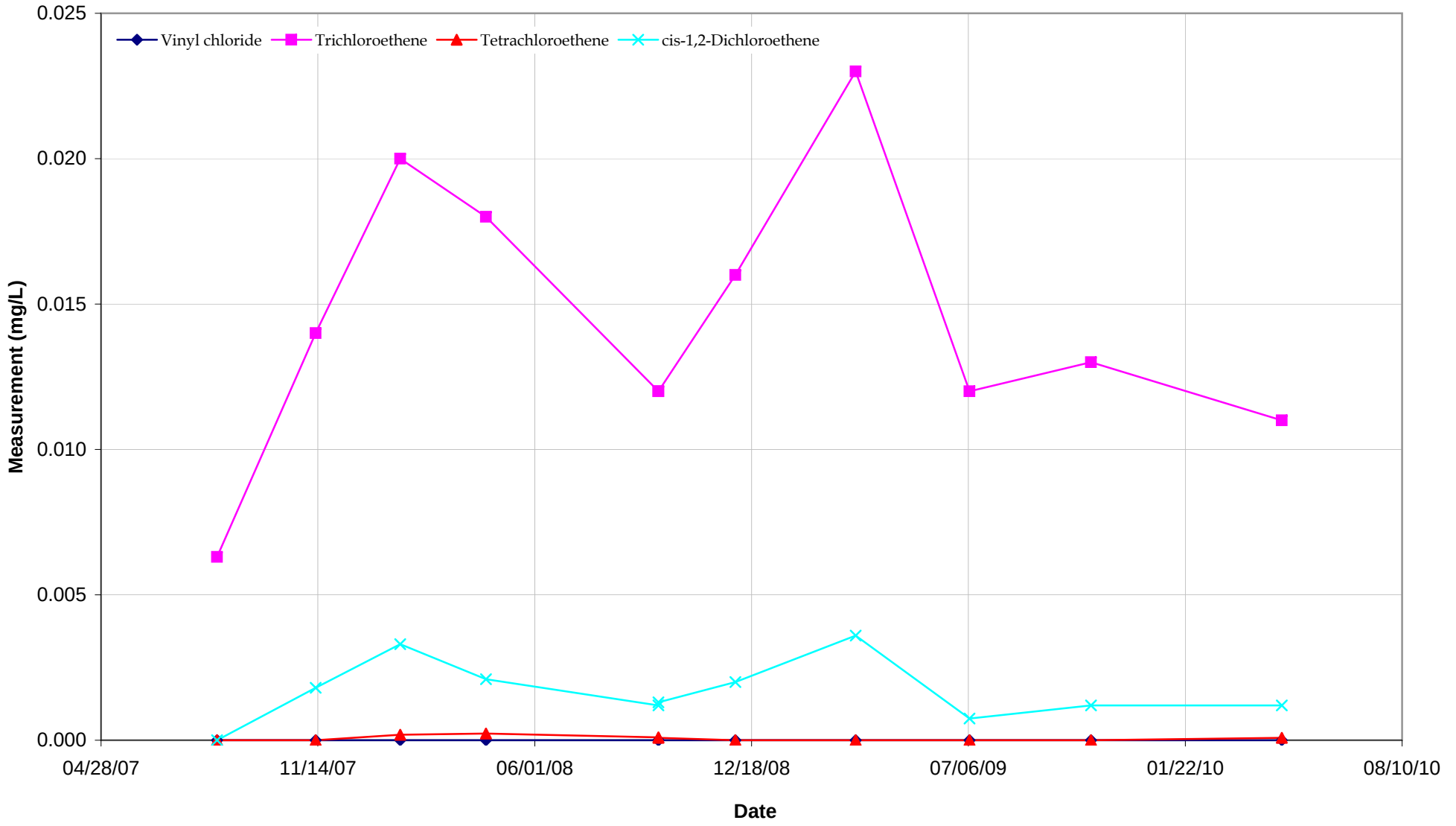

OVERBURDEN WELLS & PIZOMETERS OB-51

Attica, Indiana

CRA 19190

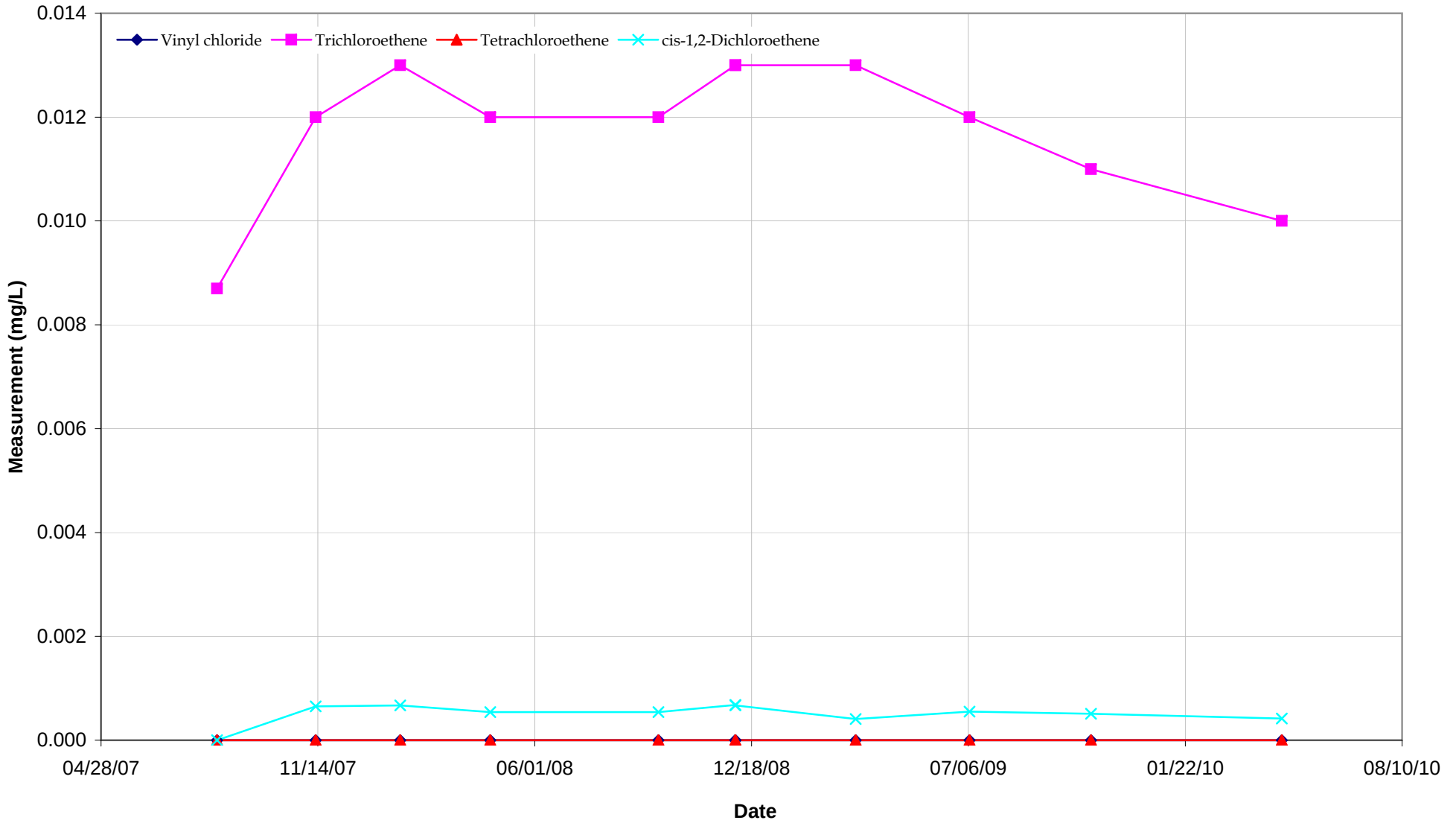

OVERBURDEN WELLS & PIZOMETERS OB-52

Attica, Indiana

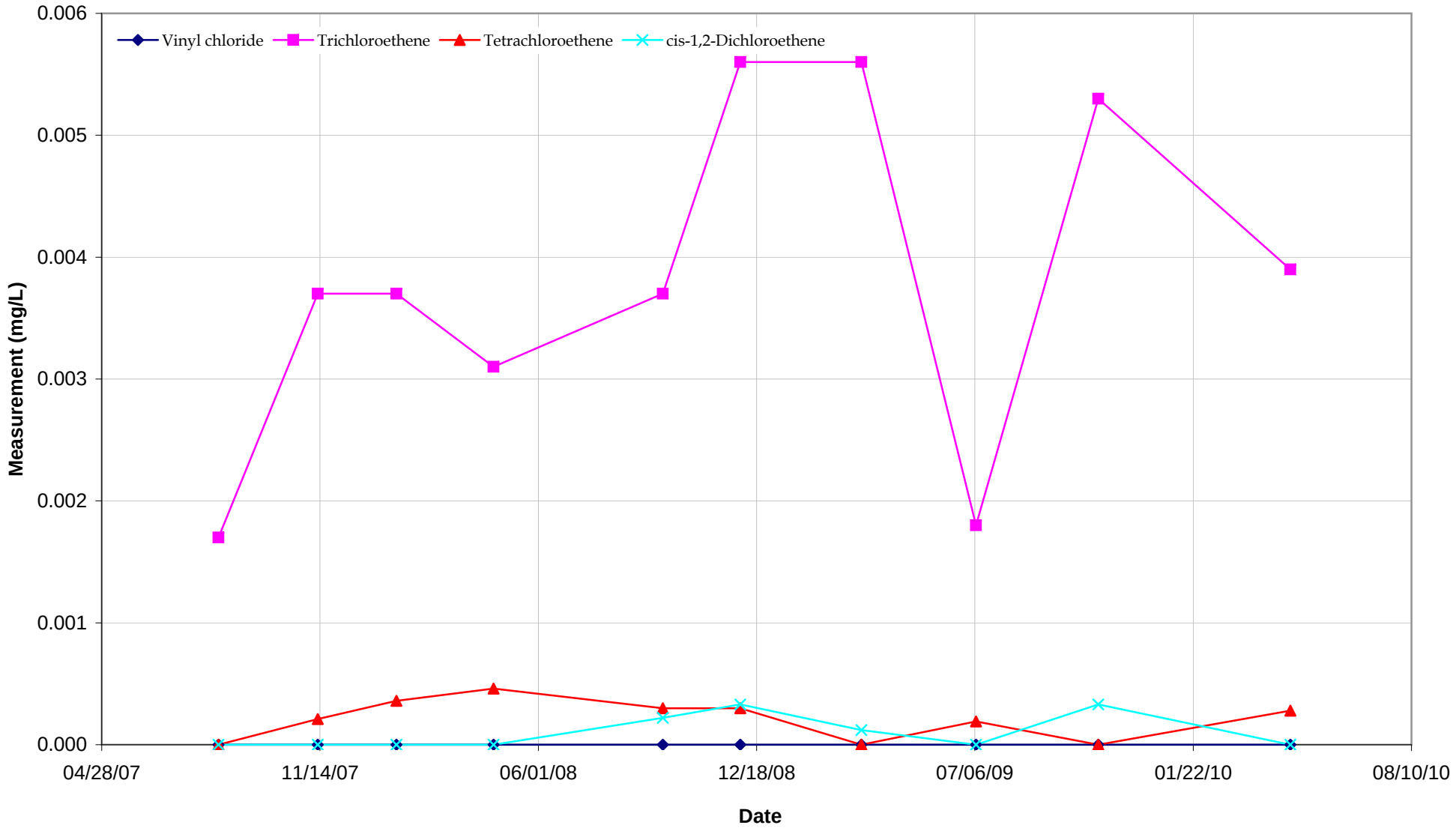

OVERBURDEN WELLS & PIZOMETERS OB-53

Attica, Indiana

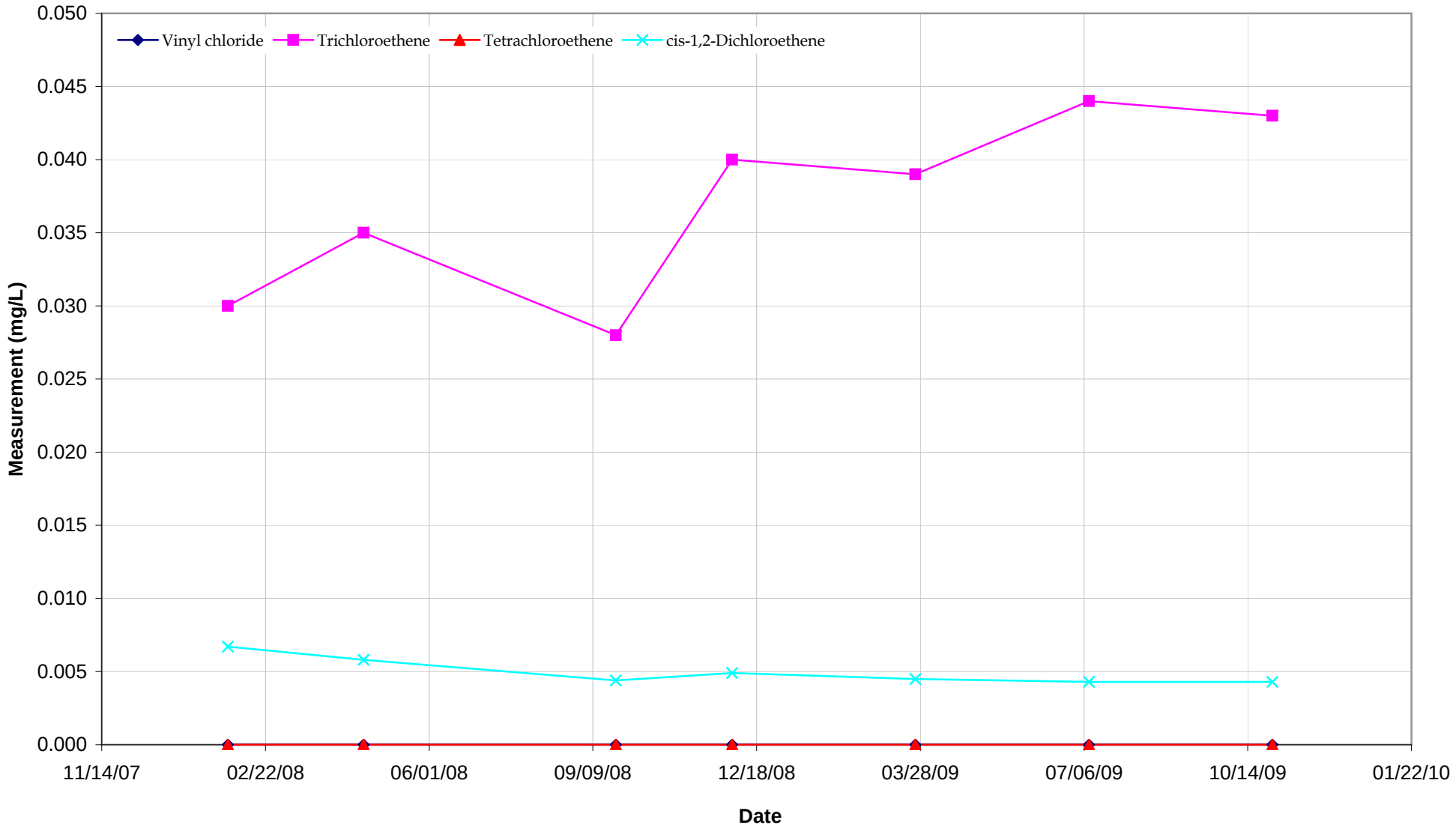

OVERBURDEN WELLS & PIZOMETERS OB-54

Attica, Indiana

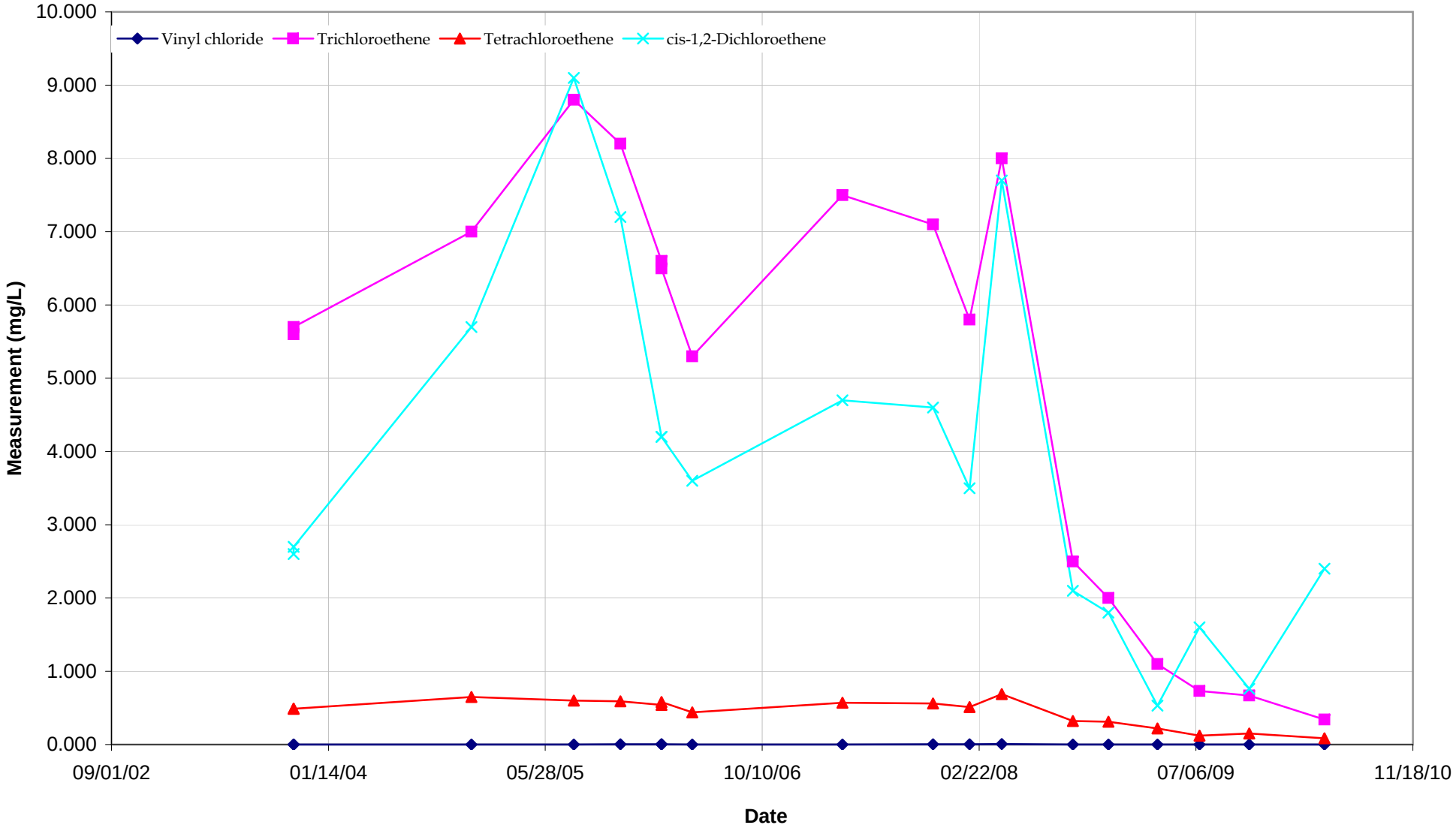

OVERBURDEN WELLS & PIZOMETERS PZ-04

Attica, Indiana

APPENDIX I

FINAL DESIGN AND SPECIFICATIONS

APPENDIX I-1

DESIGN PLANS AND PROJECT SPECIFICATIONS
GROUNDWATER EXTRACTION AND TREATMENT SYSTEM

DRAWING INDEX

DWG. Nº	REV. Nº	DATE	TITLE
CIVIL			
CI-01	3	10/12/10	ATTICA EXTRACTION WELLS SITE EXISTING FEATURES
CI-02	3	10/12/10	ATTICA EXTRACTION WELLS SITE PROPOSED FEATURES
CI-03	3	10/12/10	SOUTH EXTRACTION WELLS AND OUTLET PIPE PLANS AND PROFILES
CI-04	3	10/12/10	NORTH EXTRACTION WELL PLAN AND PROFILE
CI-05	3	10/12/10	CIVIL DETAILS
CI-06	3	10/12/10	EXTRACTION WELL DETAILS
FLOW SHEETS			
EF-01	4	10/12/10	LEGEND ENGINEERING FLOWSHEET
EF-02	4	10/12/10	ENGINEERING FLOWSHEET SOUTH EXTRACTION WELLS
EF-03	4	10/12/10	ENGINEERING FLOWSHEET SOUTH EXTRACTION WELLS
EF-04	4	10/12/10	ENGINEERING FLOWSHEET NORTH EXTRACTION WELLS
EF-05	4	10/12/10	ENGINEERING FLOWSHEET NORTH EXTRACTION WELLS
EF-06	4	10/12/10	ENGINEERING FLOWSHEET GWT FACILITY
STRUCTURAL			
ST-00	3	10/12/10	GENERAL NOTES
ST-01	3	10/12/10	TREATMENT BUILDING FOUNDATION AND FLOOR PLANS
ST-02	3	10/12/10	TREATMENT BUILDING SECTIONS & DETAILS
MECHANICAL			
ME-01	4	10/12/10	TREATMENT BUILDING PIPING PLAN
ME-02	1	10/12/10	TREATMENT BUILDING PIPING SECTIONS
ME-03	1	10/12/10	TREATMENT BUILDING PIPING SECTIONS
ME-04	4	10/12/10	TREATMENT BUILDING DETAILS
ELECTRICAL			
EL-01	4	10/12/10	ONE LINE DIAGRAM
EL-02	3	10/12/10	ELECTRICAL SITE PLAN
EL-03	3	10/12/10	TREATMENT BUILDING GROUNDING PLAN & DETAILS
EL-04	3	10/12/10	TREATMENT BUILDING LIGHTING PLAN & DETAILS
EL-05	3	10/12/10	TREATMENT BUILDING POWER PLAN
EL-06	3	10/12/10	TREATMENT BUILDING INSTRUMENT PLAN & DETAILS
EL-07	3	10/12/10	ELECTRICAL DETAILS
EL-08 SHT 1	3	10/12/10	TREATMENT BUILDING SCHEMATIC WIRING DIAGRAM
EL-08 SHT 2	3	10/12/10	TREATMENT BUILDING SCHEMATIC WIRING DIAGRAM
EL-09	3	10/12/10	TREATMENT BUILDING SCHEMATIC WIRING DIAGRAM
EL-10	3	10/12/10	TREATMENT BUILDING NETWORK ARCHITECTURE
EL-11	3	10/12/10	PLC CONTROL PANEL ARRANGEMENT AND BILL OF MATERIALS
EL-12 SHT. 1	3	10/12/10	PLC CONTROL PANEL POWER DISTRIBUTION DIAGRAM
EL-12 SHT. 2	3	10/12/10	PLC CONTROL PANEL POWER DISTRIBUTION DIAGRAM
EL-12 SHT. 3	3	10/12/10	PLC CONTROL PANEL ANALOG INPUT WIRING DIAGRAM
EL-12 SHT. 4	3	10/12/10	PLC CONTROL PANEL ANALOG INPUT WIRING DIAGRAM
EL-12 SHT. 5	3	10/12/10	PLC CONTROL PANEL ANALOG INPUT WIRING DIAGRAM
EL-12 SHT. 6	3	10/12/10	PLC CONTROL PANEL ANALOG INPUT WIRING DIAGRAM
EL-12 SHT. 7	3	10/12/10	PLC CONTROL PANEL ANALOG INPUT WIRING DIAGRAM
EL-12 SHT. 8	3	10/12/10	PLC CONTROL PANEL ANALOG INPUT WIRING DIAGRAM
EL-12 SHT. 9	3	10/12/10	PLC CONTROL PANEL ANALOG OUTPUT WIRING DIAGRAM
EL-12 SHT. 10	3	10/12/10	PLC CONTROL PANEL DIGITAL INPUT WIRING DIAGRAM
EL-12 SHT. 11	3	10/12/10	PLC CONTROL PANEL DIGITAL INPUT WIRING DIAGRAM
EL-12 SHT. 12	3	10/12/10	PLC CONTROL PANEL RELAY OUTPUT WIRING DIAGRAM
EL-12 SHT. 13	3	10/12/10	PLC CONTROL PANEL RELAY OUTPUT WIRING DIAGRAM

RADIO MATERIALS
ATTICA, INDIANA

GROUNDWATER REMEDIATION SYSTEM

FINAL 100% DESIGN

19190-10(041)

CONESTOGA-ROVERS & ASSOCIATES

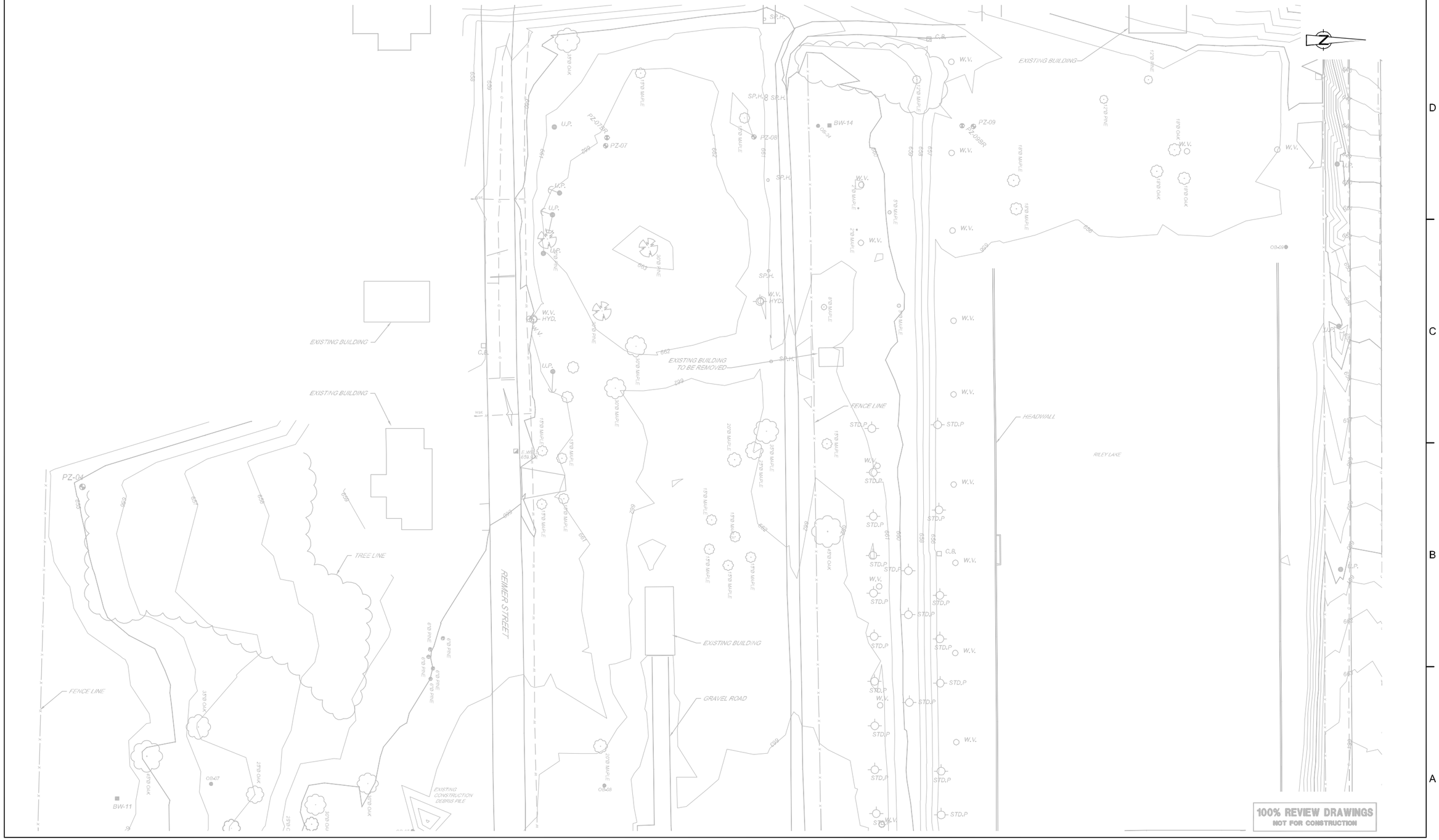

SCALE VERIFICATION: THIS BAR MEASURES 1" ON ORIGINAL. ADJUST SCALE ACCORDINGLY.

No	Revision	Date	Initial
3	FINAL 100% DESIGN	10/12/10	JJ
2	REISSUED 95% SUBMITTAL	02/01/10	JJ
1	95% SUBMITTAL	12/30/09	JJ

WARNING: ALTERING THIS DOCUMENT IS
IN VIOLATION OF THE NEW YORK STATE
EDUCATION LAW EXCEPTING AS PROVIDED
IN SECTION 7209, PART 2 OF THE LAW.

RADIO MATERIALS
ATTICA, INDIANA

GROUNDWATER REMEDIATION SYSTEM

ATTICA EXTRACTION WELLS SITE
EXISTING FEATURES

CONESTOGA-ROVERS & ASSOCIATES

Source Reference:			Date: DECEMBER 2009
Project Manager: S. WARNER	Reviewed By: L. LEMUNYAN	Designed By: A. AIGNER	Drawn By: JPM / CRR
Scale: As 1"=30'	Project No: 19190-10	Report No: 041	Drawing No: CI-01

19190-10(041)CI-BU002 APR 19/2010

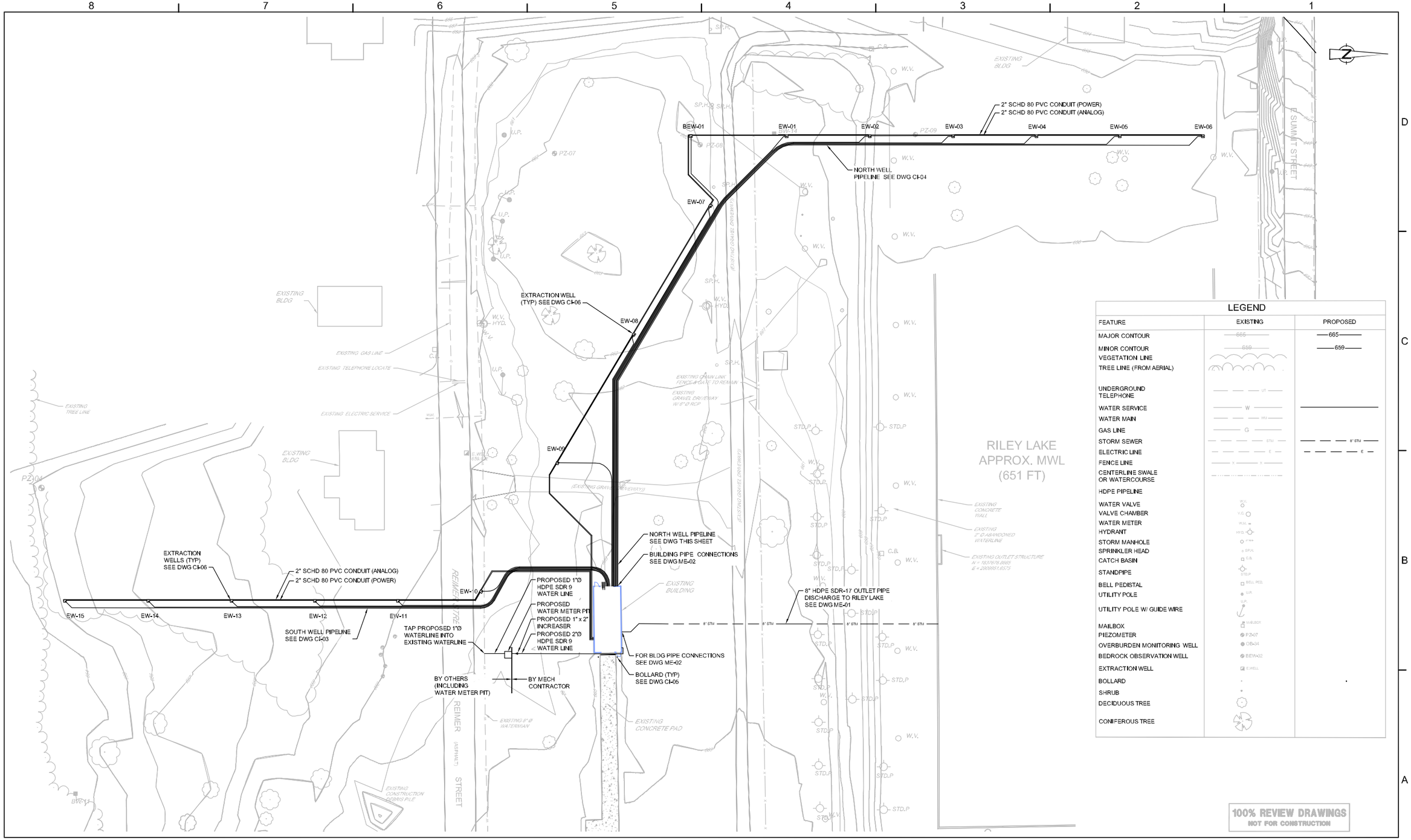

LEGEND

FEATURE	EXISTING	PROPOSED
MAJOR CONTOUR	665	665
MINOR CONTOUR	659	659
VEGETATION LINE		
TREE LINE (FROM AERIAL)		
UNDERGROUND TELEPHONE	UT	
WATER SERVICE	W	
WATER MAIN	WM	
GAS LINE	G	
STORM SEWER	STM	8" STM
ELECTRIC LINE	E	E
FENCE LINE	X	
CENTERLINE SWALE OR WATERCOURSE		
HDPE PIPELINE		
WATER VALVE	W.V.	
VALVE CHAMBER	V.C.	
WATER METER	W.M.	
HYDRANT	HYD.	
STORM MANHOLE	ST'M	
SPRINKLER HEAD	SP.H.	
CATCH BASIN	C.B.	
STANDPIPE	STD.P	
BELL PEDISTAL	BELL PED.	
UTILITY POLE	U.P.	
UTILITY POLE W/ GUIDE WIRE	U.P.	
MAILBOX	MAILBOX	
PIEZOMETER	PZ-07	
OVERBURDEN MONITORING WELL	OB-34	
BEDROCK OBSERVATION WELL	BEW-02	
EXTRACTION WELL	E.WELL	
BOLLARD		
SHRUB		
DECIDUOUS TREE		
CONIFEROUS TREE		

100% REVIEW DRAWINGS
NOT FOR CONSTRUCTION

SCALE VERIFICATION: THIS BAR MEASURES 1" ON ORIGINAL. ADJUST SCALE ACCORDINGLY.

No	Revision	Date	Initial
3	FINAL 100% DESIGN	10/12/10	JJ
2	REISSUED 95% SUBMITTAL	02/01/10	JJ
1	95% SUBMITTAL	12/30/09	JJ

WARNING: ALTERING THIS DOCUMENT IS IN VIOLATION OF THE NEW YORK STATE EDUCATION LAW EXCEPTING AS PROVIDED IN SECTION 7209, PART 2 OF THE LAW.

RADIO MATERIALS
ATTICA, INDIANA

GROUNDWATER REMEDIATION SYSTEM

ATTICA EXTRACTION WELLS SITE
PROPOSED FEATURES

CONESTOGA-ROVERS & ASSOCIATES

Source Reference			Date: DECEMBER 2009
Project Manager: S. WANNER	Reviewed By: L. LEMUNYAN	Designed By: A. AIGNER	Drawn By: JPM / CRR
Scale: As 1"=30'	Project No: 19190-10	Report No: 041	Drawing No: CI-02

19190-10(041)CI-BU003 OCT 11/2010

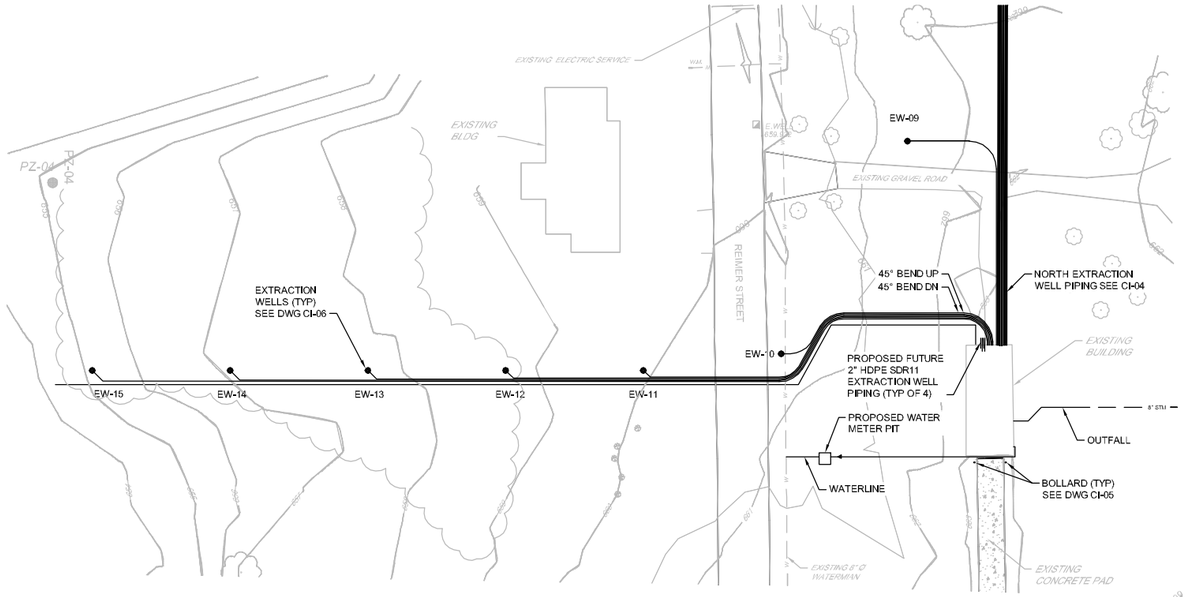

SOUTH EXTRACTION WELL PLAN

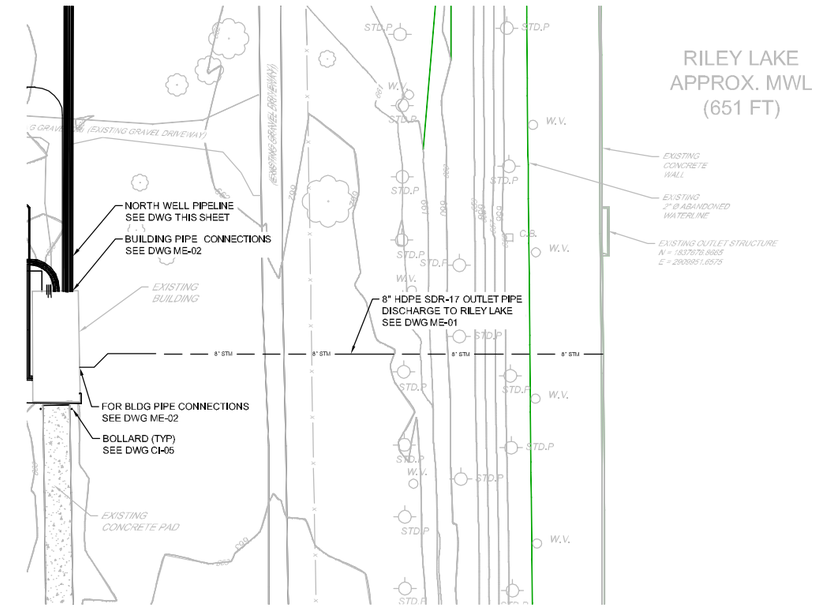

OUTLET PIPE PLAN

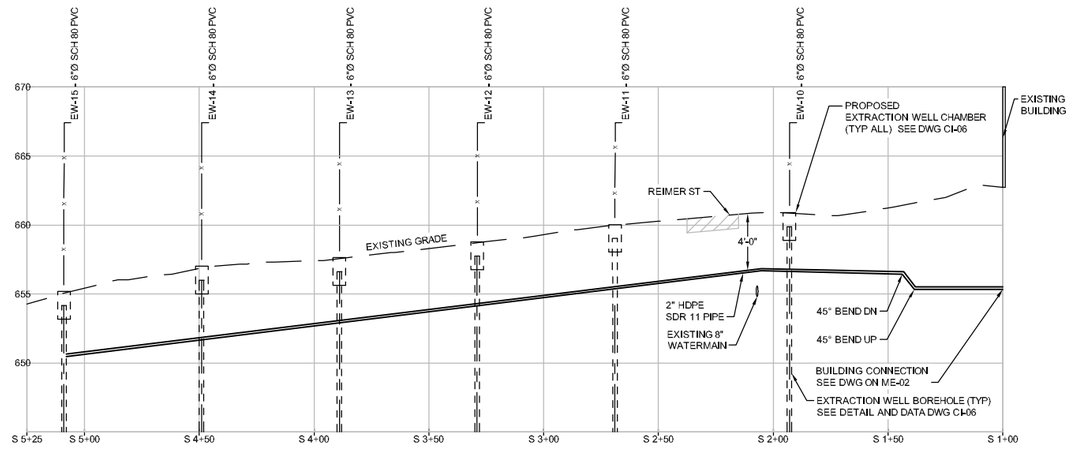

SOUTH EXTRACTION WELL PROFILE

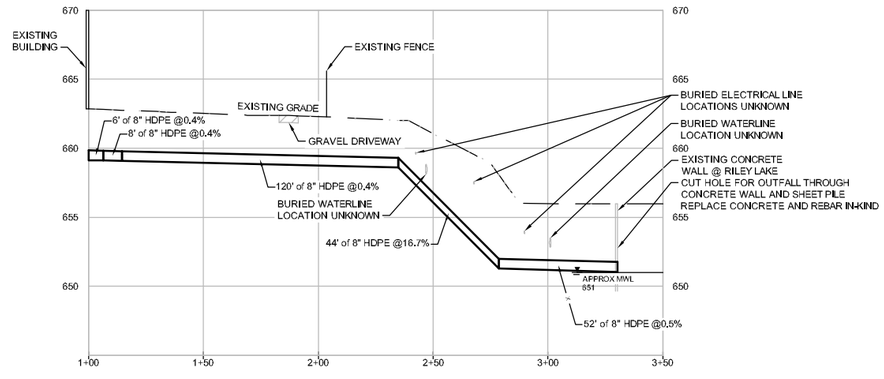

OUTLET PIPE PROFILE

100% REVIEW DRAWINGS
NOT FOR CONSTRUCTION

SCALE VERIFICATION: THIS BAR MEASURES 1" ON ORIGINAL. ADJUST SCALE ACCORDINGLY.

No	Revision	Date	Initial
3	FINAL 100% DESIGN	10/12/10	JJ
2	REISSUED 95% SUBMITTAL	02/01/10	JJ
1	95% SUBMITTAL	12/30/09	JJ

RADIO MATERIALS
ATTICA, INDIANA

GROUNDWATER REMEDIATION SYSTEM

SOUTH EXTRACTION WELLS AND
OUTLET PIPE PLANS AND PROFILES

CONESTOGA-ROVERS & ASSOCIATES

Source Reference:			Dates: DECEMBER 2009
Project Manager: S. WANNER	Reviewed By: L. LEMUNYAN	Designed By: A. AIGNER	Drawn By: JPM / CRR
Scale: 1"=30' 1"=5'	Project No: 19190-10	Report No: 041	Drawing No: CI-03

19190-10(041)CI-BU001 APR 19/2010



NORTH EXTRACTION WELL PLAN

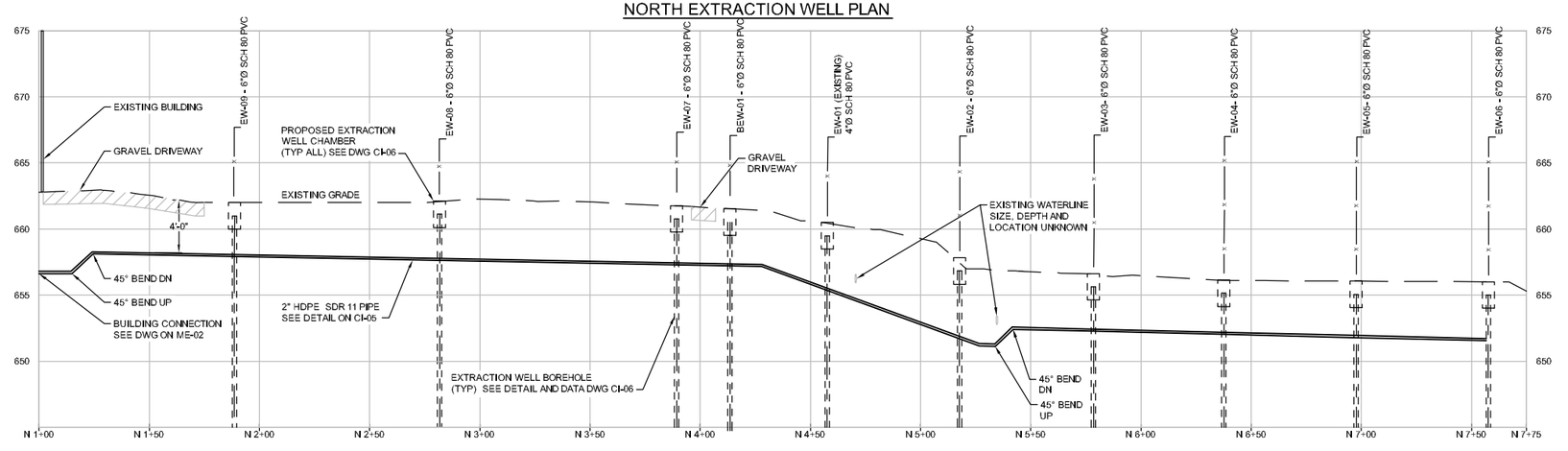

NORTH EXTRACTION WELL PROFILE

100% REVIEW DRAWINGS
NOT FOR CONSTRUCTION

SCALE VERIFICATION: THIS BAR MEASURES 1" ON ORIGINAL. ADJUST SCALE ACCORDINGLY.

No	Revision	Date	Initial
3	FINAL 100% DESIGN	10/12/10	JJ
2	REISSUED 95% SUBMITTAL	02/01/10	JJ
1	95% SUBMITTAL	12/30/09	JJ

RADIO MATERIALS
ATTICA, INDIANA

GROUNDWATER REMEDIATION SYSTEM

NORTH EXTRACTION WELL
PLAN AND PROFILE

CONESTOGA-ROVERS & ASSOCIATES

Source Reference(s)			Dates: DECEMBER 2009
Project Manager: S. WANNER	Reviewed By: L. LEMUNYAN	Designed By: A. AIGNER	Drawn By: JPM / CRR
Scale: 1"=30' 1"=5'	Project No: 19190-10	Report No: 041	Drawing No: CI-04

19190-10(041)CI-BU001 APR 19/2010

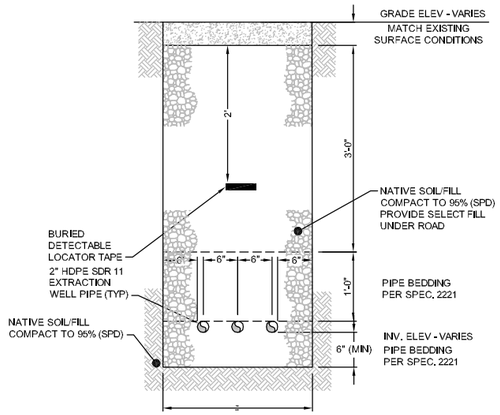

TRENCH DETAIL

SCALE: 1" = 1'-0"

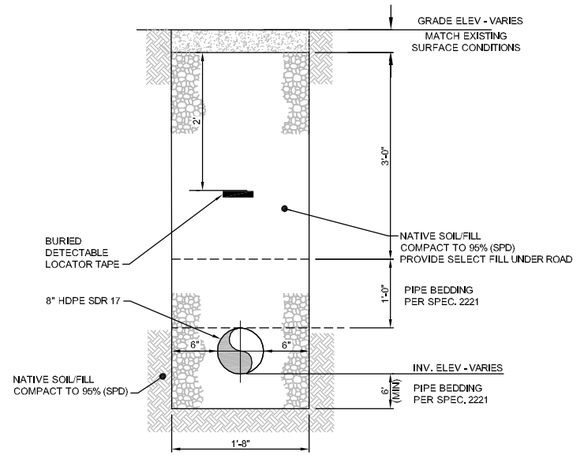

OUTFALL TRENCH DETAIL

SCALE: 1" = 1'-0"

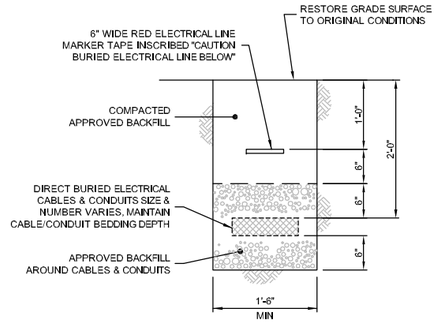

TYPICAL CABLE/CONDUIT TRENCH

SCALE: NTS

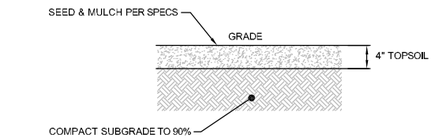

TYPICAL TURF REPLACEMENT

SCALE: 1" = 1'-0"

USE TO REPLACE TURF DISTRIBUTED FOR CONSTRUCTION

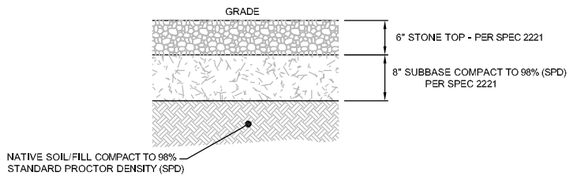

GRAVEL PAVEMENT

SCALE: 1" = 1'-0"

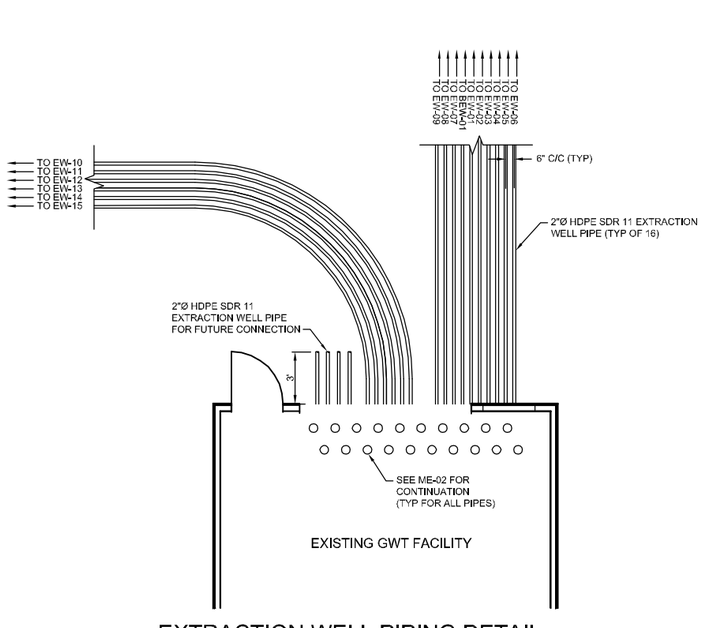

EXTRACTION WELL PIPING DETAIL

SCALE: 1/4" = 1'-0"

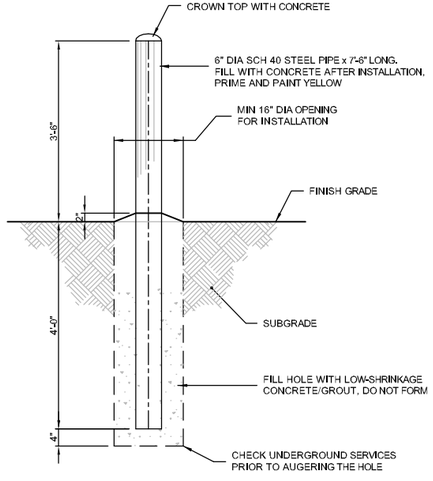

TYPICAL BOLLARD

SCALE: 3/4" = 1'-0"

NOTES

1. REFER TO MECHANICAL DRAWINGS FOR VALVE AND PIPING REQUIREMENTS.
2. REFER TO ELECTRICAL DRAWINGS FOR CONDUIT AND PULL BOX REQUIREMENTS.

100% REVIEW DRAWINGS
NOT FOR CONSTRUCTION

SCALE VERIFICATION: THIS BAR MEASURES 1" ON ORIGINAL. ADJUST SCALE ACCORDINGLY.

No	Revision	Date	Initial
3	FINAL 100% DESIGN	10/12/10	JJ
2	REISSUED 95% SUBMITTAL	02/01/10	JJ
1	95% SUBMITTAL	12/30/09	JJ

WARNING: ALTERING THIS DOCUMENT IS
IN VIOLATION OF THE NEW YORK STATE
EDUCATION LAW EXCEPTING AS PROVIDED
IN SECTION 7209, PART 2 OF THE LAW.

RADIO MATERIALS
ATTICA, INDIANA

GROUNDWATER REMEDIATION SYSTEM

CIVIL DETAILS

CONESTOGA-ROVERS & ASSOCIATES

Source Reference:			Date: DECEMBER 2009
Project Manager: S. WARNER	Reviewed By: L. LEMUNYAN	Designed By: A. AIGNER	Drawn By: JPM / CRR
Scale: AS SHOWN	Project No: 19190-10	Report No: 041	Drawing No: CI-05

19190-10(041)CI-B0006 OCT 11/2010

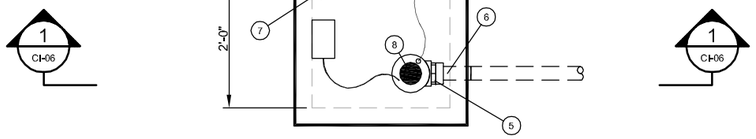

EXTRACTION WELL VAULT - TOP PLAN
1"=1'-0"

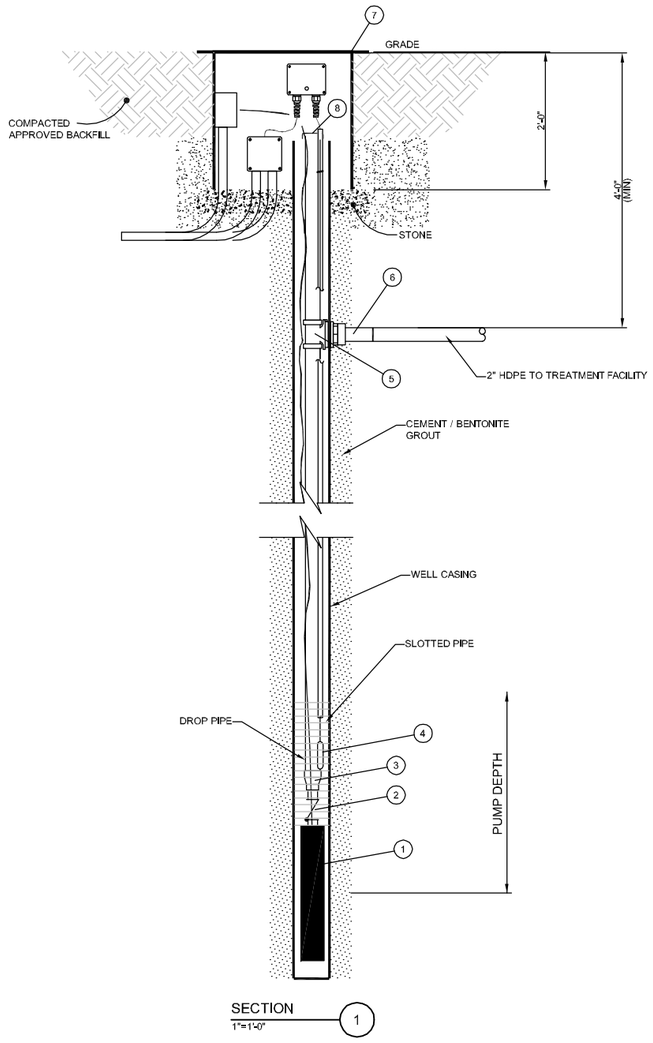

SECTION
1"=1'-0"

LEGEND

1. SUBMERSIBLE PUMP
2. CHECK VALVE
3. 2 X 1¼ REDUCER
4. LEVEL TRANSMITTER
5. PITLESS ADAPTER (NPT)
6. POLYETHYLENE ADAPTER
7. LOCKING MONITORING WELL VAULT MODEL # 1024244 (24"X24"X24")
8. WELL CAP

NOTES

1. REFER TO DWG CI-05 FOR TRENCH AND RESTORATION DETAILS.
2. REFER TO DWG CI-05 FOR BOLLARD DETAILS.

EXTRACTION WELL DATA

WELL NUMBER	ESTIMATED TOP OF CASING ELEVATION AMSL (FEET)	APPROXIMATE GROUND SURFACE ELEVATION AMSL (FEET)	CASING/SCREEN MATERIAL	WELL DIAMETER (INCHES)	BOREHOLE DIAMETER (INCHES)	ESTIMATED DEPTH TO BEDROCK (FEET) /AMSL FEET	ESTIMATED TOTAL WELL DEPTH (FEET) /AMSL FEET	ESTIMATED SCREEN LENGTH (FEET)	ESTIMATED SCREEN INTERVAL (FEET) /AMSL FEET	PUMP MODEL MFG	PUMP INLET DEPTH(FEET) /AMSL FEET	RISER PIPE DIAMETER (INCHES)
BEW-01	654	657	C.S	4	10	65.0/592	116 / 541	35	81-116/576-541	25E8	575	4
EW-01 (Existing)	662	660	Sch 80 PVC	4	12	68.0/592.7	69.0/591.7	5	64-69/596.7-591.7	10E8	593	4
EW-02	654	656	Sch 80 PVC	6	12	65.0/591.0	69.0/587.0	5	60-65/596-591	10E8	590	6
EW-03	654	656	Sch 80 PVC	6	12	65.0/591.0	69.0/587.0	5	60-65/596-591	10E8	590	6
EW-04	654	656	Sch 80 PVC	6	12	65.0/591.0	69.0/587.0	5	60-65/596-591	10E8	590	6
EW-05	654	656	Sch 80 PVC	6	12	65.0/591.0	69.0/587.0	5	60-65/596-591	10E8	590	6
EW-06	654	656	Sch 80 PVC	6	12	65.0/591.0	69.0/587.0	5	60-65/596-591	10E8	590	6
EW-07	659	661	Sch 80 PVC	6	12	68.0/593.0	72.0/589.0	5	63-68/598-593	10E8	592	6
EW-08	660	662	Sch 80 PVC	6	12	69.0/593.0	73.0/589.0	5	64-69/598-593	10E8	592	6
EW-09	659	661	Sch 80 PVC	6	12	67.0/594.0	71.0/590.0	5	62-67/599-594	10E8	593	6
EW-10	658	660	Sch 80 PVC	6	12	64.0/596.0	68.0/592.0	5	59-64/601-596	10E8	595	6
EW-11	658	660	Sch 80 PVC	6	12	63.0/597.0	67.0/593.0	5	58-63/602-597	10E8	596	6
EW-12	657	659	Sch 80 PVC	6	12	60.0/599.0	64.0/595.0	5	55-60/604-599	10E8	598	6
EW-13	656	658	Sch 80 PVC	6	12	57.0/601.0	61.0/597.0	5	52-57/606-601	10E8	600	6
EW-14	655	657	Sch 80 PVC	6	12	54.0/603.0	58.0/599.0	2.5	51.5-54/605.5-603	10E5	602	6
EW-15	653	655	Sch 80 PVC	6	12	50.0/605	54.0/601.0	2.5	47.5-50/607.5-605	10E5	604	6

100% REVIEW DRAWINGS
NOT FOR CONSTRUCTION

SCALE VERIFICATION: THIS BAR MEASURES 1" ON ORIGINAL. ADJUST SCALE ACCORDINGLY.

No	Revision	Date	Initial
3	FINAL 100% DESIGN	10/12/10	JJ
2	REISSUED 95% SUBMITTAL	02/01/10	JJ
1	95% SUBMITTAL	12/30/09	JJ

RADIO MATERIALS
ATTICA, INDIANA

GROUNDWATER REMEDIATION SYSTEM

EXTRACTION WELL DETAILS

CONESTOGA-ROVERS & ASSOCIATES

Source Reference:			Date: DECEMBER 2009
Project Manager: S. WANNER	Reviewed By: J. JOY	Designed By: A. AIGNER	Drawn By: B. SUCHAN
Scale: AS NOTED	Project No: 19190-10	Report No: 041	Drawing No: CI-06

19190-10(041)CI-BU012 OCT 11/2010

PROCESS / INSTRUMENT LINES

- MAIN PROCESS LINE
- SECONDARY PROCESS LINE
- UNDEFINED SIGNAL
- PNEUMATIC SIGNAL
- ELECTRICAL SIGNAL
- CAPILLARY TUBE, FILLED SYSTEM
- ELECTROMAGNETIC OR SONIC SIGNAL (GUIDED)
- ELECTROMAGNETIC OR SONIC SIGNAL (NOT GUIDED)
- INTERNAL SYSTEM LINK
- HYDRAULIC SIGNAL
- MECHANICAL LINK
- ELECTRICAL BINARY SIGNAL
- OFF PAGE CONNECTOR (TO / FROM SHEET No.)
- UTILITY IN/OUT (UTILITY)
- HARDWIRED INTERLOCK LOGIC (-1,2,3...IS OPTIONAL REFERENCE TO INTERLOCK DETAIL DESCRIPTION) (2 / 1)

VALVE SYMBOLS

- BALL VALVE (BA- *)
- BUTTERFLY VALVE (BU- *)
- CHECK VALVE (CH- *)
- GATE VALVE (GA- *)
- GLOBE VALVE (GL- *)
- THREE WAY VALVE (FAIL OPEN TO PATH A-C) (A, B, C)
- FOUR WAY VALVE (FAIL OPEN TO PATH A-C AND B-D) (A, B, C, D)
- DAMPER OR LOUVER

GENERAL INSTRUMENT SYMBOLS

- LOCALLY MOUNTED INSTRUMENTS
- PRIMARY PANEL MOUNTED INSTRUMENTS
- AUXILARY PANEL MOUNTED INSTRUMENTS WHERE x = PANEL No. WHEN MORE THAN ONE PANEL IS PRESENT (IPx)
- BEHIND BOARD MOUNTED INSTRUMENTS
- INSTRUMENTS SHARING COMMON HOUSING
- IN LINE INSTRUMENTS AS INDENTIFIED
- SIGNAL CONVERTER (INPUT/OUTPUT) (XY)
  - * E - VOLTAGE, I - CURRENT
  - P - PNEUMATIC, B - BINARY (MODBUS, RS232...)
- PILOT LIGHT (COLOR)
  - A = AMBER, B = BLUE, C = CLEAR
  - G = GREEN, R = RED
  - W = WHITE, Y = YELLOW

DISTRIBUTED CONTROL / SHARED DISPLAY INSTRUMENTS

- INDICATOR/CONTROLLER/RECORDER OR ALARM POINTS - USUALLY USED TO INDICATE VIDEO DISPLAY (DCS OR HMI CONFIGURATIONS) * NORMALLY ACCESSIBLE TO OPERATOR
- NORMALLY BLIND OPERATION * NOT NORMALLY ACCESSIBLE TO OPERATOR
- DISTRIBUTED CONTROL INTERCONNECTING LOGIC CONTROLLER OR PLC WITH BINARY OR SEQUENTIAL LOGIC FUNCTIONS. * NORMALLY ACCESSIBLE TO OPERATOR

- NORMALLY BLIND OPERATION * NOT NORMALLY ACCESSIBLE TO OPERATOR
- INTERLOCK LOGIC IN CONTROLLER OR PLC WHERE: - 1,2,3.....IS OPTIONAL REFERENCE TO INTERLOCK DETAIL DESCRIPTION - x = PLC No. WHEN MORE THAN ONE PLC IS PRESENT IN THE SYSTEM (1 / PLCx)

MISCELLANEOUS SYMBOLS

- REDUCER
- FLEXIBLE PIPE EXPANSION JOINT
- BLIND FLANGE
- HOSE CONNECTION
- SCREWED CAP, CLEANOUT
- Y-LINE STRAINER
- SPECIFICATION CHANGE
- FUNNEL DRAIN
- STATIC MIXER
- FILTER/REGULATOR/LUBRICATOR
- ANNUNCIATOR HORN
- FILTER/REGULATOR
- EQUIPMENT INSULATED WITH X" OF INSULATION (X")
- RESET FOR LATCH-TYPE ACTUATOR (R)
- OPEN VENT TO ATMOSPHERE (VENT)
- INLINE BLANK
- RESTRICTION ORIFICE
- AIR EJECTOR
- TRAP (T)
- PULSATION DAMPER (T)
- BLOCK & BLEED ASSEMBLY (BB)
- TIE POINT TO EXISTING SYSTEM (TP / 1)
- DRAIN (FLOOR, SEWER, ETC.)
- FLOW STRAIGHTENING VANE
- SPECIALITY PART (SP / 4)
- AIR VENT, AUTOMATIC (AV)
- SLUICE GATES
- AIR FILTER

SELF-ACTUATED REGULATORS, VALVES, AND OTHER DEVICES

- PRESSURE RELIEF VALVE
- VACUUM RELIEF VALVE
- PRESSURE REDUCING REGULATOR (SELF CONTAINED)
- BACKPRESSURE REGULATOR (SELF CONTAINED)

- CONSERVATION VENT (V, P)
- FLAME ARRESTOR (XF)

PRIMARY ELEMENT SYMBOLS

- VARIABLE AREA FLOWMETER (FI)
- DIAPHRAM SEAL WITH PRESSURE LEAD LINE (PI)
- DIAPHRAM SEAL (LINE-MOUNTED) (PI)
- TEMPERATURE ELEMENT WITH THERMOWELL (OPTIONAL ELEMENT DESCRIPTION RTD, TYPE K...) (TE, RTD)
- FLOW SIGHT GLASS (LG - LEVEL SIGHT GLASS, SG - GENERAL SIGHT GLASS) (FG)
- LEVEL DEVICE, FLOAT TYPE

ACTUATOR SYMBOLS

- DIAPHRAM ACTUATOR
- CYLINDER ACTUATOR
- ROTARY MOTOR ACTUATOR (M)
- SOLENOID ACTUATOR (S)
- HAND ACTUATOR OR HANDWHEEL
- AIR ACTUATED VALVE W/POSITIONER (D, FC)
  - OPTIONAL:
  - D - DIRECT ACTING POSITIONER
  - R - REVERSE ACTING POSITIONER
  - VALVE FAIL SYMBOLS
  - FO - FAIL OPEN
  - FC - FAIL CLOSED
  - FL - FAIL LOCKED (LAST POSITION)
  - FI - FAIL INDETERMINATE
- LIMIT SWITCH ACTIVATED WHEN VALVE CLOSED (ZSH ACTIVATED WHEN VALVE OPEN) (ZSL)

ABBREVIATIONS:

POWER SUPPLY OR PURGE FLUID TYPES

AS - AIR SUPPLY
- IA - INSTRUMENT AIR
- PA - PLANT AIR

ES - ELECTRICAL SUPPLY
GS - GAS SUPPLY
HS - HYDRAULIC SUPPLY
NS - NITROGEN SUPPLY
SS - STEAM SUPPLY
WS - WATER SUPPLY

THE SUPPLY LEVEL MAY BE ADDED TO THE INSTRUMENT SUPPLY LINE, E.G., AG-100, A 100-PSI AIR SUPPLY; ES-24DC, A 24-VOLT DIRECT CURRENT POWER SUPPLY.

INSTRUMENTS:

HOA - HAND/OFF/AUTO
LOR - LOCAL/OFF/REMOTE
OPN - OPEN
CLS - CLOSE
SP - SETPOINT

TYPICAL ISA LETTER COMBINATIONS

First-Letters	Initiating or Measured Variable	Controllers: Recording	Controllers: Indicating	Controllers: Blind	Self-Actuated Control Valves	Readout Devices: Recording	Readout Devices: Indicating	Switches and Alarm Devices *: High **	Switches and Alarm Devices *: Low	Switches and Alarm Devices *: Comb	Transmitters: Recording	Transmitters: Indicating	Transmitters: Blind	Solenoids, Relays, Computing Devices	Primary Element	Test Point	Well or Probe	Viewing Device, Glass	Safety Device	Final Element
A	Analysis	ARC	AIC	AC		AR	AI	ASH	ASL	ASHL	ART	AIT	AT	AY	AE	AP	AW			AV
B	Burner/Combustion	BRC	BIC	BC		BR	BI	BSH	BSL	BSHL	BRT	BIT	BT	BY	BE		BW	BG		BZ
C	User's Choice																			
D	User's Choice																			
E	Voltage	ERC	EIC	EC		ER	EI	ESH	ESL	ESHL	ERT	EIT	ET	EY	EE					EZ
F	Flow Rate	FRC	FIC	FC	FCV, FICV	FR	FI	FSH	FSL	FSHL	FRT	FIT	FT	FY	FE	FP		FG		FV
FQ	Flow Quantity	FQRC	FQIC			FQR	FQI	FQSH	FQSL			FQIT	FQT	FQY	FQE					FQV
FF	Flow Ratio	FFRC	FFIC	FFC		FFR	FFI	FFSH	FFSL						FE					FFV
G	User's Choice																			
H	Hand		HIC	HC						HS										HV
I	Current	IRC	IIC			IR	II	ISH	ISL	ISHL	IRT	IIT	IT	IY	IE					IZ
J	Power	JRC	JIC			JR	JI	JSH	JSL	JSHL	JRT	JIT	JT	JY	JE					JV
K	Time	KRC	KIC	KC	KCV	KR	KI	KSH	KSL	KSHL	KRT	KIT	KT	KY	KE					KV
L	Level	LRC	LIC	LC	LCV	LR	LI	LSH	LSL	LSHL	LRT	LIT	LT	LY	LE		LW	LG		LV
M	User's Choice																			
N	User's Choice																			
O	User's Choice																			
P	Pressure/Vacuum	PRC	PIC	PC	PCV	PR	PI	PSH	PSL	PSHL	PRT	PIT	PT	PY	PE	PP			PSV, PSE	PV
PD	Pressure, Differential	PDRC	PDIC	PDC	PDCV	PDR	PDI	PDSH	PDSL		PDRT	PDIT	PDT	PDY	PE	PP				PDV
Q	Quantity	QRC	QIC			QR	QI	QSH	QSL	QSHL	QRT	QIT	QT	QY	QE					QZ
R	Radiation	RRC	RIC	RC		RR	RI	RSH	RSL	RSHL	RRT	RIT	RT	RY	RE		RW			RZ
S	Speed/Frequency	SRC	SIC	SC	SCV	SR	SI	SSH	SSL	SSHL	SRT	SIT	ST	SY	SE					SV
T	Temperature	TRC	TIC	TC	TCV	TR	TI	TSH	TSL	TSHL	TRT	TIT	TT	TY	TE	TP	TW		TSE	TV
TD	Temperature, Differential	TDRC	TDIC	TDC	TDCV	TDR	TDI	TDSH	TDSL		TDRT	TDIT	TDT	TDY	TE	TP	TW			TDV
U	Multivariable					UR	UI							UY						UV
V	Vibration/Machinery Analysis					VR	VI	VSH	VSL	VSHL	VRT	VIT	VT	VY	VE					VZ
W	Weight/Force	WRC	WIC	WC	WCV	WR	WI	WSH	WSL	WSHL	WRT	WIT	WT	WY	WE					WZ
WD	Weight/Force, Differential	WDRC	WDIC	WDC	WDCV	WDR	WDI	WDSH	WDSL		WDRT	WDIT	WDT	WDY	WE					WDZ
X	Unclassified																			
Y	Event/State/Presence		YIC	YC		YR	YI	YSH	YSL				YT	YY	YE					YZ
Z	Position/Dimension	ZRC	ZIC	ZC	ZCV	ZR	ZI	ZSH	ZSL	ZSHL	ZRT	ZIT	ZT	ZY	ZE					ZV
ZD	Gauging/Deviation	ZDRC	ZDIC	ZDC	ZDCV	ZDR	ZDI	ZDSH	ZDSL		ZDRT	ZDIT	ZDT	ZDY	ZDE					ZDV

Note: This table is not all-inclusive.
* A, alarm, the annunciating device, may be used in the same fashion as S, switch, the actuating device.
** The letters H and L may be omitted in the undefined case.

Other Possible Combinations:
- FO (Restriction Orifice)
- FRK, HK (Control Stations)
- LLH (Level Light/High)
- LCH (Level Control High)
- KQI (Running Time Indicator)
- HMS (Hand Momentary Switch)
- LCL (Level Control Low)

INSTRUMENT / PROCESS LINES DESIGNATIONS

000	UNDERGROUND INSTRUMENTS
100	PROCESS INSTRUMENTS
200	VENDOR SUPPLIED INSTRUMENTS
300	UTILITY INSTRUMENTS
0000	UNDERGROUND LINES
1000	PROCESS LINES
2000	VENDOR SUPPLIED LINES
3000	UTILITY LINES
CS	CARBON STEEL PIPE
CSVD	CARBON STEEL VENT DUCT (12 GAUGE)
DVW	DRAIN VENT WASTE PIPE
HDPE	HIGH DENSITY POLYETHYLENE PIPE
KYA	KYNAR
PDE	CPVC, SOLID
PVC	POLYVINYL CHLORIDE PIPE SCHEDULE 40
PVE	POLYVINYL CHLORIDE PIPE SCHEDULE 80
PPL	POLYPROPYLENE LINED/LINED DUCTILE PIPE
SS	STAINLESS STEEL
TFD	TEFLON
B	BARE
I	INSULATED
J	JACKETED AND INSULATED
TE	ELECTRICALLY TRACED AND INSULATED

IDENTIFICATION LETTERS

	FIRST-LETTER: MEASURED OR INITIATING VARIABLE	FIRST-LETTER: MODIFIER	SUCCEEDING-LETTERS: READOUT OR PASSIVE FUNCTION	SUCCEEDING-LETTERS: OUTPUT FUNCTION	SUCCEEDING-LETTERS: MODIFIER
A	Analysis		Alarm		
B	Burner/Combustion		User's Choice	User's Choice	User's Choice
C	User's Choice			Control	
D	User's Choice	Differential			
E	Voltage		Sensor (Primary Element)		
F	Flow Rate	Ratio (Fraction)			
G	User's Choice		Glass, Viewing Device		
H	Hand				High
I	Current (Electrical)		Indicate		
J	Power	Scan			
K	Time, Time Schedule	Time Rate of Change		Control Station	
L	Level		Light		Low
M	User's Choice	Momentary			Middle, Intermediate
N	User's Choice		User's Choice	User's Choice	User's Choice
O	User's Choice		Orifice, Restriction		
P	Pressure, Vacuum		Point (Test) Connection		
Q	Quantity	Integrate, Totalize			
R	Radiation		Record		
S	Speed, Frequency	Safety		Switch	
T	Temperature			Transmit	
U	Multivariable		Multifunction	Multifunction	Multifunction
V	Vibration, Machinery Analysis			Valve, Damper, Louver	
W	Weight, Force		Well		
X	Unclassified	X Axis	Unclassified	Unclassified	Unclassified
Y	Event, State, or Presence	Y Axis		Relay, Compute, Convert	
Z	Position, Dimension	Z Axis		Driver, Actuator, Unclassified Final Control Element	

100% REVIEW DRAWINGS
NOT FOR CONSTRUCTION

SCALE VERIFICATION: THIS BAR MEASURES 1" ON ORIGINAL. ADJUST SCALE ACCORDINGLY.

No	Revision	Date	Initial
4	FINAL 100% DESIGN	10/12/10	JJ
3	REISSUED 95% SUBMITTAL	02/01/10	JJ
2	95% SUBMITTAL	12/30/09	JJ
1	PRELIMINARY - FOR REVIEW	11/30/09	JJ

RADIO MATERIALS
ATTICA, INDIANA

GROUNDWATER REMEDIATION SYSTEM

LEGEND
ENGINEERING FLOWSHEET

CONESTOGA-ROVERS & ASSOCIATES

Source Reference:			Date: DECEMBER 2009
Project Manager: S. WANNER	Reviewed By: JJJ	Designed By: JFS	Drawn By: JFS
Scale: NONE	Project No: 19190-10	Report No: 041	Drawing No: EF-01

19190-10(041)EF-B0001 FEB 01/2010

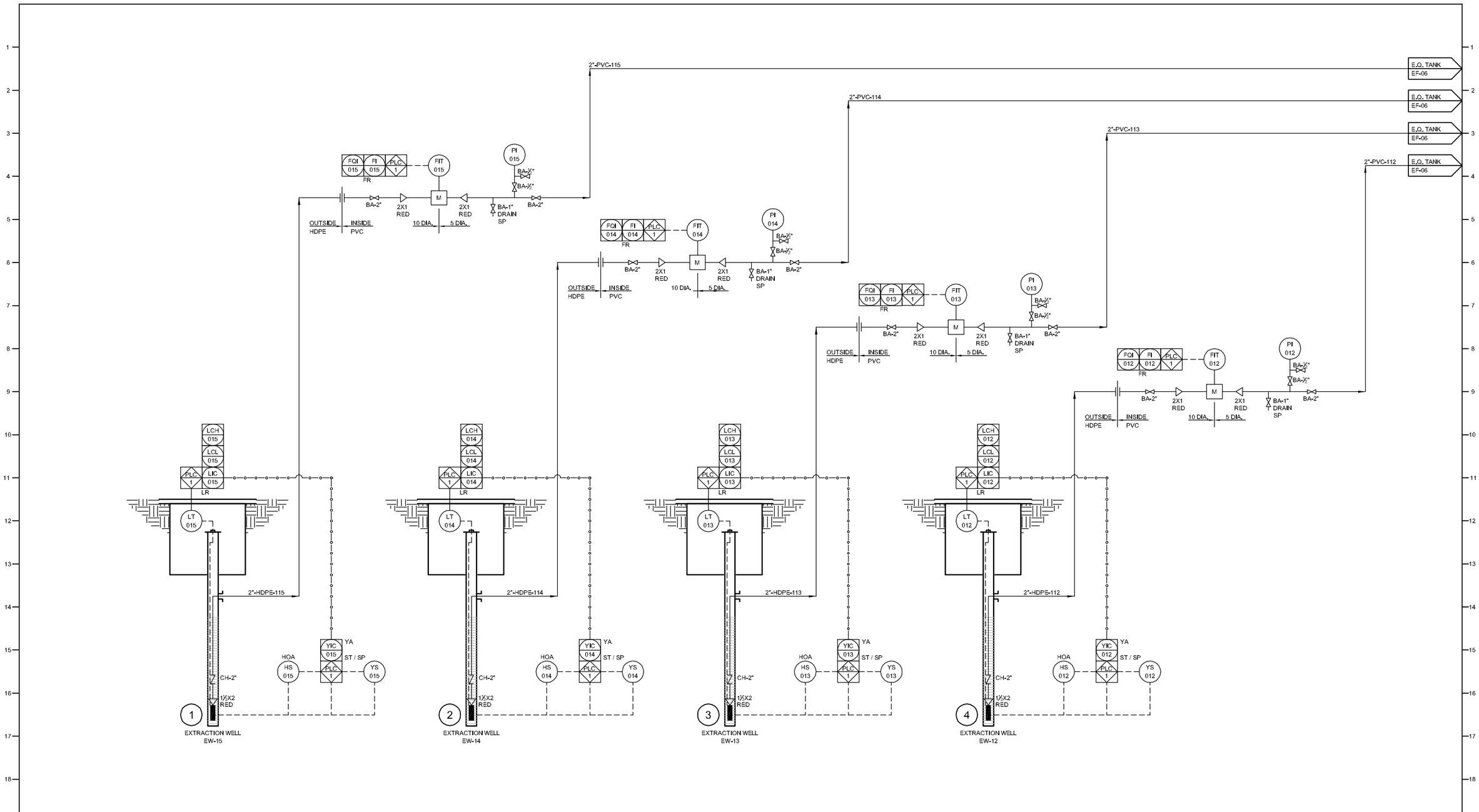

PLANT ID.	1	2	3	4	5	6	7	8	9	10	11	12
NAME	EXTRACTION WELL EW - 15 PUMP	EXTRACTION WELL EW - 14 PUMP	EXTRACTION WELL EW - 13 PUMP	EXTRACTION WELL EW - 12 PUMP								
MATERIAL	S.S.	S.S.	S.S.	S.S.								
SIZE	23⅜"L X 3³⁄₃₂"Ø	23⅜"L X 3³⁄₃₂"Ø	23⅜"L X 3³⁄₃₂"Ø	23⅜"L X 3³⁄₃₂"Ø								
CAPACITY	6 GPM @ 100 FT	6 GPM @ 100 FT	10 GPM @ 110 TDH	10 GPM @ 110 TDH								
TEMP/PRESS	140°F MAX / 220 PSI	140°F MAX / 220 PSI	140°F MAX / 220 PSI	140°F MAX / 220 PSI								
HP/VOLTS	½ / 460 / 3450	½ / 460 / 3450	½ / 460 / 3450	½ / 460 / 3450								
WEIGHT	26LBS	26LBS	26LBS	26LBS								
MANUFACTURE	GRUNDFOS	GRUNDFOS	GRUNDFOS	GRUNDFOS								
MODEL	10E5	10E5	10E8	10E8								
VENDOR												

SUBMERSIBLE PUMP

No	Revision	Date	Initial
4	FINAL 100% DESIGN	10/12/10	JJ
3	REISSUED 95% SUBMITTAL	02/01/10	JJ
2	95% SUBMITTAL	12/30/09	JJ
1	PRELIMINARY - FOR REVIEW	11/30/09	JJ

100% REVIEW DRAWINGS
NOT FOR CONSTRUCTION

RADIO MATERIALS
ATTICA, INDIANA

GROUNDWATER REMEDIATION SYSTEM

ENGINEERING FLOWSHEET
SOUTH EXTRACTION WELLS

CONESTOGA-ROVERS & ASSOCIATES

Source Reference:			Date: DECEMBER 2009
Project Manager: S. WAGNER	Reviewed By: JJJ	Designed By: JFS	Drawn By: JFS
Scale: NONE	Project No: 19190-10	Report No: 041	Drawing No: EF-02

19190-0(041)EF-BU002 OCT 11/2010

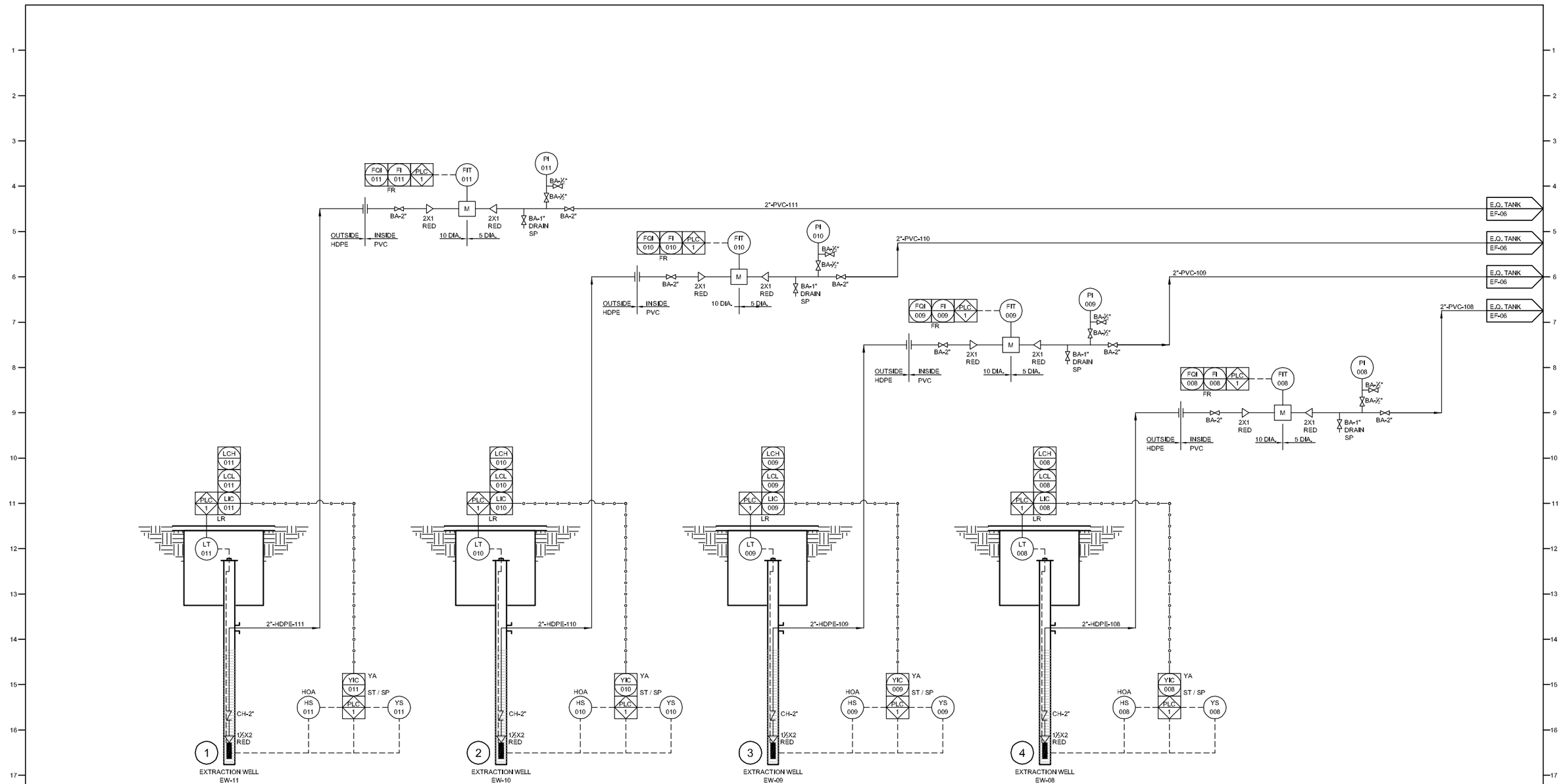

PLANT ID.	1	2	3	4	5	6	7	8	9	10	11	12
NAME	EXTRACTION WELL EW - 11 PUMP	EXTRACTION WELL EW - 10 PUMP	EXTRACTION WELL EW - 09 PUMP	EXTRACTION WELL EW - 08 PUMP								
MATERIAL	S.S.	S.S.	S.S.	S.S.								
SIZE	23⅜"L X 3³⁄₃₂"Ø	23⅜"L X 3³⁄₃₂"Ø	23⅜"L X 3³⁄₃₂"Ø	23⅜"L X 3³⁄₃₂"Ø								
CAPACITY	10 GPM @ 110 TDH	10 GPM @ 110 TDH	10 GPM @ 110 TDH	10 GPM @ 110 TDH								
TEMP/PRESS	140°F MAX / 220 PSI	140°F MAX / 220 PSI	140°F MAX / 220 PSI	140°F MAX / 220 PSI								
HP/VOLTS	½ / 460 / 3450	½ / 460 / 3450	½ / 460 / 3450	½ / 460 / 3450								
WEIGHT	26LBS	26LBS	26LBS	26LBS								
MANUFACTURE	GRUNDFOS	GRUNDFOS	GRUNDFOS	GRUNDFOS								
MODEL	10E8	10E8	10E8	10E8								
VENDOR												

DISCHARGE

No	Revision	Date	Initial
4	FINAL 100% DESIGN	10/12/10	JJ
3	REISSUED 95% SUBMITTAL	02/01/10	JJ
2	95% SUBMITTAL	12/30/09	JJ
1	PRELIMINARY - FOR REVIEW	11/30/09	JJ

100% REVIEW DRAWINGS
NOT FOR CONSTRUCTION

RADIO MATERIALS
ATTICA, INDIANA

GROUNDWATER REMEDIATION SYSTEM

ENGINEERING FLOWSHEET
SOUTH EXTRACTION WELLS

CONESTOGA-ROVERS & ASSOCIATES

Source Reference:			Date: DECEMBER 2009
Project Manager: S. WAGNER	Reviewed By: JJJ	Designed By: JFS	Drawn By: JFS
Scale: NONE	Project No: 19190-10	Report No: 041	Drawing No: EF-03

19190-10(041)EF-BU002 FEB 01/2010

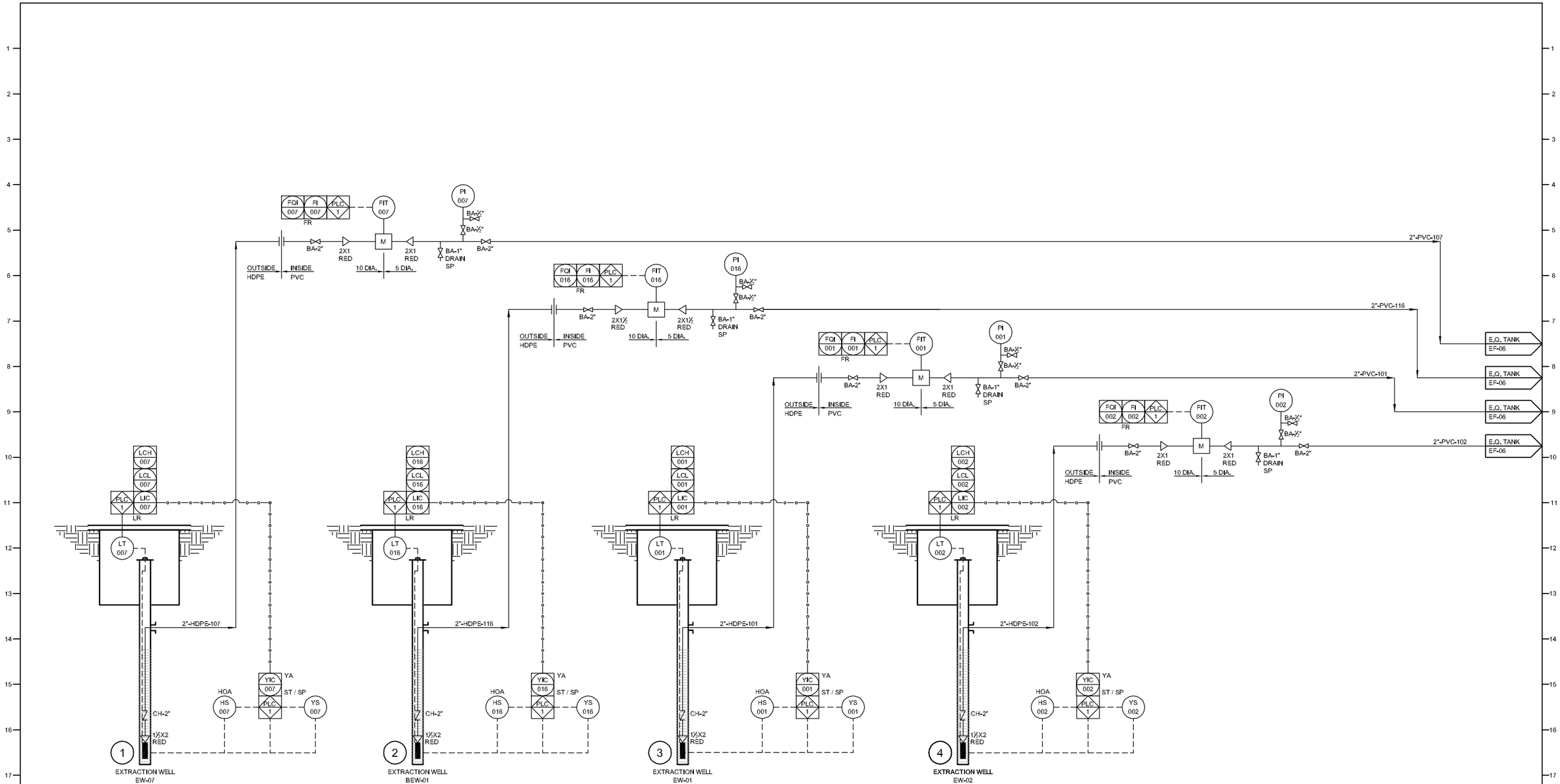

PLANT ID.	1	2	3	4	5	6	7	8	9	10	11	12
NAME	EXTRACTION WELL EW - 07 PUMP	EXTRACTION WELL BEW - 01 PUMP	EXTRACTION WELL EW - 01 PUMP	EXTRACTION WELL EW - 02 PUMP								
MATERIAL	S.S.	S.S.	S.S.	S.S.								
SIZE	23⅜"L X 3³⁄₃₂"Ø	23⅜"L X 3³⁄₃₂"Ø	23⅜"L X 3³⁄₃₂"Ø	23⅜"L X 3³⁄₃₂"Ø								
CAPACITY	10 GPM @ 110 TDH	25 GPM @ 110 TDH	10 GPM @ 110 TDH	10 GPM @ 110 TDH								
TEMP/PRESS	140°F MAX / 220 PSI	140°F MAX / 220 PSI	140°F MAX / 220 PSI	140°F MAX / 220 PSI								
HP/VOLTS/PH	½ / 460 / 3450	1½ / 460 / 3450	½ / 460 / 3450	½ / 460 / 3450								
WEIGHT	26LBS	26LBS	26LBS	26LBS								
MANUFACTURE	GRUNDFOS	GRUNDFOS	GRUNDFOS	GRUNDFOS								
MODEL	10E8	25E8	10E8	10E8								
VENDOR												

EQUIPMENT DATA

No	Revision	Date	Initial
4	FINAL 100% DESIGN	10/12/10	JJ
3	REISSUED 95% SUBMITTAL	02/01/10	JJ
2	95% SUBMITTAL	12/30/09	JJ
1	PRELIMINARY - FOR REVIEW	11/30/09	JJ

100% REVIEW DRAWINGS
NOT FOR CONSTRUCTION

RADIO MATERIALS
ATTICA, INDIANA

GROUNDWATER REMEDIATION SYSTEM

ENGINEERING FLOWSHEET
NORTH EXTRACTION WELLS

CONESTOGA-ROVERS & ASSOCIATES

Source Reference:			Date: DECEMBER 2009
Project Manager: S. WANNER	Reviewed By: JJJ	Designed By: JFS	Drawn By: JFS
Scale: NONE	Project No: 19190-10	Report No: 041	Drawing No: EF-04

19190-0(041)EF-BU002 OCT 11/2010

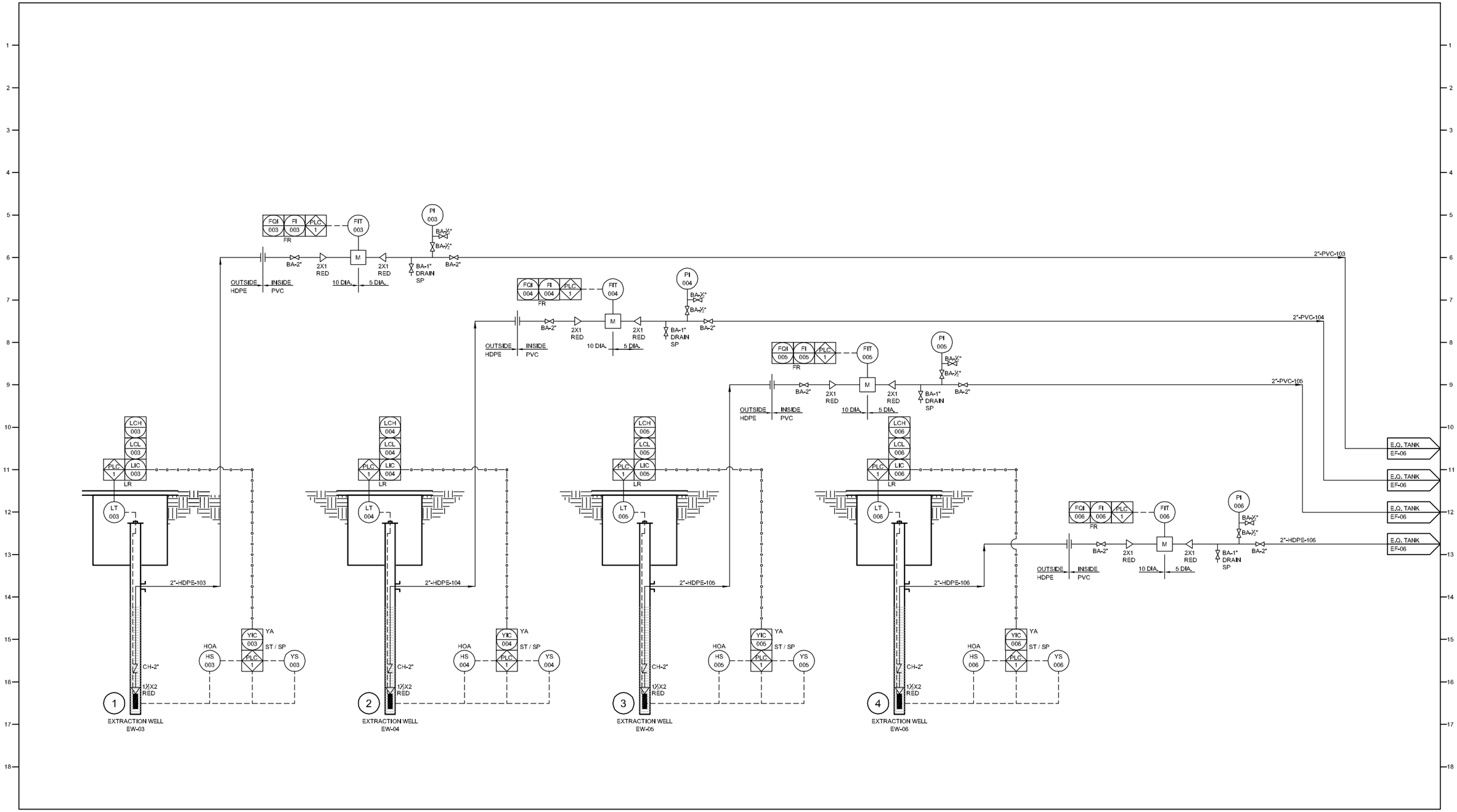

PLANT ID.	1	2	3	4	5	6	7	8	9	10	11	12
NAME	EXTRACTION WELL EW - 03 PUMP	EXTRACTION WELL EW - 04 PUMP	EXTRACTION WELL EW - 05 PUMP	EXTRACTION WELL EW - 06 PUMP								
MATERIAL	S.S.	S.S.	S.S.	S.S.								
SIZE	23⅜"L X 3³⁄₃₂"Ø	23⅜"L X 3³⁄₃₂"Ø	23⅜"L X 3³⁄₃₂"Ø	23⅜"L X 3³⁄₃₂"Ø								
CAPACITY	10 GPM @ 110 TDH	10 GPM @ 110 TDH	10 GPM @ 110 TDH	10 GPM @ 110 TDH								
TEMP/PRESS	140°F MAX / 220 PSI	140°F MAX / 220 PSI	140°F MAX / 220 PSI	140°F MAX / 220 PSI								
HP/VLT/PH	1½ / 460 / 3450	½ / 460 / 3450	½ / 460 / 3450	½ / 460 / 3450								
WEIGHT	26LBS	26LBS	26LBS	26LBS								
MANUFACTURE	GRUNDFOS	GRUNDFOS	GRUNDFOS	GRUNDFOS								
MODEL	10E8	10E8	10E8	10E8								
VENDOR												

EQUIPMENT DATA

No	Revision	Date	Initial
4	FINAL 100% DESIGN	10/12/10	JJ
3	REISSUED 95% SUBMITTAL	02/01/10	JJ
2	95% SUBMITTAL	12/30/09	JJ
1	PRELIMINARY - FOR REVIEW	11/30/09	JJ

100% REVIEW DRAWINGS
NOT FOR CONSTRUCTION

RADIO MATERIALS
ATTICA, INDIANA

GROUNDWATER REMEDIATION SYSTEM

ENGINEERING FLOWSHEET
NORTH EXTRACTION WELLS

CONESTOGA-ROVERS & ASSOCIATES

Source Reference:			Date: DECEMBER 2009
Project Manager: S. WANNER	Reviewed By: JJJ	Designed By: JFS	Drawn By: JFS
Scale: NONE	Project No: 19190-10	Report No: 041	Drawing No: EF-05

19190-10(041)EF-BU002 FEB 01/2010

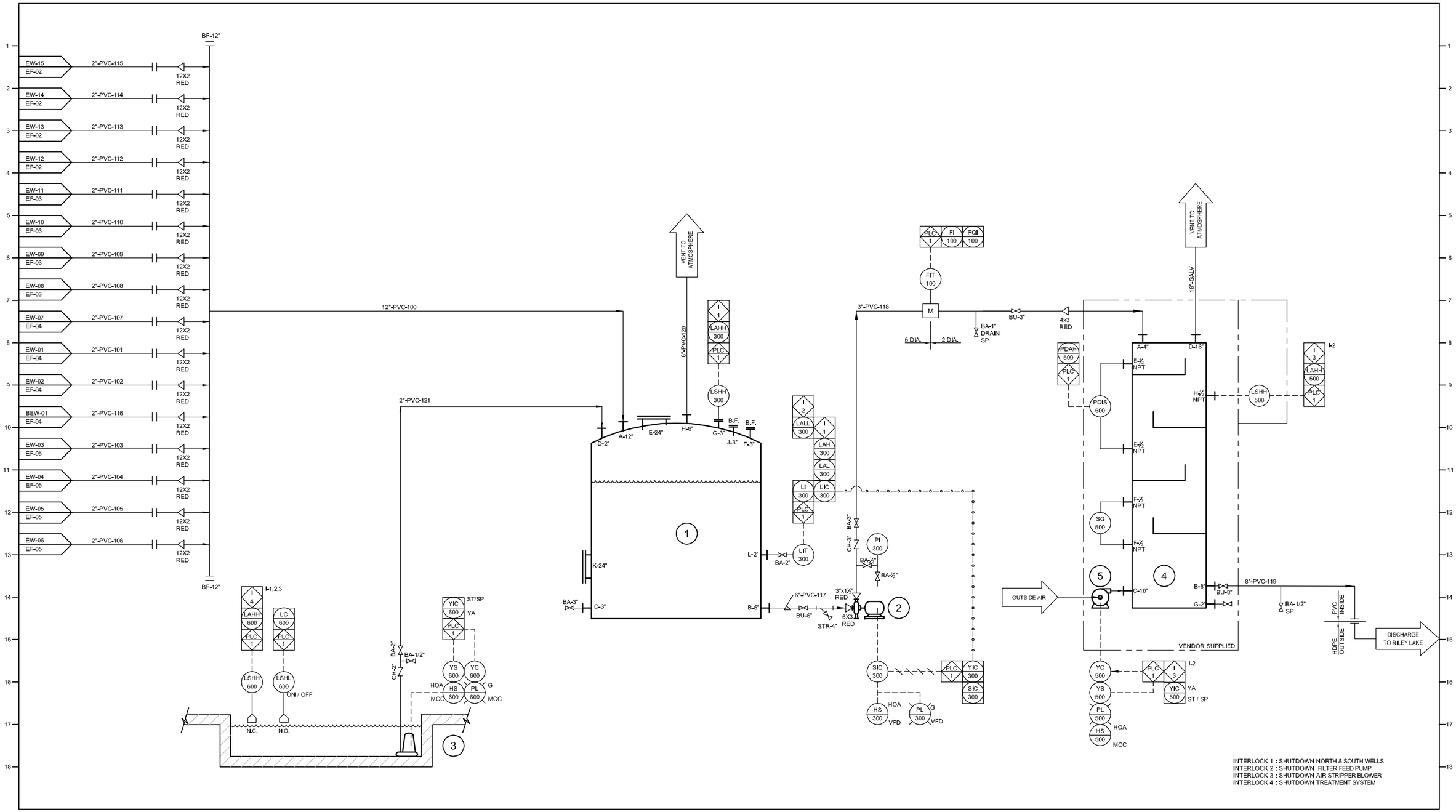

PLANT ID.	T-1 (1)	P-17 (2)	P-18 (3)	AS-1 (4)	AS-2 (5)	(6)	(7)	(8)	(9)	(10)	(11)	(12)
NAME	EQUALIZATION TANK	FILTER FEED PUMP	BUILDING SUMP PUMP	AIR STRIPPER	AIR STRIPPER BLOWER							
MATERIAL	POLYETHYLENE	D.I.	C.I.	304 S.S.	C.S.							
SIZE	10'-0" DIA x 10'-10"	1.5 X 3-7		34"WX140"L X103"H								
CAPACITY	5500 GAL	160 GPM @ 35' TDH	50 GPM @ 50' TDH		1800SCFM @ 22"WC							
TEMP/PRESS												
HP/KW/RPM		3 / 460 / 3570	1 / 460 / 3450		15 / 460 / 3							
WEIGHT												
MANUFACTURE	IMG	GOULDS	GOULDS	BISCO	BISCO							
MODEL		3196 STI	3885	31241								
VENDOR												

No.	Revision	Date	Initial
4	FINAL 100% DESIGN	10/12/10	JJ
3	REISSUED 95% SUBMITTAL	02/01/10	JJ
2	95% SUBMITTAL	12/30/09	JJ
1	PRELIMINARY - FOR REVIEW	11/30/09	JJ

INTERLOCK 1 : SHUTDOWN NORTH & SOUTH WELLS
INTERLOCK 2 : SHUTDOWN FILTER FEED PUMP
INTERLOCK 3 : SHUTDOWN AIR STRIPPER BLOWER
INTERLOCK 4 : SHUTDOWN TREATMENT SYSTEM

100% REVIEW DRAWINGS
NOT FOR CONSTRUCTION

RADIO MATERIALS
ATTICA, INDIANA

GROUNDWATER REMEDIATION SYSTEM

ENGINEERING FLOWSHEET
GWT FACILITY

CONESTOGA-ROVERS & ASSOCIATES

Source Reference:			Date: DECEMBER 2009
Project Manager: S. WANNER	Reviewed By: JJJ	Designed By: JFS	Drawn By: JFS
Scale: NONE	Project No: 19190-10	Report No: 041	Drawing No: EF-06

19190-10(041)EF-BU002 OCT 11/2010

GENERAL NOTES

1. THE CONTRACTOR SHALL NOT SCALE THE DRAWINGS TO ESTABLISH DIMENSIONS. ALL DIMENSIONS SHALL BE CHECKED ON-SITE PRIOR TO ASSEMBLY OR CONSTRUCTION OF ANY WORK.
2. THE STRUCTURE HAS BEEN DESIGNED FOR THE IN-SERVICE LOADS. THE METHODS, PROCEDURES AND SEQUENCES OF CONSTRUCTION ARE THE SOLE RESPONSIBILITY OF THE CONTRACTOR. SUPPORTING FORMWORK FOR CONCRETE CONSTRUCTION SHALL NOT BE REMOVED BEFORE THE CONCRETE HAS GAINED SUFFICIENT STRENGTH TO SAFELY SUPPORT THE DEAD AND SUPERIMPOSED LOADS. THE CONTRACTOR SHALL TAKE ALL NECESSARY PRECAUTIONS TO AVOID OVERLOADS, AND MAINTAIN AND INSURE THE INTEGRITY OF THE STRUCTURE AT ALL STAGES OF CONSTRUCTION.
3. THE CONTRACTOR SHALL REFER TO MECHANICAL & ELECTRICAL DRAWINGS AND SPECIFICATIONS FOR SIZE AND LOCATION OF SLEEVES, ANCHORS, INSERTS AND OPENINGS REQUIRED. PRINCIPAL OPENINGS IN THE STRUCTURE ARE SHOWN ON THE DRAWINGS, SLEEVES AND OPENINGS NOT SHOWN ON STRUCTURAL DRAWINGS SHALL BE SUBJECT TO APPROVAL OF THE ENGINEER.
4. MATERIALS SPECIFIED ON THE DRAWINGS AND/OR IN THE SPECIFICATIONS SHALL BE USED UNLESS THE CONTRACTOR OBTAINS WRITTEN APPROVAL OF THE ENGINEER TO USE ALTERNATIVE MATERIALS. WHEN REQUESTING SUCH APPROVAL, THE CONTRACTOR SHALL PROVIDE ADEQUATE AND DETAILED MANUFACTURER'S LITERATURE AND TECHNICAL DATA FOR EACH MATERIAL PRIOR TO ITS POTENTIAL USE.
5. NO EXCAVATION WORK MAY BEGIN UNTIL ALL UNDERGROUND UTILITIES HAVE BEEN LOCATED AND MARK OUTS HAVE BEEN APPROVED BY THE OWNER. UTILITIES MAY EXIST THAT ARE NOT SHOWN ON THE DRAWINGS.

CONCRETE NOTES

1. CONCRETE CONSTRUCTION SHALL CONFORM TO ACI 301, 305, 306, 308, 315, 318 AND 350R SPECIFICATIONS.
2. LATEST REVISION AND/OR VERSION OF ALL CODES AND REFERENCE STANDARDS SHALL BE FOLLOWED.
3. CONCRETE SHALL DEVELOP A MINIMUM COMPRESSIVE STRENGTH OF 4,000 PSI AT 28 DAYS, SLUMP SHALL BE 3 1/2 INCHES ± 1 INCH.
4. CONCRETE SHALL BE AIR ENTRAINED. CEMENT SHALL BE PORTLAND CEMENT CONFORMING TO ASTM C150, TYPE II WITH AIR-ENTRAINING ADMIXTURE CONFORMING TO ASTM C260. AIR CONTENT (% BY VOLUME) SHALL NOT BE LESS THAN 4% NOR GREATER THAN 6.5% AND SHALL DEPEND ON MAXIMUM SIZE AGGREGATE USED.
5. NO ADMIXTURE SHALL CONTAIN CALCIUM CHLORIDE BASED COMPOUNDS. FLYASH AND POZZOLAN CONTENT SHALL NOT EXCEED 20% BY WEIGHT OF CEMENT.
6. REINFORCING BARS SHALL CONFORM TO ASTM A615 GRADE 60 SPECIFICATIONS.
7. LAP SPLICES IN REINFORCING BARS SHALL BE IN ACCORDANCE WITH THE TABLE BELOW.
8. CONCRETE PROTECTION FOR REINFORCING BARS (UNLESS OTHERWISE NOTED):
   A. FOOTINGS - 3 INCH BOTTOM AND SIDES, 2 INCH TOP
   B. GRADE BEAMS - 2 INCH BOTTOM AND SIDES, 1 1/2 INCH TOP (TO STIRRUPS)
   C. PIERS - 1 1/2 INCH (TO TIES)
   D. FORMED SLABS - 1 1/2 INCH TOP AND BOTTOM
   E. WALLS AND PADS - 2 INCH
   F. EXTERIOR SLABS ON FILL - 2 1/2 INCH BOTTOM, 2 INCH TOP
   G. INTERIOR SLABS ON FILL - 2 1/2 INCH BOTTOM, 1 1/2 INCH TOP
   H. SURFACES IN CONCTACT WITH OR OVER LIQUID - 2 INCH
9. NO CONSTRUCTION JOINT SHALL BE MADE UNLESS SHOWN ON DRAWINGS OR APPROVED IN WRITING BY THE ENGINEER.
10. ANCHOR BOLTS SHALL BE CARBON STEEL CONFORMING TO ASTM F1554 SPECIFICATIONS, WITH HEAVY HEX NUTS AND WASHERS. BOLTS, NUTS AND WASHERS SHALL BE GALVANIZED CONFORMING TO ASTM A123 AND A153 SPECIFICATIONS, AND SHALL BE ACCURATELY PLACED USING TEMPLATES.
11. GROUT IN DRILLED HOLES FOR ANCHOR BOLTS AND REINFORCING STEEL DOWELS, AND UNDER BASE PLATES SHALL BE NON-SHRINK NON-METALLIC "MASTERFLOW 713" OR "MASTERFLOW 928" BY DEGUSSA BUILDING SYSTEMS, MANUFACTURER'S INSTRUCTIONS CONCERNING HOLE SIZE, SURFACE PREPARATION AND INSTALLATION SHALL BE FOLLOWED.
12. EDGE TOOL TOP HORIZONTAL EDGES OF PIERS AND EQUIPMENT (PUMP) PADS. OTHER EXPOSED EDGES SHALL HAVE 3/4 INCH CHAMFER.
13. RAMPS, PADS AND SLABS SHALL BE TROWEL FINISHED TO WITHIN 1/8 INCH OF ELEVATIONS SHOWN ON DRAWINGS. FOLLOWING TROWELLING, PROVIDE NON-SLIP MEDIUM BROOM FINISH.
14. PROVIDE CORNER REINFORCING BARS TO MATCH HORIZONTAL BARS AT CORNERS AND INTERSECTIONS FOR CONTINUITY.
15. WELDED WIRE FABRIC SHALL CONFORM TO ASTM A82 AND A185 SPECIFICATIONS.
16. PROVIDE MINIMUM OF 6 INCH MECHANICALLY COMPACTED CRUSHED STONE UNDER SLABS, FOUNDATIONS AND WHERE OTHERWISE NOTED ON DRAWINGS.
17. JOINT SEALANT SHALL BE ONE-COMPONENT POLYURETHANE "SIKAFLEX-1A" BY SIKA CHEMICAL CORPORATION.
18. PRIOR TO CASTING CONCRETE PADS AND PIERS, BASE SLAB AND WALL SHALL BE CLEANED AND COATED WITH A CONCRETE BONDING AGENT. BONDING AGENT SHALL BE "CONCRESIVE LIQUID (LPL)" OR "CONCRESIVE PASTE (LPL)" BY DEGUSSA BUILDING SYSTEMS OR ESCOWELD EPOXY ADHESIVE, MANUFACTURER'S INSTRUCTIONS CONCERNING SURFACE PREPARATION AND APPLICATION SHALL BE FOLLOWED.

LAP SPLICE LENGTHS (IN)				
BAR SIZE	TOP BARS		OTHERS	
	A	B	A	B
#3 (10)	19	24	15	19
#4 (13)	25	32	19	25
#5 (16)	31	40	24	31
#6 (19)	37	48	29	37
#7 (22)	54	70	42	54
#8 (25)	62	80	48	62
#9 (29)	70	91	54	70
#10 (32)	79	102	61	79
#11 (36)	87	113	67	87

1. BAR SIZES IN PARENTHESIS (13) ARE CORRESPONDING METRIC SIZES.
2. LAP SPLICES SHALL BE CLASS B SPLICES EXCEPT THAT CLASS A SPLICES ARE ALLOWED WHEN ONE-HALF OR LESS OF TOTAL REINFORCEMENT IS SPLICED WITHIN A LAP LENGTH.
3. TOP BARS ARE HORIZONTAL BARS WITH MORE THAN 12" OF CONCRETE BELOW BARS.

STRUCTURAL STEEL NOTES

1. FABRICATION, ERECTION AND WORKMANSHIP SHALL CONFORM TO THE DESIGN DRAWINGS, SCOPE OF WORK AND SPECIFICATIONS, AND SHALL BE IN ACCORDANCE WITH THE AISC SPECIFICATIONS.
2. LATEST REVISION AND/OR VERSION OF ALL CODES AND REFERENCE STANDARDS SHALL BE FOLLOWED.
3. ALL DIMENSIONS SHALL BE FIELD CHECKED BEFORE FABRICATION MAY BEGIN.
4. WELDING SHALL BE IN ACCORDANCE WITH THE AWS STRUCTURAL WELDING CODE. WELDED CONNECTIONS SHALL BE MADE WITH E70XX ELECTRODES. ROOT PASS AND TACK WELDS SHALL BE MADE WITH E6010 ELECTRODES. FILLET WELDS ON STANDARD FRAMED BEAM CONNECTIONS MAY BE 3/16 INCH MINIMUM. ALL OTHER FILLET WELDS SHALL BE 1/4 INCH MINIMUM.
5. GUSSET PLATES AND CLIP ANGLES SHALL BE 5/16 INCH THICK MINIMUM (UNLESS OTHER- WISE NOTED). GENERALLY, ONE-SIDED CONNECTIONS FOR BEAMS SHALL NOT BE USED.
6. SHOP CONNECTIONS MAY BE EITHER WELDED OR BOLTED. FIELD CONNECTIONS SHALL BE BOLTED (UNLESS OTHERWISE NOTED). CONNECTIONS FOR NEW STEEL FRAMING TO EXISTING STEEL SHALL HAVE ONE END OF MEMBER BOLTED TO ALLOW FOR ADJUSTMENTS. WELDED CONNECTIONS, FIELD AND SHOP, SHALL BE CONTINUOUS FULL PENETRATION SEAL WELDS.
7. FASTENERS SHALL BE HIGH STRENGTH ASTM A325-N, 3/4 INCH DIAMETER GALVANIZED BOLTS WITH ASTM A194 GRADE 2H OR A563 GRADE DH NUTS TAPPED OVERSIZE AFTER GALVANIZING AND THREADS LUBRICATED, HARDENED WASHERS SHALL BE PROVIDED UNDER ROTATING PART OF NUT AND BOLT ASSEMBLY. CONNECTIONS NOTED WITH A325-SC BOLTS SHALL BE SLIP CRITICAL PER AISC SPECIFICATIONS.
8. FASTENERS FOR HANDRAIL, LADDER AND STAIR CONNECTIONS SHALL BE 3/4 INCH DIAMETER GALVANIZED BOLTS CONFORMING TO ASTM A307 SPECIFICATIONS.
9. BOLT HOLES SHALL NOT BE LARGER THAN 1/16 INCH PLUS DIAMETER OF THE BOLT, A MINIMUM OF TWO BOLTS PER CONNECTION SHALL BE REQUIRED, UNLESS NOTED OTHERWISE.
10. WHERE BRACING FORCES ARE NOT GIVEN, DESIGN CONNECTIONS AT EACH END FOR 50% OF MEMBER CAPACITY IN TENSION.
11. ALL STEEL SHALL BE PAINTED WITH ONE COAT PRIMER (6 MILS DFT) EPOXY BAR-RUST 235 AND ONE COAT FINISH (2 MILS DFT) ALIPHATIC URETHANE DEVTHANE 379 BY ICI DULUX-DEVOE COATINGS OR AN APPROVED EQUAL, SURFACE PREPARATION SHALL COMPLY WITH MANUFACTURES REQUIREMENTS. FINISH COAT COLOR TO BE CHOSEN BY ENGINEER AND OWNER.
12. STRUCTURAL STEEL SHALL CONFORM TO FOLLOWING SPECIFICATIONS:
   A. W , WT AND HP SHAPES - ASTM A992, 50 KSI MINIMUM YIELD STRESS, 65 KSI TENSILE STRESS
   B. CHANNELS - ASTM A36, 36 KSI MINIMUM YIELD STRESS, 58 KSI TENSILE STRESS
   C. ANGLES - ASTM A36, 36 KSI MINIMUM YIELD STRESS, 58 KSI TENSILE STRESS
   D. PIPE - ASTM A53 GRADE B, 35 KSI MINIMUM YIELD STRESS, 60 KSI TENSILE STRESS
   E. PLATES - ASTM A36, 36 KSI MINIMUM YIELD STRESS, 58 KSI TENSILE STRESS

FOUNDATION NOTES

1. FOUNDATION DESIGN IS BASED UPON USING A BEARING CAPACITY OF 1500 POUNDS PER SQUARE FOOT PER GEOTECHNICAL RECOMMENDATIONS BY INSPECSOL ENGINEERING INC, PROJECT No. 019190-02, DATED 12/14/2009. CONTRACTOR SHALL VERIFY THE ALLOWABLE BEARING CAPACITY PRIOR TO STARTING CONSTRUCTION.
2. EXISTING UNDERGROUND PIPING, REINFORCED CONCRETE STRUCTURES, UTILITIES, ELECTRICAL CABLES AND GROUNDING SYSTEMS NOT IDENTIFIED ON THE DRAWINGS MAY EXIST, WHEN UNCOVERED, THE CONTRACTOR MUST REPORT FINDINGS TO THE ENGINEER FOR IDENTIFICATION AND RECOMMENDED ACTION.

100% REVIEW DRAWINGS
NOT FOR CONSTRUCTION

SCALE VERIFICATION: THIS BAR MEASURES 1" ON ORIGINAL. ADJUST SCALE ACCORDINGLY.

No	Revision	Date	Initial
3	FINAL 100% DESIGN	10/12/10	JJ
2	REISSUED 95% SUBMITTAL	02/01/10	JJ
1	95% SUBMITTAL	12/30/09	JJ

RADIO MATERIALS
ATTICA, INDIANA

GROUNDWATER REMEDIATION SYSTEM

GENERAL NOTES

CONESTOGA-ROVERS & ASSOCIATES

Source Reference			Date: DECEMBER 2009
Project Manager: S. WANNER	Reviewed By: J. THORNTON	Designed By: L. LEMUNYAN	Drawn By: M. GALLEY
Scale: NONE	Project No: 19190-10	Report No: 041	Drawing No: ST-00

19190-10(041)ST-GU001 APR 08/2010

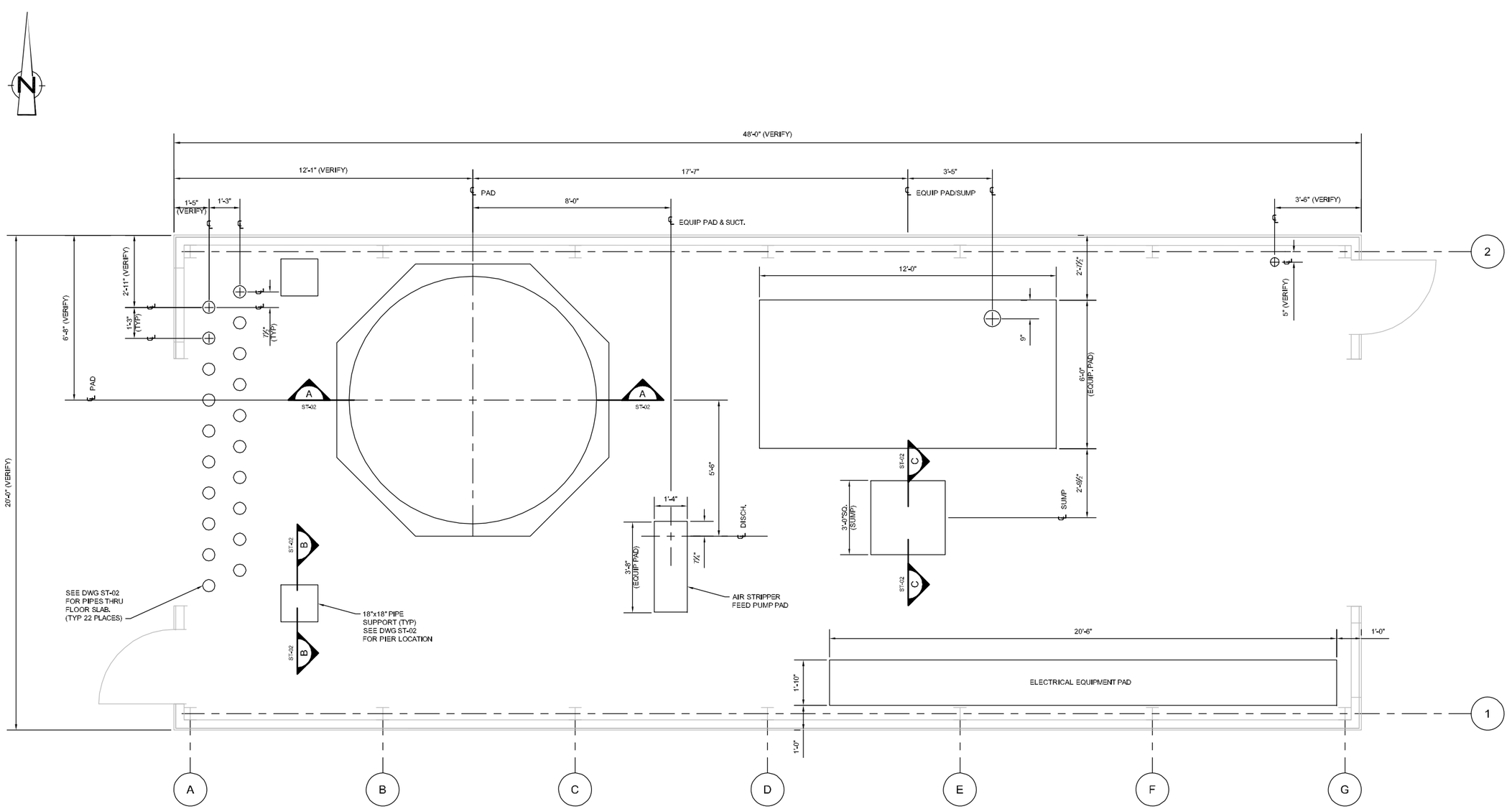

TREATMENT BUILDING FLOOR PLAN

SCALE: ½"=1'-0"

NOTE:
CONTRACTOR SHALL VERIFY
ALL DIMENSIONS PRIOR TO
THE START OF CONSTRUCTION

100% REVIEW DRAWINGS
NOT FOR CONSTRUCTION

SCALE VERIFICATION: THIS BAR MEASURES 1" ON ORIGINAL. ADJUST SCALE ACCORDINGLY.

No	Revision	Date	Initial
3	FINAL 100% DESIGN	10/12/10	JJ
2	REISSUED 95% SUBMITTAL	02/01/10	JJ
1	95% SUBMITTAL	12/30/09	JJ

RADIO MATERIALS
ATTICA, INDIANA

GROUNDWATER REMEDIATION SYSTEM

TREATMENT BUILDING
FOUNDATION AND FLOOR PLANS

CONESTOGA-ROVERS & ASSOCIATES

Source Reference:			Date: DECEMBER 2009
Project Manager: S. WANNER	Reviewed By: J. THORNTON	Designed By: L. LEMUNYAN	Drawn By: M. GALLEY
Scale: AS SHOWN	Project No: 19190-10	Report No: 041	Drawing No: ST-01

19190-10(041)ST-BU002 APR 08/2010

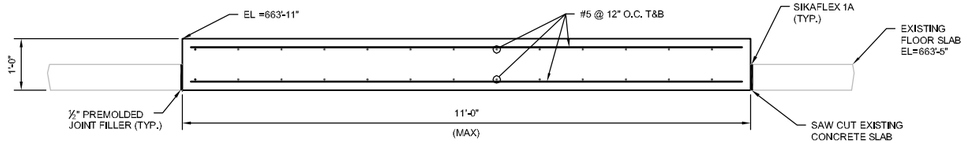

NOTE:
PROVIDE NOTCH IN FOUNDATION FOR TANK DRAIN VALVE.
SEE DWG. ST-01 FOR SIZE AND LOCATION.

SECTION A
3/4"=1'-0" ST-01

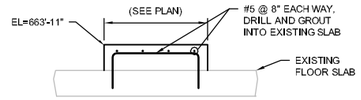

TYPICAL ELECTRICAL EQUIPMENT PAD DETAIL
SCALE: ½"=1'-0"

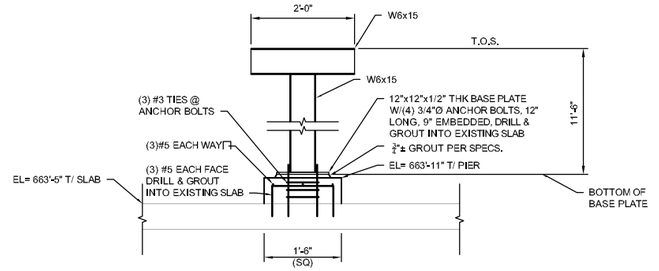

SECTION B
3/4"=1'-0" ST-01

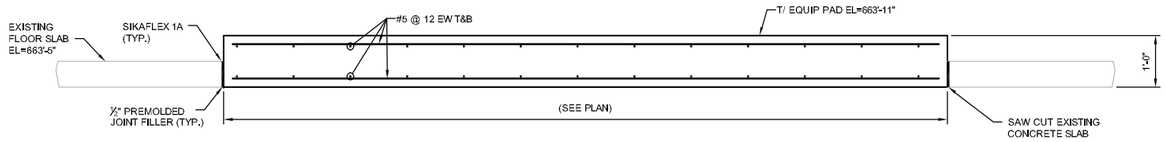

TYPICAL EQUIPMENT PAD DETAIL
SCALE: ½"=1'-0"

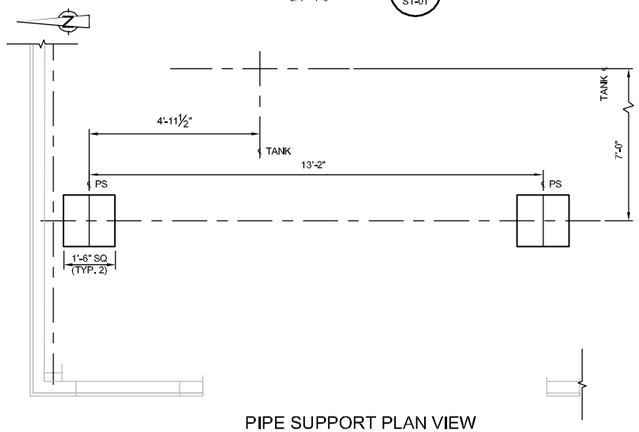

PIPE SUPPORT PLAN VIEW
SCALE: ½"=1'-0"

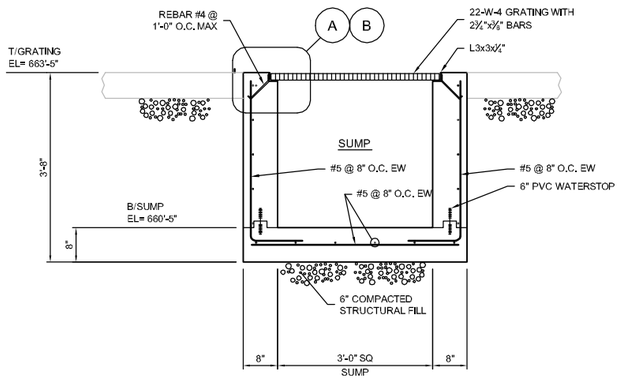

TYPICAL CAST-IN-PLACE SUMP
SCALE: ½"=1'-0"
(OR APPROVED PRE-CAST SUMP AS AN ALTERNATIVE)

SECTION C
3/4"=1'-0" ST-01

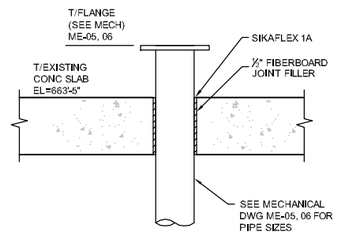

PIPES THRU FLOOR SLAB (TYP 22 PLACES)
SCALE: N.T.S.

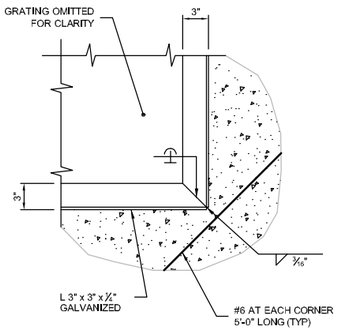

DETAIL A
1 1/2"=1'-0" ST-04

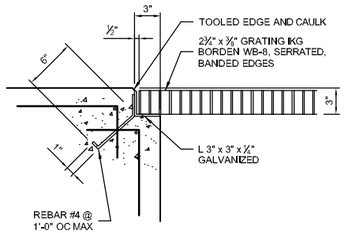

DETAIL B
1 1/2"=1'-0" ST-04

100% REVIEW DRAWINGS
NOT FOR CONSTRUCTION

SCALE VERIFICATION: THIS BAR MEASURES 1" ON ORIGINAL. ADJUST SCALE ACCORDINGLY.

No	Revision	Date	Initial
3	FINAL 100% DESIGN	10/12/10	JJ
2	REISSUED 95% SUBMITTAL	02/01/10	JJ
1	95% SUBMITTAL	12/30/09	JJ

RADIO MATERIALS
ATTICA, INDIANA

GROUNDWATER REMEDIATION SYSTEM

TREATMENT BUILDING
SECTIONS & DETAILS

CONESTOGA-ROVERS & ASSOCIATES

Source Reference:			Date: DECEMBER 2009
Project Manager: S. WANNER	Reviewed By: J. THORNTON	Designed By: L. LEMUNYAN	Drawn By: M. GALLEY
Scale: AS SHOWN	Project No: 19190-10	Report No: 041	Drawing No: ST-02

19190-10(041)ST-BU003 DEC 30/2009

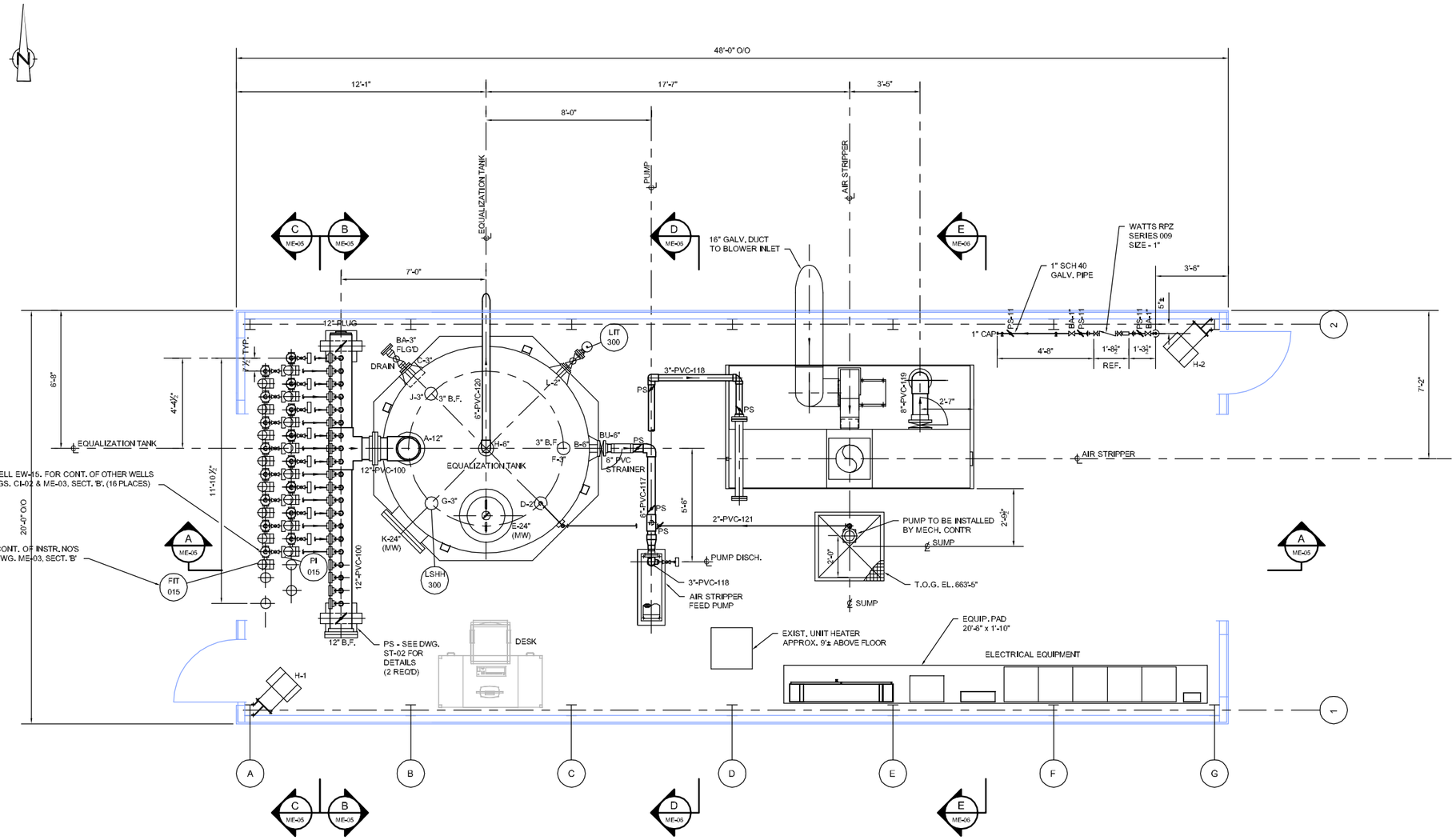

100% REVIEW DRAWINGS
NOT FOR CONSTRUCTION

NOTES:

SCALE VERIFICATION: THIS BAR MEASURES 1" ON ORIGINAL. ADJUST SCALE ACCORDINGLY.

No	Revision	Date	Initial
4	FINAL 100% DESIGN	10/12/10	JJ
3	REISSUED 95% SUBMITTAL	02/01/10	JJ
2	95% SUBMITTAL	12/30/09	JJ
1	PRELIMINARY - FOR REVIEW	11/30/09	JJ

RADIO MATERIALS
ATTICA, INDIANA

GROUNDWATER REMEDIATION SYSTEM

TREATMENT BUILDING
PIPING PLAN

CONESTOGA-ROVERS & ASSOCIATES

Source References			Dates: DECEMBER 2009
Project Manager: S. WANNER	Reviewed By: JJJ	Designed By: JFS	Drawn By: JFS
Scale: 3/8"=1'-0"	Project No: 19190-10	Report No: 041	Drawing No: ME-01

19190-10(041)ME-BU004 APR 14/2010

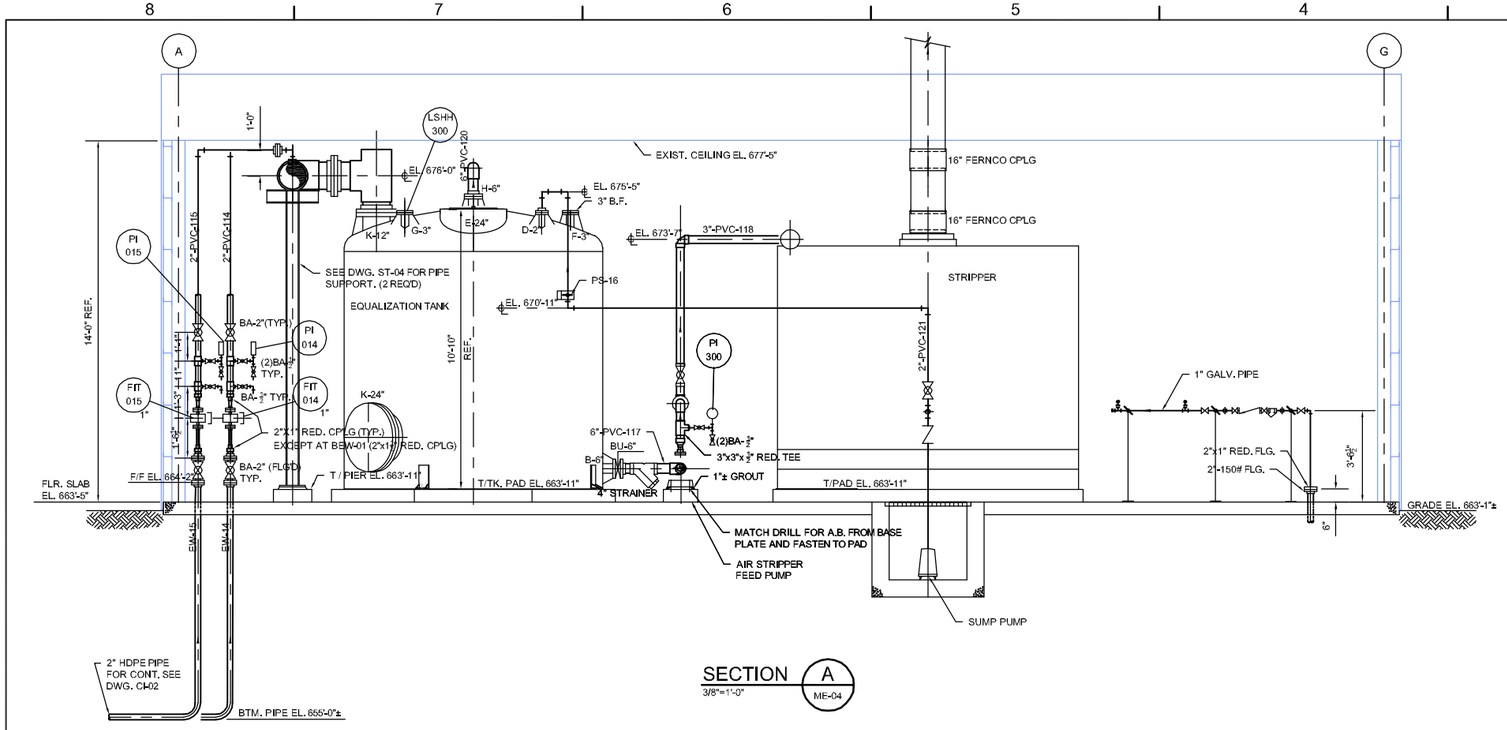

SECTION A
3/8"=1'-0"
ME-04

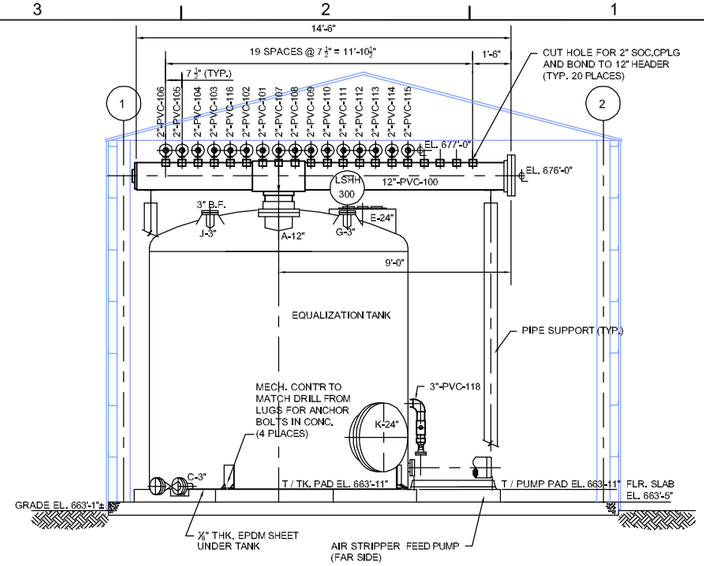

SECTION B
3/8"=1'-0"
ME-04

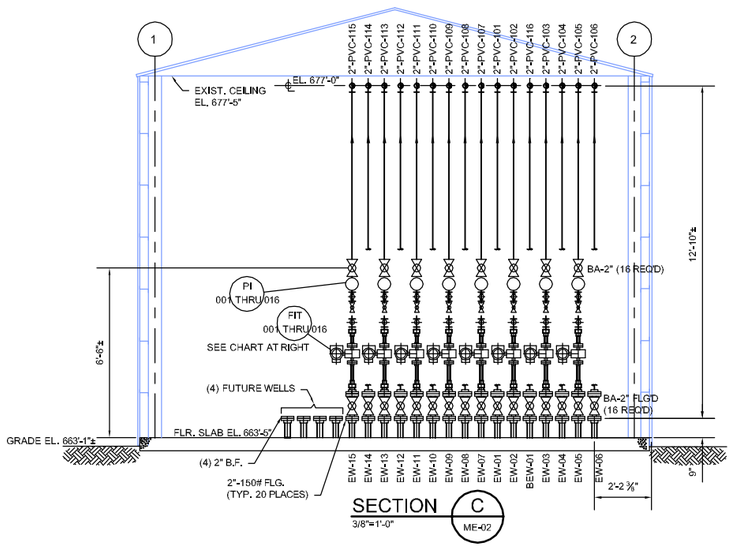

SECTION C
3/8"=1'-0"
ME-02

WELL INSTRUMENT LIST																	
INSTRUMENT I.D	FIT-001	FIT-002	FIT-003	FIT-004	FIT-005	FIT-006	FIT-007	FIT-008	FIT-009	FIT-010	FIT-011	FIT-012	FIT-013	FIT-014	FIT-015	FIT-016
	PI-001	PI-002	PI-003	PI-004	PI-005	PI-006	PI-007	PI-008	PI-009	PI-010	PI-011	PI-012	PI-013	PI-014	PI-015	PI-016
WELL #	EW-01	EW-02	EW-03	EW-04	EW-05	EW-06	EW-07	EW-08	EW-09	EW-10	EW-11	EW-12	EW-13	EW-14	EW-15	BEW-01

100% REVIEW DRAWINGS
NOT FOR CONSTRUCTION

NOTES:

SCALE VERIFICATION: THIS BAR MEASURES 1" ON ORIGINAL. ADJUST SCALE ACCORDINGLY.

No	Revision	Date	Initial
1	FINAL 100% DESIGN	10/12/10	JJ

RADIO MATERIALS
ATTICA, INDIANA

GROUNDWATER REMEDIATION SYSTEM

TREATMENT BUILDING
PIPING SECTIONS

CONESTOGA-ROVERS & ASSOCIATES

Source Reference:			Date: DECEMBER 2009
Project Manager: S. WARNER	Reviewed By: JJJ	Designed By: JFS	Drawn By: JFS
Scale: 3/8"=1'-0"	Project No: 19190-10	Report No: 041	Drawing No: ME-02

19190-10(041)ME-BU004 APR 14/2010

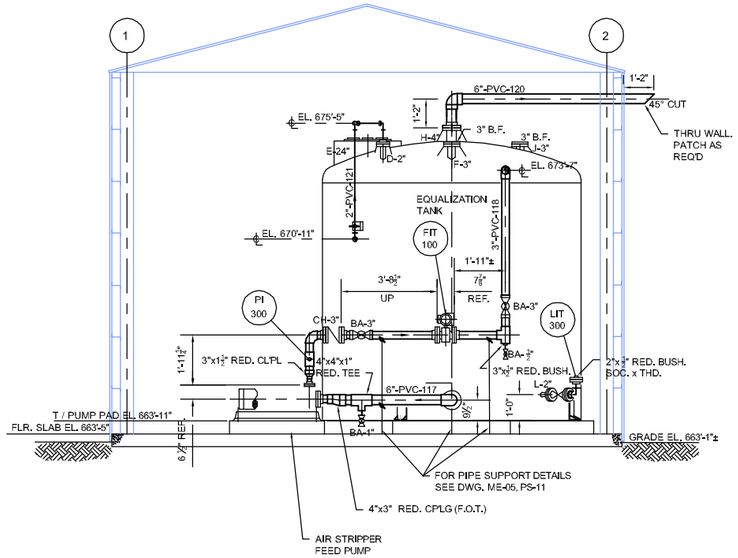

SECTION D (ME-04)
3/8"=1'-0"

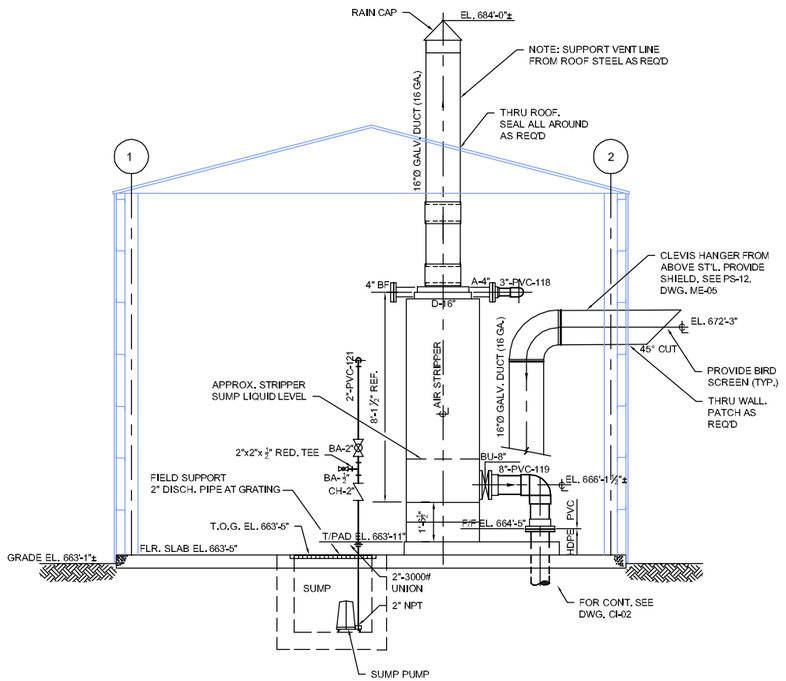

SECTION E (ME-04)
3/8"=1'-0"

100% REVIEW DRAWINGS
NOT FOR CONSTRUCTION

NOTES:

SCALE VERIFICATION: THIS BAR MEASURES 1" ON ORIGINAL. ADJUST SCALE ACCORDINGLY.

No	Revision	Date	Initial
1	FINAL 100% DESIGN	10/12/10	JJ

RADIO MATERIALS
ATTICA, INDIANA

GROUNDWATER REMEDIATION SYSTEM

TREATMENT BUILDING
PIPING SECTIONS

CONESTOGA-ROVERS & ASSOCIATES

Source Reference:			Date: DECEMBER 2009
Project Manager: S. WAGNER	Reviewed By: JJJ	Designed By: JFS	Drawn By: JFS
Scale: 3/8"=1'-0"	Project No: 19190-10	Report No: 041	Drawing No: ME-03

19190-10(041)ME-BU004 APR 14/2010

1. THESE DRAWINGS ARE NOT TO BE USED FOR SHOP FABRICATION DRAWINGS.
2. FIELD CHECK LOCATION OF ALL ATTACHMENTS TO PIPE BEFORE WELDING.
3. ALL ATTACHMENTS WELDED TO PIPE MUST BE OF SAME MATERIAL AS PIPE. WELDMENT PADS ARE REQUIRED FOR ALLOY PIPE WHEN CARBON STEEL SUPPORTS ARE USED.
4. NO WELDING ALLOWED ON VESSEL AFTER STRESS RELIEVING OR AFTER VESSEL IS LINED.
5. ALL PLATES TO BE 3/8" THICK UNLESS OTHERWISE NOTED.
6. BOLTING TO BE ASTM A-325 OR EQUAL.
7. MATERIAL FOR PLATES AND MEMBERS TO BE ASTM A-36 OR EQUAL.
8. BOLT HOLES TO BE 13/16" DIA. FOR 3/4" DIA BOLTS WITH HEX HEADS AND HEX NUTS UNLESS OTHERWISE NOTED.
9. CONTRACTOR IS TO FURNISH ALL NECESSARY BOLTS AND NUTS.
10. HEAVY LOADS SUCH AS VALVES, LINE MOUNTED INSTRUMENTS, ETC. SHOULD BE GIVEN SPECIAL SUPPORT CONSIDERATION. WHENEVER POSSIBLE VALVES AND INSTRUMENTS SHOULD BE LOCATED AS CLOSE TO SUPPORT AS POSSIBLE.
11. IN PLASTIC PIPING SYSTEMS, VALVES AND INSTRUMENTS SHOULD HAVE INDIVIDUAL SUPPORTS WHENEVER POSSIBLE.
12. LOADS AT PUMP SUCTION AND DISCHARGE SHOULD BE HELD TO A MINIMUM BY PROPER PIPE SUPPORT.
13. THE SUPPORT OF ONE PIPE FROM ANOTHER PIPE, EITHER NEW OR EXISTING IS NOT ALLOWED.
14. MECHANICAL CONTRACTOR MUST PROVIDE ALL HOLES REQUIRED FOR PIPE SUPPORTS. ALL HOLES ARE TO BE DRILLED OR PUNCHED, UNLESS OTHERWISE NOTED. BURNING IS NOT ALLOWED.
15. ALL PIPE SUPPORT CONNECTIONS TO BUILDING STRUCTURE ARE TO BE WELDED; CONTINUOUS ON TOP, STITCH WELDED ON THE BOTTOM UNLESS OTHERWISE NOTED.
16. ALL PIPE SUPPORTS INCLUDING HARDWARE AND MISC. STRUCTURAL STEEL MEMBERS ARE TO BE GALVANIZED PER PROJECT SPECS.
17. PIPING SYSTEMS MUST BE PROPERLY SUPPORTED DURING HYDROTESTING.

GENERAL NOTES

PIPE SUPPORT DETAIL
FOR FABRICATION AND INSTALLATION OF PIPE SUPPORTS

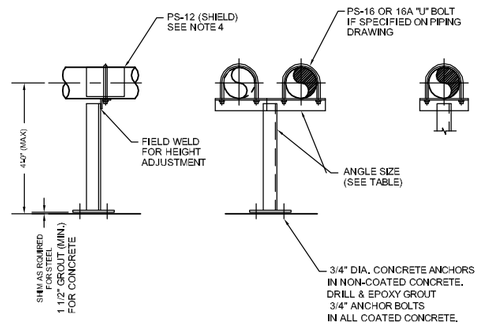

PIPE SIZE	ANGLE SIZE
1" THRU 4"	3" x 3" x 5/16"
6" THRU 12"	4" x 4" x 3/8"

NOTES:

1. SINGLE PIPE TO BE CENTERED ON POST.
2. ALL WELDS TO BE CONTINUOUS.
3. DO NOT SUPPORT ON GRATED FLOOR UNLESS DIRECTLY ABOVE STEEL MEMBER.
4. PROVIDE PS-12 (DETAIL 20) FOR PLASTIC PIPE ONLY.

PS-11

PIPE SUPPORT DETAIL
FOR ALL PIPE THRU 12" DIA.

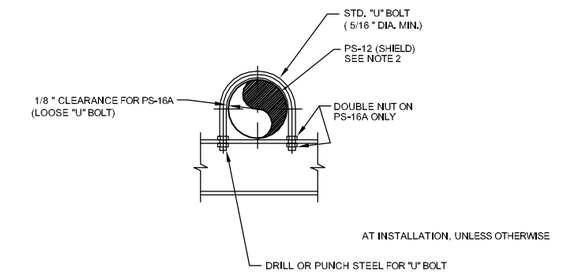

NOTES:

1. DO NOT USE PS-16 FOR 4" AND LARGER BARE STEEL OR BARE LINED STEEL PIPES. USE SHOE TYPE SUPPORTS AS REQUIRED (PS-14,20,24 OR 25).
2. PROVIDE PS-12 (DETAIL 20) FOR PLASTIC PIPE ONLY.

PS-16 (TIGHT "U" BOLT)
PS-16A (LOOSE "U" BOLT)

PIPE SUPPORT DETAIL
FOR BARE AND INSULATED PIPE 1/2 " THRU 24" DIA.

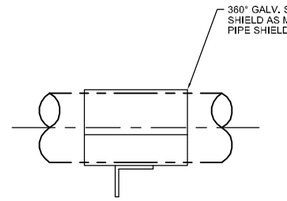

PIPE DATA			
PIPE SIZE	OUTSIDE DIAMETER	SHIELD LENGTH	GAUGE NOTE 2
2	2.38	1'-0"	18
3	3.38	1'-0"	16
4	4.40	1'-0"	16
6	6.5	1'-0"	16
8	8.56	1'-0"	16
10	10.62	1'-0"	16
12	12.75	1'-0"	16
14	14.75	1'-6"	16
16	16.87	1'-6"	12
18	19.00	1'-6"	12
20	21.00	1'-6"	12
24	24.87	2'-0"	12
30	31.00	2'-0"	12
36	36.75	2'-0"	12

NOTES:

1. PROVIDE PS-12 (DETAIL 20) AT ALL PIPE SUPPORT POINTS FOR ALL REINFORCED THERMOSET PLASTIC PIPE.
2. TOP HALF OF SHIELD TO BE 16 GAUGE MAX.

PS-12

PIPE SUPPORT DETAIL
FOR REINFORCED THERMOSET PLASTIC
PIPE SIZES THRU 36" DIAMETER

100% REVIEW DRAWINGS
NOT FOR CONSTRUCTION

SCALE VERIFICATION: THIS BAR MEASURES 1" ON ORIGINAL. ADJUST SCALE ACCORDINGLY.

No	Revision	Date	Initial
4	FINAL 100% DESIGN	10/12/10	JJ
3	REISSUED 95% SUBMITTAL	02/01/10	JJ
2	95% SUBMITTAL	12/30/09	JJ
1	PRELIMINARY - FOR REVIEW	11/30/09	JJ

RADIO MATERIALS
ATTICA, INDIANA

GROUNDWATER REMEDIATION SYSTEM

TREATMENT BUILDING
DETAILS

CONESTOGA-ROVERS & ASSOCIATES

Source Reference:			Date: DECEMBER 2009
Project Manager: S. WANNER	Reviewed By: JJJ	Designed By: JFS	Drawn By: JFS
Scale: 3/8"=1'-0"	Project No: 19190-10	Report No: 041	Drawing No: ME-04

19190-10(041)ME-DU005 DEC 30/2009

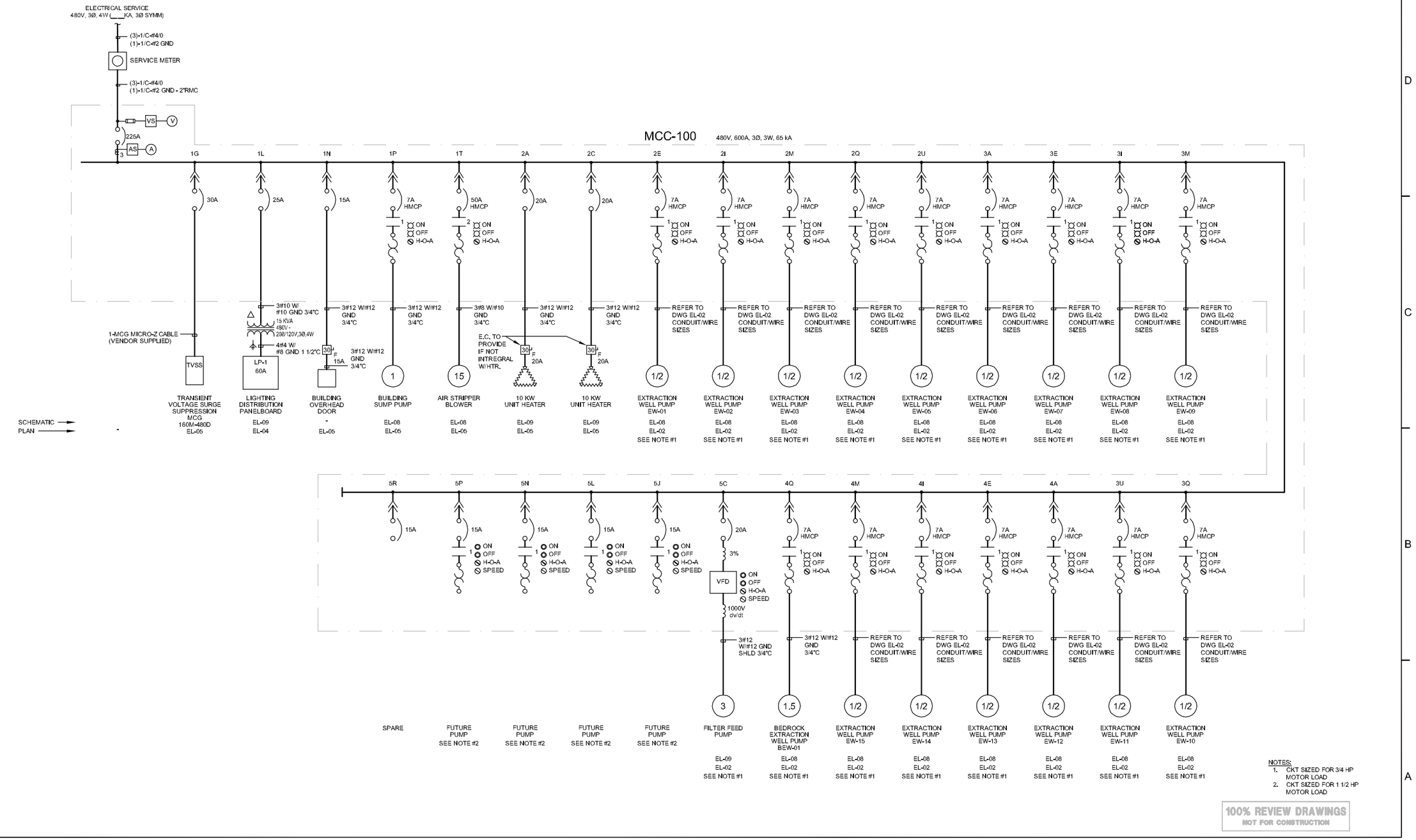

SCALE VERIFICATION: THIS BAR MEASURES 1" ON ORIGINAL. ADJUST SCALE ACCORDINGLY.

No	Revision	Date	Initial
4	FINAL 100% DESIGN	10/12/10	JJ
3	REISSUED 95% SUBMITTAL	02/01/10	JJ
2	95% SUBMITTAL	12/30/09	JJ
1	PRELIMINARY - FOR REVIEW	11/30/09	JJ

RADIO MATERIALS
ATTICA, INDIANA

GROUNDWATER REMEDIATION SYSTEM

ONE LINE DIAGRAM

CONESTOGA-ROVERS & ASSOCIATES

Source Reference:			Dates: DECEMBER 2009
Project Manager: S. WANNER	Reviewed By: B. ELKIN	Designed By: D. SZALACH	Drawn By: J. FAUTLER
Scale: NONE	Project No: 19190-10	Report No: 041	Drawing No: EL-01

19190-10(041)EL-SU001 DEC 30/2009

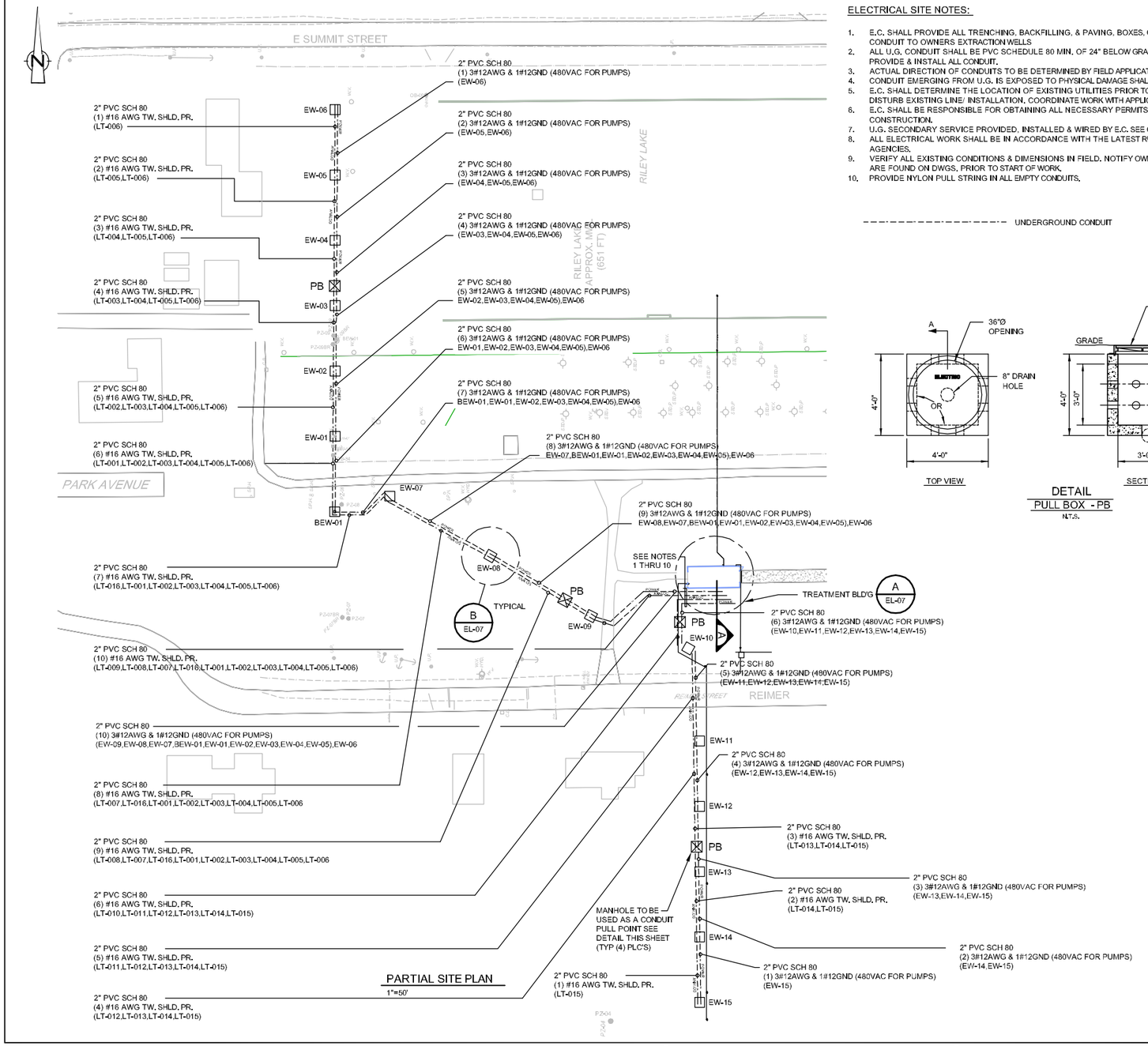

PARTIAL SITE PLAN
1"=50'

ELECTRICAL SITE NOTES:

1. E.C. SHALL PROVIDE ALL TRENCHING, BACKFILLING, & PAVING, BOXES, CONDUITS, ETC. FOR THE INSTALLATION OF U.G. CONDUIT TO OWNERS EXTRACTION WELLS
2. ALL U.G. CONDUIT SHALL BE PVC SCHEDULE 80 MIN. OF 24" BELOW GRADE UNLESS OTHERWISE NOTED. E.C. SHALL PROVIDE & INSTALL ALL CONDUIT.
3. ACTUAL DIRECTION OF CONDUITS TO BE DETERMINED BY FIELD APPLICATION.
4. CONDUIT EMERGING FROM U.G. IS EXPOSED TO PHYSICAL DAMAGE SHALL BE RGS.
5. E.C. SHALL DETERMINE THE LOCATION OF EXISTING UTILITIES PRIOR TO CONSTRUCTION SO THAT THIS WORK WILL NOT DISTURB EXISTING LINE/ INSTALLATION. COORDINATE WORK WITH APPLICABLE UTILITIES.
6. E.C. SHALL BE RESPONSIBLE FOR OBTAINING ALL NECESSARY PERMITS REQUIRED TO BEGIN & PROCEED WITH CONSTRUCTION.
7. U.G. SECONDARY SERVICE PROVIDED, INSTALLED & WIRED BY E.C. SEE ONE LINE DIAGRAM DWG. EL-01.
8. ALL ELECTRICAL WORK SHALL BE IN ACCORDANCE WITH THE LATEST RULES & REGULATIONS OF ALL GOVERNING AGENCIES.
9. VERIFY ALL EXISTING CONDITIONS & DIMENSIONS IN FIELD. NOTIFY OWNER AND/OR ENGINEER IF ANY DISCREPANCIES ARE FOUND ON DWGS. PRIOR TO START OF WORK.
10. PROVIDE NYLON PULL STRING IN ALL EMPTY CONDUITS.

---------- UNDERGROUND CONDUIT

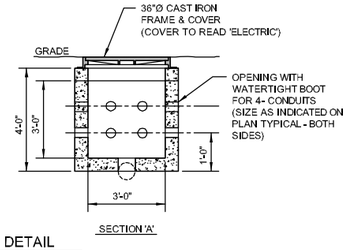

DETAIL
PULL BOX - PB
N.T.S.

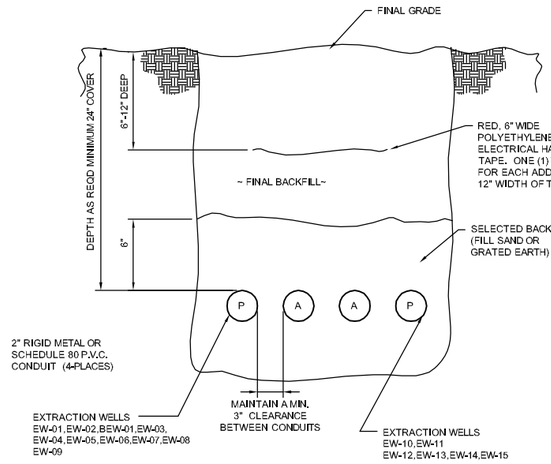

TYPICAL UN-ENCASED DUCT BANK SECTION (A)
SCALE: NTS

NOTE:
FOR TRENCH SECTION SEE DETAIL 2

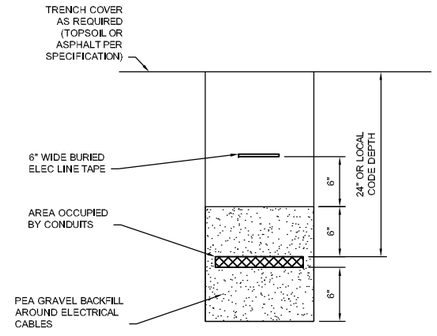

NOTE:
BEDDING DEPTHS TO BE MAINTAINED AT ALL TIMES

ELECTRICAL CABLE TRENCH DETAIL (2)
SCALE: NTS

100% REVIEW DRAWINGS
NOT FOR CONSTRUCTION

SCALE VERIFICATION: THIS BAR MEASURES 1" ON ORIGINAL. ADJUST SCALE ACCORDINGLY.

No	Revision	Date	Initial
3	FINAL 100% DESIGN	10/12/10	JJ
2	REISSUED 95% SUBMITTAL	02/01/10	JJ
1	95% SUBMITTAL	12/30/09	JJ

RADIO MATERIALS
ATTICA, INDIANA

GROUNDWATER REMEDIATION SYSTEM

ELECTRICAL
SITE PLAN

CONESTOGA-ROVERS & ASSOCIATES

Source Reference:			Date: DECEMBER 2009
Project Manager: S. WANNER	Reviewed By: B. ELKIN	Designed By: P. DIFRANCISCO	Drawn By: P. DIFRANCISCO
Scale: AS SHOWN	Project No: 19190-10	Report No: 041	Drawing No: EL-02

19190-10(041)EL-SU002 DEC 30/2009

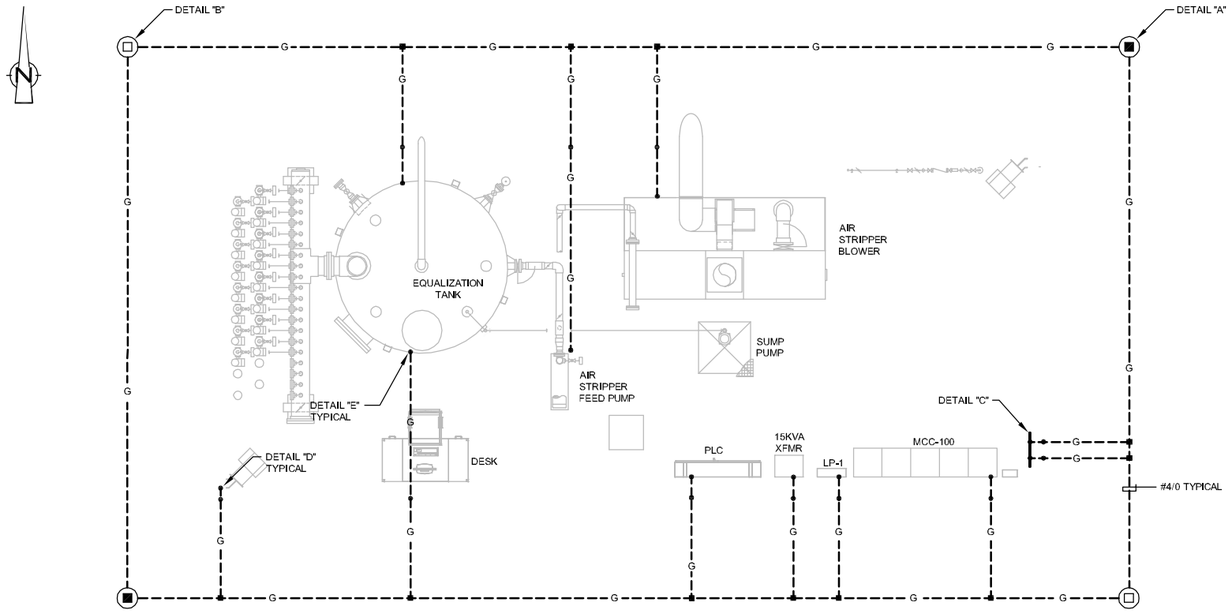

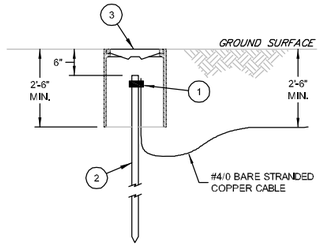

1	CONNECTOR:	BURNDY CAT. No. GAR-6426 (1 CABLE) OR GP6426 (2 CABLES)
2	GROUND ROD:.	COPPERWELD, 3/4" DIA. x 10' LG.
3	INSPECTION WELL:	KISTNER PULL-BOX W/CAST IRON FRAME & COVER 15" DIA. x 20" LG., PART No. PB-15S

DETAIL A
GROUNDING ROD INSTALLATION - INSPECTION TYPE
N.T.S.

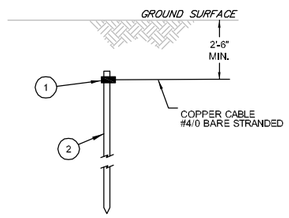

1	CONNECTOR:	BURNDY CAT. No. GAR-6426 (1 CABLE) OR GP6426 (2 CABLES)
2	GROUND ROD:.	COPPERWELD, 3/4" DIA. x 10' LG.

DETAIL B
GROUNDING ROD INSTALLATION - BURIED TYPE
N.T.S.

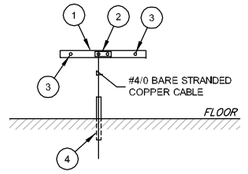

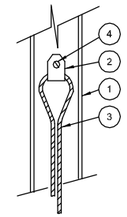

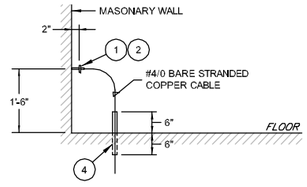

1	COPPER BUS:	3/8" x 2" x 24" WITH 9/16" DIA. HOLES, PREDRILLED TO ACCOMMODATE CONNECTORS AND MOUNTING BOLTS
2	CONNECTOR TO FLAT BAR:	BURNDY CAT. No. GB26
3	MOUNTING:	1/2" x 2 1/2" GALVANIZE. BOLT; 3/4" x 2" GALVANIC. PIPE SPACER; LEAD CLINCH SPACER
4	SLEEVE:	PVC SCH. 80 CONDUIT, 1 1/4" DIA. MIN.

DETAIL C
GROUND BUS INSTALLATION
N.T.S.

(DETAIL SIMILAR - NO SLEEVE THRU FLOOR)

1	COLUMN (SHOWN) OR BEAM
2	GROUNDING CONNECTOR, CONDUCTOR TO FLAT BAR, BURNDY GB OR GC.
3	GROUNDING CONDUCTOR (SIZE PER PLAN)
4	MOUNTING HOLE, DRILL IN CENTER OF WEB, SIZE TO SUIT BOLT.

DETAIL D
GROUNDING - TYPICAL CONNECTIONS TO STRUCTURAL STEEL
N.T.S.

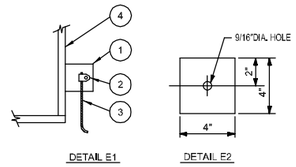

DETAIL E1 DETAIL E2

1	WELDED TAB, 1/4x4" STEEL. SEE DETAILS E1 AND E2 FOR DIMENSIONS. WELD TO TOP OR SIDE OF PIPE, POST, TANK LEG OR EQUIPMENT, NOT ON BOTTOM. DO NOT WELD TO LINED PIPE OR EQUIPMENT.
2	GROUNDING CONNECTOR, CONDUCTOR TO FLAT BAR, BURNDY GB OR GC
3	GROUNDING CONDUCTOR (SIZE PER PLAN)
4	EQUIPMENT

DETAIL E
GROUNDING - TYPICAL WELDED TAB CONNECTION
N.T.S.

NOTES

1. ALL GROUND WIRE SHALL BE SIZE #4/0 COPPER (BARE FOR BURIED AND THHN/THWN GREEN INSULATION FOR EXPOSED) UNLESS OTHERWISE NOTED.
2. COMPRESSION CONNECTION SHALL BE ACCEPTABLE METHOD OF CONNECTION OR SPLICING OF CABLE.
3. ALL HARDWARE SHALL BE EVERDUR OR SILICON BRONZE SIZED TO SUIT.
4. GROUND CABLES INSIDE BUILDING SHALL BE RUN SO THAT THEY DO NOT CONSTITUTE A TRIPPING HAZARD.
5. ROUTE CABLE ALONG SUPPORT STEEL AS REQUIRED.

LEGEND

G	BARE GROUND CONDUCTOR - BURIED 30" BELOW GRADE
G	INSULATED GROUND CONDUCTOR - RUN EXPOSED
	GROUND CONNECTOR - COMPRESSION TYPE BURNDY YGHC-C, SIZE TO SUIT.

100% REVIEW DRAWINGS
NOT FOR CONSTRUCTION

SCALE VERIFICATION: THIS BAR MEASURES 1" ON ORIGINAL. ADJUST SCALE ACCORDINGLY.

No	Revision	Date	Initial
3	FINAL 100% DESIGN	10/12/10	JJ
2	REISSUED 95% SUBMITTAL	02/01/10	JJ
1	95% SUBMITTAL	12/30/09	JJ

RADIO MATERIALS
ATTICA, INDIANA

GROUNDWATER REMEDIATION SYSTEM

TREATMENT BUILDING GROUNDING PLAN & DETAILS

CONESTOGA-ROVERS & ASSOCIATES

Source Reference:			Date: DECEMBER 2009
Project Manager: S. WANNER	Reviewed By: B. ELKIN	Designed By: P. DIFRANCISCO	Drawn By: P. DIFRANCISCO
Scale: 1/4"=1'-0"	Project No: 19190-10	Report No: 041	Drawing No: EL-03

19190-10(041)EL-BU003 DEC 30/2009

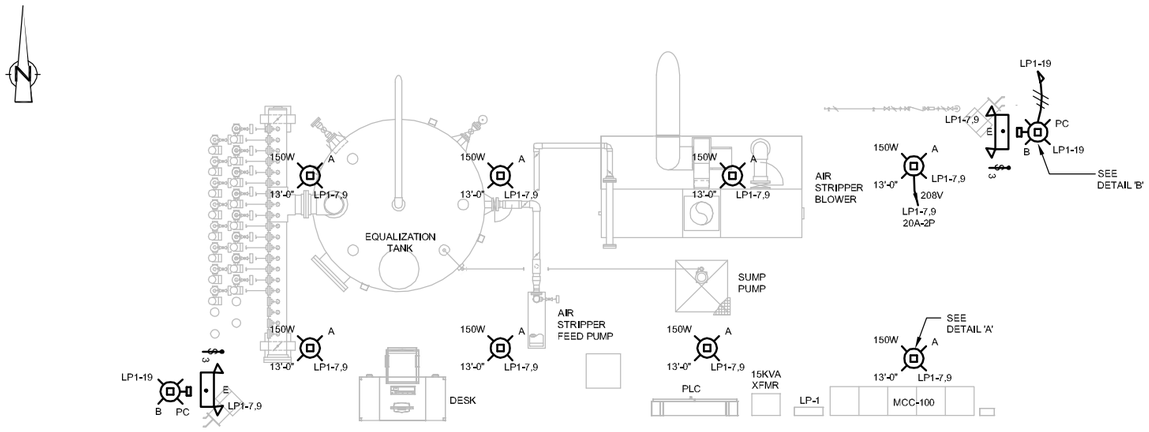

LIGHTING GENERAL NOTES

1. FINISHED FL ELEVATION IS APPROXIMATELY 663'-6" .
2. ALL CONDUIT TO BE RIGID (RGS), EXCEPT AS NOTED. MINIMUM CONDUIT SIZE TO BE 3/4".
3. EXPOSED CONDUIT TO BE SUPPORTED EVERY 10'-0" MINIMUM (RMC) AND SHALL BE INSTALLED IN A MANNER SUCH THAT THEY DO NOT CONSTITUTE A TRIPPING HAZARD OR INFRINGE UPON THE 8'-0" MINIMUM HEAD CLEARANCE.
4. ALL WALL-THRU CONDUIT PENETRATIONS TO BE WEATHER SEALED WITH APPROVED SILICONE SEALER.
5. ALL LIGHTING WIRING TO BE No. 12 AWG THHN, UNLESS OTHERWISE NOTED.
6. EACH LIGHTING CIRCUIT SHALL BE PROVIDED WITH A DEDICATED NEUTRAL.
7. ALL WIRE SHALL BE TAGGED WITH APPROPRIATE CIRCUIT NUMBERS AT BOTH TERMINAL ENDS.
8. SUPPORTS AND HANGERS: ALL EQUIPMENT/DEVICE/FIXTURE SUPPORTS AND HANGERS SHALL BE HOT DIPPED GALVANIZED STEEL ANGLE OR CHANNEL OR PIPE OR OTHER STRUCTURAL SHAPE OF 1/4" THICK MINIMUM. DO NOT USE RNC CONDUIT AS EQUIPMENT/DEVICE/FIXTURE SUPPORTING MEMBER.

LEGEND

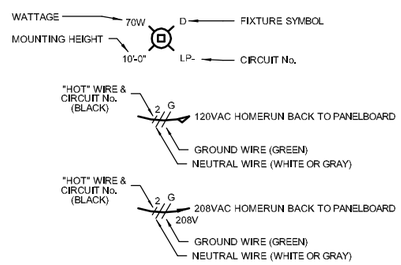

LIGHTING LEGEND

SYMBOL	DESCRIPTION
A	HUBBELL 208V LIGHTING FIXTURE-PULSE START METAL HALIDE-150W CAT. #LWJ-150H8-A-WH MOUNTING HEIGHT TO BE 13'-0" BOF SEE DETAIL A. TOTAL VA INPUT 185VA OR EQUAL.
B PC	HUBBELL 120V WALL-PAK LIGHTING FIXTURE-METAL HALIDE-100W CAT. #PRS3150P18BZOSSLPBT-1 TO INCLUDE PHOTO CONTROL MOUNTING HEIGHT : SEE DETAIL B. TOTAL VA INPUT 150VA OR EQUAL.
E	HOLOPHANE 208V COMBO EMERGENCY LIGHTING & LED EXIT SIGN CAT. #MSTDLNCWWRS2 MOUNTING HEIGHT TO BE 8'-0"BOF UNLESS NOTED OTHERWISE ON PLAN OR EQUAL.
3	HUBBELL THREE WAY LIGHTING TOGGLE SWITCH, 20A, 208V CAT. #1223. MOUNTED IN BOX #6080 W/COVER #95071 TO BE MOUNTED 4'-6" AFF UNLESS NOTED OTHERWISE ON PLAN OR EQUAL.

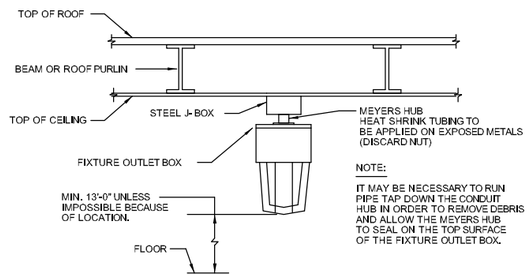

DETAIL A
SURFACE MOUNTED FIXTURE
N.T.S.

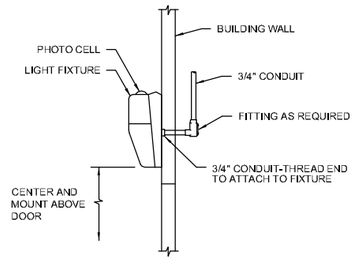

DETAIL B
WALL MOUNTED OUTDOOR FIXTURE
N.T.S.

LIGHTING PANEL "LP-1" SCHEDULE
208/120V, 60Hz, 3Ø, 4 WIRE

SERVICE DESCRIPTION	#	WATTS	WIRE SIZE	CKT. NO.	BRANCH CB	A B C N	BRANCH CB	CKT. NO.	WIRE SIZE	WATTS	#	SERVICE DESCRIPTION
TVSS		*	12	1	20A		20A	2	12	1000	1	PLC CONTROL PANEL
		*	12	3	20A		20A	4	*	*		SPARE
		*	12	5	20A		20A	6	*	*		SPARE
TREATMENT BUILDING LIGHTS	8	1480	12	7	20A		20A	8	*	*		SPARE
				9	20A		20A	10	*	*		SPARE
RECEPTACLES	3	900	12	11	20A		20A	12	12	1000		PLC CONTROL PNL - 120V FIELD DEVICES
RECEPTACLES	3	900	12	13	20A		20A	14	12	1000		PLC CONTROL PNL - 120V FIELD DEVICES
EXHAUST FAN EF-1 (1/3 HP)	1	900	12	15	15A		20A	16	12	200		VERBATM GATEWAY
EXTERIOR RECEPTACLES	4	800	12	17	20A		20A	18	*	*		SPARE
EXTERIOR LIGHTS	2	300	12	19	20A		20A	20	*	*		SPARE
						N G						

PANEL MTD.:	SURFACE	ENCLOSURE:	NEMA 12
MANUFACTURER:	SQUARE-D	TYPE:	NQOD
MAIN BREAKER:	60A (QOB)	MAIN LUGS:	100A
FEEDER SIZE:	4#4 & 1#8 GND	FEEDER ENTRY:	TOP

T.C.L. - 72.3 AMPS / 8.66KVA

100% REVIEW DRAWINGS
NOT FOR CONSTRUCTION

SCALE VERIFICATION: THIS BAR MEASURES 1" ON ORIGINAL. ADJUST SCALE ACCORDINGLY.

No	Revision	Date	Initial
3	FINAL 100% DESIGN	10/12/10	JJ
2	REISSUED 95% SUBMITTAL	02/01/10	JJ
1	95% SUBMITTAL	12/30/09	JJ

RADIO MATERIALS
ATTICA, INDIANA

GROUNDWATER REMEDIATION SYSTEM

TREATMENT BUILDING LIGHTING PLAN & DETAILS

CONESTOGA-ROVERS & ASSOCIATES

Source Reference:			Date: DECEMBER 2009
Project Manager: S. WARNER	Reviewed By: B. ELKIN	Designed By: P. DIFRANCISCO	Drawn By: P. DIFRANCISCO
Scale: 1/4"=1'-0"	Project No: 19190-10	Report No: 041	Drawing No: EL-04

19190-10(041)EL-BU004 DEC 30/2009

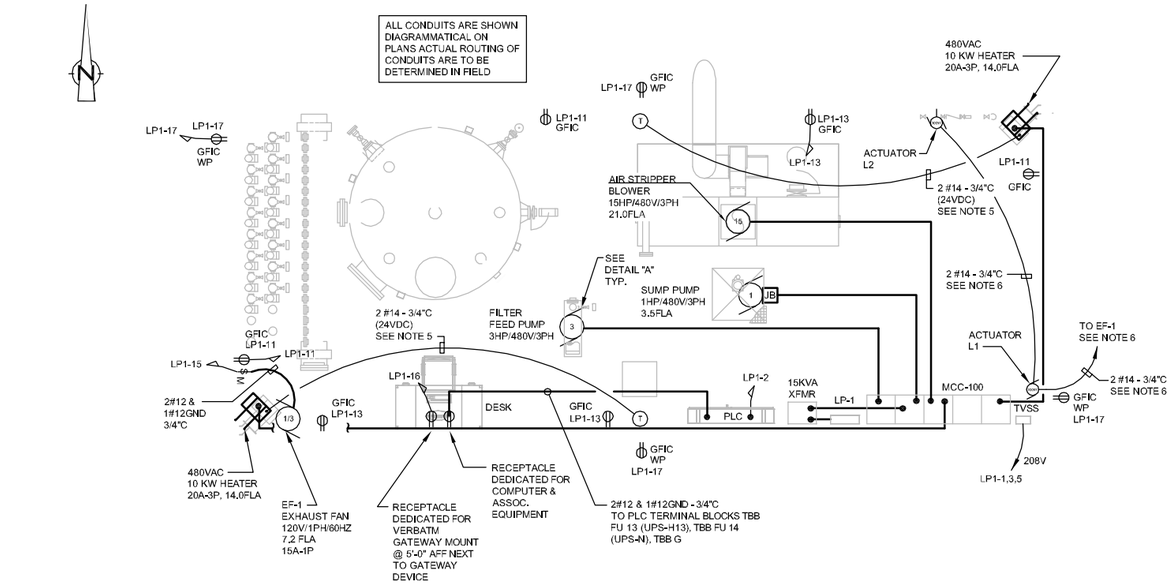

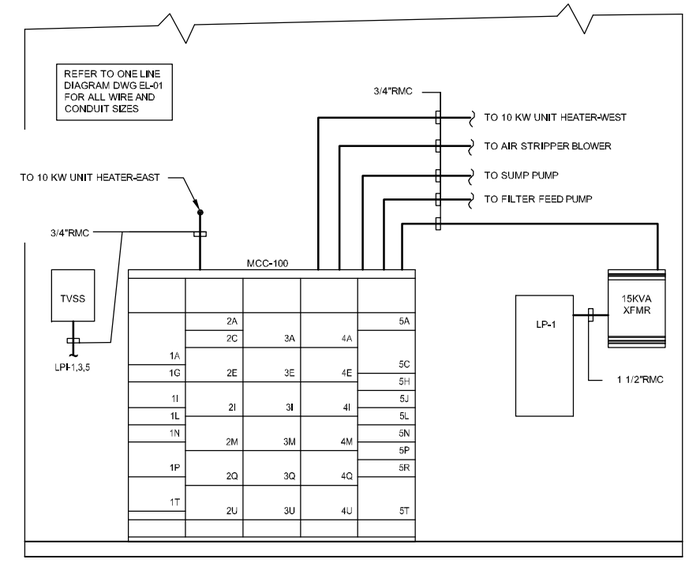

SOUTH ELEVATION
SCALE: 1/2"=1'-0"

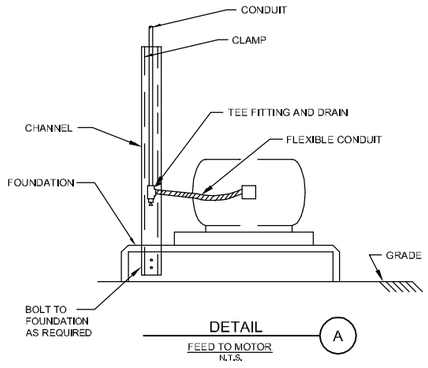

DETAIL A
FEED TO MOTOR
N.T.S.

NOTES

1. ALL CONDUIT TO BE RIGID (RGS), EXCEPT AS NOTED. MINIMUM CONDUIT SIZE TO BE 3/4".
2. CONDUIT TO BE SUPPORTED EVERY 10'-0" MINIMUM (RGS) AND SHALL BE INSTALLED IN A MANNER SUCH THAT THEY DO NOT CONSTITUTE A TRIPPING HAZARD OR INFRINGE UPON THE 8'-0" MINIMUM HEAD CLEARANCE.
3. ALL WALL-THRU CONDUIT PENETRATIONS TO BE WEATHER SEALED WITH APPROVED SEALER.
4. ALL WIRE SHALL BE TAGGED WITH APPROPRIATE CIRCUIT NUMBERS AT BOTH TERMINAL ENDS.
5. CONTRACTOR SHALL STAGE UNIT HEATER THERMOSTAT(S) AS FOLLOWS:
   ONLY (1) UNIT HEATER WILL OPERATE UNTIL BUILDING TEMPERATURE FALLS BELOW 45 DEG. THEN BOTH HEATERS WILL PROVIDE HEAT AND MAINTAIN A SUITABLE TEMPERATURE INSIDE BUILDING. CONTRACTOR SHALL COORDINATE WITH OWNER FOR APPROVED OPERATING TEMPERATURES.
6. CONTRACTOR SHALL INTERFACE ACTUATORS L1 & L2 INTO EF-1 EXHAUST FAN STARTING CIRCUIT. ACTUATORS SHALL OPEN WHEN EF-1 IS OPERATING & CLOSE WHEN OFF.

LEGEND

- M — MANUAL MOTOR STARTER 120V, 20A HEAVY DUTY HUBBELL OR EQUAL
- JB — PROVIDE NEMA 12 JUNCTION BOX SIZED TO SUIT FIELD CONDITIONS TO INCLUDE POWER TERMINAL BLOCKS FOR TERMINATION OF CABLE PROVIDED BY SUMP PUMP MANUF AND PUMP FEEDER (4#12AWG) AS INDICATED ON PLAN & ONE LINE DIAGRAM
- TVSS — MCG 160M-480D
- LP1 — SQ-D NQOD NEMA 12, 100A MAINS, 30 CKT, W/60A-3P M.C.B. OR EQUAL
- 480V/3PH/60HZ 10 KW UNIT HEATER 14.0 FLA
- XFMR — SQ-D CLASS 7400 EE WATCHDOG 15KVA TRANSFORMER 80 DEG C RISE 480V DELTA PRIMARY 208/120V SECONDARY 60HZ CAT# EE15T3HB.
- SQ-D CLASS 3110 HEAVY DUTY SAFETY SWITCH 600V 30A FUSIBLE 3-WIRE NEMA 12 RATED CAT #H361RB, COMPLETE W/ (3) FUSES SIZED PER MOTOR DATA NAMEPLATE
- M — MOTOR (HP INDICATED ON PLAN)
- GFIC — HUBBELL GROUND FAULT INTERRUPTER DUPLEX RECEPTACLE, 20A, 125V, 3-WIRE, GROUNDED , MOUNTED IN STEEL BOX AND COVER TO BE MOUNTED 4'-0" AFF UNLESS NOTED OTHERWISE ON PLAN OR EQUAL.
- GFIC WP — HUBBELL WEATHER PROOF GROUND FAULT INTERRUPTER DUPLEX RECEPTACLE, 20A, 125V, 3-WIRE, GROUNDED MOUNTED IN A STEEL OUTDOOR RATED BOX AND COVER TO BE MOUNTED 4'-0" AFG UNLESS NOTED OTHERWISE ON PLAN OR EQUAL.
- T — THERMOSTAT

"HOT" WIRE & CIRCUIT No. (BLACK) — 2, G — 120VAC HOMERUN BACK TO PANELBOARD
GROUND WIRE (GREEN)
NEUTRAL WIRE (WHITE OR GRAY)

"HOT" WIRE & CIRCUIT No. (BLACK) — 2, G — 208VAC HOMERUN BACK TO PANELBOARD 208V
GROUND WIRE (GREEN)
NEUTRAL WIRE (WHITE OR GRAY)

100% REVIEW DRAWINGS
NOT FOR CONSTRUCTION

SCALE VERIFICATION: THIS BAR MEASURES 1" ON ORIGINAL. ADJUST SCALE ACCORDINGLY.

No	Revision	Date	Initial
3	FINAL 100% DESIGN	10/12/10	JJ
2	REISSUED 95% SUBMITTAL	02/01/10	JJ
1	95% SUBMITTAL	12/30/09	JJ

RADIO MATERIALS
ATTICA, INDIANA

GROUNDWATER REMEDIATION SYSTEM

TREATMENT BUILDING
POWER PLAN

CONESTOGA-ROVERS & ASSOCIATES

Source Reference:			Date: DECEMBER 2009
Project Manager: S. WARNER	Reviewed By: B. ELKIN	Designed By: P. DIFRANCISCO	Drawn By: P. DIFRANCISCO
Scale: 1/4"=1'-0"	Project No: 19190-10	Report No: 041	Drawing No: EL-05

19190-10(041)EL-BU005 DEC 30/2009

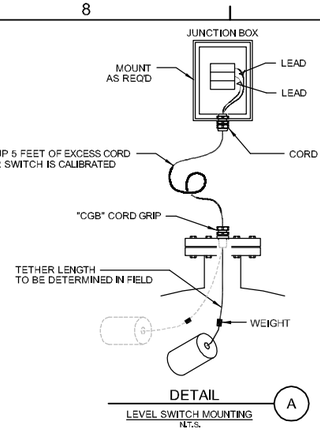

DETAIL A
LEVEL SWITCH MOUNTING
N.T.S.

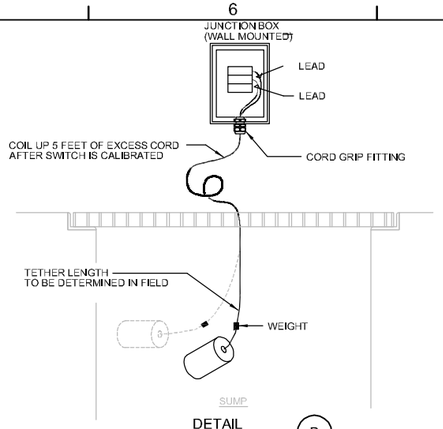

DETAIL B
WEIGHTED LEVEL SWITCH
N.T.S.

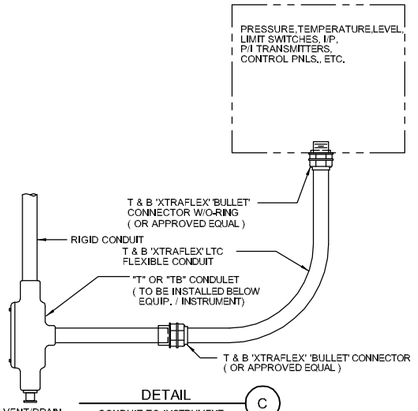

DETAIL C
CONDUIT TO INSTRUMENT
N.T.S.

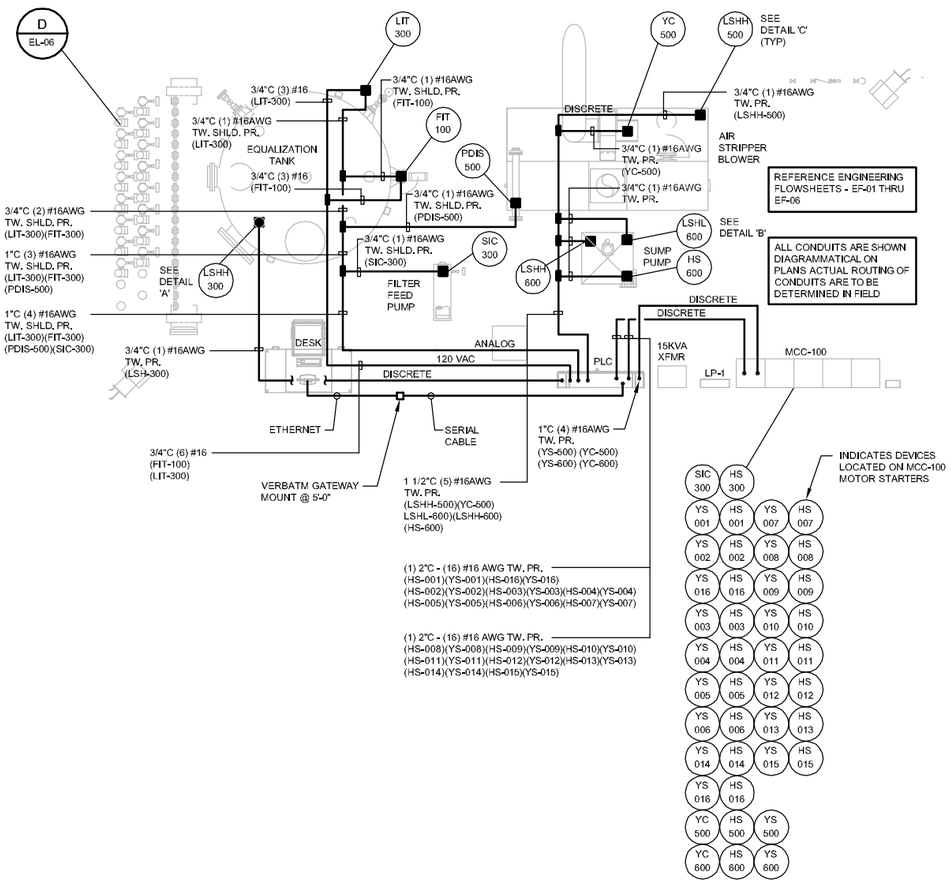

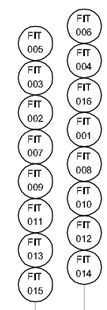

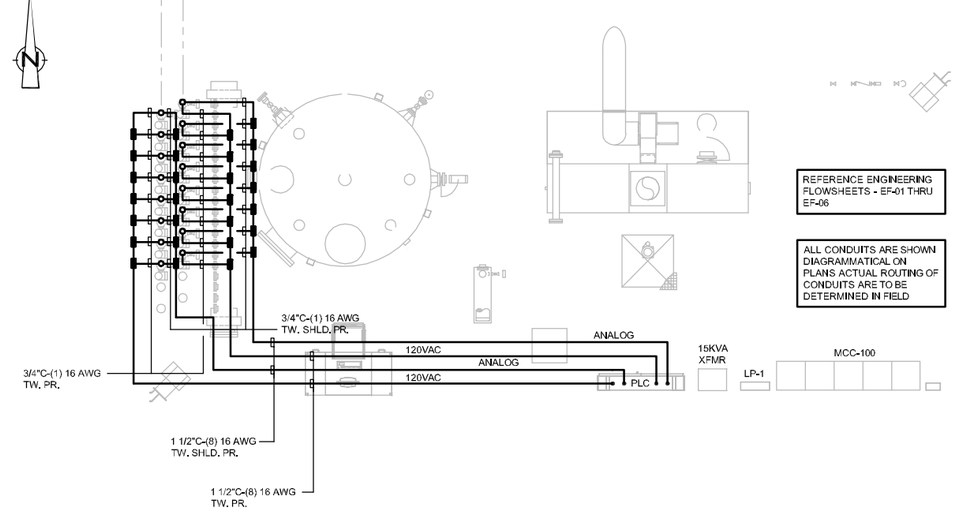

DETAIL D
FIT-XXX POWER & ANALOG WIRING
1/4"=1'-0"

REFERENCE ENGINEERING FLOWSHEETS - EF-01 THRU EF-06

ALL CONDUITS ARE SHOWN DIAGRAMMATICAL ON PLANS ACTUAL ROUTING OF CONDUITS ARE TO BE DETERMINED IN FIELD

REFERENCE ENGINEERING FLOWSHEETS - EF-01 THRU EF-06

ALL CONDUITS ARE SHOWN DIAGRAMMATICAL ON PLANS ACTUAL ROUTING OF CONDUITS ARE TO BE DETERMINED IN FIELD

100% REVIEW DRAWINGS
NOT FOR CONSTRUCTION

SCALE VERIFICATION: THIS BAR MEASURES 1" ON ORIGINAL. ADJUST SCALE ACCORDINGLY.

No	Revision	Date	Initial
3	FINAL 100% DESIGN	10/12/10	JJ
2	REISSUED 95% SUBMITTAL	02/01/10	JJ
1	95% SUBMITTAL	12/30/09	JJ

RADIO MATERIALS
ATTICA, INDIANA

GROUNDWATER REMEDIATION SYSTEM

TREATMENT BUILDING INSTRUMENT PLAN & DETAILS

CONESTOGA-ROVERS & ASSOCIATES

Source Reference:			Date: DECEMBER 2009
Project Manager: S. WANNER	Reviewed By: B. ELKIN	Designed By: P. DIFRANCISCO	Drawn By: P. DIFRANCISCO
Scale: 1/4"=1'-0"	Project No: 19190-10	Report No: 041	Drawing No: EL-06

19190-10(041)EL-BU006 JAN 27/2010

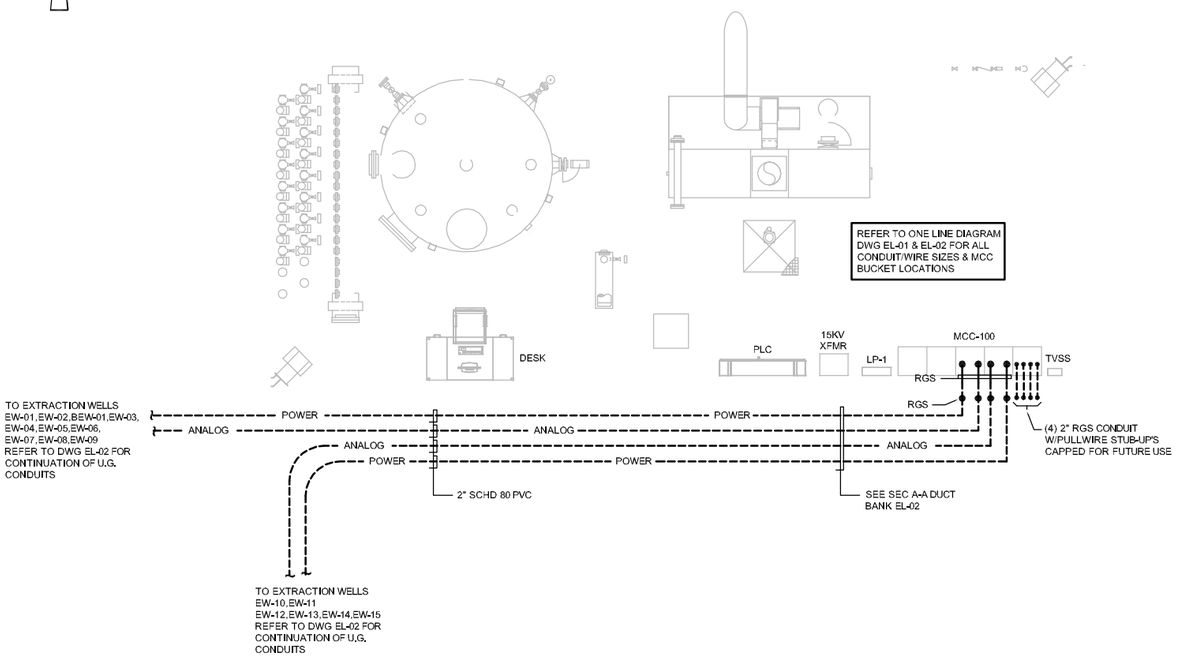

PARTIAL PLAN - TREATMENT BUILDING
1/4"=1'-0"

DETAIL A
3/8"=1'-0"

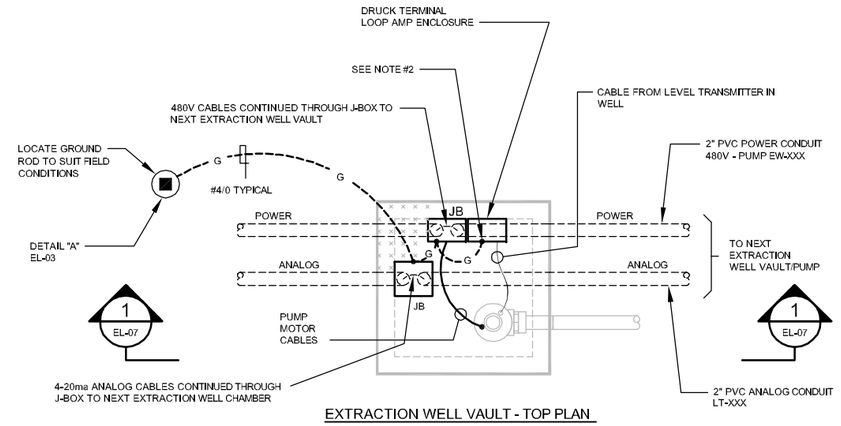

EXTRACTION WELL VAULT - TOP PLAN
1"=1'-0"

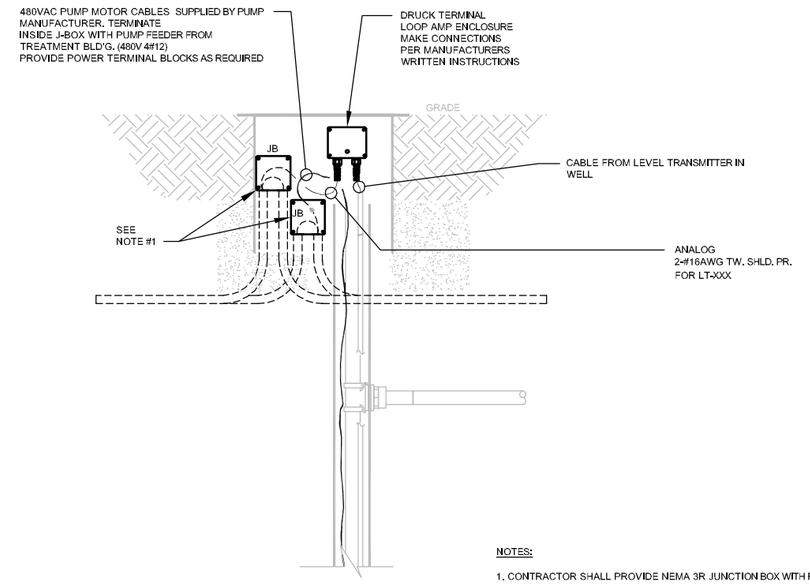

SECTION 1
1"=1'-0"

NOTES:

1. CONTRACTOR SHALL PROVIDE NEMA 3R JUNCTION BOX WITH REMOVABLE COVER SIZED TO SUIT FIELD CONDITIONS TO INCLUDE TERMINAL BLOCKS FOR TERMINATION OF POWER & CONTROL CIRCUITS AS REQUIRED.

2. PROVIDE #4/0 AWG COPPER GROUND WIRE AND PROVIDE GROUNDING BETWEEN J-BOXES,INSTRUMENTATION EQUIPMENT. CONTRACTOR SHALL GROUND ALL OTHER ELECTRICAL EQUIPMENT PER NEC.

DETAIL B
1"=1'-0"

100% REVIEW DRAWINGS
NOT FOR CONSTRUCTION

SCALE VERIFICATION: THIS BAR MEASURES 1" ON ORIGINAL. ADJUST SCALE ACCORDINGLY.

No	Revision	Date	Initial
3	FINAL 100% DESIGN	10/12/10	JJ
2	REISSUED 95% SUBMITTAL	02/01/10	JJ
1	95% SUBMITTAL	12/30/09	JJ

RADIO MATERIALS
ATTICA, INDIANA

GROUNDWATER REMEDIATION SYSTEM

ELECTRICAL DETAILS

CONESTOGA-ROVERS & ASSOCIATES

Source Reference:			Date: DECEMBER 2009
Project Manager: S. WANNER	Reviewed By: B. ELKIN	Designed By: P. DIFRANCISCO	Drawn By: P. DIFRANCISCO
Scale: AS SHOWN	Project No: 19190-10	Report No: 041	Drawing No: EL-07

19190-10(041)EL-BU007 DEC 30/2009

8 7 6 5 4 3 2 1

D C B A

TREATMENT BUILDING

PLC CONTROL PANEL	COMBINATION STARTER IN MCC-100	FIELD

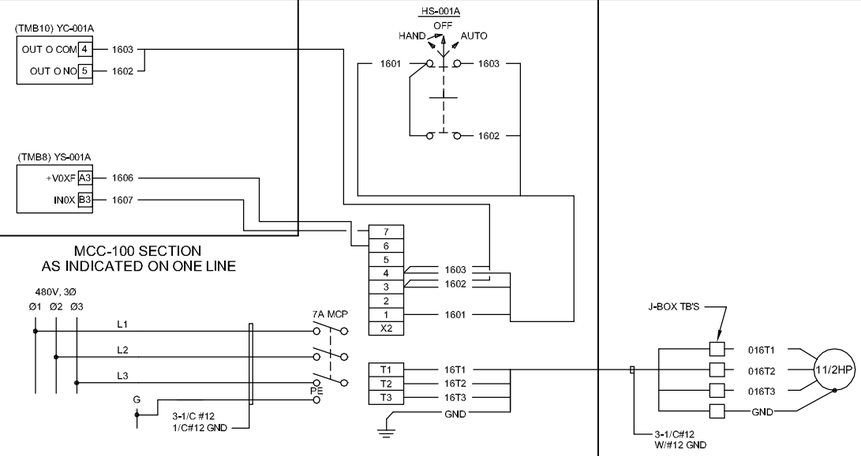

WIRING DIAGRAM

SCHEMATIC DIAGRAM

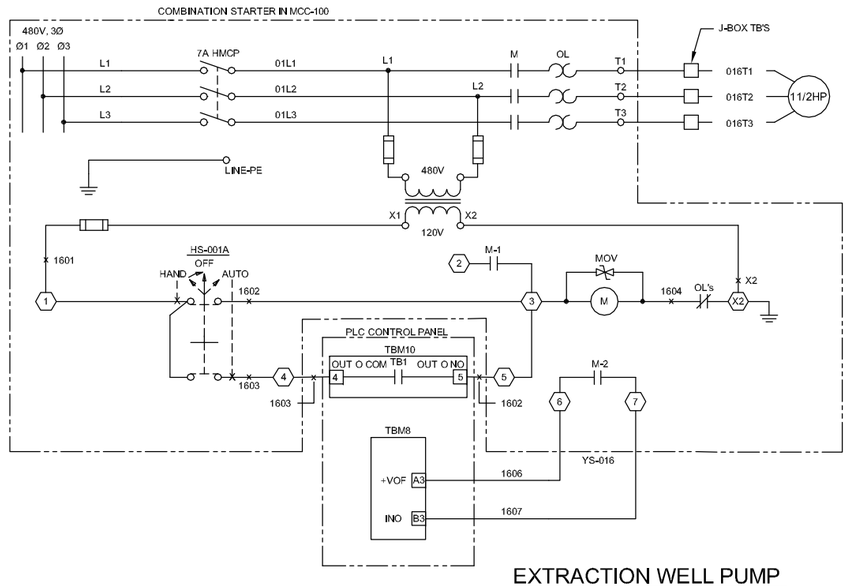

EXTRACTION WELL PUMP
BEW-01

TREATMENT BUILDING

PLC CONTROL PANEL	COMBINATION STARTER IN MCC-100	FIELD

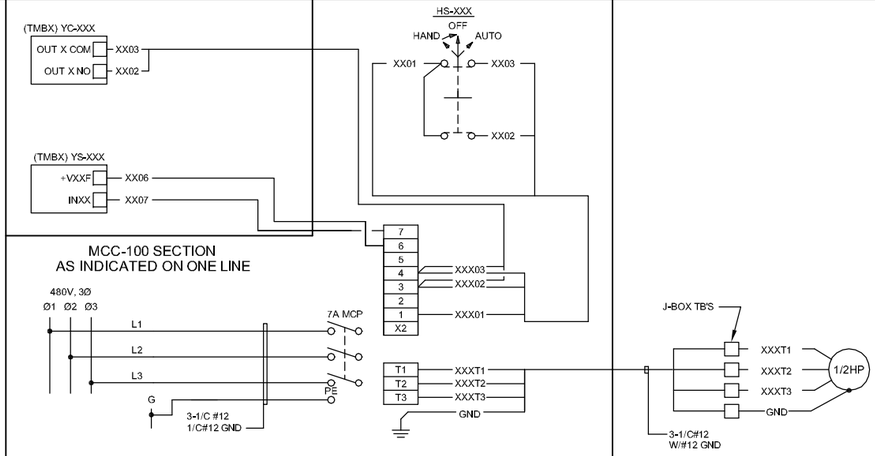

WIRING DIAGRAM

SCHEMATIC DIAGRAM

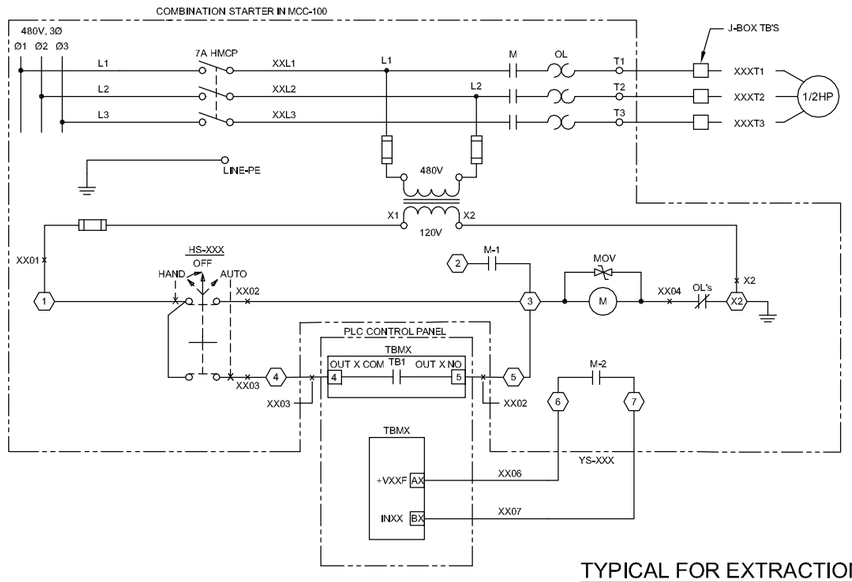

TYPICAL FOR EXTRACTION WELL PUMPS
EW-01,EW-02,EW-03,EW-04,EW-05,EW-06,EW-07,EW-08
EW-09,EW-10,EW-11,EW-12,EW-13,EW-14,EW-15

NOTE: FOR "XX" VALUES SEE REFERENCE DRAWINGS

100% REVIEW DRAWINGS
NOT FOR CONSTRUCTION

REFERENCE DRAWINGS:

EL-13 SHT 10 - PLC CONTROL PANEL DIGITAL INPUT WIRING DIAGRAM
EL-13 SHT 11 - PLC CONTROL PANEL DIGITAL INPUT WIRING DIAGRAM
EL-13 SHT 12 - PLC CONTROL PANEL RELAY OUTPUT WIRING DIAGRAM
EL-13 SHT 13 - PLC CONTROL PANEL RELAY OUTPUT WIRING DIAGRAM

SCALE VERIFICATION: THIS BAR MEASURES 1" ON ORIGINAL. ADJUST SCALE ACCORDINGLY.

No	Revision	Date	Initial
3	FINAL 100% DESIGN	10/12/10	JJ
2	REISSUED 95% SUBMITTAL	02/01/10	JJ
1	95% SUBMITTAL	12/30/09	JJ

RADIO MATERIALS
ATTICA, INDIANA

GROUNDWATER REMEDIATION SYSTEM

TREATMENT BUILDING SCHEMATIC
WIRING DIAGRAM

CONESTOGA-ROVERS & ASSOCIATES

Source Reference:			Date: DECEMBER 2009
Project Manager: S. WARNER	Reviewed By: B. ELKIN	Designed By: P. DIFRANCISCO	Drawn By: P. DIFRANCISCO
Scale: NONE	Project No: 19190-10	Report No: 041	Drawing No: EL-08 SHT 1

19190-10(041)EL-BU008 DEC 30/2009

8 7 6 5 4 3 2 1

D C B A

TREATMENT BUILDING

PLC CONTROL PANEL | MCC-100 | FIELD

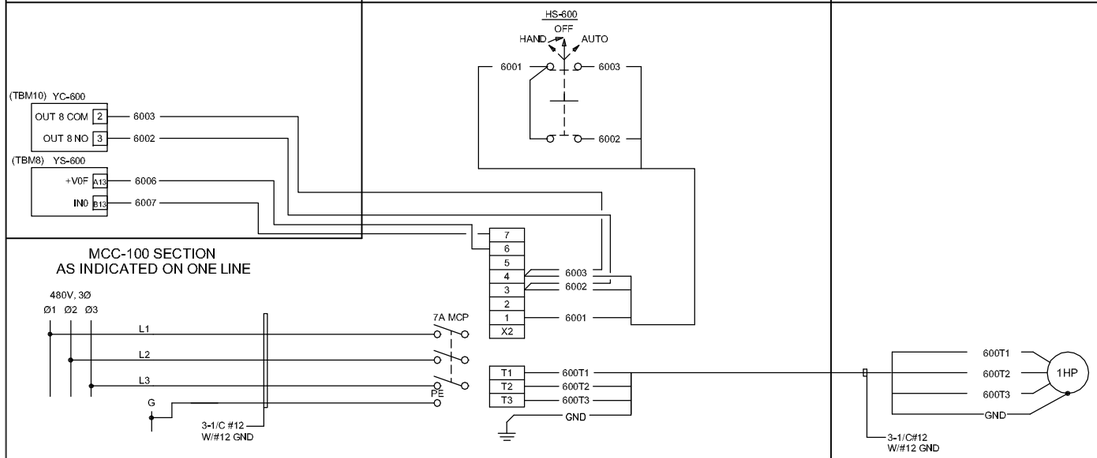

WIRING DIAGRAM

SCHEMATIC DIAGRAM

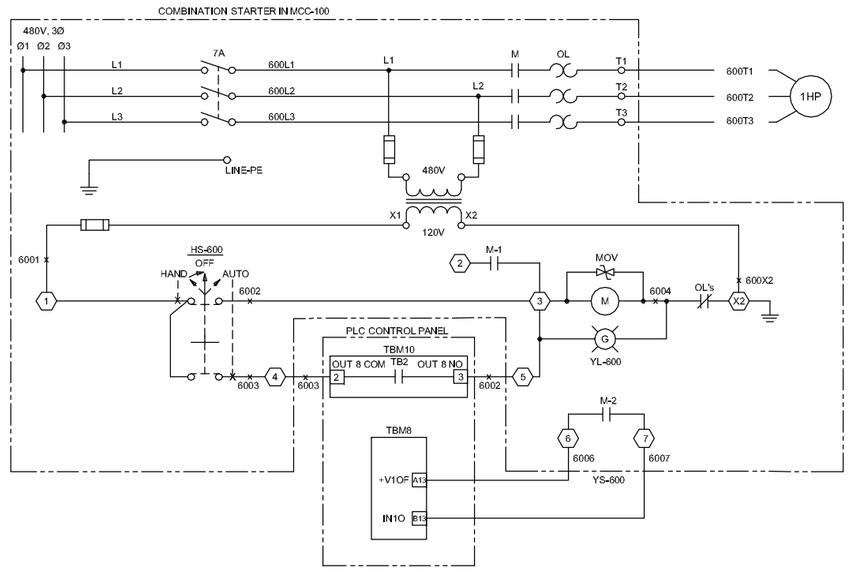

BUILDING SUMP PUMP

TREATMENT BUILDING

PLC CONTROL PANEL | COMBINATION STARTER IN MCC-100 | FIELD

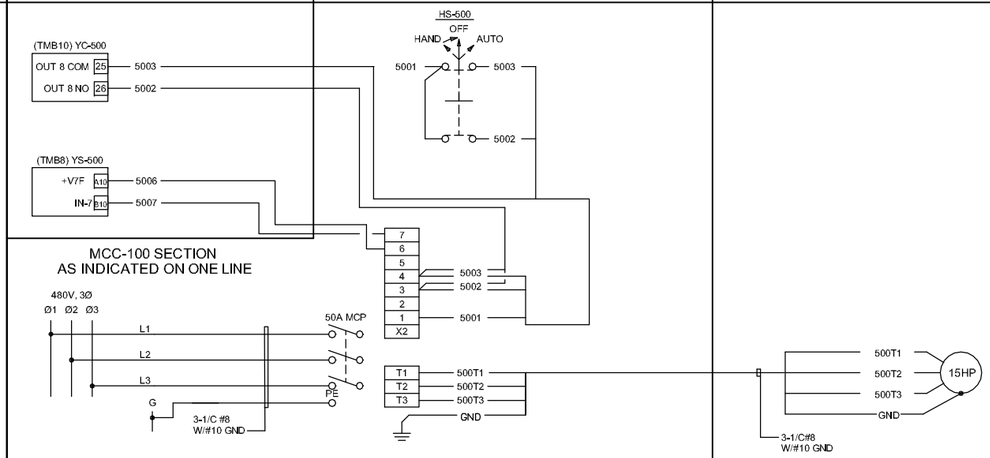

WIRING DIAGRAM

SCHEMATIC DIAGRAM

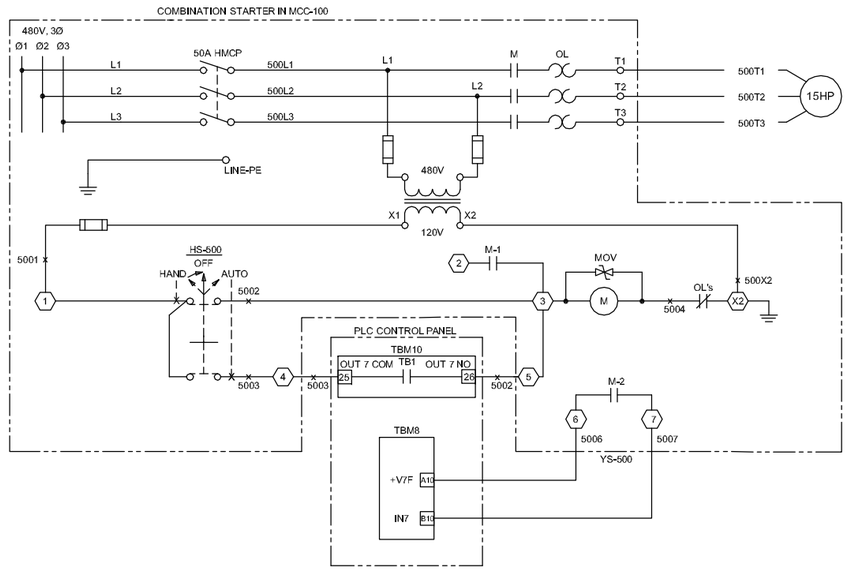

AIR STRIPPER BLOWER

100% REVIEW DRAWINGS
NOT FOR CONSTRUCTION

REFERENCE DRAWINGS:

EL-13 SHT 10 - PLC CONTROL PANEL DIGITAL INPUT WIRING DIAGRAM
EL-13 SHT 11 - PLC CONTROL PANEL DIGITAL INPUT WIRING DIAGRAM
EL-13 SHT 12 - PLC CONTROL PANEL RELAY OUTPUT WIRING DIAGRAM
EL-13 SHT 13 - PLC CONTROL PANEL RELAY OUTPUT WIRING DIAGRAM

SCALE VERIFICATION: THIS BAR MEASURES 1" ON ORIGINAL. ADJUST SCALE ACCORDINGLY.

No	Revision	Date	Initial
3	FINAL 100% DESIGN	10/12/10	JJ
2	REISSUED 95% SUBMITTAL	02/01/10	JJ
1	95% SUBMITTAL	12/30/09	JJ

RADIO MATERIALS
ATTICA, INDIANA

GROUNDWATER REMEDIATION SYSTEM

TREATMENT BUILDING SCHEMATIC
WIRING DIAGRAM

CONESTOGA-ROVERS & ASSOCIATES

Source Reference:			Dates: DECEMBER 2009
Project Manager: S. WARNER	Reviewed By: B. ELKIN	Designed By: P. DIFRANCISCO	Drawn By: P. DIFRANCISCO
Scale: NONE	Project No: 19190-10	Report No: 041	Drawing No: EL-08 SHT 2

19190-10(041)EL-BU010 DEC 30/2009

8 7 6 5 4 3 2 1

TREATMENT BUILDING

VARIABLE SPEED DRIVE IN MCC-100

FIELD

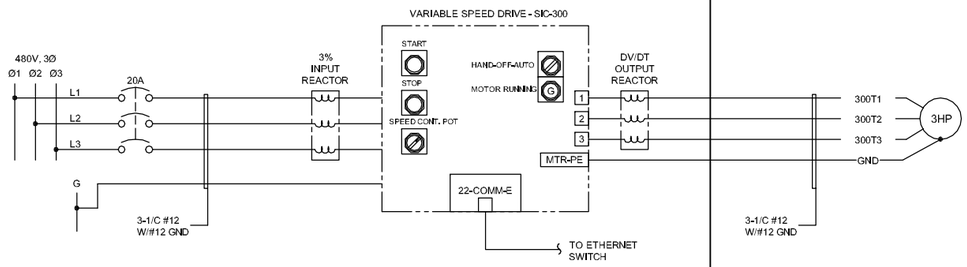

FILTER FEED PUMP

WIRING DIAGRAM

SCHEMATIC DIAGRAM

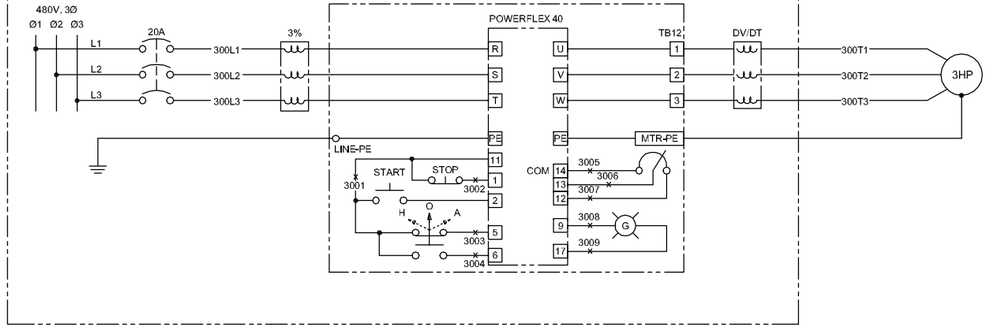

FILTER FEED PUMP

MCC-100

SECTION

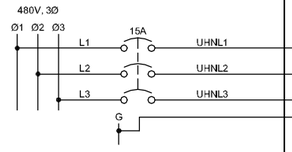

TREATMENT BUILDING

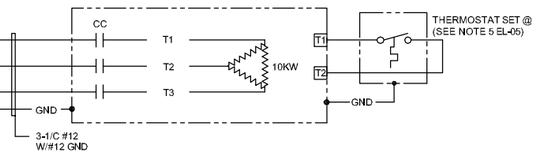

UNIT HEATER NORTH

MCC-100

SECTION

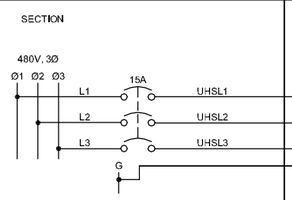

TREATMENT BUILDING

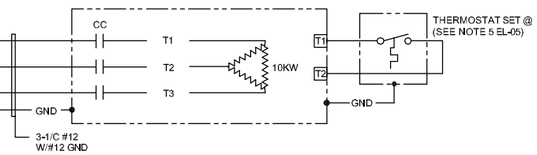

UNIT HEATER SOUTH

MCC-100

SECTION

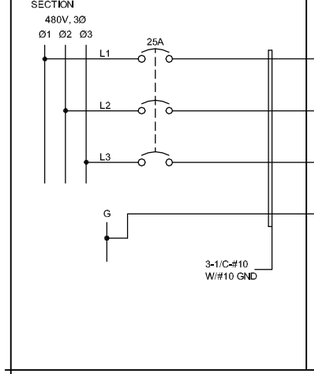

TREATMENT BUILDING

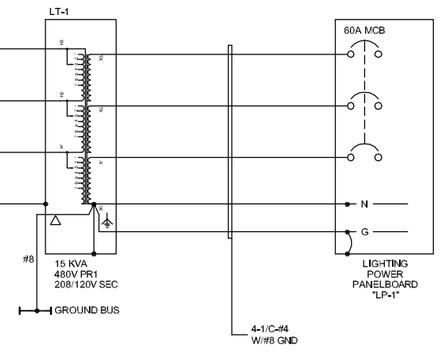

LIGHTING POWER PANELBOARD LP-1

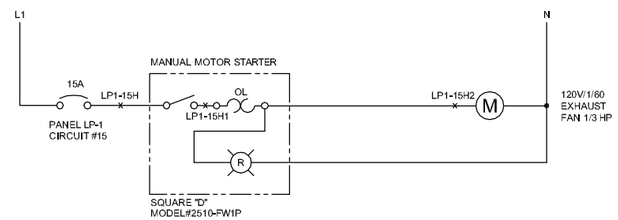

EXHAUST FAN SCHEMATIC DIAGRAM

100% REVIEW DRAWINGS
NOT FOR CONSTRUCTION

REFERENCE DRAWINGS:

EL-13 SHT 10 - PLC CONTROL PANEL DIGITAL INPUT WIRING DIAGRAM
EL-13 SHT 11 - PLC CONTROL PANEL DIGITAL INPUT WIRING DIAGRAM
EL-13 SHT 12 - PLC CONTROL PANEL RELAY OUTPUT WIRING DIAGRAM
EL-13 SHT 13 - PLC CONTROL PANEL RELAY OUTPUT WIRING DIAGRAM

SCALE VERIFICATION: THIS BAR MEASURES 1" ON ORIGINAL. ADJUST SCALE ACCORDINGLY.

No	Revision	Date	Initial
3	FINAL 100% DESIGN	10/12/10	JJ
2	REISSUED 95% SUBMITTAL	02/01/10	JJ
1	95% SUBMITTAL	12/30/09	JJ

RADIO MATERIALS
ATTICA, INDIANA

GROUNDWATER REMEDIATION SYSTEM

TREATMENT BUILDING SCHEMATIC WIRING DIAGRAM

CONESTOGA-ROVERS & ASSOCIATES

Source Reference:			Date: DECEMBER 2009
Project Manager: S. WANNER	Reviewed By: B. ELKIN	Designed By: P. DIFRANCISCO	Drawn By: P. DIFRANCISCO
Scale: NONE	Project No: 19190-10	Report No: 041	Drawing No: EL-09

19190-10(041)EL-BU009 DEC 30/2009

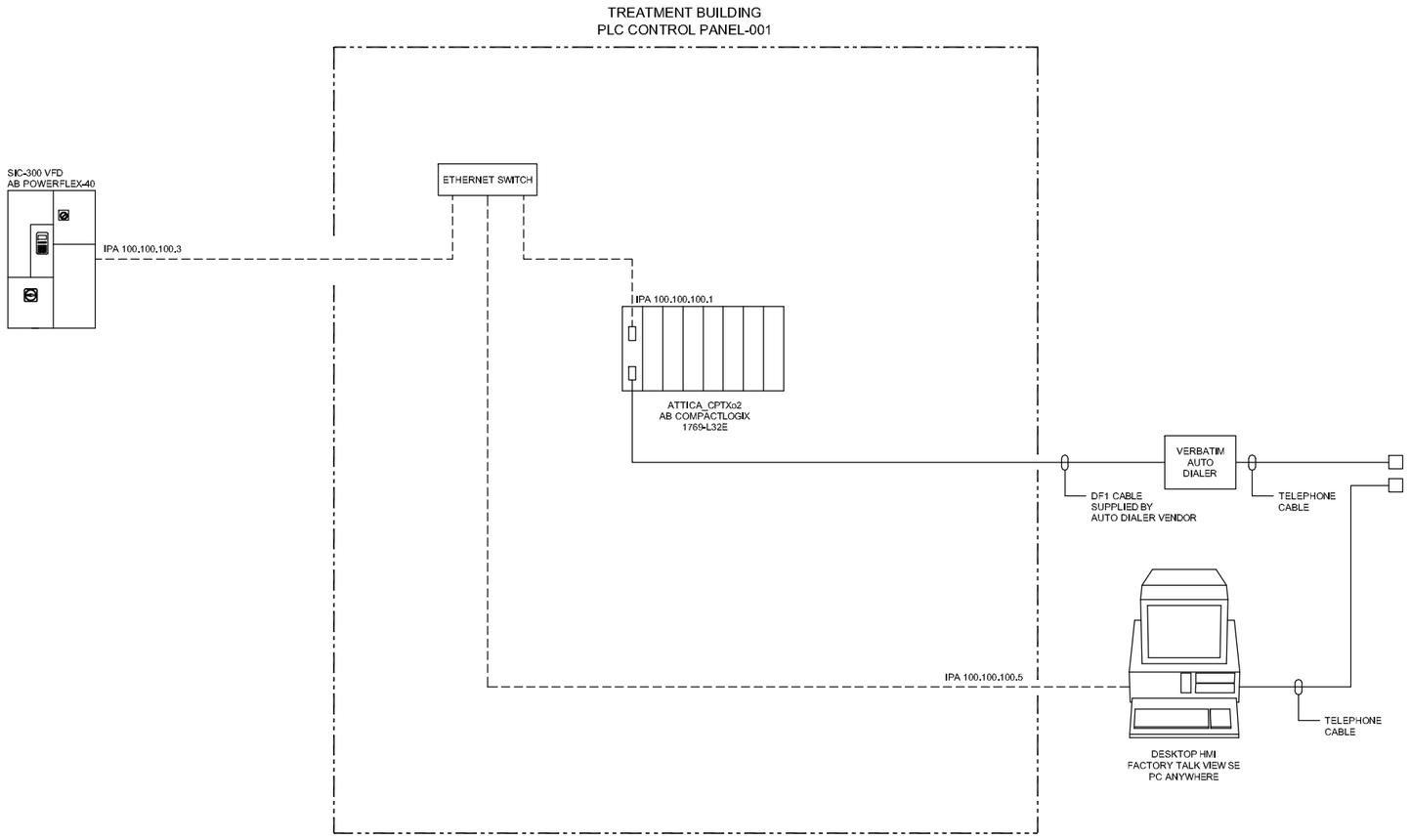

IP ADDRESS	100.100.100.XXX
SUBNET MASK	255.255.255.0
DEFAULT GATEWAY	NA

LEGEND

INDICATES CAT 5e ETHERNET CABLE (UNLESS MARKED OTHERWISE)

INDICATES DF1 COMMUNICATION CABLE (UNLESS MARKED OTHERWISE)

REFERENCE DRAWINGS

100% REVIEW DRAWINGS
NOT FOR CONSTRUCTION

SCALE VERIFICATION: THIS BAR MEASURES 1" ON ORIGINAL. ADJUST SCALE ACCORDINGLY.

No	Revision	Date	Initial
3	FINAL 100% DESIGN	10/12/10	JJ
2	REISSUED 95% SUBMITTAL	02/01/10	JJ
1	95% SUBMITTAL	12/30/09	JJ

RADIO MATERIALS
ATTICA, INDIANA

GROUNDWATER REMEDIATION SYSTEM

TREATMENT BUILDING
NETWORK ARCHITECTURE

CONESTOGA-ROVERS & ASSOCIATES

Source Reference:			Date: DECEMBER 2009
Project Manager: S. WANNER	Reviewed By: J. GEE	Designed By: J. MICHALOWSKI	Drawn By: J. PAUTLER
Scale: NONE	Project No: 19190-10	Report No: 041	Drawing No: EL-10

19190-10(041)EL-B0011 JAN 28/2010

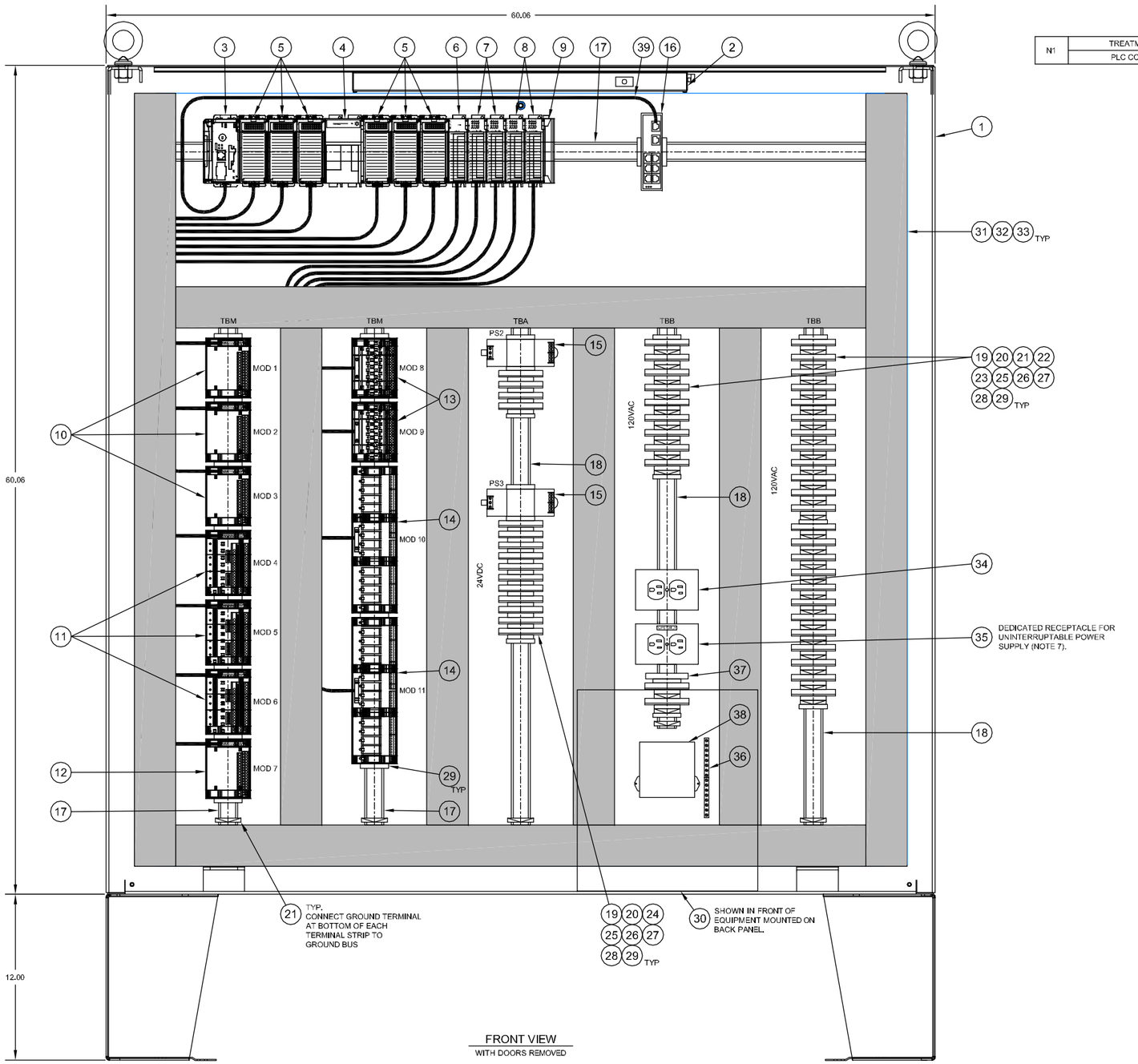

FRONT VIEW
WITH DOORS REMOVED

NAMEPLATE ENGRAVING

N1	TREATMENT BUILDING	4" x 1" WHITE SURFACE
	PLC CONTROL PANEL	3/16" HIGH BLACK LETTERING

GENERAL NOTES

1. ALL WIRING SHALL BE AS DIRECTED ON DWGS, AND AS FOLLOWS:

   MINIMUM WIRE SIZES (SIZE PER SCHEMATIC DIAGRAM)
   PANEL WIRING - TB TO PLC
   120VAC - #14 AWG MTW
   24VDC (POWER) - #18 AWG MTW
   24VDC (ANALOG) - 2/C#18 SHLD
   24VDC (DIGITAL) - 2/C#18 TW

   FIELD WIRING
   120VAC - #14 AWG MTW
   24VDC (POWER) - #16 AWG MTW
   24VDC (ANALOG) - 2/C#16 SHLD
   24VDC (DIGITAL) - 2/C#16 TW

   WIRE COLOR CODES
   120VAC - RED
   120VAC NEUTRAL - WHITE
   480VAC - BLACK
   24VDC (+) - BLUE
   24VDC (-) - LIGHT BLUE
   GROUND - GREEN
   24VDC ANALOG (+) - RED
   24VDC ANALOG (-) - BLACK
   EXTERNALLY POWERED AC CONTROL - YELLOW

2. CONNECTIONS SHALL BE MADE TO DEVICES PER SCHEMATIC WIRING DIAGRAMS

3. ALL PANEL EQUIPMENT SHALL BE INSTALLED SO THAT THERE IS ACCESS TO ALL NECESSARY COMPONENTS AND SO THAT ALL EQUIPMENT DOORS CAN OPEN 90°.

4. 120VAC WIRING AND 24VDC WIRING SHALL BE ROUTED IN SEPARATE WIRING DUCT.

5. PANEL FABRICATOR TO SUPPLY AND INSTALL ALL FUSING FOR IFM MODULES PER WIRING DIAGRAMS PLUS 10% SPARE.

6. THE IFM MODULES SHALL BE LABELLED PER WHICH PLC MODULE THAT THEY ARE CONNECTED TO.

7. THE UNINTERRUPTIBLE POWER SUPPLY SHALL BE FED FROM A DEDICATED 15A-120VAC POWER SOURCE. ALL EQUIPMENT IN THE CONTROL PANEL SHALL BE POWERED FROM THE UPS, WITH THE EXCEPTION OF THE CONTROL PANEL RECEPTACLE.

BILL OF MATERIAL

ITEM	NO.	DESCRIPTION
1	1	HOFFMAN NEMA 12 ENCLOSURE 60"H x 60"W x 10"D CAT. #A6060010LP W/PANEL A60P60
2	1	HOFFMAN FLUORESCENT LIGHT FIXTURE CAT. #ALF16D24R
3	1	ALLEN-BRADLEY COMPACTLOGIX PROCESSOR CAT. #1769-L32E W/ COMPACT FLASH 1784-CF64
4	1	ALLEN-BRADLEY COMPACTLOGIX POWER SUPPLY CAT. #1769-PA4
5	6	ALLEN-BRADLEY COMPACTLOGIX ANALOG INPUT MODULE CAT. #1769-IF8
6	1	ALLEN-BRADLEY COMPACTLOGIX ANALOG OUTPUT MODULE CAT. #1769-OF8C
7	2	ALLEN-BRADLEY COMPACTLOGIX DIGITAL INPUT MODULE CAT. #1769-IQ16
8	2	ALLEN-BRADLEY COMPACTLOGIX 24VDC SOURCING OUTPUT MODULE CAT. #1769-OB16
9	1	ALLEN-BRADLEY COMPACTLOGIX RIGHT END CAP CAT. #1769-ECR
10	3	ALLEN-BRADLEY INTERFACE MODULE CAT. #1492-AIFM8-3 WITH CABLE #1492-ACAB010ED69 (FOR IF8 MODULE)
11	3	ALLEN-BRADLEY INTERFACE MODULE CAT. #1492-AIFM8-F-5 WITH CABLE #1492-ACAB025EB69 (FOR IF8 MODULE)
12	1	ALLEN-BRADLEY INTERFACE MODULE CAT. #1492-AIFM8-3 WITH CABLE #1492-ACAB025D69 (FOR OF8C MODULE)
13	2	ALLEN-BRADLEY INTERFACE MODULE CAT. #1492-IFM20F-F24A-2 WITH CABLE #1492-CAB010B69 (FOR IQ16 MODULE)
14	2	ALLEN-BRADLEY INTERFACE MODULE CAT. #1492-XIM2024-16R WITH CABLE #1492-CAB025E69 (FOR OB16 MODULE)
15	2	SOLA HEV-DUTY 24VDC POWER SUPPLY, 2.5A CAT. #SDN 2.5-24-100P
16	1	BRAD COMMUNICATIONS (WOODHEAD) ETHERNET SWITCH CAT. #DRL-380
17	8'-4"	ALLEN-BRADLEY DIN MOUNTING RAIL CAT. #199-DR1
18	5'-0"	ALLEN-BRADLEY DIN MOUNTING RAIL CAT. #1492-DR6
19	50	ALLEN-BRADLEY IEC FEED-THROUGH TERMINAL BLOCK CAT. #1492-J6
20	2	ALLEN-BRADLEY TERMINAL BLOCK END BARRIER CAT. #1492-EBJ3
21	40	ALLEN-BRADLEY GROUNDING TERMINAL BLOCK CAT. #1492-JG6
22	9	ALLEN-BRADLEY TERMINAL BLOCK END BARRIER CAT. #1492-EB10-Y
23	35	ALLEN-BRADLEY FUSE TERMINAL BLOCK, 120VAC (NEON) CAT. #1492-H4
24	15	ALLEN-BRADLEY FUSE TERMINAL BLOCK, 24VDC (RED LED) CAT. #1492-H5
25	50	ALLEN-BRADLEY FUSE TERMINAL END BARRIER CAT. #1492-N37
26	50	FUSE ELEMENTS - LITTLEFUSE OR EQUAL SEE SCHEMATIC DIAGRAMS FOR FUSE SIZE
27	2	ALLEN-BRADLEY TERMINAL GROUP MARKER CAT. #1492-GM35
28	2	ALLEN-BRADLEY TERMINAL MARKER (1-100) CAT. #1492-SM8X12H1-100
29	28	ALLEN-BRADLEY END ANCHOR CAT. #1492-EA35
30	1	APC UNTERRUPTIBLE POWER SUPPLY 1500VA 120VAC CAT. #BR1500
31	30'-0"	WIREWAY MODULAR WIRING DUCT COVER 3" CAT. #C37
32	30'-0"	WIREWAY MODULAR WIRING DUCT 3" BASE CAT. #B37
33	30'-0"	WIREWAY MODULAR WIRING DUCT SIDE 4" BASE CAT. #S47AB
34	1	HUBBELL DIN RAIL BOX W/GFR5252GYA GROUND FAULT RECEPTACLE CAT. #DRUBGFI15
35	1	HUBBELL DIN RAIL BOX W/CR5252GY RECEPTACLE CAT. #DRU315
36	2	SQUARE-D GROUND BAR KIT CAT. #PK0GTA6
37	1	ALLEN-BRADLEY RELAY W/ SOCKET, 120VAC COIL CAT. #700-HP32A1 W/ SOCKET #700-HN123
38	1	NORTHERN TECHNOLOGIES SURGE ARRESTER CAT. #TCS-HWR
39	AS REQ'D	ETHERNET CABLE -

100% REVIEW DRAWINGS
NOT FOR CONSTRUCTION

SCALE VERIFICATION: THIS BAR MEASURES 1" ON ORIGINAL. ADJUST SCALE ACCORDINGLY.

No	Revision	Date	Initial
3	FINAL 100% DESIGN	10/12/10	JJ
2	REISSUED 95% SUBMITTAL	02/01/10	JJ
1	95% SUBMITTAL	12/30/09	JJ

RADIO MATERIALS
ATTICA, INDIANA

GROUNDWATER REMEDIATION SYSTEM

PLC CONTROL PANEL
ARRANGEMENT AND BILL OF MATERIALS

CONESTOGA-ROVERS & ASSOCIATES

Source Reference			Date: DECEMBER 2009
Project Manager: S. WANNER	Reviewed By: J. GEE	Designed By: J. MICHALOWSKI	Drawn By: J. FAUTLER
Scale: 3" = 1'-0"	Project No: 19190-10	Report No: 041	Drawing No: EL-11

19190-10(041)EL-BU025 JAN 28/2010

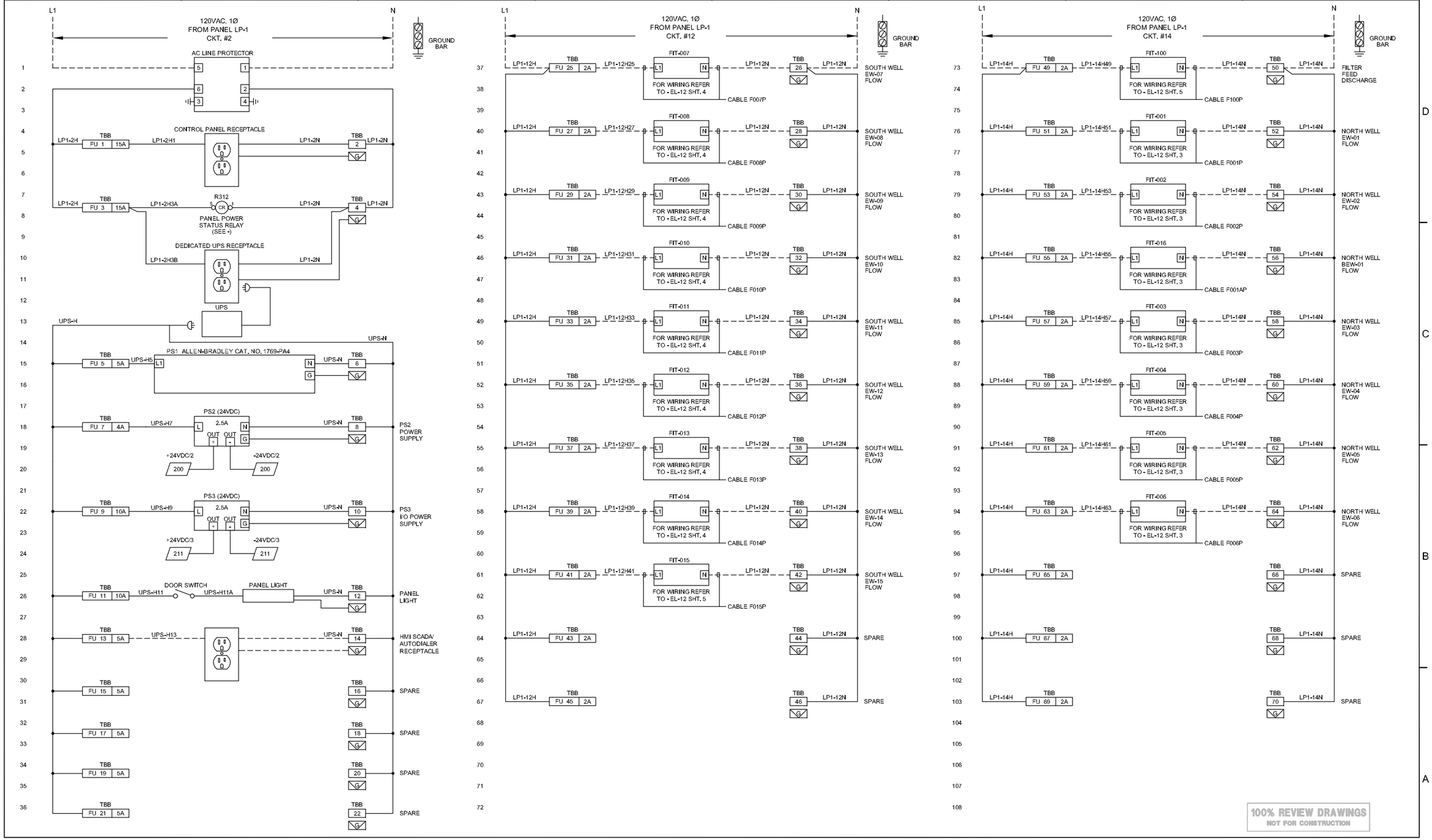

REFERENCE DRAWINGS

EL-12 SHT. 2 PLC CONTROL PANEL POWER DISTRIBUTION DIAGRAM
EL-12 SHT. 3 PLC CONTROL PANEL ANALOG INPUT WIRING DIAGRAM
EL-12 SHT. 4 PLC CONTROL PANEL ANALOG INPUT WIRING DIAGRAM
EL-12 SHT. 5 PLC CONTROL PANEL ANALOG INPUT WIRING DIAGRAM

LEGEND

- - - - - - INDICATES EXTERNAL TO CONTROL PANEL WIRING
——— INDICATES PLC WIRING

NOTES

1. REFER TO DRAWING EL-11 FOR WIRE SIZE AND COLOR CODE.

SCALE VERIFICATION: THIS BAR MEASURES 1" ON ORIGINAL. ADJUST SCALE ACCORDINGLY.

No	Revision	Date	Initial
3	FINAL 100% DESIGN	10/12/10	JJ
2	REISSUED 95% SUBMITTAL	02/01/10	JJ
1	95% SUBMITTAL	12/30/09	JJ

RADIO MATERIALS
ATTICA, INDIANA

GROUNDWATER REMEDIATION SYSTEM

PLC CONTROL PANEL
POWER DISTRIBUTION DIAGRAM

CONESTOGA-ROVERS & ASSOCIATES

Source Reference:			Dates: DECEMBER 2009
Project Manager: S. WANNER	Reviewed By: J. GEE	Designed By: J. MICHALOWSKI	Drawn By: J. FAUTLER
Scale: NONE	Project No: 19190-10	Report No: 041	Drawing No: EL-12 SHT. 1

19190-10(041)EL-BU012 JAN 28/2010

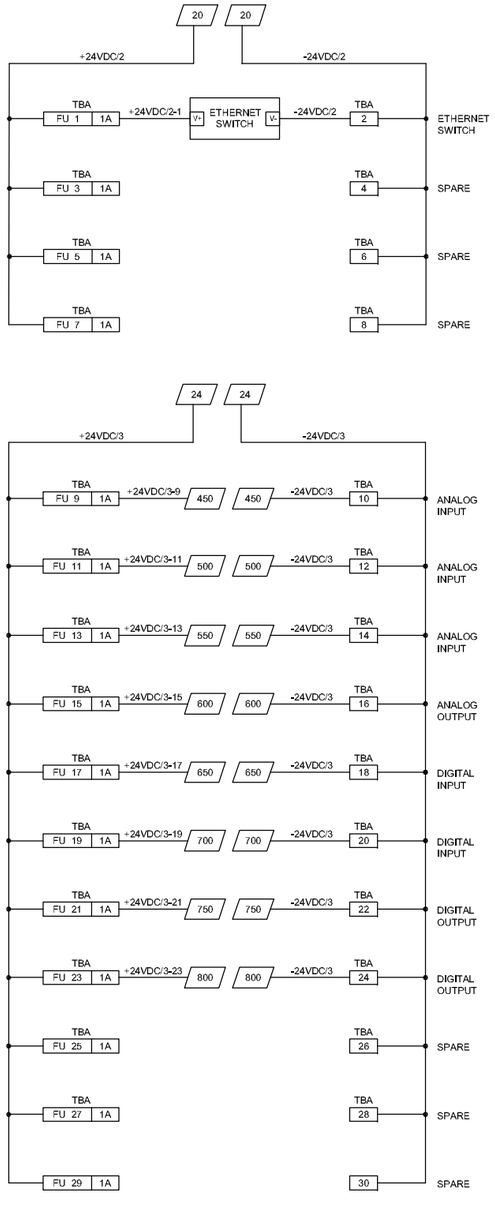

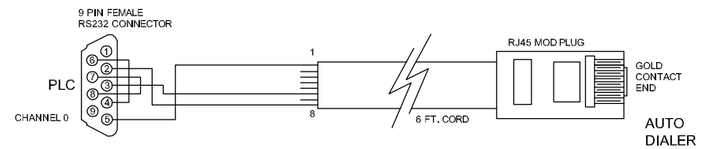

PLC TO AUTO DIALER WIRING
(PURCHASED FROM AUTODIALER VENDOR)

100% REVIEW DRAWINGS
NOT FOR CONSTRUCTION

REFERENCE DRAWINGS

EL-12 SHT. 1 PLC CONTROL PANEL POWER DISTRIBUTION DIAGRAM
EL-12 SHT. 6 PLC CONTROL PANEL ANALOG INPUT WIRING DIAGRAM
EL-12 SHT. 7 PLC CONTROL PANEL ANALOG INPUT WIRING DIAGRAM
EL-12 SHT. 8 PLC CONTROL PANEL ANALOG INPUT WIRING DIAGRAM
EL-12 SHT. 9 PLC CONTROL PANEL ANALOG OUTPUT WIRING DIAGRAM
EL-12 SHT. 10 PLC CONTROL PANEL DIGITAL INPUT WIRING DIAGRAM
EL-12 SHT. 11 PLC CONTROL PANEL DIGITAL INPUT WIRING DIAGRAM
EL-12 SHT. 12 PLC CONTROL PANEL RELAY OUTPUT WIRING DIAGRAM
EL-12 SHT. 13 PLC CONTROL PANEL RELAY OUTPUT WIRING DIAGRAM

LEGEND

- - - - - INDICATES EXTERNAL TO CONTROL PANEL WIRING
——— INDICATES PLC WIRING

NOTES

1. REFER TO DRAWING EL-11 FOR WIRE SIZE AND COLOR CODE.

SCALE VERIFICATION: THIS BAR MEASURES 1" ON ORIGINAL. ADJUST SCALE ACCORDINGLY.

No	Revision	Date	Initial
3	FINAL 100% DESIGN	10/12/10	JJ
2	REISSUED 95% SUBMITTAL	02/01/10	JJ
1	95% SUBMITTAL	12/30/09	JJ

RADIO MATERIALS
ATTICA, INDIANA

GROUNDWATER REMEDIATION SYSTEM

PLC CONTROL PANEL
POWER DISTRIBUTION DIAGRAM

CONESTOGA-ROVERS & ASSOCIATES

Source Reference:			Date: DECEMBER 2009
Project Manager: S. WANNER	Reviewed By: J. GEE	Designed By: J. MICHALOWSKI	Drawn By: J. FAUTLER
Scale: NONE	Project No: 19190-10	Report No: 041	Drawing No: EL-12 SHT. 2

19190-10(041)EL-BU013 DEC 30/2009

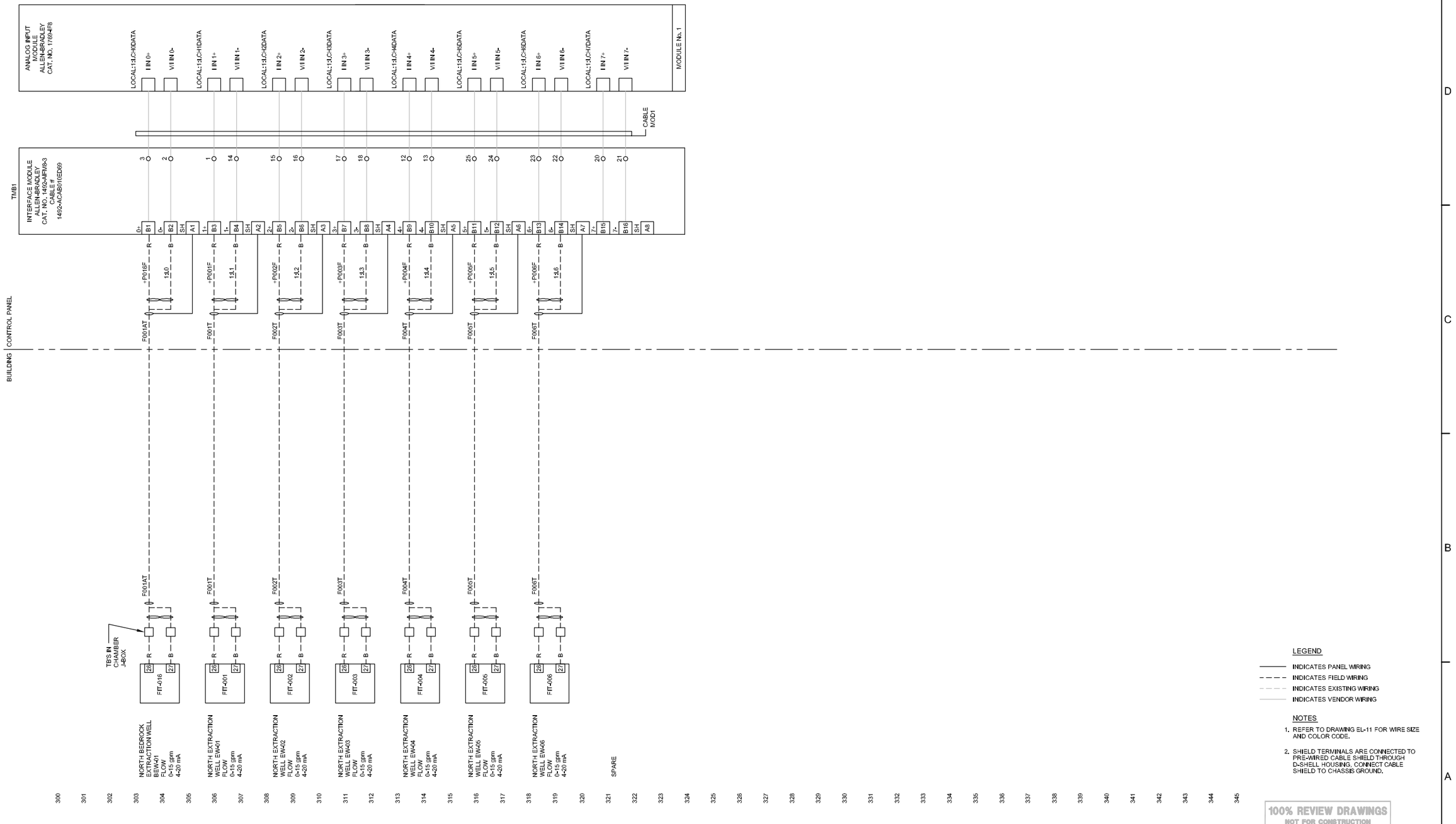

REFERENCE DRAWINGS

EL-11 PLC CONTROL PANEL ARRANGEMENT AND BILL OF MATERIALS
EL-12 SHT. 1 PLC CONTROL PANEL POWER DISTRIBUTION DIAGRAM

SCALE VERIFICATION: THIS BAR MEASURES 1" ON ORIGINAL. ADJUST SCALE ACCORDINGLY.

No	Revision	Date	Initial
3	FINAL 100% DESIGN	10/12/10	JJ
2	REISSUED 95% SUBMITTAL	02/01/10	JJ
1	95% SUBMITTAL	12/30/09	JJ

RADIO MATERIALS
ATTICA, INDIANA

GROUNDWATER REMEDIATION SYSTEM

PLC CONTROL PANEL
ANALOG INPUT WIRING DIAGRAM

CONESTOGA-ROVERS & ASSOCIATES

Source Reference:			Date: DECEMBER 2009
Project Manager: S. WANNER	Reviewed By: J. GEE	Designed By: J. MICHALOWSKI	Drawn By: J. FAUTLER
Scale: NONE	Project No: 19190-10	Report No: 041	Drawing No: EL-12 SHT. 3

19190-10(041)EL-BU014 JAN 28/2010

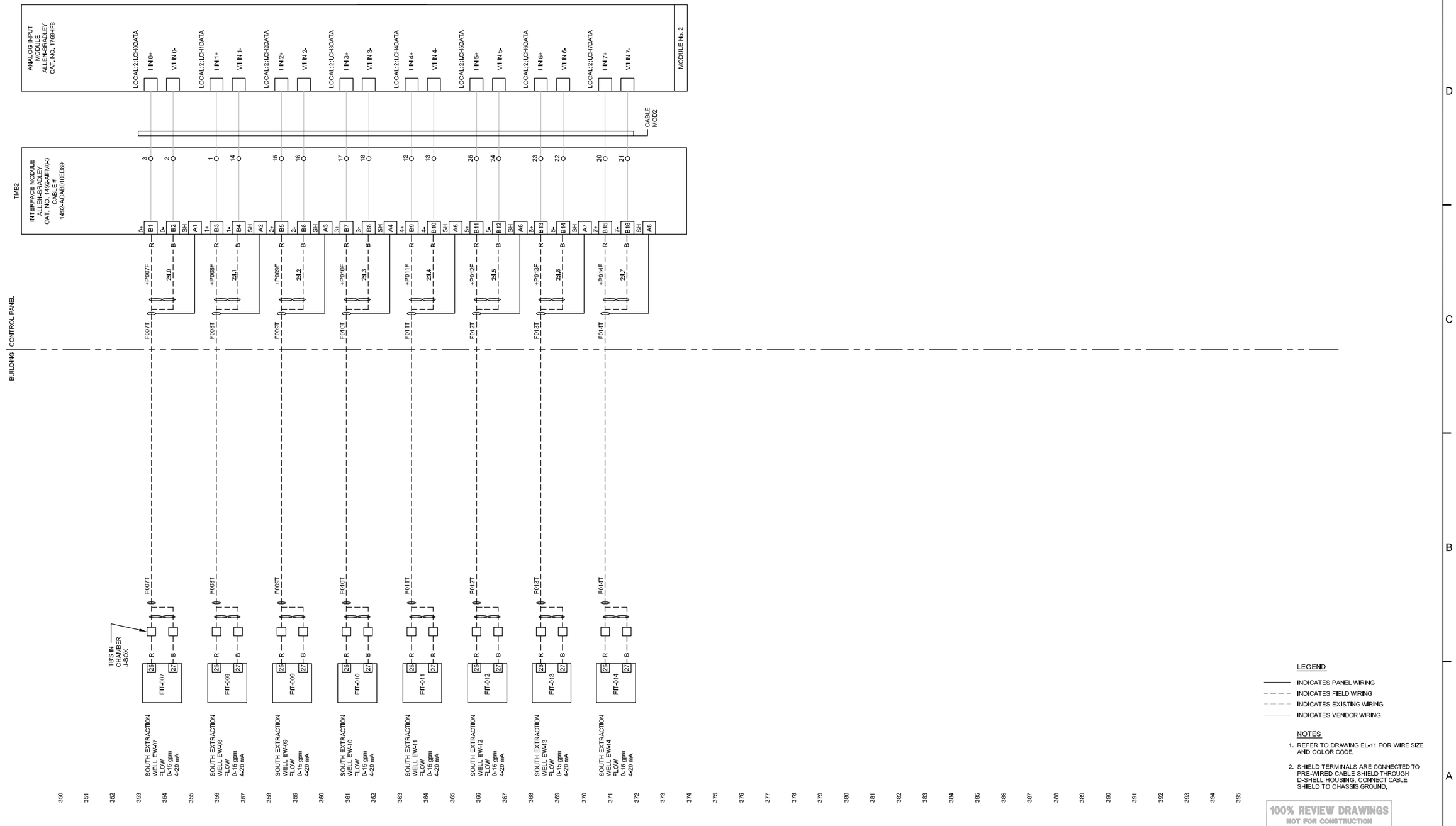

REFERENCE DRAWINGS

EL-11 PLC CONTROL PANEL ARRANGEMENT AND BILL OF MATERIALS
EL-12 SHT. 1 PLC CONTROL PANEL POWER DISTRIBUTION DIAGRAM

SCALE VERIFICATION: THIS BAR MEASURES 1" ON ORIGINAL. ADJUST SCALE ACCORDINGLY.

No	Revision	Date	Initial
3	FINAL 100% DESIGN	10/12/10	JJ
2	REISSUED 95% SUBMITTAL	02/01/10	JJ
1	95% SUBMITTAL	12/30/09	JJ

RADIO MATERIALS
ATTICA, INDIANA

GROUNDWATER REMEDIATION SYSTEM

PLC CONTROL PANEL
ANALOG INPUT WIRING DIAGRAM

CONESTOGA-ROVERS & ASSOCIATES

Source Reference:			Date: DECEMBER 2009
Project Manager: S. WANNER	Reviewed By: J. GEE	Designed By: J. MICHALOWSKI	Drawn By: J. FAUTLER
Scale: NONE	Project No: 19190-10	Report No: 041	Drawing No: EL-12 SHT. 4

19190-10(041)EL-BU015 JAN 28/2010

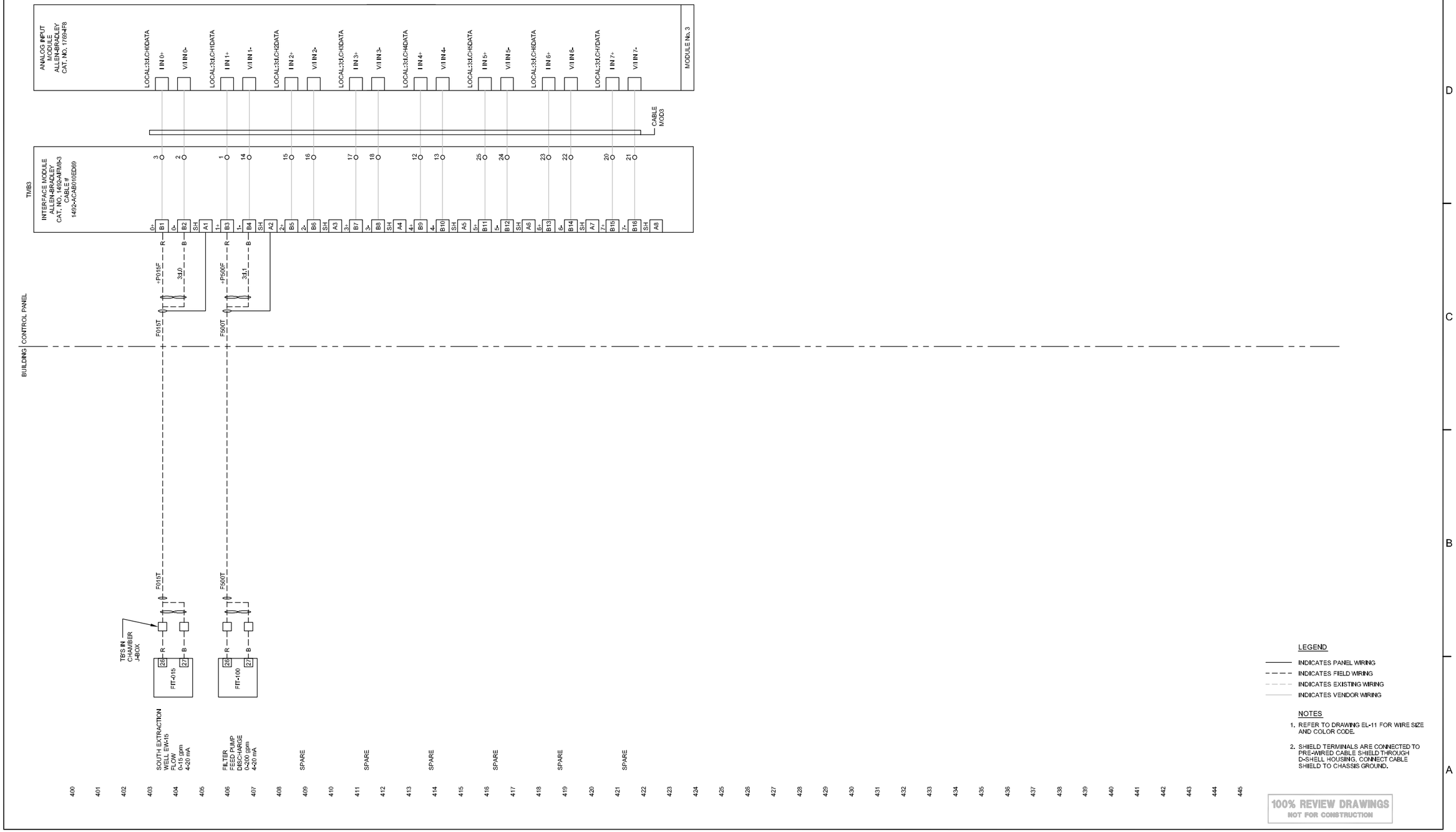

REFERENCE DRAWINGS

EL-11 PLC CONTROL PANEL ARRANGEMENT AND BILL OF MATERIALS
EL-12 SHT. 1 PLC CONTROL PANEL POWER DISTRIBUTION DIAGRAM

SCALE VERIFICATION: THIS BAR MEASURES 1" ON ORIGINAL. ADJUST SCALE ACCORDINGLY.

No	Revision	Date	Initial
3	FINAL 100% DESIGN	10/12/10	JJ
2	REISSUED 95% SUBMITTAL	02/01/10	JJ
1	95% SUBMITTAL	12/30/09	JJ

RADIO MATERIALS
ATTICA, INDIANA

GROUNDWATER REMEDIATION SYSTEM

PLC CONTROL PANEL
ANALOG INPUT WIRING DIAGRAM

CONESTOGA-ROVERS & ASSOCIATES

Source Reference:			Date: DECEMBER 2009
Project Manager: S. WANNER	Reviewed By: J. GEE	Designed By: J. MICHALOWSKI	Drawn By: J. FAUTLER
Scale: NONE	Project No: 19190-10	Report No: 041	Drawing No: EL-12 SHT. 5

19190-10(041)EL-BU016 JAN 28/2010

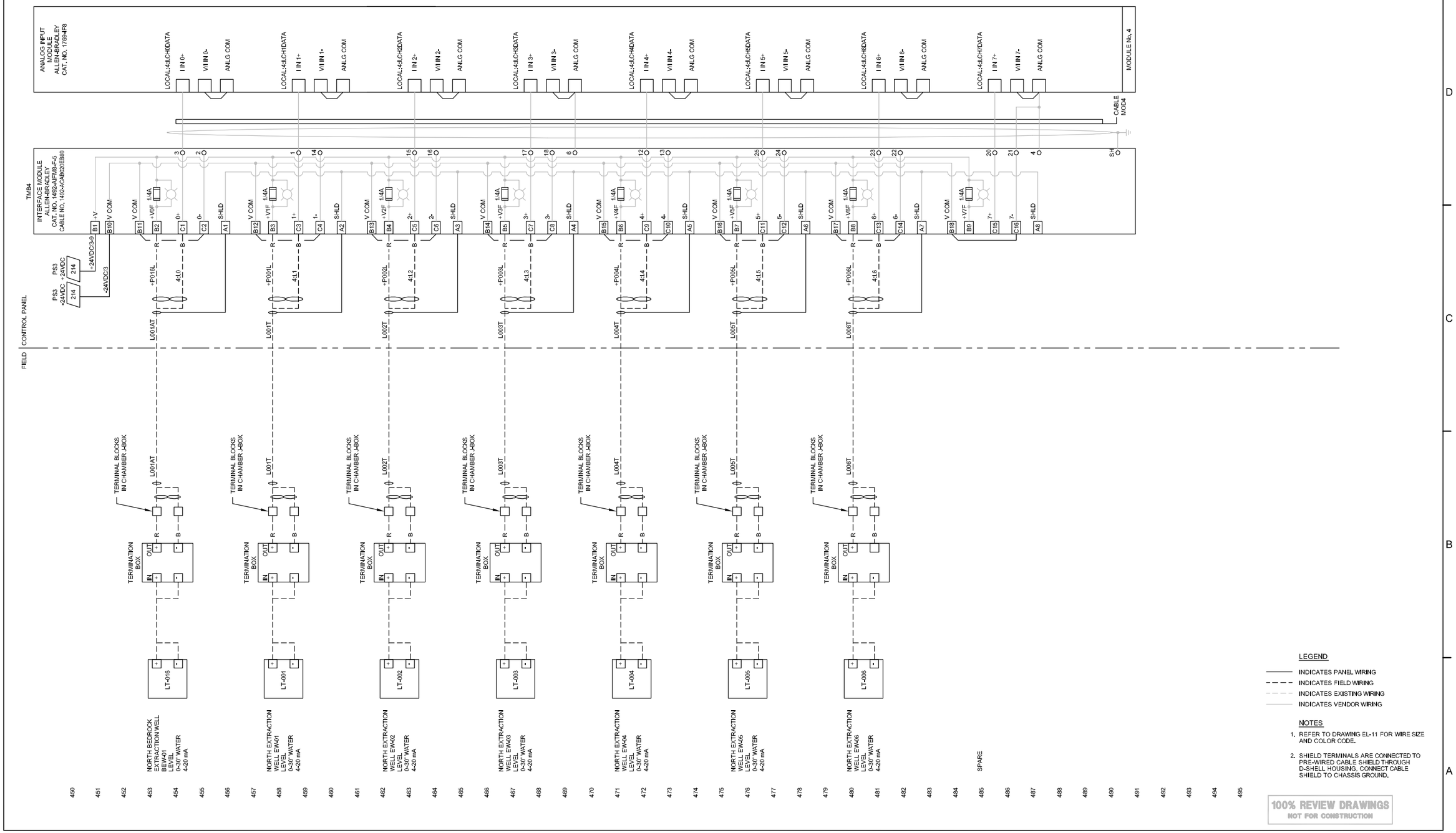

REFERENCE DRAWINGS

EL-11 PLC CONTROL PANEL ARRANGEMENT AND BILL OF MATERIALS
EL-12 SHT. 2 PLC CONTROL PANEL POWER DISTRIBUTION DIAGRAM

SCALE VERIFICATION: THIS BAR MEASURES 1" ON ORIGINAL. ADJUST SCALE ACCORDINGLY.

No	Revision	Date	Initial
3	FINAL 100% DESIGN	10/12/10	JJ
2	REISSUED 95% SUBMITTAL	02/01/10	JJ
1	95% SUBMITTAL	12/30/09	JJ

RADIO MATERIALS
ATTICA, INDIANA

GROUNDWATER REMEDIATION SYSTEM

PLC CONTROL PANEL
ANALOG INPUT WIRING DIAGRAM

CONESTOGA-ROVERS & ASSOCIATES

Source Reference:			Date: DECEMBER 2009
Project Manager: S. WANNER	Reviewed By: J. GEE	Designed By: J. MICHALOWSKI	Drawn By: J. FAUTLER
Scale: NONE	Project No: 19190-10	Report No: 041	Drawing No: EL-12 SHT. 6

19190-10(041)EL-B0017 JAN 28/2010

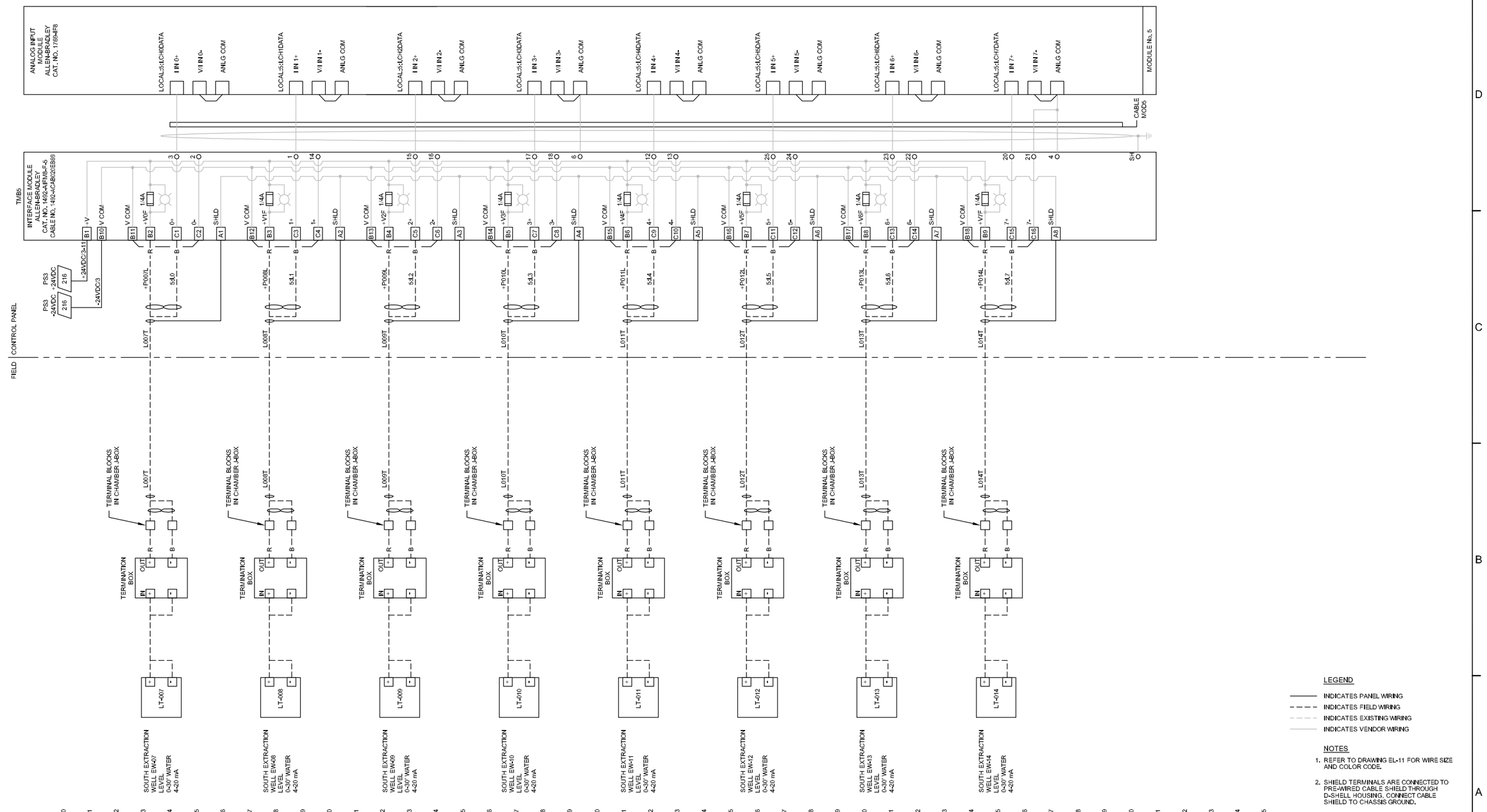

REFERENCE DRAWINGS

EL-11 PLC CONTROL PANEL ARRANGEMENT AND BILL OF MATERIALS
EL-12 SHT. 2 PLC CONTROL PANEL POWER DISTRIBUTION DIAGRAM

SCALE VERIFICATION: THIS BAR MEASURES 1" ON ORIGINAL. ADJUST SCALE ACCORDINGLY.

No	Revision	Date	Initial
3	FINAL 100% DESIGN	10/12/10	JJ
2	REISSUED 95% SUBMITTAL	02/01/10	JJ
1	95% SUBMITTAL	12/30/09	JJ

RADIO MATERIALS
ATTICA, INDIANA

GROUNDWATER REMEDIATION SYSTEM

PLC CONTROL PANEL
ANALOG INPUT WIRING DIAGRAM

CONESTOGA-ROVERS & ASSOCIATES

Source Reference:			Date: DECEMBER 2009
Project Manager: S. WANNER	Reviewed By: J. GEE	Designed By: J. MICHALOWSKI	Drawn By: J. FAUTLER
Scale: NONE	Project No: 19190-10	Report No: 041	Drawing No: EL-12 SHT. 7

19190-10(041)EL-B0018 JAN 28/2010

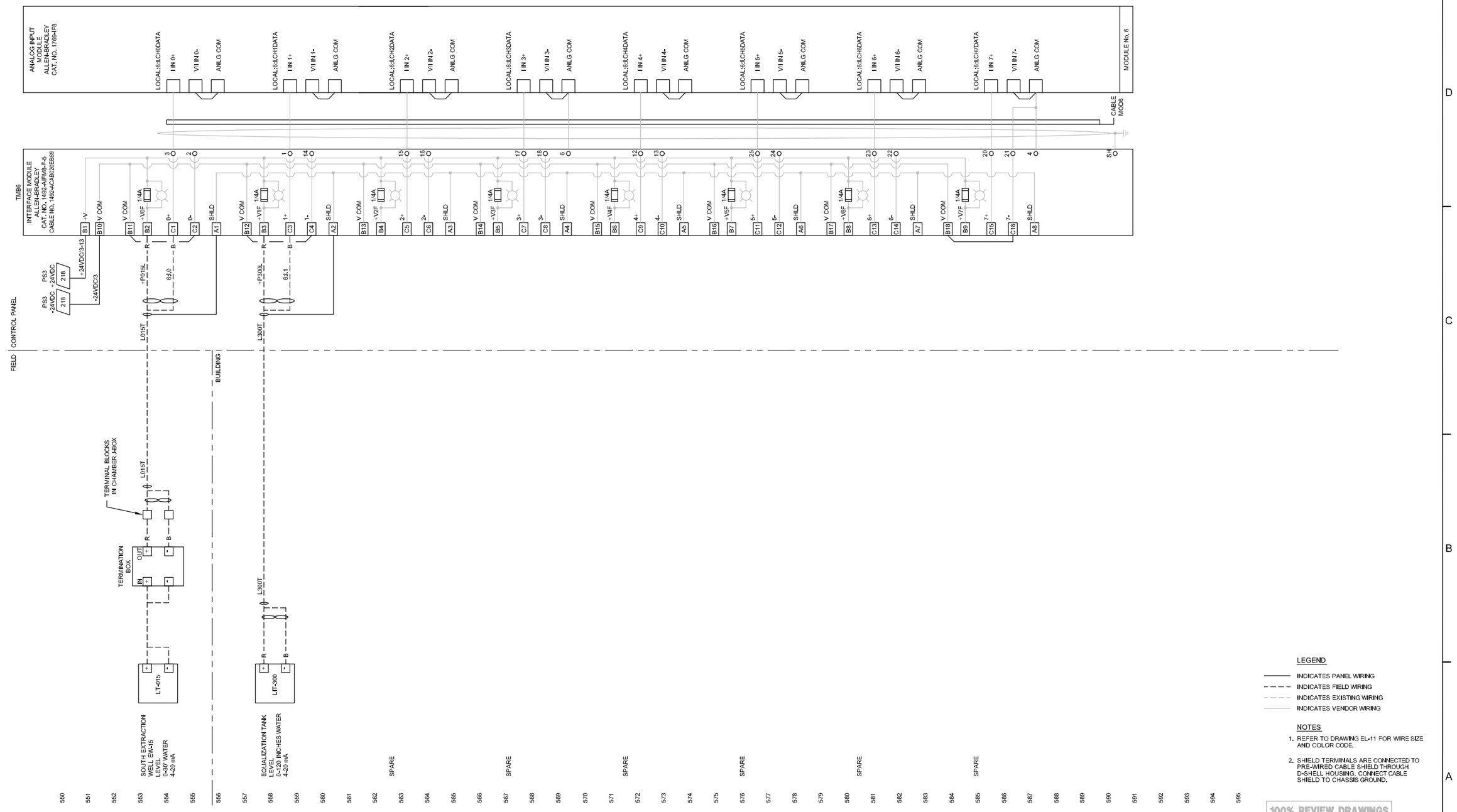

REFERENCE DRAWINGS

EL-11 PLC CONTROL PANEL ARRANGEMENT AND BILL OF MATERIALS
EL-12 SHT. 2 PLC CONTROL PANEL POWER DISTRIBUTION DIAGRAM

SCALE VERIFICATION: THIS BAR MEASURES 1" ON ORIGINAL. ADJUST SCALE ACCORDINGLY.

No	Revision	Date	Initial
3	FINAL 100% DESIGN	10/12/10	JJ
2	REISSUED 95% SUBMITTAL	02/01/10	JJ
1	95% SUBMITTAL	12/30/09	JJ

RADIO MATERIALS
ATTICA, INDIANA

GROUNDWATER REMEDIATION SYSTEM

PLC CONTROL PANEL
ANALOG INPUT WIRING DIAGRAM

CONESTOGA-ROVERS & ASSOCIATES

Source Reference:			Date: DECEMBER 2009
Project Manager: S. WANNER	Reviewed By: J. GEE	Designed By: J. MICHALOWSKI	Drawn By: J. FAUTLER
Scale: NONE	Project No: 19190-10	Report No: 041	Drawing No: EL-12 SHT. 8

19190-10(041)EL-B0019 JAN 26/2010

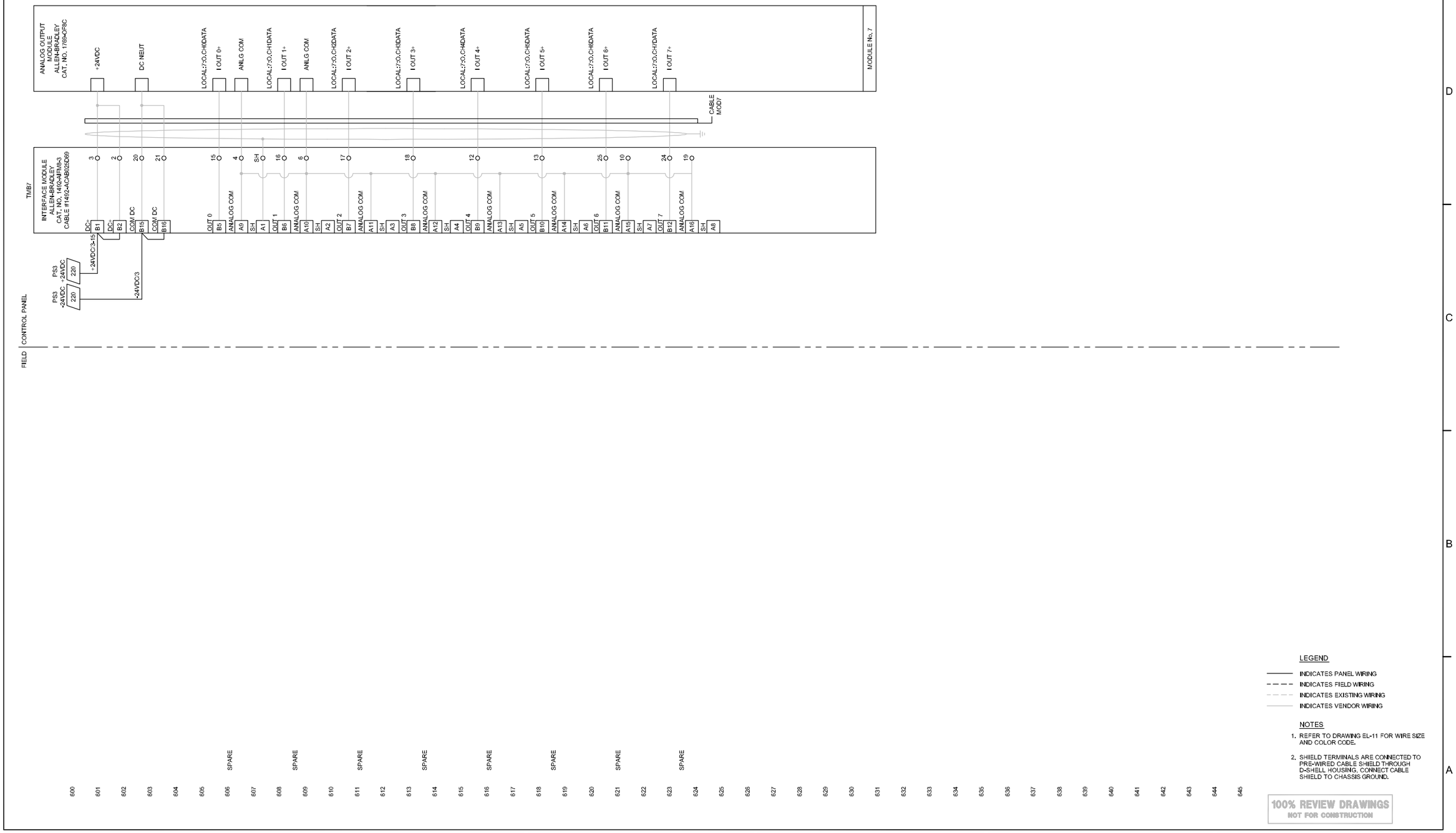

REFERENCE DRAWINGS

EL-11 PLC CONTROL PANEL ARRANGEMENT AND BILL OF MATERIALS
EL-12 SHT. 2 PLC CONTROL PANEL POWER DISTRIBUTION DIAGRAM

SCALE VERIFICATION: THIS BAR MEASURES 1" ON ORIGINAL. ADJUST SCALE ACCORDINGLY.

No	Revision	Date	Initial
3	FINAL 100% DESIGN	10/12/10	JJ
2	REISSUED 95% SUBMITTAL	02/01/10	JJ
1	95% SUBMITTAL	12/30/09	JJ

RADIO MATERIALS
ATTICA, INDIANA

GROUNDWATER REMEDIATION SYSTEM

PLC CONTROL PANEL
ANALOG OUTPUT WIRING DIAGRAM

CONESTOGA-ROVERS & ASSOCIATES

Source Reference:			Date: DECEMBER 2009
Project Manager: S. WARNER	Reviewed By: J. GEE	Designed By: J. MICHALOWSKI	Drawn By: J. PAUTLER
Scale: NONE	Project No: 19190-10	Report No: 041	Drawing No: EL-12 SHT. 9

19190-10(041)EL-BU020 JAN 28/2010

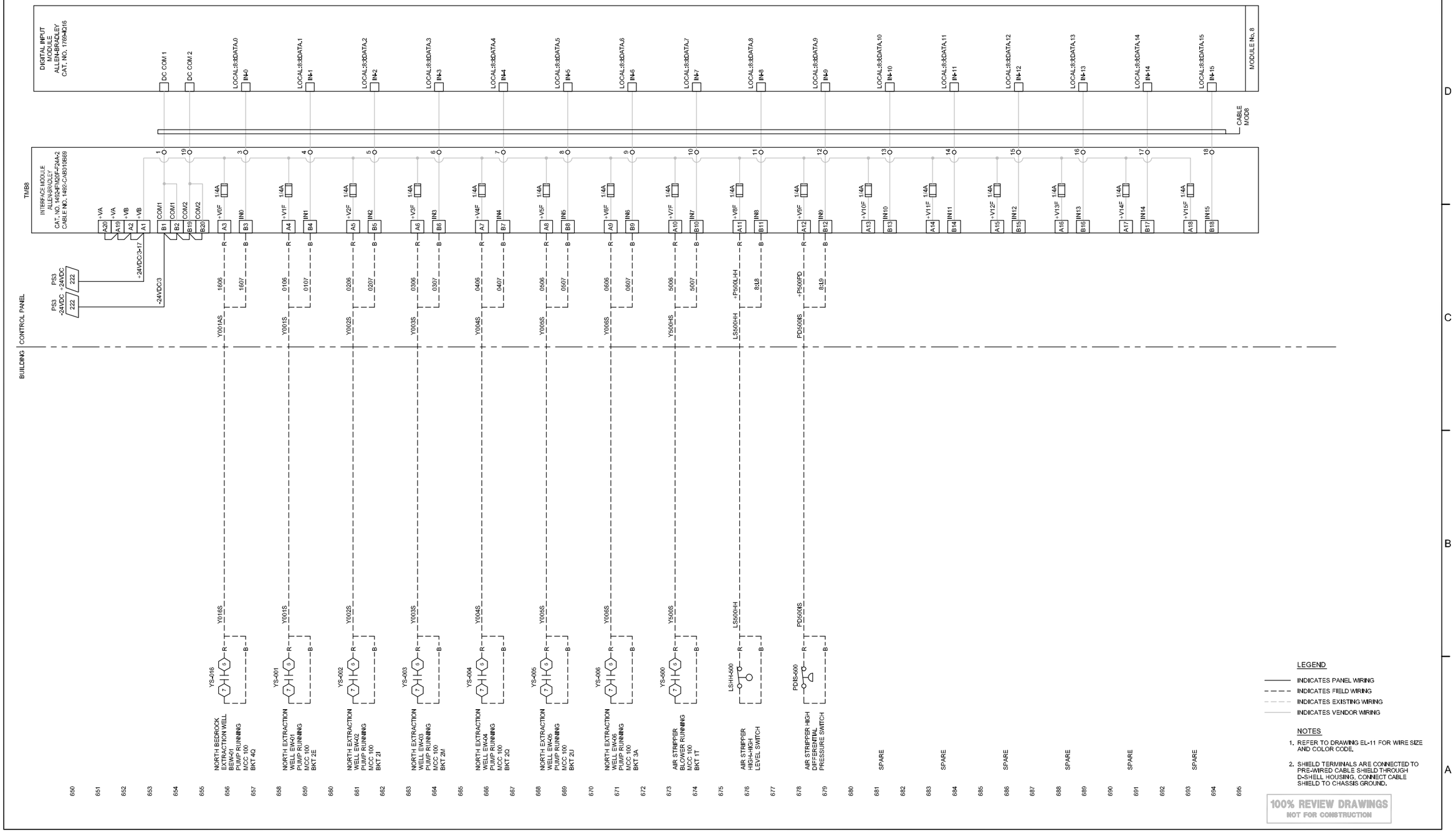

REFERENCE DRAWINGS

EL-01 ONE LINE DIAGRAM
EL-08 SHT 1 TREATMENT BUILDING SCHEMATIC WIRING DIAGRAM
EL-09 TREATMENT BUILDING SCHEMATIC WIRING DIAGRAM
EL-11 PLC CONTROL PANEL ARRANGEMENT AND BILL OF MATERIALS
EL-12 SHT. 2 PLC CONTROL PANEL POWER DISTRIBUTION DIAGRAM

SCALE VERIFICATION: THIS BAR MEASURES 1" ON ORIGINAL. ADJUST SCALE ACCORDINGLY.

No	Revision	Date	Initial
3	FINAL 100% DESIGN	10/12/10	JJ
2	REISSUED 95% SUBMITTAL	02/01/10	JJ
1	95% SUBMITTAL	12/30/09	JJ

RADIO MATERIALS
ATTICA, INDIANA

GROUNDWATER REMEDIATION SYSTEM

PLC CONTROL PANEL
DIGITAL INPUT WIRING DIAGRAM

CONESTOGA-ROVERS & ASSOCIATES

Source Reference:			Date: DECEMBER 2009
Project Manager: S. WANNER	Reviewed By: J. GEE	Designed By: J. MICHALOWSKI	Drawn By: J. PAUTLER
Scale: NONE	Project No: 19190-10	Report No: 041	Drawing No: EL-12 SHT. 10

19190-10(041)EL-BU021 JAN 28/2010

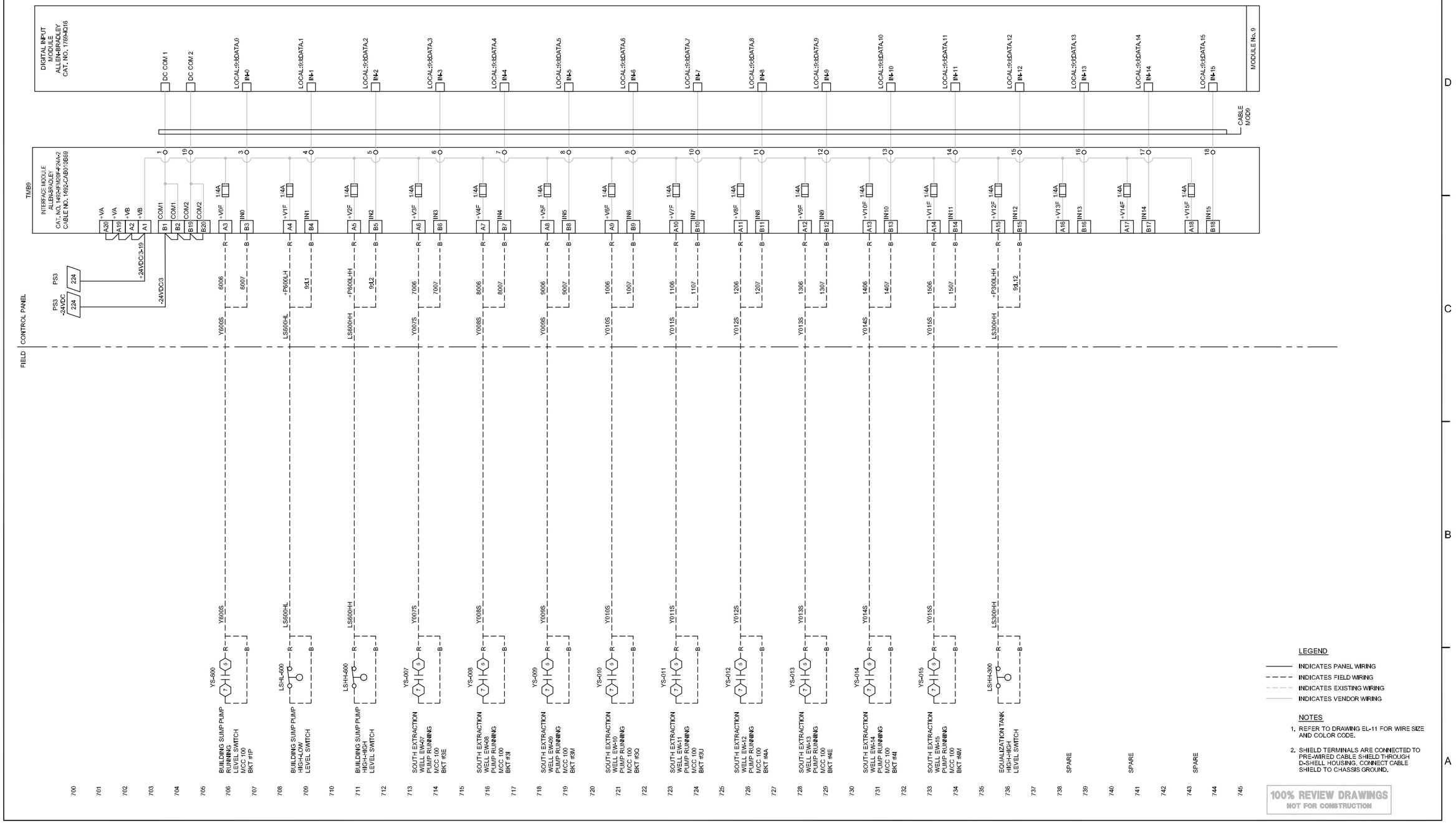

REFERENCE DRAWINGS

ONE LINE DIAGRAM
EL-08 SHT 1 TREATMENT BUILDING SCHEMATIC WIRING DIAGRAM
EL-08 SHT 2 TREATMENT BUILDING SCHEMATIC WIRING DIAGRAM
EL-11 PLC CONTROL PANEL ARRANGEMENT AND BILL OF MATERIALS
EL-12 SHT. 2 PLC CONTROL PANEL POWER DISTRIBUTION DIAGRAM

SCALE VERIFICATION: THIS BAR MEASURES 1" ON ORIGINAL. ADJUST SCALE ACCORDINGLY.

No	Revision	Date	Initial
3	FINAL 100% DESIGN	10/12/10	JJ
2	REISSUED 95% SUBMITTAL	02/01/10	JJ
1	95% SUBMITTAL	12/30/09	JJ

RADIO MATERIALS
ATTICA, INDIANA

GROUNDWATER REMEDIATION SYSTEM

PLC CONTROL PANEL
DIGITAL INPUT WIRING DIAGRAM

CONESTOGA-ROVERS & ASSOCIATES

Source Reference			Date: DECEMBER 2009
Project Manager: S. WANNER	Reviewed By: J. GEE	Designed By: J. MICHALOWSKI	Drawn By: J. FAUTLER
Scale: NONE	Project No: 19190-10	Report No: 041	Drawing No: EL-12 SHT. 11

19190-10(041)EL-BU022 JAN 28/2010

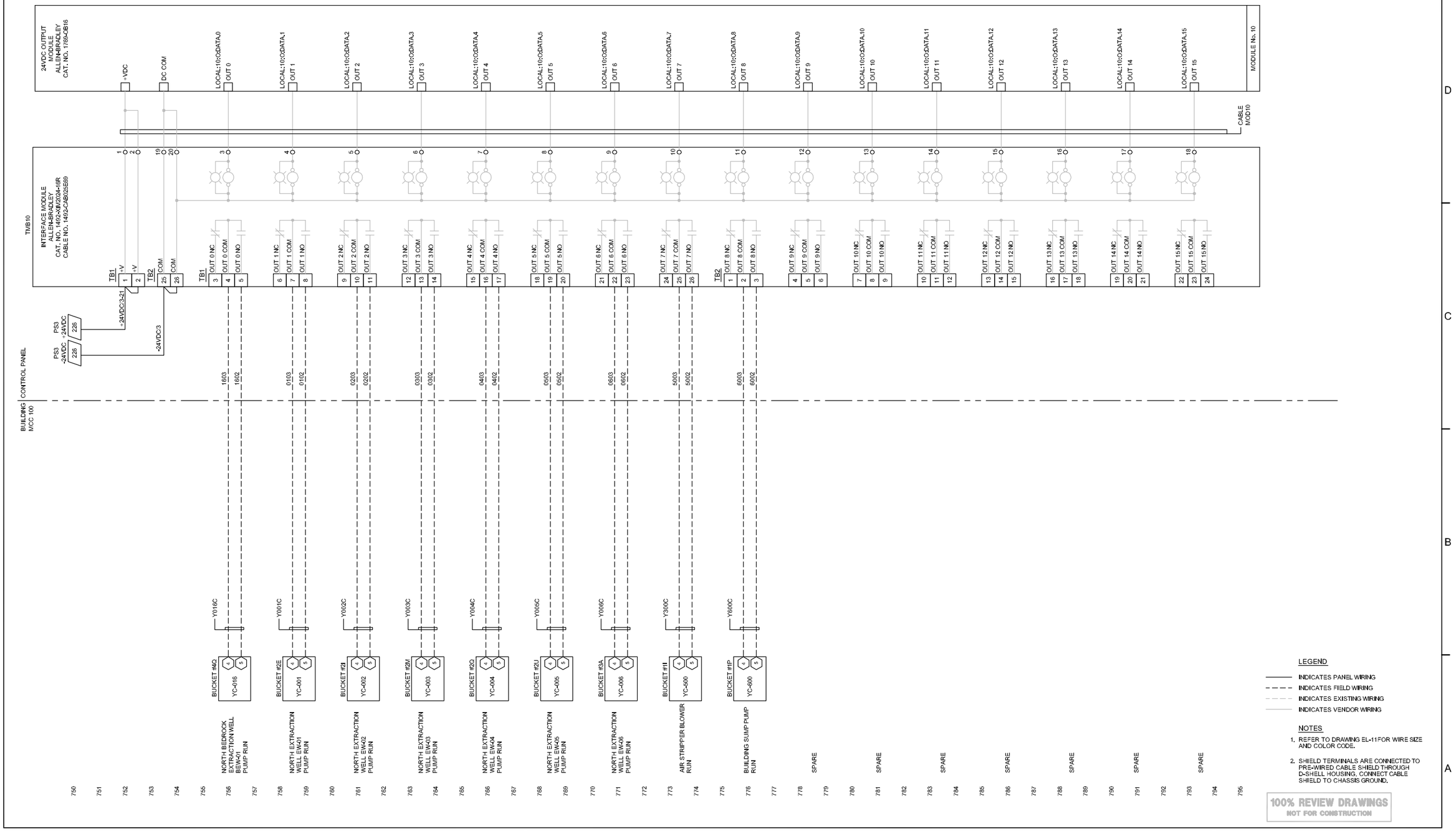

REFERENCE DRAWINGS

EL-08 SHT 1 TREATMENT BUILDING SCHEMATIC WIRING DIAGRAM
EL-09 TREATMENT BUILDING SCHEMATIC WIRING DIAGRAM
EL-08 SHT 2 TREATMENT BUILDING SCHEMATIC WIRING DIAGRAM
EL-11 PLC CONTROL PANEL ARRANGEMENT AND BILL OF MATERIALS
EL-12 SHT. 2 PLC CONTROL PANEL POWER DISTRIBUTION DIAGRAM

SCALE VERIFICATION: THIS BAR MEASURES 1" ON ORIGINAL. ADJUST SCALE ACCORDINGLY.

No	Revision	Date	Initial
3	FINAL 100% DESIGN	10/12/10	JJ
2	REISSUED 95% SUBMITTAL	02/01/10	JJ
1	95% SUBMITTAL	12/30/09	JJ

RADIO MATERIALS
ATTICA, INDIANA

GROUNDWATER REMEDIATION SYSTEM

PLC CONTROL PANEL
RELAY OUTPUT WIRING DIAGRAM

CONESTOGA-ROVERS & ASSOCIATES

Source Reference(s)			Date: DECEMBER 2009
Project Manager: S. WANNER	Reviewed By: J. GEE	Designed By: J. MICHALOWSKI	Drawn By: J. FAUTLER
Scale: NONE	Project No: 19190-10	Report No: 041	Drawing No: EL-12 SHT. 12

19190-10(041)EL-BU023 JAN 28/2010

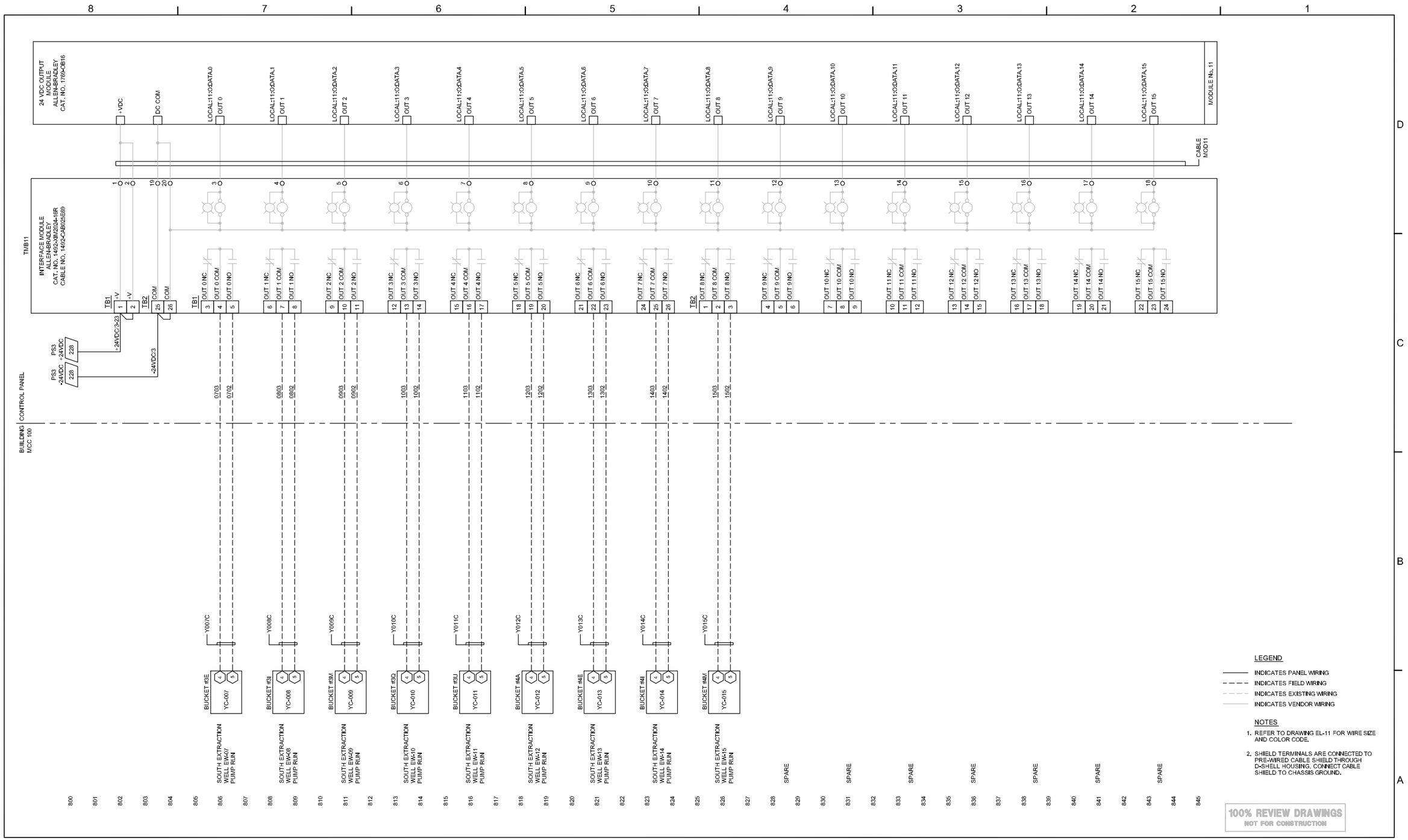

REFERENCE DRAWINGS

EL-08 SHT 1 TREATMENT BUILDING SCHEMATIC WIRING DIAGRAM
EL-09 TREATMENT BUILDING SCHEMATIC WIRING DIAGRAM
EL-08 SHT 2 TREATMENT BUILDING SCHEMATIC WIRING DIAGRAM
EL-11 PLC CONTROL PANEL ARRANGEMENT AND BILL OF MATERIALS
EL-12 SHT. 2 PLC CONTROL PANEL POWER DISTRIBUTION DIAGRAM

SCALE VERIFICATION: THIS BAR MEASURES 1" ON ORIGINAL. ADJUST SCALE ACCORDINGLY.

No	Revision	Date	Initial
3	FINAL 100% DESIGN	10/12/10	JJ
2	REISSUED 95% SUBMITTAL	02/01/10	JJ
1	95% SUBMITTAL	12/30/09	JJ

RADIO MATERIALS
ATTICA, INDIANA

GROUNDWATER REMEDIATION SYSTEM

PLC CONTROL PANEL
RELAY OUTPUT WIRING DIAGRAM

CONESTOGA-ROVERS & ASSOCIATES

Source Reference:			Date: DECEMBER 2009
Project Manager: S. WANNER	Reviewed By: J. GEE	Designed By: J. MICHALOWSKI	Drawn By: J. FAUTLER
Scale: NONE	Project No: 19190-10	Report No: 041	Drawing No: EL-12 SHT. 13

19190-10(041)EL-BU024 JAN 28/2010

TABLE OF CONTENTS

PROJECT SPECIFICATIONS

DIVISION 1 – ADMINISTRATIVE

01400 QUALITY REQUIREMENTS
01630 SUBSTITUTIONS
01650 FIELD TESTS OF EQUIPMENT
01660 STARTING OF SYSTEMS
01700 EXECUTION REQUIREMENTS
01800 FACILITY OPERATIONS

DIVISION 2 – SITE CONSTRUCTION

02221 TRENCHING, BACKFILLING, AND COMPACTING
02315 EXCAVATION
02521 DRILLING AND WELL/PIEZOMETER INSTALLATIONS

DIVISION 3 – CONCRETE

03300 CAST-IN-PLACE CONCRETE

DIVISION 5 – METALS

05120 STRUCTURAL STEEL

DIVISION 9 – FINISHES

09900 PAINTS AND COATINGS

DIVISION 11 – EQUIPMENT

11231 LOW PROFILE AIR STRIPPER

DIVISION 13 – SPECIAL CONSTRUCTION

13121 PRE-ENGINEERED BUILDING INSTALLATION
13200 EQUILIZATION TANK

DIVISION 15 – MECHANICAL

15051 BURIED PIPING INSTALLATION
15235 PUMPS
15410 PROCESS PIPING AND VALVES

DIVISION 16 – ELECTRICAL

16075 ELECTRICAL IDENTIFICATION
16120 WIRE AND CABLE
16140 WIRING DEVICES
16265 480VAC VARIABLE FREQUENCY DRIVES
16680 SURGE PROTECTION

DIVISION 17 – INSTRUMENTATION

17420 INSTRUMENTS
17431 CONTROL PANELS
17451 PROGRAMMABLE CONTROLLERS

SECTION 01400

QUALITY REQUIREMENTS

1.1 SECTION INCLUDES

A. Quality control.

B. Tolerances.

C. References.

D. Inspecting and testing services.

E. Manufacturers' field services and reports.

F. Measurement and payment.

1.2 QUALITY CONTROL

A. Monitor quality control over Suppliers, products, services, the Site conditions, and workmanship, to produce Works of specified quality.

B. Comply with manufacturers' instructions, including each step in sequence.

C. Should manufacturers' instructions conflict with the contract documents, we request clarification from ENGINEER before proceeding.

D. Comply with specified standards as minimum quality for the Works except where more stringent tolerances, codes, or specified requirements indicate higher standards or more precise workmanship.

E. Perform work by persons qualified to produce workmanship of specified quality. Use persons licensed to perform the Works where required by these Specifications or Laws and Regulations.

F. Secure products in place with positive anchorage devices designed and sized to withstand stresses, vibration, physical distortion, or disfigurement.

G. Materials furnished and finished or intermediate stages of the Works shall be sampled, tested, and inspected as specified in individual Sections and as required by reference standards.

1.3 TOLERANCES

A. Monitor tolerance control of installed products to produce acceptable Works. Do not permit tolerances to accumulate.

B. Comply with manufacturers' tolerances. Should manufacturers' tolerances conflict with the contract documents, request clarification from ENGINEER before proceeding.

C. Adjust products to appropriate dimensions; position before securing products in place.

1.4 REFERENCES

A. For products or workmanship specified by association, trade, or other consensus standards, comply with requirements of the standard, except when more rigid requirements are specified or are required by applicable Laws and Regulations.

B. Specific provisions of Laws or Regulations may be referenced in the Project Specifications to assist CONTRACTOR and identify options selected by ENGINEER. Such references do not relieve CONTRACTOR from compliance with other applicable provisions of Laws or Regulations not specifically referenced.

C. No inference or provision of any reference document including but not limited to any standard specification, manual, or code shall be effective to change the relationships, duties, and responsibilities of OWNER, CONTRACTOR, or ENGINEER from those set forth in the contract documents, nor shall it be effective to assign to OWNER or ENGINEER any duty or authority to supervise or direct the furnishing or performance of the Works or any duty or authority to undertake responsibility inconsistent with the provisions of the contract.

D. Publications referred to in these Specifications form part of the Specifications to the extent specified in individual Sections.

E. In case of conflict or discrepancy between a reference standard and the Project Specifications or with another reference standard, the more stringent requirements shall apply.

F. Should specified reference standards conflict with the contract documents, we request clarification from ENGINEER before proceeding.

1.5 INSPECTING AND TESTING SERVICES

A. OWNER shall employ and pay for services of an independent inspecting company and testing laboratory to perform inspecting and testing services as specified in individual Sections.

B. CONTRACTOR Responsibilities:

1. Deliver to inspecting company and testing laboratory at designated location, adequate samples of materials proposed to be used which require testing, along with proposed mix designs for concrete, and other material mixes that require testing by inspecting and testing laboratory.

2. Cooperate with personnel of independent inspecting company and testing laboratory, and provide safe access to the Works and to manufacturer's operations.

3. Provide incidental labor and facilities:

    1. To provide access to the Works to be tested.
    2. To obtain and handle samples at the Site or at source of products to be tested.
    3. To facilitate tests and inspections.
    4. For inspecting company and testing laboratory's exclusive use for storage and curing of test samples.
    5. Forms for preparing concrete test beams and cylinders.

4. Notify ENGINEER and inspecting company and testing laboratory 24 hours prior to expected time for operations requiring inspecting and testing services to allow for assignment of personnel and scheduling of tests.

5. Furnish copies of product test reports.

6. Promptly notify ENGINEER of all observed irregularities or non-conformance of the Works.

7. Retesting required because of CONTRACTOR negligence or non-conformance to specified requirements shall be performed by the same inspecting and testing laboratory on instructions by ENGINEER at CONTRACTOR's expense and at no additional cost to OWNER.

8. If defects or deficiencies are revealed during testing or inspecting, correct such defects and deficiencies and retest affected portions of the Works.

1.6 MANUFACTURERS' FIELD SERVICES AND REPORTS

A. When specified in individual Sections, require Suppliers to provide qualified staff personnel to observe Site conditions, conditions of surfaces and installation, quality of workmanship, perform startup of equipment, test, adjust, and balance of equipment and certify operation as applicable, and to initiate instructions when necessary.

B. Submit qualifications of observer to ENGINEER 30 days in advance of required observations. Observer subject to approval of OWNER.

C. Report observations and Site decisions or instructions given to applicators or installers that are supplemental or contrary to manufacturers' written instructions.

D. Submit report within 14 days of observation to ENGINEER for information.

END OF SECTION

SECTION 01630

SUBSTITUTIONS

PART 1 GENERAL

1.01 SECTION INCLUDES

A. Submission Procedures

B. CONTRACTOR responsibilities.

C. Acceptance Criteria.

D. Engineering Costs.

1.02 RELATED SECTIONS

A. All technical sections of these specifications.

1.03 SUBMITTALS

A. Any item substituted as an "or equal" shall be considered a substitution.

B. Within thirty (30) days after execution of Agreement, ENGINEER will consider formal request from CONTRACTOR for substitution of products or construction methods.

C. Within thirty (30) days after execution of Agreement, submit five (5) copies of complete list of products proposed for substitution in the Work tabulated by Sections and with complete data and identification. Include in the submission the following:

1. Complete data substantiating compliance of proposed substitution with Contract Documents.

2. For products:

a. Product identification, including the name and address of the manufacturer.

b. Literature of the manufacturer complete with product description, performance and test data, and reference standards.

c. Samples.

d. Name and address of similar projects on which product was used, and date of installation.

3. For construction methods:

a. Detailed description of proposed method.

b. Drawings illustrating methods.

c. Itemized comparison of proposed substitution with product or method specified.

d. Data relating to changes in construction schedule.

e. Relation to separate contracts, if any.

f. Accurate cost data on proposed substitution in comparison with product or method specified.

1.04 CONTRACTOR'S RESPONSIBILITIES

A. In making request for substitution the CONTRACTOR represents:

1. CONTRACTOR has personally investigated proposed product or method, and determined that it is equal or superior in all respects to that specified.
2. CONTRACTOR will provide the same or better guarantee for substitution as for product or method specified.
3. CONTRACTOR will coordinate installation of accepted substitution into Work, making such changes as required in all respects.
4. Contractor waives all claims for additional costs related to substitution that consequently becomes apparent.
5. Cost data is complete and includes all related costs under this Contract.

1.05 ACCEPTANCE CRITERIA

A. ENGINEER will determine whether substitute brands or products are equal to those specified in the Contract Documents.

B. If the ENGINEER determines that a substitute is not equal to that named in the specification, the CONTRACTOR shall furnish one of the brands or products specified, at no additional cost to the OWNER.

C. Substitutions will not be accepted if:

1. They are only shown or implied on Shop Drawings.
2. Acceptance will require substantial revision of Contract Documents.
3. Substitutions would change design concepts or Specifications.
4. Substitutions would delay completion of the Work.
5. Substitutions involve items for which a manufacturer was declared at time of bidding.
6. Substitution is not compatible with existing equipment.

1.06 ENGINEERING COSTS

A. CONTRACTOR shall reimburse the OWNER for actual evaluation costs of ENGINEER and his consultants if:

1. Proposed substitute does not meet requirements of the Contract Drawings and Specifications and is rejected.
2. Acceptance of proposed substitute requires changes to the Work.

B. CONTRACTOR shall reimburse OWNER for all associated engineering costs, including redesign, additional Shop Drawing reviews, investigations, consultant fees, and revision of the Contract Documents required because of the substitution.

C. Costs of ENGINEER shall be the sum of the following:

1. Salary costs.
2. Overhead costs.
3. Out-of-pocket costs.
4. Consultant fees.

PART 2 PRODUCTS – NOT USED

PART 3 EXECUTION – NOT USED

END OF SECTION

SECTION 01650

FIELD TESTS OF EQUIPMENT

PART 1 - GENERAL

1.01 SECTION INCLUDES

A. Definition of CONTRACTOR'S responsibility in the startup, commission, and testing of equipment installed under this Contract.

1.02 RELATED SECTIONS

A. Section 01010 - Summary of Work.

B. Section 01660 – Starting of Systems.

C. Section 01700 – Contract Closeout.

1.03 SUBMITTALS

A. CONTRACTOR shall submit a testing plan for each piece of equipment for the OWNER'S/ENGINEER'S approval. The plan shall include, at a minimum, items defined below in Preliminary and Final Testing.

1.04 PRELIMINARY TESTS

A. CONTRACTOR shall make preliminary field tests of equipment as soon as conditions permit. This shall include, but not be limited to, the following:

1. Verification, proper and complete, of lubrication.

2. Verification of electric power, wiring phasing and capacity.

3. Verification of mechanical adjustments and alignments (i.e., seals, couplings, bolt tension, etc.).

4. Verification of operation of ancillary systems such as seal water, lube and cooling water systems, etc.

5. Verification of proper rotation.

6. Verification of foundation and anchor integrity.

B. CONTRACTOR shall furnish all water or chemicals, labor, materials, instruments, fuel, incidentals, and expendables required, unless otherwise provided. Locations of temporary connections for obtaining water shall be designated at the time of approval of CONTRACTOR'S proposed testing plan and schedule.

C. CONTRACTOR shall make all changes, adjustments and replacements required to place equipment in service.

D. OWNER shall provide water for initial field test of equipment. If repeated field tests of equipment are necessary, CONTRACTOR shall pay to the OWNER all costs for water supplied.

E. ENGINEER shall be given sufficient prior notice to witness tests.

1.05 FINAL TESTS

A. Upon completion of the Work, but prior to final acceptance, CONTRACTOR shall perform final field testing on all equipment.

B. CONTRACTOR shall provide the services of the manufacturer's field service representative for the duration of final testing. The field services representative shall be knowledgeable in the startup and troubleshooting of the equipment, and be capable of inspection of equipment installation and approval of the same for operation and acceptable installations.

C. Purpose of the tests is to demonstrate that equipment is:

1. Properly installed. This shall include, but not be limited to, the following:

a. Equipment operates within vibration and temperature tolerances.

b. Equipment can complete intended operation without bending or overload.

2. Completely ready for operation by the OWNER. This shall include, but not be limited to, the following:

a. All controls are in place and function properly, as designed. Equipment sequence, as specified.

b. All subsystems in place and function properly, as designed.

3. In compliance with design conditions and all other Contract Document requirements. This shall include, but not be limited to, the following:

a. Pumps operate at specified design condition through these ranges of operations.

b. Filters and filter backwashes operate at specified design conditions through these ranges of operations.

c. Miscellaneous instruments operate at specified design conditions through these ranges of operations.

d. Heating, ventilation, dehumidification, and cooling equipment operate as specified.

D. CONTRACTOR shall furnish all labor, materials, instruments, and expendables required for the tests.

E. Until final field tests are completed and approved, CONTRACTOR shall make all necessary changes, adjustments and replacements.

F. CONTRACTOR shall submit a written report of equipment testing including alignment results, lubrication verification (quantity and type), etc.

G. CONTRACTOR shall notify ENGINEER at least 24 hours prior to beginning of tests. CONTRACTOR shall keep notes and data on tests and submit copy to the ENGINEER. ENGINEER and OWNER'S operating personnel shall witness all tests.

PART 2 - PRODUCTS – NOT USED.

PART 3 - EXECUTION – NOT USED.

SECTION 01660

STARTING OF SYSTEMS

PART 1 - GENERAL

1.01 SECTION INCLUDES

A. Starting systems.

B. Demonstration and instructions.

1.02 RELATED SECTIONS

A. Section 01010 – Summary of Work.

B. Section 01700 - Contract Closeout.

C. Section 01650 - Field Tests of Equipment.

1.03 SUBMITTALS

A. CONTRACTOR shall submit a System Startup Plan for each system for the OWNER/ENGINEER'S approval. The Plan shall include at a minimum equipment involved, required personnel involvement, schedule, and proposed startup methodology.

1.04 STARTING SYSTEMS

A. Coordinate schedule for start-up of various equipment systems with the OWNER and all other CONTRACTORS involved in the installation and successful completion of the system.

B. Notify the ENGINEER and OWNER a minimum of seven (7) days prior to start-up of each item.

C. Verify field testing of equipment within the system is complete (refer to Section 01650).

D. Execute startup of systems under supervision of applicable personnel (either the personnel of the CONTRACTOR or the personnel of the manufacturer as specified in the individual technical Specification Sections) in strict accordance with the instructions of the manufacturer.

E. Systems at a minimum shall be cycled through a complete sequence from start to finish, all safety interlocks and controls shall be verified, system capacity and volumes shall be confirmed.

F. Submit a written report that equipment or system has been properly installed and is functioning correctly.

1.05 DEMONSTRATION AND INSTRUCTIONS

A. Demonstrate operation and maintenance of products to the personnel of the OWNER a minimum of two (2) weeks prior to date of Substantial Completion.

B. Demonstrate new project equipment and instruct the personnel of the OWNER in a classroom type environment by a qualified representative of the manufacturer who is knowledgeable about the project.

C. For equipment or systems requiring seasonal operation, perform demonstration for other season prior to the beginning of the season when the equipment will be utilized.

D. Utilize operation and maintenance manuals as basis for instruction. Review contents of manual with the personnel of the OWNER.

E. Demonstrate start-up, operation, control, adjustment, trouble-shooting, servicing, maintenance, and shutdown of each item of equipment at the agreed upon time, at a designated location.

F. Prepare and insert additional data in operations and maintenance manuals when need for additional data becomes apparent during instruction.

PART 2 – PRODUCTS – NOT USED

PART 3 – EXECUTION – NOT USED

END OF SECTION

SECTION 01700

EXECUTION REQUIREMENTS

1.1 SECTION INCLUDES

A. Examination.

B. Preparation.

C. Field surveying.

D. Restoration.

E. Progress cleaning.

F. Final cleaning.

G. Removal and disposal.

H. Starting and adjusting.

I. Protection of installed work.

J. Closeout procedures.

K. Project record documents.

L. Spare parts, maintenance materials, and extra materials.

M. Operation and maintenance data.

N. Warranties.

O. Measurement and payment.

1.2 EXAMINATION

A. Prior to commencement of work at the Site, inspect the Site with ENGINEER to review and establish the condition of surface features including existing roads, parking areas, buildings, wells, trees and other plants, grassed areas, fencing, service poles, wires, paving, and survey bench marks or monuments on or adjacent to the Site which may be affected by the Works. This inventory shall be mutually agreed between ENGINEER and CONTRACTOR and shall not thereafter be subject to dispute. Such inventory as may be amended, from time to time, will be used by ENGINEER to check compliance by CONTRACTOR with the requirements of the contract documents.

B. Provide ongoing review, inspection, and attendance during performance of the Works to properly document conditions. Promptly inform ENGINEER of any existing condition at the Site affected by the Works, which may require restoration, repair, or replacement. Do not cover up any of the Works without prior approval from ENGINEER.

C. Maintain and protect existing Site structures and facilities from damage which may be affected by the Works while work is in progress. Repair or replace damage resulting from the Works to ENGINEER's approval.

D. Verify that existing Site conditions and substrate surfaces are acceptable for subsequent work. Beginning new work means acceptance by CONTRACTOR of existing conditions.

E. Verify that existing substrate is capable of structural attachment of new work being applied or attached or that existing or previously constructed surfaces are ready to receive subsequent work.

F. Examine and verify specific conditions described in individual Sections.

G. Verify that utility services are available, of the correct characteristics, and in the correct location.

1.3 PREPARATION

A. Clean substrate surfaces prior to applying next material or substance.

B. Seal cracks or openings of substrate prior to applying next material or substance.

C. Apply manufacturer required or recommended substrate primer, sealer, or conditioner prior to applying new material or substance in contact or bond.

1.4 FIELD SURVEYING

A. Quality Assurance:

1. Employ a land surveyor registered in the State of Indiana and acceptable to ENGINEER to perform survey work of this Article.
2. ENGINEER may, at any time, check CONTRACTOR's survey and layout work but this shall not relieve CONTRACTOR of any of its responsibilities to carry out the Works to the lines and grades set out in accordance with the Drawings and the Project Specifications or as otherwise necessary for performance of the Works in accordance with the contract documents.

B. Record Documents:

1. Maintain a complete and accurate log of control and survey work as it progresses.
2. Prepare a certified survey illustrating dimensions, locations, angles, and elevations of construction, and the Site work.
3. Submit record documents under provisions of Article 1.12.

C. Survey Reference Points:

1. Locate, preserve, and protect survey control and reference points.
2. Control datum for survey is that established by OWNER.
3. Promptly report to ENGINEER the loss or destruction of any reference point or relocation required because of changes in grades or other reasons.
4. Make good any errors entering into the Works through CONTRACTOR failure to notify ENGINEER concerning lack of preservation of such survey reference points.
5. Accurately replace or relocate disturbed reference or survey control points based on original survey control. Make no changes without prior written notice to and approval of ENGINEER.

D. Survey Requirements:

1. Utilize recognized engineering survey practices. Locate and lay out the Works using properly calibrated instrumentation.
2. Establish elevations, lines, and levels.
3. Periodically verify layouts by same means and methods.

4. Establish a minimum of two temporary bench marks on the Site, referenced to established control points. Record locations, with horizontal and vertical data, on Project record documents.
5. Provide reasonable and necessary opportunities and facilities for setting points and making measurements during construction.
6. Develop and make such additional detailed surveys as are needed for construction, such as bench marks, slope stakes, batterboards, stakes for establishing the design elevations of excavations and final grades, and other working points, lines, and elevations. Maintain bench marks and base lines established, existing property boundaries, lines and grade hubs, and other references and construction or survey points.

1.5 RESTORATION

A. As a minimum, restoration shall mean replacement, repairs, or reconstruction to a condition at least as good as or better than the condition prior to commencement of the Works.

B. Except where specifically required otherwise by other Sections, restore areas of the Works and areas affected by the performance of the Works to conditions that existed prior to commencement of the Works and to match condition of similar adjacent, undisturbed areas.

C. Ensure that restored areas match existing grade and surface drainage characteristics, except as otherwise specified, and ensure a smooth transition from restored surfaces to existing surfaces.

D. Do not alter original conditions without prior written approval from ENGINEER.

E. Without limiting the generality of the foregoing or other requirements of the contract documents, preserve and protect existing features encountered at the Site during the performance of the Works including, but not limited to buildings, wells, structures, curbs and gutters, fences, pavement, manholes and catch basins, utilities, railroad sidings, roads, streets, walks, grassed areas, and other graded or improved areas.

F. Utilize construction methods and procedures during the performance of the Works which keeps disturbance and damage of whatever nature to existing conditions to the practical minimum. Where work necessitates root or branch cutting, do not proceed without ENGINEER's prior approval.

G. Ensure that quality, grades, elevations, and extent of bedding, cover, and other backfill materials including subgrades, finish grades, and thickness of pavements for roadways and parking areas are properly documented during their removal to ensure reconstruction to at least their original and functional condition.

H. Restoration Material: New, except as otherwise specified, not damaged or defective, and of the best quality for the purpose intended. Furnish evidence as to type, source, and quality of materials or products furnished when requested by ENGINEER or specified in other Sections.

I. Should any dispute arise as to the quality or fitness of materials, whether obtained on the Site or off the Site, whether previously inspected by ENGINEER prior to use or not, the decision to use any material or product in the finished Works will rest solely with ENGINEER.

J. Remove from the Site clean material not approved for reuse.

K. Handle and store products and materials in a manner to prevent damage, adulteration, deterioration, and soiling and in accordance with manufacturer's instructions when applicable.

L. Prior to commencement of restoration work, inform ENGINEER of proposed material, methods, and procedures to repair, replace, or reconstruct disturbed, damaged, or suspected damage to the Works.

M. Perform cutting, fitting, remedial, and coordination work to make the several parts of the Works fit together.

N. Except as specified otherwise, dismantle and salvage materials for reuse where practicable. Exercise due care when removing material for salvage. Repair or replace materials damaged through improper handling or through loss after removal.

O. Store and protect removed material approved for reuse in approved locations. Beginning of restoration work means acceptance of existing conditions.

P. Unless otherwise specified, restore pavement by:

1. Removing and replacing the entire portions between joints or scores and not merely refinishing or patching localized areas.
2. Saw cutting surfaces, curbs and gutters, and similar structures or surfaces.
3. Protecting adjacent joints and load transfer devices and underlying granular materials.

1.6 PROGRESS CLEANING

A. Execute cleaning during progress of the Works as required, but no less than daily.

B. Requirements of Regulatory Agencies:

1. In addition to the requirements herein, maintain the cleanliness of the Works and surrounding premises within the Works limits so as to comply with federal, state, and local fire and safety laws, ordinances, codes, and regulations.
2. Comply with all federal, state, and local anti-pollution laws, ordinances, codes, and regulations when disposing of waste materials, debris, and rubbish.

C. Coordinate cleaning operations with disposal operations to prevent accumulation of dust, dirt, debris, rubbish, and waste materials on or within the Works or on the premises surrounding the Works.

1.7 FINAL CLEANING

A. Execute final cleaning prior to Substantial Completion of the Works.

B. Clean interior and exterior glass, surfaces exposed to view; remove temporary labels, stains and foreign substances, polish transparent and glossy surfaces.

C. Clean equipment and fixtures to a sanitary condition with cleaning materials appropriate to the surface and material being cleaned.

D. Clean debris from roofs, gutters, downspouts, and drainage systems.

E. Clean the Site; sweep paved areas, and rake clean landscaped surfaces.

F. Repair pavement, roads, sod, and all other areas affected by construction operations and restore them to original condition or to minimum condition specified.

G. Maintain cleaning until acceptance and occupation by OWNER.

1.8 REMOVAL AND DISPOSAL

A. Remove surplus materials and temporary facilities and controls from the Site.

B. Dispose of all non-contaminated waste materials, litter, debris, and rubbish off Site.

C. Do not burn or bury rubbish and waste materials on the Site.

D. Do not dispose of volatile or hazardous wastes such as mineral spirits, oil, or paint thinner in storm or sanitary drains.

E. Do not discharge wastes into streams or waterways.

F. Dispose of the following materials at an appropriate off-Site facility identified by CONTRACTOR and approved by OWNER:

1. Debris including excess construction material, non-contaminated litter and rubbish.
2. Spent Tyvek and other disposable PPE worn during final cleaning.
3. Soil cuttings.
4. Well development water.

G. Dispose of materials in accordance State of Indiana regulations and local requirements and as directed by ENGINEER.

1.9 STARTING AND ADJUSTING

A. Adjust operating products and equipment to ensure smooth and unhindered operation.

1.10 PROTECTION OF INSTALLED WORK

A. Protect installed work and provide special protection where specified in individual Sections.

B. Provide temporary and removable protection for installed products. Control activity in immediate work area to prevent damage.

C. Provide protective coverings at walls, projections, jambs, sills, and soffits of openings.

D. Protect finished floors, stairs, and other surfaces from traffic, dirt, wear, damage, or movement of heavy objects, by protecting with durable sheet materials.

E. Prohibit traffic or storage upon waterproofed or roofed surfaces. If traffic or activity is necessary, obtain recommendations for protection from waterproofing or roofing material manufacturer.

F. Prohibit traffic upon landscaped areas.

G. Maintenance of Flow: Maintain the flow of water in the water distribution system and in existing sewers, drains, and watercourses. In the event that any emergency or situation should arise which requires interruption of normal operation of any existing systems, restore normal operation as soon as possible even though permission for such planned shutdown was obtained.

H. Flotation: Take necessary precautions against the flotation of any structures during construction. Make good any damage caused by flotation.

1.11 CLOSEOUT PROCEDURES

A. Submit written certification that the contract documents have been reviewed, the Works has been inspected, and that the Works is complete in accordance with the contract documents and in compliance with Laws and Regulations including, but not limited to, the provision of all applicable federal, state, and local health, safety, and environmental laws and regulations, including OSHA, and ready for ENGINEER's review.

B. Submit final Application for Payment identifying previous payments and amounts remaining due.

C. Complete and furnish submittals to ENGINEER that are required by governing or other authorities and by the contract documents. Payment shall not become due and payable until all submittals have been made acceptable to ENGINEER.

1.12 PROJECT RECORD DOCUMENTS

A. Maintain one set of the following record documents on the Site; record actual revisions to the Works:
   1. Drawings.
   2. Specifications.
   3. Change Orders and other modifications to the contract.
   4. Reviewed Shop Drawings, product data, and Samples.
   5. Manufacturer's instruction for assembly, installation, and adjusting.

B. Ensure entries are complete and accurate, enabling future reference by OWNER.

C. Store record documents separate from documents used for construction.

D. Record information concurrent with construction progress.

E. Specifications: Legibly mark and record, at each Section of the Specifications, a description of actual products installed, including the following:

   1. Manufacturer's name and product model and number.
   2. Product substitutions or alternates utilized.
   3. Changes made by modifications.

F. Record Documents and Shop Drawings: Legibly mark each item to record actual construction including:

   1. Measured depths of foundations in relation to finished floor datum.
   2. Measured horizontal and vertical locations of underground utilities and appurtenances, referenced to permanent surface improvements.
   3. Measured locations of internal utilities and appurtenances concealed in construction, referenced to visible and accessible features of the Works.
   4. Field changes of dimension and detail.
   5. Details not on original Drawings.

G. Remove ENGINEER title block and seal from all documents generated by CONTRACTOR.

H. Submit documents to ENGINEER.

1.13 SPARE PARTS, MAINTENANCE MATERIALS, AND EXTRA MATERIALS

A. Provide products, spare parts, maintenance, and extra materials in quantities specified in individual Sections.

B. Deliver to the Site or other location to be specified; obtain receipt from ENGINEER or OWNER.

C. Provide list of spare parts and maintenance and extra materials furnished prior to final payment.

1.14 OPERATION AND MAINTENANCE DATA

A. Submit data bound in 8 1/2 by 11-inch text pages, 3-D side ring binders with durable plastic covers.

B. Prepare binder cover with printed title "OPERATION AND MAINTENANCE INSTRUCTIONS", title of Project, and subject matter of binder when multiple binders are required.

C. Internally subdivide the binder contents with permanent page dividers, logically organized as described below; with tab titling clearly printed under reinforced laminated plastic tabs.

D. Contents: Prepare a Table of Contents for each volume, with each product or system description identified, typed on white paper, in three parts as follows:

1. Part 1: Directory, listing names, addresses, and telephone numbers of ENGINEER, CONTRACTOR, Subcontractors, and major equipment Suppliers.

2. Part 2: Operation and maintenance instructions, arranged by process flow and subdivided by component. For each category identify names, addresses, and telephone numbers of Subcontractors and Suppliers. Identify the following:

    1. Significant design criteria.
    2. List of equipment.
    3. Parts list for each component.
    4. Operating instructions.
    5. Maintenance instructions for equipment and systems.

3. Part 3: Project documents and certificates, including the following:

    1. Shop Drawings and product data.
    2. Certificates.
    3. Photocopies of warranties and bonds.

E. Submit two draft copies of completed volumes 15 days prior to final inspection. These copies will be reviewed and returned, with ENGINEER's comments. Revise content of all document sets as required prior to final submission.

F. Submit three sets of revised final volumes within 15 days after final inspection.

1.15 WARRANTIES

A. Obtain warranties, executed in duplicate by responsible Subcontractors and Suppliers within 14 days after completion of the applicable item of work. Except for items put into use with OWNER's permission, leave date of beginning of time of warranty open until the date of Substantial Completion is determined.

B. Verify that documents are in proper form, contain full information, and are notarized.

C. Co-execute submittals when required.

D. Retain warranties until time specified for submittal.

E. Bind in commercial quality 8 1/2 by 11-inch 3-D side ring binders with durable plastic covers. Identify each binder with typed title WARRANTIES, with title of Project; name, address, and telephone number of CONTRACTOR and equipment Supplier; and name of responsible company principal. Neatly type Table of Contents, in the sequence of the Table of Contents of the contract documents, with each item identified with the number and title of the Section in which specified, and the name of the project or work item. Separate each warranty with index tab sheets keyed to the Table of Contents listing. Provide full information, using separate typed sheets as necessary. List Subcontractor and Supplier, with name, address, and telephone number of responsible principal.

F. Make submittals within 10 days after the date of Substantial Completion.

G. For items of the Works for which acceptance is delayed beyond the date of Substantial Completion, furnish updated submittal within 10 days after acceptance of the affected item. The date of acceptance of such item shall be the start of the warranty period for that item.

END OF SECTION

SECTION 01800

FACILITY OPERATION

1.1 SECTION INCLUDES

A. Definitions.

B. Progress submittals.

C. Closeout submittals.

D. Qualifications.

E. Pre-commissioning meeting.

F. Sequencing and scheduling.

G. Manufacturer's field services.

H. Commissioning.

I. Demonstration.

J. Training.

K. Turnover.

L. Commissioning report.

M. Schedules.

N. Measurement and payment.

1.2 DEFINITIONS

A. For commissioning purposes, the term "facility" means the Works of this contract entirely.

B. The term "commission" or "commissioning" means the overall process of starting, testing, adjusting, and balancing the various components, equipment, and subsystems of the facility to place the facility into a fully operational condition.

1.3 PROGRESS SUBMITTALS

A. Submit, 14 days prior to start of commissioning, 2 draft copies of the operations and maintenance manuals in accordance with Section 01700.

B. Submit, 14 days prior to start of commissioning, a written procedure to be followed in commissioning the facility, indicating order of specific component, equipment, or subsystems to be commissioned, personnel or resources required, and expected time for each task. Include specific rates, upper and lower limits, duration at each rate, and any special requirements for setup or adjustments to complete each specific task. Indicate any deficiencies in the facility that would prevent proper testing, adjusting, and balancing of systems and equipment to achieve specified performance.

C. Submit, 14 days prior to start of commissioning, sample report forms or outlines indicating adjusting, balancing, and equipment data to be recorded, on forms prepared specifically for commissioning of the facility, containing information as outlined in Article 1.14. Record data in U.S. units. Report actual locations of measurements and approximate position of valves.

D. Submit, 7 days prior to start of commissioning, written confirmation that every individual component and piece of equipment has been installed and tested alone and in combination with related components.

E. Certify to ENGINEER that the facility has been fully and successfully commissioned, prior to start of demonstration period.

1.4 CLOSEOUT SUBMITTALS

A. Section 01700 - Execution Requirements: Requirements for closeout submittals.

B. Submit, within 14 days after completion of commissioning, 2 draft copies of the commissioning report, covering all aspects of the starting, testing, adjusting, and balancing of the individual components, equipment, and subsystems of the facility. Include all completed report forms or outlines, for review and approval of ENGINEER.

1.5 QUALIFICATIONS

A. Provide CONTRACTOR appointed commissioning supervisor, experienced in the installation and operations of the various components, equipment, and subsystems of the facility.

B. Provide personnel experienced in the installation and operations of the various components, equipment, and subsystems of the facility. Personnel to perform work under direct supervision of CONTRACTOR-appointed commissioning supervisor.

1.6 PRE-COMMISSIONING MEETING

A. A pre-commissioning meeting shall be held 7 days prior to commencing work of this Section.

B. Attendance at the pre-commissioning meeting shall include OWNER, ENGINEER, CONTRACTOR-appointed commissioning supervisor, and key CONTRACTOR personnel involved with the commissioning of the Works.

1.7 SEQUENCING AND SCHEDULING

A. Other Sections of the Specifications may contain specific installation, lubrication, cleaning, disinfecting, checking, testing, setting, calibration, adjusting, balancing, or operations requirements, which are to be followed in conjunction with this Section.

B. Every individual component and piece of equipment shall be tested alone and in combination with related components (subsystems) to ensure that the component and the subsystem are in perfect operating condition, comply with specified requirements, and are ready for incorporation in the overall system and entire facility operations.

C. Coordinate schedule for startup and testing of various equipment and systems. Follow the procedure and schedule established for commissioning unless otherwise approved by ENGINEER.

D. Schedule and provide assistance in final adjustment and testing of the fire and security systems with the ENGINEER and local authority.

1.8 MANUFACTURER'S FIELD SERVICES

A. Manufacturer's field services for equipment as specified in other Sections.

1.9 COMMISSIONING

A. Commissioning shall normally proceed in 4 steps:

1. Commissioning of individual components and equipment forming subsystems, ready for subsystem operations.
2. Commissioning of subsystems and the overall facility in its entirety.
3. Demonstration and training of the operations of individual components, equipment, subsystems, and the overall facility.

4. Turn over of facility to OWNER.

B. Commissioning shall be performed by CONTRACTOR, in the presence of ENGINEER and OWNER's personnel. CONTRACTOR's appointed commissioning supervisor is to lead the commissioning group of CONTRACTOR personnel, Subcontractor personnel, and manufacturer/Supplier representatives.

C. During the commissioning and demonstration period, only CONTRACTOR shall operate the facility, ENGINEER and OWNER's personnel shall only observe and receive operations instructions.

D. Starting Systems and Testing:

1. Verify that each component, piece of equipment, or subsystem has been checked for all required connections, proper lubrication, drive rotation, alignment, belt tension, control sequence, safety devices, operating speed, leakage, or for other conditions which may cause damage.
2. Verify that tests, meter readings, and specified electrical and mechanical characteristics for equipment, instruments, and systems, agree with those required by the equipment or system manufacturer. Verify wiring and support components for equipment are completed and tested. Record data for startup and testing against various requirements on prescribed forms.
3. Provide instruments required for testing, adjusting, and balancing operations. Make instruments available to ENGINEER and OWNER's personnel to facilitate spot checks.
4. Simulate flow, level, or other signals as needed to troubleshoot the control system. Include the manual or automatic activation of field devices. Verify operations of alarms and related failure logic.
5. Starting systems and testing will be performed by qualified technician or manufacturer's representative who is knowledgeable about the equipment or subsystem under direction of CONTRACTOR's commissioning supervisor.
6. Execute startup under supervision of CONTRACTOR's personnel in accordance with manufacturer's instructions. Record performance of equipment, instrumentation, and systems at startup.

E. Adjusting and Balancing:

1. Adjusting and balancing to be performed under direction of CONTRACTOR's commissioning supervisor by qualified technician or manufacturer's representative knowledgeable about the specific equipment or subsystem.
2. Ensure recorded data represents actual measured or observed conditions.
3. Mark settings of valves, dampers, and other adjustment devices, allowing settings to be restored. Set and lock any memory stops.

4. After adjustment, take measurements to verify balance has not been disrupted or that such disruption has been rectified.
5. Leave systems in proper working order, replacing belt guards, closing access doors, replacing switch box covers, and restoring systems to specified settings.

F. Fulfillment of commissioning period requires CONTRACTOR operation of the facility as a complete system, at nominal rates, for 7 continuous calendar days, without fault in operations. Training period duration will begin only upon successful completion of the commissioning period.

G. In the event that the commissioning, demonstration, or training period has to be extended because of the malfunctioning of or problems with equipment, CONTRACTOR shall be responsible for all costs arising out of any extension of time at no additional cost to OWNER.

H. Inform all Subcontractors and Suppliers/manufacturers of the requirements herein and include all costs for the required services in the Contract Price. Where a minimum amount of time is stated in the Specifications for a manufacturer's services, any additional time required to perform the specified services satisfactorily shall be at no additional cost to OWNER.

1.10 DEMONSTRATION

A. Demonstrate operations, maintenance, and calibration of each piece of equipment, instrument, and system. Instruction to be by a qualified technician or manufacturer's representative who is knowledgeable about the instrument, equipment, or subsystem.

B. Demonstrate startup, operations, control, adjustment, troubleshooting, servicing, maintenance, and shutdown of each component or piece of equipment at agreed time.

C. During the demonstration period, CONTRACTOR shall demonstrate that operations of the facility as a whole is correct and in accordance with the contract requirements by demonstrating individual components, equipment, and subsystems.

D. All malfunctions, alarms, safety devices, interlocks, and annunciation, which exist as actual field devices or which may exist as programmable logic control (computer programming), shall be demonstrated by simulation of conditions as necessary.

E. Should the demonstration reveal any defects, then such effects shall be promptly rectified by CONTRACTOR and the demonstration of the equipment repeated to the satisfaction of ENGINEER. Should such repeat demonstration require a second or subsequent visit to the Site by ENGINEER and/or OWNER's personnel, then the additional costs incurred shall, at the discretion of ENGINEER, be paid for by CONTRACTOR.

F. All components shall be demonstrated over the entire range of operations specified, including variations in flow, pressures, speeds and controls. See Schedule provided in this Section for summary of performance characteristics criteria.

1.11 TRAINING

A. Provide a training program to OWNER and any designated personnel assigned for operations and maintenance of the facility.

B. Arrange with suppliers of equipment for the provision of a qualified representative to provide training for OWNER's personnel.

C. Coordinate and establish with each Supplier and Subcontractor the time period necessary to complete training of OWNER's staff. The minimum time for any one session to be allowed for by the Supplier shall be four hours.

D. Arrange for the provision of these training sessions by the Supplier and Subcontractor through ENGINEER, who will coordinate the necessary arrangements with OWNER.

E. Provide for two training sessions. The period between such sessions shall be approximately one week, or as mutually agreed between CONTRACTOR and OWNER.

F. Training of OWNER's Personnel:

1. Throughout the commissioning period, provide access to OWNER’s personnel to observe the operations of the facility. OWNER’s personnel will not operate equipment during the commissioning period.
2. Following successful commissioning of the facility, CONTRACTOR shall train two of OWNER's personnel over a period of one week to operate the facility.
3. CONTRACTOR shall:

    1. Demonstrate operations and maintenance of each piece of equipment, instrument, and system.
    2. Utilize operations and maintenance manuals as a basis for training. Review contents of manuals with OWNER's personnel in detail, to explain all aspects of operations and maintenance.
    3. Prepare and insert additional data in operations and maintenance manuals when need for additional data becomes apparent during demonstration or training.
    4. Establish through verbal examination and demonstration, that OWNER's personnel are fully cognizant of the operations and maintenance requirements of the facility.

1.12 TURNOVER

A. Turnover of the facility for operations by OWNER shall occur only upon completion and acceptance of all demonstration and training of the operations of the facility by ENGINEER.

1.13 COMMISSIONING REPORT

A. Commissioning Report shall include:

1. Title Page:

    1. Project name, location, name of ENGINEER and Project reference number, name of CONTRACTOR and Project reference/identification.
    2. Name, address, telephone number, and Project reference/identification of testing, adjusting, and balancing agency, and date of report.

2. Summary Comments:

    1. Design performance versus final performance.
    2. Notable characteristics of system.
    3. Description of system operations sequence.
    4. Summary of flows, from source to outlet, including any internal circulation lines or secondary processes.
    5. Nomenclature used throughout report.
    6. Test conditions.

3. Specific Equipment Test Parameters:

    1. Instrument List: Unique identification tag, instrument name, manufacturer, model number, serial number, range of instrument, and calibration date.
    2. Motor Requirements: Unique identification tag, manufacturer, model/frame, HP/BHP, phase, voltage, amperage (nameplate, actual, and no load conditions), rpm, service

factor, starter size and rating, heater elements, and coupling or direct drive information.

3. Blower Data: Unique identification tag, manufacturer, model, orientation, rpm, and flow rate.
4. Pump Data: Unique identification tag, manufacture, size/model, outlet connection size and type, impeller data, service, flow rate and pressure drop across pump, BHP, discharge pressure, suction pressure, total operating head pressure , discharge and suction pressures at shut off, and total head pressure at shutoff. Note: Provide design and actual data where applicable.
5. Sound Level Report: Location, equipment off conditions, and equipment running conditions (provide for multiple run conditions if applicable). Check sound levels inside building and at property line.
6. Vibration Test Report: Location of test points (equipment bearing drive or opposite end, motor bearing drive or opposite end, casing top or bottom, duct connection after flexible connector on suction or discharge side), test readings, normally acceptable readings, unusual conditions at time of test, and vibration source if non-complying.

B. Include all completed test report forms as an appendix to the commissioning report.

C. Include manufacturer's representative's reports in a separate appendix to the report.

1.14 SCHEDULES

A. Performance test equipment and system in accordance with the following:

Component, Equipment, or Subsystem Commissioning Duration Requirement		*Minimum Rate and Duration*	*Maximum Rate and Duration*	*Nominal Rate and Duration*
1.	Building Sump Pump	- -	- -	50 gpm 4 hours
2.	Air Stripper Blower	- -	- -	10700 scfm 24 hours
3.	Discharge Transfer Pump No. 1	- -	- -	1000 gpm at 230 ft TDH 24 hours
4.	Discharge Transfer Pump No. 2	- -	- -	1000 gpm at 230 ft TDH 24 hours
5.	Discharge Transfer Pump No.	- -	- -	1000 gpm at 230 ft TDH 24 hours
6.	Exhaust Fan	- -	- -	2 days
7.	Unit Heater	- -	- -	2 days
8.	Lighting	- -	- -	2 days
9.	Electrical Panel Heater	- -	- -	2 days
10.	Control Components	- -	- -	2 days
11.	Overall Process/Facility	- -	- -	2,000 USgpm 7 days

END OF SECTION

SECTION 02221

TRENCHING, BACKFILLING AND COMPACTING

PART 1 GENERAL

1.01 SECTION INCLUDES

A. Excavating trenches for piping and utilities.

B. Backfilling and compacting around foundations, under slabs on grade and exterior ramps and pads, site backfilling and backfilling for over-excavation.

1.02 REFERENCES

A. ASTM D 2922 - Density of Soil and Soil-Aggregate in Place by Nuclear Methods (Shallow Depth).

B. ANSI/ASTM D 698 -Test Methods for Moisture-Density Relations of Soils and Soil-Aggregate Mixtures, Using 5.5 lb. (2.49 Kg) Rammer and 12 inch (304.8 mm) Drop.

1.03 SUBMITTALS

A. Materials Sources: Submit name of imported materials source.

B. Fill Composition Test Reports: Results of laboratory tests on proposed and actual materials used.

C. Compaction Density Test Reports.

1.04 QUALITY ASSURANCE

A The Contractor shall employ and pay for services of the independent testing laboratory for tests required to show compliance with the specifications. Test results shall be submitted directly to the Owner Site Representative. Selection of the testing laboratory is subject to approval of the Owner Site Representative.

B Determine moisture density relations of soils encountered during construction in accordance with Standard Proctor Method. Provide graph of Proctor soil density versus water content for reach soil encountered.

C. Provide gradation and materials tests for pipe bedding and stabilizing material.

D. Test trench backfill soil density and moisture at three tests per three foot (3') lift per four-hundred lineal feet (400LF) of trench under pavements.

If trench backfill or pavement subgrade fail density tests, rework backfill or subgrade and retest until specified density is obtained.

E. Jacking, boring, or tunneling Contractor shall be a company specializing in the applicable jacking, boring or tunneling work with a minimum of 5 years and 25 jobs of satisfactory documented experience.

1.05 SITE CONDITIONS

A. Verify that survey benchmark and intended elevations for the Work are as indicated on Drawings.

1.06 GENERAL REQUIREMENTS

A. Remove excess topsoil and excavated material suitable for backfill to location obtained by the Contractor and/or identified by the Owner as shown on construction drawings.

B. Remove brush, rubbish, spoil, and material not suitable for backfill and dispose to an off-site location obtained by Contractor.
   1. Remove waste material promptly as it is generated by construction operations; do not permit it to accumulate. See also "Cleanup," this Section.
   2. Grade disposal areas periodically to reasonably neat surface to provide for drainage and access by others.
   3. Haul routes:
      a. Determine haul roads with approval of agency having jurisdiction over proposed roadway.
      b. Make condition survey of haul roads prior to use and document with necessary photographs and written descriptions.
      c. Keep reasonably free from dirt, dust, mud, and other debris from construction operations.
      d. Clean a minimum of twice a week.
      e. Repair any damaged haul routes to match existing conditions before use.

1.07 EXISTING UTILITIES

A. Before starting operations in any area in the vicinity of utility facilities, notify each utility of any operation which may affect their facilities. Provide notice to each utility sufficiently in advance of such operations to allow the utility time to mark the location of, relocate, adjust, or otherwise protect their facilities. Reach an agreement with each utility on appropriate action necessary to protect or relocate the utility facilities. The cost of such action to protect the facilities, except for locates, be borne by the Contractor. Utilize local state One-Call System, if available, for locates for those utilities which subscribe to this service. Contact all other utilities that do not subscribe to the One-Call System.

B. At all times conduct operation so that necessary clearances are maintained and said utility facilities are protected. Comply with all local, state, and federal, or other regulations in performing work near utility facilities.

C. Should the Contractor damage any of the utility facilities during Contractor's operations or determine the work cannot be performed safely. Immediately notify the utility involved and cease work until arrangements are made to prevent further damage or a serious accident.

D. Failure of the Contractor to provide timely notice to the utility or to conduct his operations in such manner that proper clearances are maintained and the utility facilities are protected at all times will be grounds for the issuance of a Stop Work Order.

E. Notify Engineer of unexpected subsurface conditions and discontinue Work in area until Engineer provides notification to resume work.

1.08 CLASSIFICATION OF MATERIALS

A. Earth: All materials not classified as rock or rubble includes: clay, silt, sand, gravel, hardpan, disintegrated shale and rock debris, junk, brick, loose stones, and boulders less than 1/3 cubic yards in volume.

B. Rock: Buried boulders larger than 1/3 cubic yards in volume or materials so hard and dense that continuous loosening by pneumatic tools or blasting is required for removal.

C. Rubble: Buried concrete foundations, beams, walls, and other materials which require continuous use of pneumatic tools or blasting.

D. Topsoil: Upper portion of soil profile containing a good supply of humus and a high degree of fertility. Topsoil is free of rocks, clods and other debris larger than 2" in diameter.

1.09 1.09 PROJECT RECORD DOCUMENTS

A. Accurately record actual locations of utilities remaining, by horizontal dimensions, elevations or inverts, and slope gradients.

PART 2 PRODUCTS

2.01 BACKFILL AND BEDDING MATERIALS

A. Pipe Bedding and Structural Backfill: Select backfill and bedding for pipes and structures shall be approved select material meeting the following gradation. Material to be free of foreign substance, debris, large stones, rocks (1-1/2 in, 37 mm.), roots, organic or frozen material, expansive material and other deleterious materials. See details on Drawings and/or Typical Detail drawings herein for typical extent of bedding and backfill.

Sieve	Percent Passing
1	100
3/4	90-100
3/8"	50-90
No. 4	35-80
No. 10	25-65
No. 40	10-35
No. 200	3-10

B. Topsoil: Fill upper portion of excavation in grass areas with 4 inches minimum of topsoil.

C. Subbase Material: To consist of approved blast furnace slag, stone, sand and gravel or blends of these materials:

Sieve	Percent Passing
3"	100
2"	90-100
1/4"	30-65
No. 40	5-40
No. 200	0-10

D. Stone top: Material to be free of foreign substance, debris, large stones, rocks (1-1/2 in, 37 mm.), roots, organic or frozen material, expansive material and other deleterious materials. See details on Drawings and/or Typical Detail drawings herein for typical extent of bedding and backfill.

Sieve	Percent Passing
1	100
3/4	90-100
3/8"	50-90
No. 4	35-80
No. 10	25-65
No. 40	10-35
No. 200	3-10

2.02 ACCESSORIES

A. Filter Fabric: Manufacturer's standard non-woven 8 ounce pervious geotextile fabric of polypropylene, nylon or polyester fibers, or a combination.
   1. Provide filter fabrics that meet or exceed the listed minimum physical properties determined according to ASTM D 4759 and the referenced standard test methods in parenthesis:
      a. Grab Tensile Strength (ASTM D 4632): 100 pounds.
      b. Apparent Opening Size (ASTM D 4751): #100 U.S. Standard Sieve.
      c. Permeability (ASTM D 4491): 150 Gallons per minute per square foot.

PART 3 EXECUTION

3.01 GENERAL

A. Trenching and backfilling: All excavation, backfilling, compacting, disposal of surplus material, furnishing additional backfill material, and all other work incidental to the construction of trenches, including any additional excavation.

B. Trench Bottom:
   1. Provide firm, stable and uniform support for full length of pipe.
   2. With acceptable soils, lay pipe on layer of loose material after leveling trench bottom. If no loose material remains, shave soft material from trench walls and compact or granular bedding. *See Part 3.08.*
   3. If trench bottom is rocky or hard, over-excavate trench and place select or granular backfill below pipe. Cushion material shall be the same as the specified bedding material.
   4. When unstable material is encountered, which may not provide a suitable foundation for pipe, remove unsuitable material and replace with stabilizing material.

C. Trees, Hedges and Shrubbery:
   1. Minimize damage caused by construction operations.
   2. Trim and repair trees, hedges, and shrubbery damaged by construction operations; remove broken branches.
   3. Cut no tree roots larger than 3" diameter (75 mm).

4. Notify Engineer prior to removing trees larger than 2" (50 mm) diameter; and hedges and shrubbery.
5. Dispose of all items to an off-site location obtained by Contractor.

D. Use caution when placing and compacting backfill to avoid placing construction loads on pipe which may damage or displace newly laid pipe.

E. Remove, replace and repair fences, signs and other obstructions as necessary for construction; return all items to equal or better than original conditions.

F. Repair any drainage tile interrupted during the course of construction according to details on Drawings and/or Typical Detail Drawings.

G. Utility mains shown on Drawings, in conflict with new facilities: Perform relocation or make arrangements with utility to perform Work at no additional cost to Owner.

H. Utility mains not shown on Drawings, in conflict with new facilities: Notify Engineer immediately.

I. Excavate all material encountered to depth indicated on Drawings.

J. Schedule work to avoid property owner inconvenience insofar as practicable during construction.

K. Restore obstructions removed to accommodate construction equipment or to facilitate excavation.

L. Exercise care in operating equipment beneath or adjacent to trees to prevent damage.

M. Pile excavated material suitable for backfill in an orderly manner a sufficient distance from edge of excavation to avoid rollbacks, slides, or cave-ins. Stockpile topsoil.

N. Remove spoil not suitable for backfill; waste at disposal area obtained by the Contractor at no cost to the Owner.

O. Excavate in open cut the existing roads, utilities, and structures except as noted on Drawings.

P. Where new construction crosses or closely parallels existing utilities or utility services, excavate in advance of pipe laying to determine location and crossing arrangement, including exact construction line and grade.

Q. Excavations are Contractor’s responsibility and must comply with applicable local, state, and federal standards.

R. Contractor responsible for providing adequate barricades and protection around excavation and work areas.

S. Contractor responsible for providing and removing adequate temporary fencing for any fences that are disturbed by construction operations.

T. Maximum length of trench opening at any time: 300 feet (100 m).

U. Sections of the Work conducted in highway rights-of way: Strictly follow local permit requirements. Provide traffic control with signage, flagging, channeling devices, and barricades as required.

V. Temporary, unsupported cut slopes, in native soils with no seepage, shall not be excavated any steeper than 1.5H:1V. If exposed for long periods of time, cover with Visqueen to maintain stability and minimize erosion and continually monitor.

3.02 TRENCH EXCAVATION

A. Strip and stockpile topsoil for use in surface restoration.

B. Keep sides of trench as nearly vertical as practicable within the limits of excavation codes and safety requirements; maintain vertical walls of excavation below top of pipe. Provide trench wall support as needed.

C. Excavate to full depth by machine; level trench bottom to provide uniform bearing and support for full length of pipe.

D. Provide bell holes at each pipe joint; allow access completely around circumference of pipe for proper jointing operations.

E. Conform to common trench bottom construction practices as recommended by pipe manufacturer.

F. Trench bottoms carried below required grade; backfill to property elevation with crushed stone as specified for sewer pipe bedding at no expense to the Owner.

G. When unstable material is encountered, which may not provide a suitable foundation for pipe.
   1. Notify Engineer immediately.
   2. Engineer will investigate questionable material to determine its suitability for pipe foundation.
   3. If material is considered unsuitable for pipe foundations, Engineer will specify and authorize remedial measures in writing.
   4. If removal of unsuitable material is authorized:
      a. Replace with trench stabilizing material.
      b. Provide minimum of 4 inches (100 mm) of bedding material on top of stabilizing material to prevent point load. Bedding material graded sufficiently coarse to prevent movement and loss of bedding into trench stabilizing material.

H. Minimize the width of trench below the top of the pipe, but maintain trench width of no less than pipe O.D. plus 24".

I. When the material being excavated is such that it is physically impossible to stabilize the trench bottom or secure a uniform bearing using dewatering and a granular foundation and in the judgment of the Engineer concrete encasement, concrete cradling or pilings are necessary to support the pipe, provide such support when directed in writing by the Engineer.

J. Provide cradling or strengthening at Contractor's expense if above trench width is exceeded.

K. Concrete encasement, concrete cradling and pilings, if not shown on the Drawings or indicated in these specifications: paid for as extra work.

L. Excavate by hand:
   1. Under and around utilities.
   2. Where overhead clearance prevents use of machine.
   3. Under trees and shrubs where shown on Drawings.

3.03 ROCK EXCAVATION

A. Rock excavation: Rock requiring the use of pneumatic tools or explosives for removal.

B. When the material can be excavated by means other than pneumatic tools or explosives, such as a ripper, this excavation considered as earth excavation and, as such, no payment made for rock excavation.

C. When rock is encountered at locations generally indicated on the Drawings, excavate and haul all rock to an approved site obtained by the Contractor at no additional cost to the Owner. Where unanticipated rock is encountered, notify Engineer prior to removal.

D. Include the cost for anticipated rock excavation hauling and disposal in the unit price as shown on Form of Proposal. Negotiate the cost for removal of unanticipated rock prior to removal.

E. Excavate to provide pipe bedding cushion for pipeline structures and appurtenances in accordance with Typical Detail Drawings herein.

F. Remove and dispose of excavated rock not suitable for backfill; disposal is incidental to cost of rock excavation.

3.04 RUBBLE EXCAVATION

A. Removal: As specified for rock.

B. Remove and dispose of excavated rubble not suitable for backfill; disposal is incidental to cost of rubble excavation.

3.05 SHEETING, SHORING, AND BRACING

A. Construct sheeting, shoring, and bracing required to hold walls of excavation and to provide safety for workers, to protect existing utilities and structures, and to permit dry conditions for construction.

B. Sheeting: wood or steel.

C. Wood sheeting driven below level of pipe: leave in place to a level 5 ft. (2 m) below finish grade.

D. Pull steel sheeting except where shown on Drawings.

E. When movable trench shield is used below spring line of pipe, lift shield prior to any forward movement to avoid pipe displacement. Fill void left by removal of shield, between consolidated fill and stable trench wall, with consolidated fill of the same type as specified adjacent to the pipe.

F. Sheeting, shoring, and bracing: not paid for as a separate pay item, but considered incidental to the project.

G. Sheeting and shoring in accordance with OSHA and all other governmental regulations. Contractor solely responsible for complying with the regulations.

3.06 DEWATERING

A. Do all work in dry conditions; obtain the Engineer's approval of proposed methods of dewatering.

B. Provide for handling water encountered during construction.

C. Lay no pipe in, and place no concrete on, excessively wet soil.

D. If groundwater is encountered, provide sumps in the trench or some other methods for removal of water and stabilization of trench bottom.

E. Prevent surface water from flowing into excavation; remove water as it accumulates.

F. Divert stream flow and sewage away from areas of construction.

G. Do not pump water to existing sanitary sewers or onto adjacent property without approval of the Engineer and adjacent property owner.

H. Protect against settlement or damage to adjacent property.

I. Trench dewatering is incidental to the project.

3.07 BACKFILL FOR STRUCTURES

A. Backfill after concrete has cured for 5 days and has been reviewed and approved by Owner Site Representative.

B. Backfill with material removed from excavation except where granular backfill is specified; use no debris, frozen earth, large clods, stones, or other unsuitable material.

C. Backfill simultaneously on all sides of structures; protect structures from damage at all times.

D. Compact backfill at structures to density not less than specified for adjacent trench, or as shown on the Drawings.

E. Terminate backfill at finish grade as shown on Drawings; dispose of excess excavated material as directed by Engineer.

F. Prepare backfill for surface restoration as specified for adjacent trench.

G. Construct structures and appurtenances and perform backfilling as work progresses.

3.08 BEDDING AND BACKFILL FOR TRENCHES

A. Place bedding from bottom of pipe trench to pipe spring line as indicated on applicable Typical Detail Drawings contained herein. Bedding includes material below bottom of pipe as specified. Compact bedding below bottom of pipe prior to installation of pipe to minimize settlement. Bedding materials and degree of compaction as follows:

B. Bedding materials and degree of compaction as follows:
   1. Bedding for Gravity Lines: Granular pipe bedding material as specified in 2.01 A. Compacted in 6 inch (150 mm) lifts from trench bottom to pipe spring line to a minimum of 90% Standard Proctor Density (ASTM D 698). Thickness of bedding material below the bottom of pipe barrel of 1/8 pipe O.D., or 4 inch (100 mm) minimum.
   2. Bedding for Pressure Lines: Granular pipe bedding and backfill material as specified in 2.01 A. Where rock or other unyielding material is encountered in trench bottom, provide a cushion of granular pipe bedding with thickness as shown on Typical Detail Drawing herein. Bedding and cushioning materials compacted in 6 inch (150 mm) lifts from trench bottom to pipe spring line to a minimum of 90% Standard Proctor Density.

C. Backfill trench after locations of connections and appurtenances have been recorded. Conform to applicable Typical Detail Drawings contained herein.

D. Backfill with material removed from excavation except where imported backfill is specified; use no debris, frozen earth, large clods, stones, or other unsuitable material. If native material is too wet or dry to achieve specified compaction, Contractor required to dry or wet material or

replace with approved imported material at no additional cost to the Owner.

E. Backfill simultaneously on both sides of pipe to prevent displacement.

F. Place backfill into the trench at an angle to minimize impact on installed pipe is minimized.

G. Percent maximum density shall mean a soil density no less than the stated percent of optimum density for soil as determined by ASTM D 698, Standard Proctor Density or ASTM D 1557, Modified Proctor Density.

H. Rocks 1-1/2" (37 mm) in diameter and larger, wood, frozen earth, clods of earth and/or hard, bulky materials shall be considered as spoil materials and shall not be used as selected material for bedding, initial and trench backfill. Dispose of spoil material by hauling materials to a suitable disposal site obtained by the Contractor.

I. Place all initial backfill in such a manner so not to damage pipe. Compact to minimize settlement of trench backfill and provide optimum support of pipe.

J. Initial Backfill.
   1. High Density Polyethylene Pipe: Material and compaction as specified for trench backfill.

K. Place trench backfill only after initial backfill has been placed, compacted, and approved. Trench backfill, material and compaction requirements depend on what area the pipe is located beneath as specified. Trench backfill begins 1 foot (1/3 m) above pipe barrel and terminates at final grade or subgrade.

L. Trench Backfill.
   1. Grass Parking Areas and Unpaved Areas: Select material as previously defined. Compact backfill material to a minimum of 90% Standard Proctor Density (ASTM D 698).
   2. Paved Areas: Select material compacted in 6" (150 mm) lifts with pneumatic or mechanical tampers to finish grade or subgrade. Compact to a minimum of 95% Standard Proctor Density (ASTM D 698).

3.9 UTILITY CROSSINGS

A. Provide compacted sand or granular material under all existing utilities or service lines that are located above the new pipeline. Compact material to a minimum of 90% ASTM D 1557 Maximum Dry Density value, except in paved and structural areas, where material shall be compacted to at least 95% Maximum Dry Density value ASTM D 1557.

B. Notify utility companies before excavating; utilize local state One-Call system, if available, conform to current utility notification requirements.

C. Sections of the Work conducted in highway rights-of way: Strictly follow local permit requirements. Provide traffic control with signage, flagging, channeling devices, and barricades as required.

3.10 CLEANUP

A. Clean up each portion of construction as it is completed.

B. Remove unused stockpiled materials, rubbish, and debris and leave area in a clean and neat condition. Grade stockpile area to prevent standing surface water.

C. Leave site in a clean and neat condition. Grade to prevent standing surface water.

3.11 FIELD QUALITY CONTROL

A. Perform compaction density testing on compacted fill in accordance with ASTM D

END OF SECTION

SECTION 02315

EXCAVATION

PART 1 GENERAL

1.01 SECTION INCLUDES

A. Excavating for footings, foundation walls, slabs-on-grade, well chambers and underground piping and utilities.

1.02 PROJECT CONDITIONS

A. Verify that survey bench mark and intended elevations for the Work are as indicated.

1.03 CLASSIFICATION OF MATERIALS

A. See specification 02221 - Trenching, Backfilling and Compacting

1.04 SUBMITTALS

A. Excavation Plan: Prior to mobilization to the Site, submit a detailed Excavation Plan demonstrating compliance with specified requirements and to permit Owner Site Representative to schedule testing and measurement activities. Include written procedures, schedules, and drawings as applicable.

PART 2 PRODUCTS

NOT USED

PART 3 EXECUTION

3.01 PREPARATION

A. Identify required lines, levels, contours, and datum locations.

B. Locate, identify, and protect utilities that remain and protect from damage.

C. Notify utility company to remove and relocate utilities.

D. Use special care when excavating under and around existing facilities. Support existing facilities and earth under facilities to prevent settlement resulting from construction operations.

3.02 EXCAVATING - GENERAL

A. General excavation for buildings and structures shall be performed within building lines and sufficiently beyond to allow for proper construction, inspection and to provide ample room for erection and removal of formwork.

B. Excavate to depth indicated on the drawings and remove all loose soil. Where soft spots are encountered, remove all unstable material and replace with structural fill in sufficient depth to develop a firm foundation as directed by the Engineer.

C. The earth surface upon which foundations, footings and structures will be placed is to be mechanically compacted to 95% of the maximum dry density in accordance

with ASTM D-1557 for a depth of 12 inches.

D. Apply necessary moisture to the construction area and haul roads to prevent the spread of dust. Following excavation and grading on this project the Contractor shall be responsible for disposing of excess material from the project to a location designated by the Owner.

E. In the event any unsuitable bearing material is encountered at design depth, this condition shall be called to the attention of the Owner, or his representative, by the Contractor and a determination will be made prior to continuance. In the event over-excavation and special backfill are required, the Contractor shall proceed as instructed by the Engineer. If unsuitable bearing subgrade conditions were caused by the Contractor's operations at the site, then the cost of reestablishing suitable bearing conditions shall be at the expense of the Contractor and as directed by the Engineer. If unsuitable bearing conditions are a natural occurrence the extra cost shall be paid by the Owner.

F. Strip grass and vegetation from entire construction area and dispose of at landfill or location obtained by the Contractor.

G. Remove topsoil to minimum depth of eight inches (8") and stockpile for reuse to finish earth surfaces. In rural crop land areas, remove topsoil to a minimum depth of twelve inches (12") and stockpile for replacement on top of excavation.

H. Provide temporary drainage facilities to prevent damage when necessary to interrupt natural drainage or flow of artificial drains.

I. Use special care when excavating under and around existing facilities and structures. Prevent settlement of existing structures which may result from construction operation.

J. Underpin adjacent structures which may be damaged by excavating work.

K. Excavate to accommodate new structures and construction operations.

L. Notify Engineer of unexpected subsurface conditions and discontinue affected Work in area until notified to resume work.

M. Do not interfere with 45 degree bearing splay of foundations.

N. Hand trim excavations. Remove loose matter.

O. Remove lumped subsoil, boulders, and rock up to 1/3 cu yd measured by volume.

P. Grade top perimeter of excavation to prevent surface water from draining into excavation.

Q. Remove excavated material that is unsuitable for re-use from site.

R. Stockpile excavated material to be re-used in area designated on site.

3.03 EXCAVATION - SUBSOIL

A. Excavate subsoil from areas to be further excavated or re-graded.

B. Stockpile in area designated on site. Remove excess subsoil not being reused from site.

C. Do not excavate wet subsoil.

D. Stockpile subsoil to depth not exceeding 8 feet.

3.04 EXCAVATION FOR APPURTENANCES

A. Excavate as required for appurtenances.

B. Carry excavation to firm, undisturbed soil.

END OF SECTION

SECTION 02521

DRILLING AND WELL/PIEZOMETER INSTALLATIONS

PART 1 GENERAL

1.1 SECTION INCLUDES

A. Drilling and installing 14 overburden extraction wells.

B. Drilling and installing one bedrock extraction well.

C. Drilling and installing seven overburden monitoring wells.

D. Drilling and installing two bedrock monitoring wells.

E. Drilling and installing 14 overburden piezometers.

F. Drilling and installing eight overburden vacuum monitoring probes.

G. Development of the installed extraction wells, monitoring wells and piezometers to a sand-free condition.

1.2 REFERENCES

A. American Society for Testing and Materials (ASTM):

1. A53/A53M - Standard Specification for Pipe, Steel, Black and Hot-Dipped, Zinc-Coated, Welded and Seamless.
2. A312/A312M - Standard Specification for Seamless and Welded Austenitic Stainless Steel Pipes.
3. C-150 – Standard Specification for Portland Cement.
4. D-1785 – Standard Specification for Polyvinyl Chloride (PVC) Plastic Pipe, Schedules 40, 80 and 120.
5. D-5092 – Standard Practice for Design and Installation of Groundwater Monitoring Wells in Aquifers.

B. American Water Works Association (AWWA):

1. A100 - Water Wells.
2. C900 - Polyvinyl Chloride (PVC) Pressure Pipe, 4 Inch through 12 Inch, for Water Distribution.

1.3 DESCRIPTION OF WORK

A. Overburden Extraction wells with the following characteristics:

1. Borehole: 10 or 12-inch diameter.
2. Casing: 6-inch diameter Schedule 80 PVC,
3. Sand pack and screen slot: to be determined from grain size analysis.
4. Screen length: 2.5 to 5 feet.
5. Total Depth: ranging from 54 to 69 –feet below grade.

B. Bedrock Extraction well with the following characteristics:

1. Borehole: 10-inch diameter overburden and nominal 6-inch diameter bedrock.
2. Surface Casing: 6-inch diameter low carbon steel,

3. Adaptor: 6-inch to 4-inch K-Packer

2. Casing: 4-inch diameter Schedule 80 PVC,

3. Screen: 0.020-inch slot, 35-feet long.

4. Total Depth: 116 –feet below grade.

C. Overburden monitoring wells with the following characteristics:

1. Borehole: 6-inch diameter.
2. Casing: 2-inch diameter Schedule 40 PVC,
3. Screen: 0.010-inch slots, 10-feet long.
4. Sand pack and screen: to be determined from grain size analysis.
5. Total Depth: ranging from 15 to 65 –feet below grade.

D. Bedrock monitoring wells with the following characteristics:

1. Borehole: 10-inch diameter overburden and nominal 6-inch diameter bedrock.

2. Surface Casing: 6-inch diameter low carbon steel,

2. Well Casing: 2-inch diameter Schedule 80 PVC,

3. Screen: 0.010-inch slots, 10-feet long.

4. Total Depth: 100 –feet below grade.

E. Overburden piezometers with the following characteristics:

1. Borehole: 4-inch diameter.
2. Casing: 1-inch diameter Schedule 40 PVC,
3. Screen: 0.010-inch slots, pre-packed, and 5-feet long.
4. Total Depth: ranging from 15 to 70 –feet below grade.

F. Vacuum monitoring probes with the following characteristics:

1. Borehole: 3 to 4-inch diameter.
2. Casing: 0.75-inch diameter Schedule 40 PVC,
3. Screen: 0.010-inch slots pre-packed 3-feet long.
4. Total Depth: 7 to 15 –feet below grade.

1.4 PROGRESS SUBMITTALS

A. Product Data: Include for drilling fluids, well casing, well screens, riser, silica sand, bentonite grout, cement-bentonite grout, bentonite powder, and concrete.

B. Materials: Provide Material Safety Data Sheets as appropriate for any materials brought to Site.

C. Samples: Should the source of drilling fluids or other materials to be used downhole change, submit a sample of new material for analyses; such submissions shall be in addition to any submission required to be submitted to other authorities having jurisdiction.

D. Evidence of Qualifications: Submit proof of license by State of Indian to perform this work if required.

E. Evidence of OSHA Training: Submit proof of 40-hour OSHA training and current refresher training for all employees that will be on-site performing subsurface work.

1.5 CLOSEOUT SUBMITTALS

A. Record Documents: Accurately record actual locations, depth, subsoil strata, and drilling difficulties encountered. Submit a signed copy of driller's log book statements.

1.6 QUALITY ASSURANCE

A. Because of the nature of activities which have taken place at the Site, the locations may penetrate potentially contaminated soil/bedrock. Take necessary precautionary measures to prevent contamination near the ground surface from being carried downhole. When drilling through fine-grained overburden into an underlying aquifer, prevent potential overburden contamination from passing into the isolated aquifers.

B. Procure permits, certificates, and licenses required by law for the execution of the Works. Request and obtain waivers from authorities having jurisdiction and submit to ENGINEER prior to commencement of work at the Site. Comply with federal, state, local laws, ordinances or rules, and regulations relating to the performance of the Work.

1.7 QUALIFICATIONS

A. Company specializing in performing the work of this Section with a driller/contractor licensed in the State of Indiana and employed by CONTRACTOR, and having a minimum of 5 years documented experience.

1.8 REGULATORY REQUIREMENTS

A. Well installations and removals shall be conducted in accordance with Indiana Administrative Code 312 IAC Article 12.

1.9 ENVIRONMENTAL REQUIREMENTS

A. Shut off and seal a hole should flowing artesian water or gas be encountered.

B. Take necessary precautions to ensure subsurface soils and water which could impact the integrity of the Site are not released.

C. Remediate any release of potentially contaminated material and restore the area to pre-construction conditions using clean imported materials.

D. Ensure that drilling methods do not impair production from aquifers encountered.

1.10 SEQUENCING AND SCHEDULING

A. Sequence and schedule the work subject to the following conditions:

1. Complete drilling and installation activities at each location in its entirety, except where surface casing is to set for a minimum of 48 hours, before moving to a subsequent well.
2. Clean and develop wells and sumps after completion, following a minimum 24-hour period.

PART 2 PRODUCTS

2.1 PROTECTIVE SURFACE CASING AND CAP

A. ASTM A53 Schedule 40, carbon steel, 6-inch ID. Surface casing and a lockable cap welded to hinge with the base welded directly to the casing.

B. ASTM A53, Lockable Cap of same materials as surface casing.

2.2 RISER

A. Schedule 80 PVC as shown on the Drawings.

B. Schedule 40 PVC as shown on the Drawings..

2.3 SCREEN

A. Schedule 40 PVC; screen length and slot size shown on the Drawings or determined from grain-size analysis.

2.4 SILICA SAND

A. ASTM D5092.

B. Inert uniformly graded (20 to 40 mesh), well rounded and free of fines or determined from formation grain-size analysis.

C. Gradation: Containing no more than 10 percent of sand grains finer than screen slot size.

2.5 CEMENT

A. ASTM C150 Type I, Portland cement.

B. Do not use quick setting cement containing additives.

2.6 BENTONITE GROUT

A. Mixture of Volclay or Benseal; ratio of 2.1 pounds of bentonite with 1 U.S. gallon of water to yield a minimum density of 9.4 pounds per U.S. gallon.

2.7 CEMENT-BENTONITE GROUT

A. Mixture of 6.5 U.S. gallons of water per 94-pound bag of normal Portland cement.

B. Add approximately 4 pounds of bentonite powder per bag of cement to the slurry.

C. Quantity of Bentonite: Not exceeding 5 percent by weight of the mixed slurry, to avoid excessive shrinkage of grout.

2.8 CONCRETE

A. ASTM C39.

B. Pre-mix concrete mixed to manufacturer's specifications with potable water.

C. Compressive Strength: Minimum 3,000 psi at 28 days.

2.9 BENTONITE PELLET SEAL

A. Size: 3/8 inch diameter.

B. Type: As approved by ENGINEER.

2.10 BENTONITE CHIPS

A. Chipped sodium montmorillonite furnished in sacks or buckets, free of impurities, from a commercial source.

B. Diameter: Less than 1/5 of the width of the annular space into which they are placed.

2.11 DRILLING FLUID

A. Mixture of potable water and bentonite of a source and mix ratio approved by ENGINEER.

2.12 POLYETHYLENE SHEETING

A. Continuous sheeting of minimum 20-mil thickness fabricated from a single ply of construction grade high-density polyethylene plastic in VER trenches.

2.13 WATER

A. When used in equipment decontamination, drilling, and monitoring well construction including cleaning, grouting, or other activities shall be clean, potable water obtained from a source supplied by CONTRACTOR.

2.14 DRUMS

A. DOT-approved, 55-gallon steel drums complete with lids and required labels for describing contents.

PART 3 EXECUTION

3.1 EXAMINATION

A. Verify that the Site conditions will support equipment for performing drilling operations.

B. Do not commence drilling operations until ENGINEER has located and marked the location of each well; proceed with installation of well only upon receipt of written instructions from ENGINEER.

C. Obtain ENGINEER's approval for any material introduced into borehole.

D. Obtain clearance of existing underground utilities and provide documentation to ENGINEER.

3.2 PREPARATION

A. Protect structures near well from damage.

B. Equipment Cleaning:

1. Upon mobilization to the Site and prior to commencing drilling, take drill rig and associated equipment to the designated on-Site Equipment Decontamination Facility and thoroughly clean with a high-pressure, low-volume, hot water wash to remove mud and other foreign matter; ensure drill rig and associated equipment are free of mud and hydraulic fluid, seals and gaskets are intact, and no fluids are leaking. Remove loose paint or encrustation from downhole equipment prior to use; remove by sandblasting prior to mobilization to the Site.
2. Take downhole equipment used in the completion of soil borings and installation of wells to the Equipment Decontamination Facility and clean as specified herein prior to commencing each borehole to prevent cross-contamination from the previous drilling location.

3. Clean drill rig prior to mobilizing to each boring location if determined to be necessary by ENGINEER.
4. Clean screens and casings prior to installation as specified herein if not pre-clean by the manufactures and in sealed plastic wrap.

C. Methods of Cleaning:

1. Clean downhole drilling equipment such as augers, cutting bits, drill steel, and associated equipment and tools that will contact potentially contaminated soil or groundwater with clean, hot water under high pressure using the following wash sequence:

    1. Clean, hot water, high-pressure wash and wipe.
    2. Clean, hot water, high-pressure rinse.

2. Clean well screens and well casings thoroughly using the following wash sequence if not packaged in plastic from the manufacture:

    1. Sand off printing inks, if present, on the surface of casing or screen.
    2. Wash equipment thoroughly with a detergent (Alconox) high-pressure wash to remove particulate matter or surface film (if any).
    3. Rinse with distilled water.

3. Transfer washwater generated from cleaning of drilling equipment and well screens and casings to wastewater storage tank or drums.

4. Clean sampling equipment and tools thoroughly, including split spoons or other equipment used for collecting soil samples during construction of wells, using the following wash sequence:

    1. Clean with tap water and detergent (Alconox) using a brush if necessary to remove particulate matter and surface films.
    2. Rinse thoroughly with potable water.

5. Transfer wash water, rinse water, and fluids to wastewater storage tank or drums.

6. Obtain ENGINEER's approval of cleaned drilling equipment and sampling equipment and tools prior to their use.

7. Disposal of Decontamination Wash Waters and Sediments: Collect and transfer decontamination wash waters to wastewater storage tank; collect and transfer sediments to drums; disposal of decontamination wash waters and sediments shall be the responsibility of Client.

3.3 DRILLING AND INSTALLATION

A. Install extraction wells, monitoring wells, piezometers and vacuum monitoring probes using appropriate rotary sonic drilling method or direct push technology (DPT), as approved by ENGINEER.

B. Construct each extraction wells, monitoring wells, piezometers and vacuum monitoring probes in accordance with the details shown on the drawings and in locations designated by ENGINEER.

C. Maintain extraction wells, monitoring wells, piezometers and vacuum monitoring probes opening and casing free of contaminating materials.

D. Advance borehole using equipment to ensure a minimum borehole diameter borehole as shown on the drawings. Advance borehole to elevation shown on the drawings.

E. Place an inert silica sandpack around and a minimum 2 feet above the well screen. Install sandpack in one continuous operation from the bottom to the top of the desired interval to prevent bridging, formation of voids, or segregation. If bridging of the sandpack occurs, mechanically break the bridged material prior to proceeding with the addition of more sandpack.

F. Install a bentonite seal a minimum of 2 vertical feet above the sandpack using a 1-inch diameter decontaminated tremie pipe. Install the bentonite pellet seal in one continuous operation from the top of sandpack to prevent bridging, formation of voids, or segregation. Add sufficient potable water as necessary to ensure proper hydration of the bentonite pellet seal.

G. Allow sufficient time for the bentonite seal to hydrate and expand prior to grouting the remaining annulus. Except as specified otherwise, allow bentonite to hydrate a minimum of 2 hours. Alternatively and subject to ENGINEER's approval, a shorter hydration time may be used if field testing of bentonite pellets with groundwater collected from existing wells indicates that a shorter period is sufficient for hydration.

H. Fill the remainder of the borehole annulus with cement-bentonite grout by the tremie method or other method approved by ENGINEER to within 3 or 4 feet of ground surface. Place cement-bentonite grout in one continuous operation with the entire amount placed before initial set occurs.

I. Allow minimum 48 hours for cement-bentonite grout to set.

J. Develop each completed extraction well, monitoring well, and piezometers to a sand free condition utilizing surging and pumping methods.

3.4 INSTALLATION METHODS

A. Overburden Piezometers

1. Advance 14 nominal four-inch diameter soil borings to the top of bedrock (est. @ 60 feet below grade) at the proposed overburden extraction well locations.
2. Blind drill to a depth of 45 feet.
3. Collect a formation sample within the five foot interval directly above bedrock.
4. Submit the formation sample for grain-size analysis to determine the appropriate extraction well screen slot size.
5. Complete five of the 14 soil borings by installing a 1-inch diameter PVC piezometer with a five foot pre-pack screen.
6. Advance nine additional nominal four-inch diameter soil borings to the top of bedrock (est. @ 60 feet below grade).
7. Blind drill to the top of bedrock.
8. Complete each of these additional nine soil borings by installing a 1-inch diameter PVC piezometer with a five foot pre-pack screen.
9. Install a hydrated bentonite seal above the piezometer screen.
10. Install a four inch diameter protective casing over each piezometer and a concrete pad.

B. Overburden Extraction Wells

1. Advance fourteen nominal 10 to 12-inch diameter borehole approximately 4.5 feet into the bedrock (estimated depths as per the drawings)

2. Install six-inch diameter schedule 80 PVC overburden extraction wells assuming the construction details outlined on the drawings.
3. Screen slot sizes and sand pack to be determined from grain-size analysis.
4. Each well will have a four foot sump at the base.
5. Place an inert silica sand-pack around and a minimum 2 feet above the well screen.
6. Install a bentonite seal a minimum of 2 vertical feet above the sand-pack using a 1-inch diameter decontaminated tremie pipe.
7. Fill the remainder of the borehole annulus with cement-bentonite grout by the tremie method.
8. No protective casing and no grout within 5 feet of grade.

C. Bedrock Extraction Well

1. Advance a nominal 10-inch diameter borehole a minimum of 2.0 feet into the bedrock (estimated depths as per the drawings)
2. Install a 6-inch diameter low carbon steel surface casing in the borehole and grout in place using a cement bentonite grout via tremie pipe methods.
3. Allow the grout to set for at least 48-hours
4. Advance a nominal 6-inch diameter borehole inside the surface casing to a depth of 116 feet below grade.
5. Install a 6 x 4 K-packer the borehole attached a 15 foot section of schedule 80 PVC casing and a 35-foot section of 20 slot screen.
6. Casing and screen are to be 4-inch in diameter.

D. Bedrock Monitoring Wells and Piezometers

1. Advance three nominal 10-inch diameter borehole a minimum of 2.0 feet into the bedrock (estimated depths as per the drawings)
2. Install a 6-inch diameter low carbon steel surface casing in the borehole and grout in place using a cement bentonite grout via tremie pipe methods.
3. Allow the grout to set for at least 48-hours
4. Advance a nominal 6-inch diameter borehole inside the surface casing to a depth of approximately 100 feet below grade.
5. Install 2-inch diameter PVC riser attached to a 10-foot section of ten slot PVC screen.
6. Place an inert silica sand-pack around and a minimum 2 feet above the well screen.
7. Install a bentonite seal a minimum of 2 vertical feet above the sand-pack using a 1-inch diameter decontaminated tremie pipe.
8. Fill the remainder of the borehole annulus with cement-bentonite grout by the tremie method.
9. Install a six-inch diameter protective casing over each monitoring well or piezometer and install a concrete pad.

E. Vacuum Monitoring Probes

1. Advance eight nominal 3 to 4-inch diameter soil borings depths ranging from 7 to 15 feet below grade utilizing direct push drilling methods.
2. Install a one-inch diameter PVC piezometer with a three foot pre-pack screen.
3. Install a hydrated bentonite seal above the probe screen.
4. Install an eight-inch diameter flush road way boxes over each probe and install a concrete pad.

3.5 WASTE HANDLING

A. Collect cuttings and solid waste generated during well construction; place in drums.

B. Collect liquid wastes generated during well construction, development and transfer to wastewater storage tank or drums.

3.6 WELL ABANDONMENT

A. In the event of well abandonment because of loss of tools or equipment, or due to CONTRACTOR negligence, if requested and as directed by ENGINEER, fill the abandoned hole with cement-bentonite grout as directed by ENGINEER, salvage and remove such casing as can be salvaged.

3.7 TOLERANCES

A. Maximum Variation from Plumb: Not to exceed 2/3 of smallest inside diameter of the casing per 100 feet of well depth.

B. Maximum Offset from True Position: 1 inch.

C. Test alignment by lowering a section of pipe, as appropriate for holes less than 40 feet deep into the boring. The section of pipe shall have an outside diameter not more than 0.5 inches smaller than the diameter of that part of the casing or well to be tested. The section of pipe shall move freely throughout the tested interval.

D. Test plumbness and alignment in the presence of ENGINEER.

E. Correct deficiencies in plumbness and alignment.

3.8 DEVELOPMENT

A. Develop extraction wells, monitoring wells, and piezometers after completion.

B. Provide ENGINEER with proposed well development method and receive approval prior to commencing well development.

C. Contain solids and liquids generated during well development as directed by ENGINEER.

3.9 PROTECTION OF FINISHED WORK

A. Protect completed wells and wells under construction from contamination.

B. Install lockable 2-inch diameter steel cap and lock at monitoring wells and points.

PART 4 MEASUREMENT AND PAYMENT

4.1 GENERAL

A. Section 01200 - Price and Payment Procedures: Requirements for measurement and payment.

B. Payment Basis: Payment under this Section forms the Lump Sum Price associated with Schedule of Prices - Item 13 (Monitoring Network).

END OF SECTION

SECTION 03300

CAST IN PLACE CONCRETE

PART 1 GENERAL

1.01 SECTION INCLUDES

A. This specification covers the technical requirements for furnishing, delivery, forming, placing, finishing, and curing of plain and reinforced concrete, including the fabrication and placement of reinforcing steel, and the installation of embedded items whether furnished under this specification or not, in accordance with the drawings and as specified herein.

1.02 STANDARDS AND CODES

A. The work covered by this specification shall conform to Building Code Requirements for Reinforced Concrete (ACI 318). Specifications for Structural Concrete for Buildings (ACI 301), and other referenced and related codes and standards as designated herein.

B. All specifications, standards, codes, etc., referred to are the latest edition, and together with all addenda, revisions, and supplements shall be considered part of this specification.

1.03 SUBMITTALS

A. Concrete Mix Data and Test Reports

1. Prior to any concrete placement, the Contractor shall provide the Owner with four (4) copies of the concrete mix data and test reports (trial mix data and/or field strength test) for approval. In addition, laboratory test results on the aggregate and cement shall be submitted with the mix design data. Manufacturer's literature shall also be submitted on all admixtures to be used in the concrete.

B. Working drawings - Erection drawings of reinforcing, showing dimensions, bar schedules, and details shall conform to ACI-315. Submit four (4) copies each for review and approval by Owner.

PART 2 PRODUCTS

2.01 MATERIALS

A. Portland Cement

1. Portland cement shall conform to the “Standard Specifications for Portland Cement,” ASTM C150. Type IA or Type IIA cement with air-entraining agent shall be used in all concrete except where specifically called for on the drawings.

2. Aggregates – Igneous Type

a. All aggregates, unless otherwise specified, shall conform to the Standard Specifications for Concrete Aggregate, ASTM C33. Fine aggregate shall consist of clean, washed, natural or crushed sand of uniform gradation. Coarse aggregate shall consist of washed gravel or washed crushed rock having hard, strong, durable pieces free from adherent coatings or other weak, deleterious substances.
b. Maximum size aggregate shall conform to ACI-31 8. In general, 1-1/2” maximum aggregate shall be utilized unless rebar spacing prohibits.

B. Water

1. Water for mixing concrete shall be clean and free from injurious amounts of oil, acid, alkali, organic matter, sulfates, or other substances that can adversely affect concrete strength, durability and/or chemical resistance.

C. Admixtures

1. Chemical admixtures shall be used in concrete to improve its characteristics in one or more respects, including economy, strength, durability, workability, water-tightness, drying shrinkage behavior and increased resistance to damage from cyclic freezing and thawing.

2. The selection of the admixture(s) to be used in the mix shall be based on an appropriate evaluation of its effects which shows it to be desirable for use in the particular concrete under the conditions of the use intended. The admixtures to be used shall be subject to the approval of the Engineer. Unless otherwise specified, use shall be limited to the types generally recognized as water-reducing, set-controlling, air-entraining, or combinations of these functional types.

3. Water-reducing admixtures shall conform to ASTM C94, Chemical Admixtures for Concrete, potable. High-range water reducers (super plasticizers) may be utilized.

4. Concrete shall contain an air-entraining admixture conforming to ASTM C260.

5. No other admixtures will be permitted. In particular, Calcium Chloride based compounds are specifically prohibited.

6. Contractor and contractor’s supplier are also responsible to correct for any and all synergistic effects caused by intermixing of two or more different brands of additives.

D Reinforcement

1. Metal reinforcement shall conform to the requirements of the “Standard Specifications for Billet-Steel Bars for Concrete Reinforcement”, ASTM A615, Grade 60, unless otherwise specified. All reinforcing steel shall be epoxy coated per ASTM A934.

E. Expansion Joint Filler

1. Premolded, non-extruding type, ASTM D 1751.

F. Expansion Joint Sealer

1. One component polyurethane "Sikaflex-1A" by Sika Chemical Corporation, or an approved equal.

G. Water Stops

1. Water stops shall be serrated polyvinyl chloride with center bulb similar and equal to Cat. No. RB4-316 by Vinylex Corporation, or approved equal. Size to be as indicated on drawings. All joints and splices shall be one hundred percent (100%) fused.

H. Anchor Bolts

1. Carbon steel, ASTM F 1554, with heavy hex head nuts. Bolts, nuts, and washers shall be galvanized, ASTM A 123, unless indicated otherwise on drawings.

I. Miscellaneous Embedded Steel

1. Carbon Steel, ASTM A 36.

J. Wood Sleepers

1. No. 2 Dimension Douglas Fir or West Coast Hemlock pressure treated against fire and decay using "Non-Com" by Koppers Co., Inc. or approved equal.

PART 3 EXECUTION

3.01 STORAGE OF MATERIALS

A. Cement and aggregates shall be stored in such a manner as to prevent deterioration or intrusion of foreign matter. Liquid admixtures shall be protected from freezing and from settling out of solution. Any deteriorated or damaged materials shall not be used for concrete.

PART 4 CONCRETE QUALITY

A. Concrete Strength

1. All concrete for this specification shall have a minimum 28 day compressive strength of 4,000 psi.

B. Slump

1. Slump of concrete shall be three and a half inches (3-1/2”) plus or minus one (1) inch.

2. Slump shall be measured at the discharge of the concrete mixer truck and prior to pumping.

C. Air Content

1. All concrete under this specification shall be air entrained to produce 4% air by volume. Concrete within air content greater than 6.5% will be rejected.

PART 5 CONCRETE PROPORTIONS AND CONSISTENCY

A. Concrete shall be proportioned by Method 1 or 2 of ACI 301.

B. Proportions of cement, aggregate and water for concrete shall produce the specified minimum compressive strength of 28 days. Cement quantity shall be the minimum required to achieve the specified strength. The mixture shall work readily into corners and angles of forms and around reinforcement with the method of placing employed but without permitting segregation of material or collection of free water on the surface. Water/cement ratio shall be .45 (max).

C. Slump tests shall be in accordance with ASTM C143. Tests shall be made by the Owner except when indicated otherwise in the project specifications.

D. All concrete for this specification shall contain entrained air.

E. All water shall be added at the batch plant. Water may not be added at the construction site unless approved by the Engineer.

PART 6 FORM WORK

A. Formwork shall conform to ACI 318 and ACI 347.

B. Wood forms for exposed surfaces of concrete shall be of plywood or other dressed wood material and shall be free from knots, warps, breaks, or other defects likely to cause irregular surfaces.

C. Metal forms shall be free from irregularities, dents and sags.

D. Form ties shall be snap-off type with ends terminating 1" below finished concrete surface. Water seal coil type shall be used in walls of water-bearing structures.

E. The contractor shall be responsible for design of formwork, safe practice in removing forms and shoring, and placing adequate reshores.

F. Chamfer Strips - A ¾" chamfer shall be provided at all exposed edges of concrete except the top horizontal edges of pump pads, curbs and piers shall be edge tooled.

G. An approved release agent shall be applied to all forms to facilitate form removal.

PART 7 REINFORCEMENT AND EMBEDMENTS

A. Fabrication and placement of reinforcing steel shall conform to ACI 318.

B. Unless otherwise indicated on the drawings, minimum concrete protection for reinforcement shall conform to ACI 31 8.

C. Water Stops

1. Install in all construction joints where indicated.

2. Install conforming to manufacturer's printed instructions. Take special precautions to avoid bending or displacing water stop while placing concrete around it.

D. The Contractor shall notify the Owner when reinforcement and other inserts are set and ready for inspection.

PART 8 JOINT SYSTEMS

A. Expansion Joints to be located where indicated and provide full isolation between materials.

B. Control joints shall be as indicated on the drawings. Joints shall be sawed as soon as the concrete surface is firm enough not to be torn or damaged by the blade.

C. Construction Joints

1. No construction joints shall be made in slabs, mats, walls, beams, trenches or footings unless shown on the drawings or approved in writing by the Owner.

2. Obtain Owner's approval of joints located by Contractor prior to preparation of reinforcing steel drawings. Locate joints not indicated or specified to least impair the strength of the structure.

PART 9 MIXING AND PLACING CONCRETE

Conform with ACI 301 and as specified herein.

9.1 Mixing

1. Ready-mixed concrete shall be mixed and delivered in accordance with specifications for Ready-Mixed Concrete (ASTM C 94).

2. For job-mixed concrete, the mixer shall be rotated at a speed recommended by the manufacturer. Each batch of 1 cubic yard or less shall be mixed for at least one (1) minute after all materials are in the mixer. The mixing time shall be increased fifteen (15) seconds for each cubic yard or fraction thereof. The entire batch shall be discharged before the mixer is recharged.

9.2 Conveying

1. Concrete shall be conveyed from the mixer to the place of final deposit by methods that will prevent segregation or loss of materials.

2. Equipment for chuting, pumping, and pneumatically conveying concrete shall be of such size and design as to ensure a practically continuous flow of concrete at the delivery end without segregation of materials.

9.3 Placing of Concrete

1. Concrete shall be deposited as nearly as practical in its final position to avoid segregation due to rehandling or flowing. The placing of concrete shall be carried on at such a rate that concrete is at all times plastic and flows readily into the spaces between the bars.

2. When placing is started, it shall be carried on as a continuous operation until placement of the panel or section is completed.

3. Place concrete on properly prepared and unfrozen subgrade and only in dewatered excavation and forms.

4. Use forms for all concrete except where otherwise indicated or specified.

5. Do not use concrete that has partially hardened or has been contaminated by foreign materials.

6. Prevent mud or foreign materials from entering the concrete or forms during placement operations.

9.4 Depositing

1. Place concrete in continuous horizontal lifts not to exceed 18” and place concrete against bulkheads and keyways at vertical joints.

2. Maximum free drop of concrete shall be 5 feet in walls 10 or less in thickness with 1 foot additional drop allowed for each 1” of wall thickness over 10”, with a maximum drop of 10 feet.

3. When moisture barrier is used, keep lapped joints closed and take precautions to

avoid puncturing the barrier.

9.5 Consolidation of Concrete

1. Consolidate concrete as recommended by the Report of ACI Committee 609. Characteristics and application of concrete vibrators shall be as set forth in Table I of the Report.

2. Provide an adequate number of vibrators of sufficient capacity to keep up with the maximum rate of concrete placement. Keep on hand adequate standby equipment in serviceable condition.

3. Vibrate concrete only until the concrete is thoroughly consolidated and the voids filled as evidenced by the leveled appearance of the concrete at the exposed surface and the embedment of the surface aggregate.

4. Insert internal vibrators vertically to the full depth of the layer being placed and into the previous layer where not hardened. Do not drag vibrators through the concrete. Insert and withdraw slowly with the vibrator running continuously so that no hole will be left in the concrete. Avoid flow of concrete from one location to another by use of a vibrator.

5. Consolidate concrete layer to full depth when using a surface vibrator. Use thinner layers or more powerful vibrator if necessary to achieve complete consolidation.

6. Use form vibrators only where sections are too thin or where sections are inaccessible for internal vibrators.

9.6 Protection

1. Unless adequate protection is provided and acceptance is obtained, concrete shall not be placed during rain, sleet or snow.

2. Spray Confilm, as manufactured by Master Builders, over the surface of the concrete immediately after screeding and or bull floating to reduce rapid evaporation of the free water. Apply per manufacturer's written instructions.

9.7 Hot-Weather Concreting

1. Conform to ACI 305 when temperature is 90°F or above, or is likely to rise above 90°F within the 72 hour period after placing.

2. Concrete shall have an in-place temperature of 85°F or lower.

3. Cool concrete by shading and water fogging for a minimum period of 24 hours, starting immediately after placing.

9.8 Cold-Weather Concreting

1. Conform with ACI 306 when temperature is below 40°F or is likely to fall below 40°F during the 72 hour period after placing.

2. Do not expose fresh concrete to carbon monoxide or carbon dioxide fumes from heaters or engines. Concrete with carbonation shall be repaired or replaced at

the contractor's s expense.

3. Place concrete at temperatures recommended in Table 1 of ACI 306.

9.9 Time Requirements

1. Place concrete at a sufficient rate to assure that lifts below have not taken initial set before concrete is deposited. Settlement shrinkage shall have occurred prior to placing subsequent lifts.

2. Place concrete within forty five (45) minutes after mixing, except that this period may be extended to ninety (90) minutes (maximum) if weather conditions are favorable, concrete temperatures have not exceeded specified limits, significant slump loss has not occurred, and the Owner concurs.

PART 10 FINISHES

10.1 General

1. Remove fins and burrs and patch voids on irregularities in all exposed vertical surfaces.

2. Tie holes shall be patched by applying water to saturate the concrete, apply mortar with hammer and ramming rod flush with surface, and rub to finish.

10.2 Slabs

1. Finishing of concrete floors and slabs shall be in accordance with ACI 302. In general, surface of slabs shall be brought to proper level by screeding followed immediately with a wooden bull float. Bull float shall be used only to level the surface, not to close the surface. Bull floating must be completed before any excess water or bleeding water is present at the surface.

   A slight stiffening of concrete with no bleed water present is necessary before proceeding further. When the concrete will bear the weight of a man with a maximum 1/4" indentation, the concrete shall be floated by hand or by a trowel machine outfitted with float shoes. Finish surface with one pass of a flat steel trowel followed by a light broom finish in the direction of the slope of the slab.

2. Screed level and wood float surface of all equipment pads.

PART 11 CURING AND PROTECTION

11.1 Curing of Concrete

Cure all concrete by the following methods, unless approved otherwise by the Engineer. Curing method shall begin as soon as the surface of the concrete will not be marred by its operation.

1. Leaving in forms for a minimum of seven (7) days. Keep formwork wet to prevent drying of concrete surfaces. Exposed surfaces shall be kept continuously wet.

2. Newly placed concrete shall be kept wet by the continuous application of water with a nozzle, soakers, or wet burlap for the first seven (7) days after the concrete has been placed. Alternatively, use polyethylene sheets applied in full contact with

surfaces, and maintain the concrete surfaces wet in an approved manner for a minimum of seven (7) days. This curing water shall be clean and free of contaminating substances that would discolor the concrete.

Upon approval of the Civil Engineer, the concrete may be dewatered after three (3) days and a membrane curing compound, conforming to ASTM C 309, applied before the concrete surface is dry. The curing compound shall have a fugitive dye and shall be applied according to the manufacturer's written instructions.

3. The curing methods recommended in ACI 305 and ACI 306 shall be followed for concrete placed during hot or cold weather, except that a membrane curing compound shall not be used for hot weather concrete.

PART 12 CONCRETE TEST AND INSPECTION

12.1 General

1. The Contractor shall employ and pay for services of the independent testing laboratory for tests required to show compliance with the specifications. Test results shall be submitted directly to the Owner Site Representative. Selection of the testing laboratory is subject to approval of the Owner Site Representative.

2. Tests required by the Contractor or his supplier which are necessary to check conformity to the specifications are the responsibility of the Contractor and/or his suppliers.

3. Materials and operations shall be tested and inspected as work progresses. Failure to detect defective work shall not prevent nor inhibit rejection when defect is discovered, nor shall it obligate the Owner for final acceptance.

4. Testing agencies shall meet the requirements of "Recommended Practice for Inspection and Testing Agencies for Concrete and Steel in Construction ASTM E-329-77.

12.2 Tests

1. Fresh concrete will be sampled from each concrete supplier on a daily basis. One strength test, consisting of five (5) test cylinders shall be made from each 50 cubic yards of concrete, or where a days pour does not amount to 50 cubic yards. One cylinder of each set will be broken at the age of seven (7) days, one cylinder at fourteen (14) days, two at twenty eight (28) days and one at forty five (45) days. Samples from which compression test specimens are molded shall be secured in accordance with ASTM C 172.

2. For each strength sample made, slump, air content, fresh-unit weight and concrete temperature will be tested from the same concrete truck. In addition, temperature, air content and slump will be tested regularly to ensure conformance with the specification.

3. Compression test specimens shall be made in accordance with ASTM C 31. Specimens taken to the laboratory for curing will be cured in accordance with ASTM C192. Specimens will be tested in accordance with ASTM C 39.

4. If the average strength of the 28 day test cylinders fall below the required strength, further test samples (taken by the Contractor) may be required by the Owner

before the structure will be accepted.

5. Core drilling and testing, if required, will be performed by the Owner in accordance with ASTM C 42 at the expense of the Contractor unless the tests indicate satisfactory construction.

6. The Contractor shall provide and maintain for the use of the Owner's testing agency adequate facilities for proper curing of concrete specimens on -the project in accordance with Method of Making and Curing Concrete Test Specimens in the Field, ASTM C 31.

7. The Contractor shall provide the Owner with batching tickets from each and every truck. The following information shall be shown:

    1. Truck Number
    2. Ticket number
    3. Time batched
    4. Time arrived on job site
    5. Amount of rock, sand, cement, admixtures and total water
    6. Mix number

8. The Owner's Quality Control Technician will advise the Owner of any and all noncompliance by the Contractor.

END OF SECTION

SECTION 05120

STRUCTURAL STEEL

PART 1 GENERAL

1.01 SCOPE

A. This specification establishes requirements for detailing, furnishing, fabricating and erecting structural steel framing and miscellaneous steel. Structural and miscellaneous steel includes all items listed in Section 2.0 Classification of Materials, of AISC code.

1.02 ATTACHMENTS

A. The following attachments form an integral part of this specification:

1. Specification 9900 - Paints and Coatings.

1.03 CODES, SPECIFICATIONS AND REFERENCES

A. Codes and Specifications - The detailing, fabrication and erection of structural steel framing shall comply with the latest edition of codes and specifications listed below. Any conflicts between this specification, drawings, and codes shall be brought to Owner's attention. The conflict shall be resolved in writing before work begins.

1. AWS Code - "Structural Welding Code-Steel AWS D1.1," by the American Welding Society.
2. AISC Code - "Code of Standard Practice for Steel Buildings and Bridges," by the American Institute of Steel Construction.
3. AISC Specification - "Specification for the Design, Fabrication and Erection of Structural Steel for Buildings, by the American Institute of Steel Construction.
4 Research Council on Structural Connections Specification - "Specification for Structural Joints Using ASTM A325 or A490 Bolts," by the Research Council on Riveted and Bolted Structural Joints of the Engineering Foundation.

B. References - The following are referred to elsewhere in this specification or in the above codes and specifications:

1. AISC Manual - "Manual of Steel Construction," by the American Institute of Steel Construction.
2. ASTM Standards - "ASTM Standards," by the American Society for Testing and Materials.
3. ANSI Standards - "American National Standards," by the American National Standards Institute.

C. Design Requirements

1. Substitution of Members - If section designated on drawings cannot be obtained, Contractor may make substitution only after receiving Owner's approval in writing. Substitution shall be section of at least equal strength and shall conform to design requirements.

2. Connections - The following provisions shall apply to all members except bracings:

a. If beam reactions are not shown on drawings, design the connections to support one half the total uniform load capacity shown in the Allowable Uniform Load Tables in the

AISC Manual, for the given shape, span and specified grade of steel. Generally, one-sided connections shall not be used.

b. Design the connections without increase in allowable unit stresses. Minimum connection design force shall be equal to the capacity of two 3/4 in. diameter ASTM A325 high strength bolts in single shear.

c. Design all gusset plates and clip angles of beams subjected to direct tension for the axial load shown on the drawings. Gusset plates and clip angles shall have a minimum thickness of 5/16 in. unless otherwise noted on drawings.

.3 Bracing Connections - The following provisions shall apply to all bracing members:

a. If axial bracing loads or connection requirements are not shown on the drawings, minimum bracing connection design force shall be equal to the capacity of two 3/4 in. diameter ASTM A325 high strength bolts in single shear. Design the connections without increase in allowable stresses.

b. Design all gusset plates, clip angles and connecting plates of members subjected to direct tension/compression for the axial load shown on the drawings or the capacity of the connections if forces are omitted. Gusset plates and clip angles shall have a minimum thickness of 5/16 in. unless otherwise noted on drawings.

4. Bolted Joints - Bolted joint details shall conform to requirements of the Research Council Specification on Structural Connections per Par. 1.3.1.4.

a. Main Connections - Use ASTM A325 high strength bolts.

b. Secondary Connections - Use ASTM A307 unfinished bolts for connection of secondary members such as purlins and girts unless designated otherwise.

c. Welded Joints - Welded joint details shall conform to the requirements of AWS Code Dl .1 per Par. 1.3.1.1.

D.. Drawings

1. Shop Detail Drawings - Vendor shall furnish completed and checked Shop Detail Drawings. Each drawing shall be referenced to the related Structural Design Drawing. Original tracings of shop detail drawings shall become the Owner’s property.

2. Erection Drawings - Vendor shall furnish completed and checked Erection Drawings. Each drawing shall be referenced to the related Structural Design Drawing. Where field welding is required, show on Erection Drawings the type, size and amount. Vendor shall furnish list showing the types, diameter, length and placement of field bolting. Original Erection Drawings shall become the Owner’s property.

3. Submittals - The following indicates the number of sets of drawings to be furnished by contractor.

a. Contractor shall prepare and submit four (4) prints of all shop details drawings for all structural and miscellaneous steel to Owner for approval prior to fabrication. In general, two (2) prints will be returned to the contractor marked either “Approved as Noted” or “Resubmit for Approval.” One (1) approved set of prints will be sent to the site

representative.

b. The contractor shall submit either the originals or mylar sepias of all shop drawings at the end of construction for owner records. This final submittal shall reflect all changes requested by owner on the approval drawings. In addition, all “as built” conditions shall be reflected on the final drawings.

PART 2 PRODUCTS

2.01 MATERIALS

A. Contractor shall supply materials designated, or equal. Materials shall meet the following requirements, unless designated otherwise on the drawings.

B. Structural Steel W and WT Shapes - ASTM A992.

C. Structural Steel Other shapes, Plates and Bars - ASTM A36.

D. Grating - For floors or stair treads, welded steel, sized per drawings, with serrated bearing bars and twisted cross bars unless otherwise indicated on drawings.

E. Handrail

1. Pipe Handrail - 1.25 in. (1.5 in. nominal OD.) standard weight carbon steel pipe, ASTM A53 Grade B. with 1/4 in. thick steel toe plate (see drawings for depth).

2. Angle Handrail - 2.5 in. by 2.5 in. by 1/4 in., ASTM A36, welded construction, with 1/4 in. thick steel toe plate (see drawings for depth).

F. Door Frames - ASTM A36 steel unless otherwise indicated on drawings.

G. Pipe Ladders - ASTM A53 Grade B standard weight pipe, sizes per drawings.

H. Bolting Materials - Use the type of bolting specified on drawings, in Par. 1.4.4, and as follows:

1. High Strength - Tempered carbon steel high strength bolts, ASTM A325, with hardened washers, under rotating part of nut and bolt assembly. Galvanized nuts shall be ASTM A563 Grade DH or ASTM Al 94 Grade 2H.

2. Unfinished Bolts - Low carbon steel nuts and bolts, ASTM A307. Washers are required.

3. Countersunk Flat Head Bolts - ASTM A307, ANSI B1 8.5.

4. Headed Stud-Type Shear Connectors - ASTM A108, Grade 1015 or 1020 with a minimum tensile strength of 60,000 psi.

5. Fasteners For Grating - Fabco/H-3 stainless steel structural fasteners, No. 14 diameter with

Style #1 Weath-R-Seal stainless steel washers, both by Fabricated Products Div., Townsend Co. Assemble with stainless steel saddle clips.

6. Concrete Anchors - Heavy Duty Anchors by HILTI or Red Head.

I. Nonmetallic Shrinkage-Resistant Grout - Use one of the following, unless otherwise noted on the drawings, or equal:

1. Five Star Epoxy Grout by Five Start Products, Inc. (preferred).

2. “MASTERFLOW 713” or “MASTERFLQW 928” by MASTER BUILDERS.

K. Statements and Reports - Upon request of owner, vendor shall supply certified statements or copies of mill test reports for specified materials, which are required to conform to indicated ASTM or other standard specifications.

PART 3 EXECUTION

3.01 FABRICATION

A. General - Fabricate all steel for delivery sequence that will expedite erection and minimize field handling of materials. Contractor may utilize shop welded frame construction or field bolted construction at his option; however, all field connections shall be bolted.

B. Marking - All members shall be clearly marked, and erection drawings shall be furnished showing clearly the location of all members for ease in erection.

C. Shop Assembly - Items shall be completely shop assembled, where practicable, ready for field erection. Assemble and weld built-up sections by methods that will produce true alignment of axes without warp. All steel shall be galvanized after fabrication is completed. Welding of units shall be completed before galvanizing starts.

D. Columns - Finish bearing ends to allow full bearing on entire cross-sectional area of member at both column splice and base plate.

E. Handrails - Dimensions and detailing of handrails shall be as shown on standard detail drawings. Perform all welded construction unless indicated otherwise on drawings. Remove all weld spatter, and grind all welds, metal projections and sharp edges to a smooth contour. Use post-mounting method designated on drawings.

1. All corner turns for pipe handrail shall be made by bending, except that acute angles of pipe handrail shall be made by mitering. All corner turns of angle handrail shall be made by mitering. Set posts plumb within 1/8 in. of vertical and fasten to stair stringers and/or platform framing. Set longitudinal members parallel with each other and with floor or stair stringers to within 1/8 in. each 10 ft.

2. Field Joints - All pipe handrail joints have been field seal welded. Comply with the following requirements:

a. Use materials and methods that minimize distortion and develop strength and corrosion resistance of base metals.

b. Obtain fusion without undercut or overlap, and remove welding flux immediately.

c. At exposed connections, finish exposed welds and surfaces smooth and blended so that no roughness shows after finishing, and welded surface matches contours of adjoining surfaces.

F. Connections - Shop-weld or field-bolt connections, unless designated otherwise on drawings.

G. Welding - Shall follow the AWS Code – "Structural Welding Code-Steel AWS D1.1," by the American Welding Society.

H. Tubes & Pipes - All galvanized pipe and tube sections shall have vent holes.

1. All bolts shall be galvanized.

2. Refer to attached project coating schedule for coating requirements.

3.02 DELIVERY, STORAGE, & HANDLING

A. Delivery - Deliver materials to site at such intervals to ensure uninterrupted progress of work.

B. Storage - Structural material, either plain or fabricated, shall be stored above the ground upon skids, blocking or other supports. Material shall be free from dirt, grease and other foreign matter.

C. Handling - Care shall be taken during handling and erection to prevent damage to connections, attachments, and to minimize damage to finished paint. Any damaged paint or galvanized surfaces shall be repaired as per touchup section of attached coating specifications.

3.03 ERECTION

A. General - Any special instructions noted on Structural Design Drawings shall be followed during erection.

B. Temporary Bracing and Supports - Provide and maintain temporary bracing as required to develop structural integrity during erection. Remove such bracing upon completion of work.

C. Bolting - Installation, tension control, type of equipment used and inspection methods shall conform to Research Council On Structural Connections Specification per Par. 1.3.1 .4 above. Bolting materials shall conform to Par. 2.7 and shall be high strength type unless other types are permitted by drawings or by this specification. Bolts identified on the drawings as slip critical or direct-tension shall be installed by “turn of the nut” method, all other bolts shall be brought to a “snug-tight“ condition only.

D. Field Welding and Cutting - Field welding shall be per design drawings only. Gas blowing and reaming shall not be permitted for making holes, all holes shall be drilled. Cutting or welding to correct fabrication errors shall be done only with consent of Owner.

E. Anchor Bolts - Anchor bolts will be furnished and installed by concrete contractor.

F. Framing - Erect framing plumb and true. Connect securely all work as erection progresses, providing for all wind and erection stresses and dead and live loads.

G. Columns - Columns shall be plumb within the tolerance listed in AISC Code, and there shall be uniform bearing pressure under the base plates.

1. Columns shall be set with their base plates fully seated on leveling plates.

2. Columns may be set without leveling plates by shimming and grouting base plates.

H. Milled-End Compression Members - Connect splices only when contact surfaces are fully seated and secured in complete contact.

I. Floor Grating

1 Installation - Fasten grating with stainless steel fasteners and stainless steel saddle clips per Par. 2.7.5 above. Fasteners shall be provided two per panel at each supporting member.

2. Openings - All openings in grating shall be banded prior to application of coating.

J. Touch-up Painting - Refer to project painting specifications.

3.04 QUALITY CONTROL

A. Inspection - Material and workmanship are subject to inspection in mill, shop and field by qualified inspectors supplied by Owner. Failure of Owner to reject defective material or inferior workmanship does not absolve Contractor's responsibility.

B. Provide access for testing agency to places where structural steel work is being fabricated or produced so that required inspection and testing can be performed.

C. Correct deficiencies in structural and/or miscellaneous steel work that inspections and laboratory tests reports have indicated to be not in compliance with requirements. Perform additional tests, at contractor's expense, as necessary to reconfirm any noncompliance of original work and to show compliance of corrected work.

END OF SECTION

SECTION 09900

PAINT AND COATINGS

PART 1 GENERAL

1.01 SECTION INCLUDES

A. The contractor shall provide all labor, material, tools, equipment and supervision as required to complete all work as indicated in this section.

B. Work shall include all surface preparation, cleaning and painting, including touch up. Contractor is also responsible for protection of newly painted surfaces during transportation and installation. *The contractor in conformance with this specification shall touch up damaged surfaces.*

1. Material - The contractor shall furnish all materials.
2. Shop Painting - All new steel shall be shop painted. Field painting of new steel shall be limited to touch up as required.
3. Manufacturer's Instructions and Recommendations - The contractor shall be familiar with the manufacturer's instructions as to the surface preparation and installation of all paint. He shall comply with all manufacturers' recommendations. Paint applied contrary to instructions shall be removed, the surface shall be re-prepared and new paint installed at no cost to owner.
   If the contractor chooses a comparative product by a manufacturer other than those listed under Section 2, he shall submit all pertinent product data to owner site representative prior to starting work. He may not apply any paint until he receives approval from Owner's site representative.

PART 2 PRODUCTS

2.01 MATERIALS

A. Materials to be used shall comply with one of the following approved paint systems. It should be noted that owner's site representative might substitute comparative products by other manufacturers only with prior approval.

	Devoe
Epoxy Primer	Bar-Rust 235 (Buff Color)
Epoxy Intermediate Coat	Bar-Rust 235(Off White)
Aliphatic Urethane Finish Coat	Devthane 379 High Build Gloss

B. Color - The finish coat color shall be as specified below:

Structural and Miscellaneous Steel	Clay Tan
Handrail and Toe Plate	Safety Yellow

Color Standards	**Devoe**
Clay Tan	#1600
Safety Yellow	#9400

PART 3 EXECUTION

3.01 GENERAL

A. This system includes an epoxy primer followed by an epoxy polyamide intermediate coat and an aliphatic urethane finish coat. The system exhibits a durable high gloss finish with excellent chemical resistance.

B. All coats shall be uniformly applied in a workmanlike manner. Paint shall be thoroughly mixed and applied in accordance with the manufacturer's instructions. Each coat shall be evenly applied free from runs, sags, pinholes and other defects. Successive coats shall be of different colors to facilitate inspection.

C. Film imperfections such as "orange peel" and "dry over-spray" are unacceptable and shall be corrected at no cost to owner.

D. All work shall be done with spray equipment, roller or brush as recommended by the manufacturer

1. Surface Preparation - Prepare surface by sandblasting to near-white metal (SSPC-SP 10).
2. Primer - Priming (1 coat) shall be done immediately after cleaning while the prepared surface is free of dust and other contaminants. The allowable time between cleaning and painting shall be determined by the humidity, cleanliness, etc., of the area. Good judgment shall be used.

   The dry film thickness of the primer coat shall be 2.5 to 3.5 mils.

   Allow a 12-hour cure time before applying the intermediate coat.

3. Intermediate Coat - Apply a polyamide cured epoxy intermediate coat consisting of one coat applied in multiple passes to yield a minimum thickness of 4 mils dry.

Allow a 12-hour cure time before applying the finish coat

4. Finish Coat - Apply a one-coat aliphatic finish coat consisting of multiple passes to yield 1 1/2 to 2 mils dry.

5. Touch Up - After erection of steel the contractor shall power tool clean, prime and touch up all unpainted, burned and damaged areas. Oil and grease shall first be removed per solvent cleaning SSPC-SP 1.

   Clean all surfaces per SSPC-SP 3 (Power Tool Cleaning). Surface shall not be burnished smooth. The profile depth shall be 1 1/2 to 2 mils.

   Apply one coat of epoxy primer immediately after cleaning. The minimum dry thickness shall be 3 mils dry.

Intermediate coat application and film thickness shall be the same as for parts 3.3 and 3.4 above.

3.02 INSPECTION

A. Notification - Contractor shall notify the owner site representative or his designate after surface preparation and before the application of each successive coat of paint. Contractor shall allow for inspection of the surface preparation and each coat of paint.

B. Paint Thickness - The paint thickness shall be measured by a magnetic instrument approved by owner or by another appropriate instrument approved by owner.

END OF SECTION

SECTION 11231

LOW PROFILE AIR STRIPPER

PART 1 GENERAL

1.1 SECTION INCLUDES

A. Low profile, shallow tray air stripper and associated components.

1.2 SUPPLIED BY OWNER

A. OWNER will arrange and pay for visual inspection of the shop fabrication.

1.3 SYSTEM DESCRIPTION

A. The low profile, shallow tray air stripper (Air Stripper) treatment system will consist of one air stripper unit to remove VOCs from extracted groundwater. The system is designed for 160 gpm with an air flowrate of 1800 cfm. All equipment will be located inside a building in Attica, Indiana.

1.4 PROGRESS SUBMITTALS

A. Shop Drawings: Indicate:

1. Arrangement drawings showing the layout of components and equipment and the dimensions of concrete support structures.

2. Location and size of pipe connections.

3. Loads on the structural floors and distribution of loads.

4. Full dimensional details of stripper piping.

5. Electrical details and power requirements.

6. The make, model number, and full details of all appurtenant equipment such as valves, operators, gauges, and control panel details.

7. Equipment grounding details.

8. Description of the stripper operation, including estimated time duration and manpower requirements.

9. Provide one complete set of the operating and maintenance instructions, including parts lists, to OWNER as soon as possible after review of the equipment is completed. On approval, submit the remaining copies. One set must be available to OWNER and CONTRACTOR at least one month prior to delivery of the equipment.

B. Product Data: Indicate engineering data, head loss, pressure rating, electrical characteristics.

C. Test Reports: Include performance data and head loss curves for piping components.

D. Manufacturer's Instructions: Indicate application conditions and limitations or use, include instructions for storing, handling, preparation, installation, setup, and adjustment.

1.5 CLOSEOUT SUBMITTALS

A. Record Documents: Indicate actual location of equipment and location of interconnecting piping and valves.

B. Operation and Maintenance Data: Indicate operation, maintenance, and parts lists including list of recommended spare parts. Provide three complete copies of the operating and maintenance instructions, including parts lists for all of the equipment. One copy to be single sided for production of additional operation and maintenance manuals. Bind material in sections in hard backed binders.

C. Warranties: Complete warranty forms in OWNER's name and register warranty. Provide 1-year manufacturer's warranty for the system.

1.6 QUALIFICATIONS

A. Manufacturer: Company specializing in manufacturing the products specified in this Section with minimum five years documented experience.

1.7 DELIVERY, STORAGE, AND HANDLING

A. Accept equipment on the Site as delivered by supplier. Inspect for damage.

B. Store in clean and dry area. Protect from excessive heat and cold.

1.8 SYSTEM STARTUP AND COMMISSIONING

A. Start-up and commissioning services can be requested by the OWNER at any time, and the CONTRACTOR or equipment supplier must be capable of supplying this service.

B. Site commissioning services include:

1. Inspecting the installation and certification that installations and connections are satisfactory.
2. Inspecting the interior of the unit to ensure they are clear and clean.
3. Checking that field painting of items primed in the shop has been carried out to the satisfaction of manufacturer before filling system, and that items finish painted in the shop have been touched up as required.
4. Supervising the startup of equipment.
5. Checking controls and instrumentation, and confirming that the process is producing water of specified quality. Completion of calibration and adjustments.

C. Service technicians shall be equipped with necessary equipment including signal generators and pressure calibration kits to verify the setup of controls and instrumentation.

D. The cost of Site services quoted assumes one visit to the Site to carry out the above work, assuming zero defects or problems with the equipment supplied. Allow for two additional days of operator training, which will be performed after but not necessarily subsequent to installation and startup. Additional visits or time on Site, due to equipment problems or defects in the equipment supplied herein, shall be at no additional cost to OWNER.

E. Provide a detailed written report advising the results of Site inspection, startup, and process checking, with numerical data to support the latter.

F. Spare parts are not required, but Supplier shall provide a list of recommended spare parts, complete with prices.

PART 2 PRODUCTS

2.1 DESIGN REQUIREMENTS

A. Low profile air stripper system. Acceptable manufacturer:

1. BISCO Environmental / North East Environmental Products, Inc. (NEEP Systems), Taunton, MA.

B. Design the equipment for continuous operation at peak hydraulic capacity.

C. Design all parts with adequate factors of safety to withstand the maximum mechanical stresses to which they might be subjected during the course of plant operation.

D. The arrangement of parts must be such as to allow ready accessibility for erection, inspection, maintenance, and repair.

E. The stripper system will be skid mounted inside on a concrete pad.

F. Include all other equipment required to provide a complete and functional system meeting all performance requirements specified herein.

G. Stripper to have induced draft design.

2.2 PERFORMANCE REQUIREMENTS

A. Under all operating conditions the low profile air stripper system is required to reduce contaminants from the peak influent concentrations to below to the treated water concentrations requirements as stipulated in the design report. (The influent and effluent requirements are also listed below). These are the minimum performance requirements of Base Bid equipment and any alternative systems offered. Supplier shall be responsible for ensuring and guaranteeing that the design of the equipment and system will meet these objectives. If manufacturer cannot meet these requirements a statement must be included in the bid proposal.

	Influent Concentrations (ppb)	Performance Standard (ppb)
1,1-Dichloroethene	1.8	<1
cis-1,2-Dichloroethene	660	<70
trans-1,2-Dichloroethene	14	<5
Vinyl Chloride	25	<2
TCE	3000	<5

B. Design parameters for low profile air stripper:

1. Number of Units: One.
2. Process Design Flow: Water - 160 gpm. Air – 1800 cfm.
3. Model: 31241 (4-tray unit) stainless steel.

C. Equip stripper with manways for inspection and repair service.

D. Equip system with lifting lugs for installation and maintenance service.

E. Equip stripper with the following connections at a minimum (for location see drawings):

1. Influent: 4-inches.
2. Effluent (two connections - siphon drain on lower): 8-inches.
3. Air Inlet: 10-inches.
4. Air Outlet: 16-inches.
5. High water float level switch: 1/2-inches.

6. Drain (siphon drain): 2-inches.
7. Sight tube (two connections): 1/2-inches.
8. Low pressure switch: 1/2-inches.
9. Air pressure gauge.
10. View Port Set.

F. Air Stripper Air Blower

1. Performance: 1800 scfm at 22-inches w.c.
2. Blower Motor: 15 hp, 460V, 3-phase. Motor to be specified per Division 16 – Electrical.
3. Blower accessories: 10-inch Discharge silencer, inlet filter, and casing drain.
4. Connection piping from blower to air stripper.

2.3 MATERIALS

A. All materials used shall be selected for their suitability for each particular duty and will comply with the latest ASTM standards unless otherwise provided.

B. All materials shall be new and of the best quality; all workmanship shall be first class.

C. The mechanical aspects of all equipment shall comply with the latest ASME standards unless otherwise provided.

D. Stripper steel shall be fabricated from 304L stainless steel.

E. All anchor bolts, nuts, drill-in adhesive anchors, hangers for insertions in concrete shall be of Type 304 or 316 stainless steel.

F. Piping:

1. Arrange piping so that valves, pressure switches, gages, and other items which may require regular inspection or maintenance are conveniently accessible. Provide piping with drains at all low points, and air release valves at all high points.
2. The design of the piping shall allow for proper restraint under all anticipated conditions, particularly where surges may occur and high transient pressures could result, or where different temperatures occur seasonally.
3. Where piping connections are made between adjacent structures, provide at least 1 flexible coupling if any possibility of settlement or movement exits.

2.4 PROTECTIVE COATINGS

A. Section 09900 - Submittals: Paints and coatings.

B. All pre-finished items such as valves, operators, etc. shall receive Supplier's standard protective coating. Protect machined ferrous surfaces with grease or anti-rusting compound.

2.5 PIPING, VALVES, AND APPURTENANCES

A. Section 15410 – Process Piping and Valves.

B. It is the intent of these specifications to outline components of an air stripper system with a proven performance track record. Air stripper system vendor shall supply face piping described below, at a minimum. The air stripper shall be supplied with pipes and valves for operation as described previously.

1. Water Line: PVC.
2. Air Line: FRP.

C. Butterfly Valves: AWWA C504; as manufactured by Pratt, DeZurik, Keystone or equal. Valves 8 inches and larger shall have gear operators with hand wheel. Butterfly valves shall be cast or ductile iron body, ductile iron with Ni-chrome edge disc, stainless steel shaft, and Buna-N seat.

D. Pressure Gauges: 4 ½-inch nominal diameter, installed with isolation valves. Manufactured by Trerice, Ashcroft or equal.

E. Pipe Hangers and Supports: Provide for all face piping. All pipe supports shall have liberal strength and stiffness to support pipes under the maximum combination of peak loading conditions to include pipe weight, liquid weight, liquid movement and pressure forces, thermal expansion and contraction, vibrations, and all probable externally applied forces. Support spacing shall be a maximum of 10 feet with additional support provided at fittings, valves, and changes in direction.

PART 3 EXECUTION

3.1 EXAMINATION

A. General Requirements: Verification of existing conditions before starting work.

B. Verify dimensions and elevations of structures and location and sizes of poured in place anchor bolts. Provide for adjustments in sizes at interconnecting piping where actual dimensions vary from the proposed drawings. Verify that openings, bases, anchorages, sleeves, and hangers are ready for the complete installation of the equipment.

C. Verify that surfaces and Site conditions are ready to receive Work.

3.2 INSTALLATION

A. Installation shall be done by General Contractor, based on detailed written instructions from Supplier. This will include connecting mechanically and electrically any components not base mounted and shop connected, as well as typical field connection of piping and power.

PART 4 MEASUREMENT AND PAYMENT

4.1 GENERAL

A. Section 01200 - Price and Payment Procedures: Requirements for measurement and payment.

END OF SECTION

SECTION 13200

EQUALIZATION TANK

PART 1 GENERAL

1.1 SECTION INCLUDES

A. High Density Cross-linked Polyethylene (HDPE) Equalization Tank .

1.2 PROGRESS SUBMITTALS

A. Shop Drawings: Indicate tank dimensions, material, wall, head, and bottom thickness fabrication requirements, support and anchoring details, design loads, connection details, orientation, elevations, tolerances, and finish details.

B. Design Data: Indicate manufacturing specification, pressure.

C. Manufacturer's Certificates: Certify that tanks meet or exceed specified requirements.

D. Manufacturer's Instructions: Indicate rigging, lifting, and fastening procedures.

E. Manufacturer's Field Reports: Indicate that tanks have been inspected and tested in accordance with Specifications.

1.3 CLOSEOUT SUBMITTALS

A. Section 01700 – Execution Requirements

B. Record Documents: Indicate location of tanks, orientation and location of fittings.

C. Field Test Reports: Indicate results of initial on-Site air pressure test.

D. Operation and Maintenance Data: Indicate inspection, maintenance, and tank testing requirements. Provide three complete copies of the operating and maintenance instructions, including parts lists for all of the equipment. One copy to be single sided for production of additional operation and maintenance manuals. Bind material in sections in hard backed binders.

E. Warranties: Completed original warranty forms filled out in OWNER's name and registered with manufacturer. Provide two year manufacturer's warranties for tanks. Warranty to include coverage for defects in material and workmanship.

1.4 QUALIFICATIONS

A. Manufacturer: Company specializing in manufacturing the products specified in this Section with minimum three years documented experience.

B. Installer: Company specializing in performing the work of this Section with minimum two years documented experience and approved by manufacturer.

1.5 DELIVERY, STORAGE, AND HANDLING

A. Accept tanks on the Site. Inspect for damage.

B. Protect tanks from damage by weather and construction traffic.

PART 2 PRODUCTS

2.1 HDPE EQUALIZATION TANK

A. Flat-bottom, crossed-linked high density polyethylene tank, as manufactured by IMG (Germantown, TN) or equal.

B. Capacity: 5,500 gallons.

C. Seamless, 1-piece construction with 1.9 specific gravity hydrostatic capacity.

D. UV inhibitor for sunlight protection, translucent observable liquid level.

E. Molded in tie-down lugs and graduations.

F. 24-inch top mounted manway, 24-inch side mounted manway.

G. Nozzles, flanged, orientation as shown on drawings:

1. Inlet: 4-inches.
2. Outlet: 4-inches.
3. Instrument: (2) 3-inches.
4. Spare: 3-inches
5. Vent: 4-inches.

H. Operating Conditions:

1. Liquid: Groundwater with VOCs.

I. Nozzle and gasket material suitable for product stored.

J. All drains and pump suction nozzles are to be supplied with siphon drains.

PART 3 EXECUTION

3.1 INSTALLATION

A. Install in accordance with manufacturer's instructions.

3.2 FIELD QUALITY CONTROL

A. Section 01400 – Quality Control Requirements: Quality Control.

B. Hydrostatically test tank after installation.

3.3 PROTECTION OF FINISHED WORK

A. Section 01700 – Execution Requirements: Protection of installed construction.

B. Protect finished work from construction activities.

END OF SECTION

SECTION 15051

BURIED PIPING INSTALLATION

PART 1 GENERAL

1.01 SECTION INCLUDES

A. Contractor is to supply all materials, labor, supervision, tools and construction equipment as required to complete all work in a timely and professional manner.

B. All types of buried piping unless specifically included under other Sections. These include, but are not limited to

1. Furnishing and installing high-density polyethylene (HDPE) pipe and fittings.

a. Extraction well piping and fittings (SDR 11);

b. 8" HDPE discharge piping and fittings (SDR 17).

2. Furnishing and installing polyvinylchloride (PVC) pipe and fittings.

a. As indicated on the drawings.

C. Supports, restraints, jointing and gasketing materials, specials, couplings, flexible couplings, mechanical couplings, harnessed and flanged adapters, sleeves, tie rods.

D. Contractor shall unload, handle, store and install piping in accordance with the manufacturer's instructions. Care will be taken to avoid damaging pipe during loading and unloading operations.

1.02 RELATED SECTIONS

A. Section 02221 - Trenching, Backfilling and Compacting.

1.03 REFERENCES

A. Comply with applicable provisions and recommendations of the following, except as otherwise shown or specified.

1. American Society for Testing and Materials, current edition, hereafter referred to as ASTM.
2. NSF Standard 14 - Plastics Piping System Components and Related Materials.

1.04 QUALIFICATIONS

A. Installer: Company specializing in performing the work of this section with a minimum of three (3) years experience.

1.05 SUBMITTALS

A. Shop Drawings: In accordance with the Special Conditions of these specifications, submit for approval the following:

1. Laying schedules and detailed drawings in plan and profile for all piping 16-inch size and larger.
2. Show full details of piping, specials, and connections to existing pipes and structures.

B. Tests: Submit description of proposed testing methods, procedures, and apparatuses. Submit copies of all test reports.
C. Certificates: Submit certificates of compliance with referenced standards.

1.06 RECORD DOCUMENTS

A. Record actual locations and sizes of pipes.

1.07 REGULATORY REQUIREMENTS:

A. Comply with applicable requirements of all governing agencies and the following codes:

1. State and Local Plumbing Codes.

1.08 ENVIRONMENTAL REQUIREMENTS

A. Underground piping shall not be installed when bedding are wet or frozen.
B. Do not lay pipe in water.

PART 2 PRODUCTS

2.01 MATERIALS

A. HIGH DENSITY POLYETHYLENE (HDPE) PIPE

1. HDPE shall be manufactured from materials meeting the requirements of ASTM D 1248 for Type III, Grade P34, Category 5, Class C, and have a PPI rating of PE3408. The pipe produced from this material shall have the dimensions and wall thickness as set forth in ASTM F 714 for the Size and Standard Dimension Ratio (SDR) shown on the Drawings.

2. HDPE shall be marked at maximum 5-foot intervals with manufacturer's name or trademark, nominal size and SDR, cell classification, ASTM D 1248, and extrusion date, period of manufacture, or lot number.

3. All fittings shall be molded unless not available due to configuration or size.

4. All fabricated fittings shall be provided by the pipe manufacturer or approved fabricator and shall have the same wall thickness and pressure rating equal to or greater than that of the HDPE pipe. Fabricated fittings are subject to approval by the Engineer.

B. POLYVINYLCHLORIDE (PVC) PIPE

1. Underground PVC Schedule 40 pipe shall conform to the requirements of ASTM D 1785. Refer to Drawings for sizes required.

2. Pipe and fittings shall be joined by solvent welding in accordance ASTM D 2564.

PART 3 EXECUTION

3.01 EXAMINATION

A. Pipe:

1. All pipe shall be carefully inspected prior to installation.
2. The CONTRACTOR is responsible for assuring that damaged pipe is not used. Defective pipe shall be removed from the site.
3. Any pipe found to be broken or defective after it has been installed shall be removed and replaced at the CONTRACTOR'S expense.
4. If there is a question regarding the quality of any pipe or fittings delivered to the site, the CONTRACTOR will supply to the ENGINEER a certified letter from the pipe vendor stating that the pipe meets all conditions of the Specifications. If certified letter cannot be supplied, questionable material will be replaced at the CONTRACTOR'S expense.

B. Bedding Condition: Pipe shall be installed only on bedding inspected and approved by the Owner Site Representative. Installation shall proceed immediately upon receipt of approval.

C. Request instructions from the ENGINEER when there is a conflict between existing piping systems and equipment and proposed piping to be installed.

3.02 PREPARATION

A. Lines and Grades:

1. Accurately lay pipe to the lines and grades shown on the Contract Drawings and specified herein.
2. Lay pipe on a straight sight line and grade.
3. Any section of pipe found to be laid at the wrong grade or to have settled shall be dug up and relaid to the satisfaction of the ENGINEER at the CONTRACTOR'S expense.
4. The CONTRACTOR is responsible for maintaining lines and grades.

B. Trench:

1. Prepare trench and bedding conditions in accordance with Sections 02221 and the details shown on the Contract Drawings.
2.
3. Dig bell holes sufficiently large to ensure making and checking of joints properly.

C. Pipe:

1. Each piece of pipe or fitting, except straight pipe with no outlets, shall be clearly marked with a designation which shall conform with designations shown on the Shop Drawings.
2. Class designation shall be cast or painted on each piece of pipe or fittings 4-inches in diameter and larger.
3. Piping, 3-inches diameter and less shall be clearly marked by manufacturer as to material, type and rating.
4. Clean pipe thoroughly.
5. Apply lubricant in accordance with the manufacturers written instructions.
6. Insert the gasket and seal it, if required, in accordance with manufacturer's written directions.
7. Field cutting of pipe, if necessary, shall leave a smooth end and be performed in accordance with the manufacturer's written instructions.

3.03 INSTALLATION

A. General:

1. HIGH DENSITY POLYETHYLENE PIPING
   a. Construct HDPE of the size and SDR and in the locations and to the elevations and grades shown on the Drawings. Provide pipe supports as needed.
   b. Join sections by the thermal butt fusion process in accordance with manufacturer's recommendations. Use of hand-held fusion plates will not be permitted. The joints shall have a tensile and shear strength equal to or greater than that of the pipe and the joint shall be watertight.
   c. Use electro-fusions pipe couplings where specifically shown on the Drawings or as otherwise directed by Owner or Owner's Representative. Follow instructions from the electro-fusion system manufacturer.

2. PVC PIPING
3. a. Construct PVC piping of the size and schedule and in the locations and to the elevations and grades shown on the Drawings.

4. Request instructions from the ENGINEER before proceeding if there is a conflict between the manufacturer's recommendations and the Contract Drawings.

5. Pipe, fittings, and accessories that are cracked, damaged or in poor condition or with damaged linings will be rejected and shall be replaced at the CONTRACTOR'S expense.

6. Earthwork required is included in Section 02221.

B. Pipe Bedding:

1. Bed pipe as specified in Section 02221 and as shown on the Contract Drawings. If a conflict exists, obtain clarification from the ENGINEER before proceeding.

C. Laying Pipe:

1. Conform to manufacturer's instructions and to applicable codes and standards.
2. Proper placement and compaction of pipe bedding materials around flexible pipe such as HDPE and PVC is critical. Install all pipes accurately to line and grade shown unless otherwise approved by the ENGINEER. Remove and relay pipes that are not laid correctly. Install HDPE and PVC in accordance with ASTM D 2321.
3. Slope piping uniformly between elevations given.
4. Backfill in accordance with Section 02221. Do not use frozen fill material or place on frozen subgrade. Place granular material in maximum 6-inch loose lifts under pipe haunches and compact with hand-operated vibrating compactor until firmly compacted to pipe spring line. Do not lay pipe in water. Maintain dry trench until jointing and backfilling are complete.
5. Place bell and spigot pipe so that bells face the direction of laying, unless otherwise approved by the ENGINEER.
6. Excavate around joints in bedding and lay pipe so that only the barrel receives bearing pressure from the trench bottom.
7. Permissible deflections at joints shall not exceed 50 percent of the amount allowed by manufacturer.
8. Prior to laying pipe, every precaution shall be taken to ensure that no foreign material enters the piping.
9. All pipe and fittings shall be carefully examined for cracks, damage or other defects while suspended above the trench before installation. Defective materials shall be immediately removed from site.
10. Interior of all pipe and fittings shall be inspected and all dirt, gravel, sand, debris or other foreign material shall be completely removed from pipe interior before it is moved into the trench. Bell and spigot mating surfaces shall be thoroughly wire brushed and wiped clean and

11. Every time that pipe laying is not actively in progress the open ends of pipe shall be closed by a watertight plug.
12. Field cutting pipe, where required, shall be made with a machine specially designed for cutting piping. Cuts shall be carefully done, without damage to pipe or lining, so as to leave a smooth end at right angles to the axis of pipe. Cut ends shall be tapered and sharp edges filed off smooth. Flame cutting will not be allowed.
13. Blocking under piping will not be permitted unless specifically excepted by the ENGINEER for special conditions.
14. Touch up protective coatings in a satisfactory manner prior to backfilling.

D. Jointing Pipe:

1. Clean completely all jointing surfaces and adjacent areas immediately before making joint.
2. Conform to all applicable manufacturer recommendations pertaining to jointing pipe.

E. Restraints and Supports:

1. Use restrained joints for piping systems where shown on the Contract Drawings.

F. Closures:

1. Provide all closure pieces shown or required to complete the Work.
2. Locate closures in straight runs of pipe.

3.04 WORK AFFECTING EXISTING PIPING AND UTILITIES

A. Location of Existing Piping:

1. Locations of existing piping and utilities shown should be considered approximate.
2. The CONTRACTOR is responsible for determining exact location of existing piping and utilities to which he must make connections, or which he may disturb during earth moving operations, or which may be affected by his work in any way.
3. Individual utility service mains are not shown on the Contract Drawings. These may include water, gas, telephone, electric, sanitary sewer or other service mains. The CONTRACTOR is responsible to locate these service mains and protect them from damage or injury during his construction operations.

3.05 FIELD QUALITY CONTROL

A. Pipe and pipe installation will be subject to rejection for any of the following reasons:

1. Failure to conform to the Specifications, particularly compaction under and around the pipe.
2. Defects indicating improper proportioning, mixing, or molding.
3. Damage ends where such damage would prevent making a satisfactory joint.
4. Excessive deflection of pipe.

END OF SECTION

SECTION 15235

PUMPS

PART 1 GENERAL

1.1 SECTION INCLUDES

A. Process pump and motor.

B. Extraction Well Pumps and motors.

C. Bedrock Extraction Well pump and motor.

D. Sump pump and motor.

E. Pump accessories.

1.2 PROGRESS SUBMITTALS

A. Shop Drawings: Indicate outline dimensions, general assembly, components, operating data, system drawings, materials of construction, and wiring diagrams.

B. Product Data: Include engineering data and electrical characteristics.

C. Test Reports: Include performance curves and head loss curves.

D. Manufacturer's Certificates: Certify that products meet or exceed specified requirements.

E. Manufacturer's Instructions: Include instructions for storing, handling, preparation, installation, setup, and adjustment of products.

F. Manufacturer's Field Reports: State that equipment has been installed in accordance with the manufacturer's requirements.

1.3 CLOSEOUT SUBMITTALS

A. Record Documents: Indicate actual locations of equipment. Indicate amps and voltage on each phase at startup.

B. Operation and Maintenance Data: Operation, maintenance, and parts lists including list of recommended spare parts. Provide three complete copies of the operating and maintenance instructions, including parts lists for all of the equipment. One copy to be single sided for production of additional operation and maintenance manuals. Bind material in sections in hard backed binders.

C. Warranties: Completed original warranty forms filled out in OWNER's name and registered with manufacturer. Provide one year manufacturer's warranty for metals, pumps, and seals.

1.4 DELIVERY, STORAGE, AND HANDLING

A. Accept equipment on the Site in factory containers. Inspect for damage.

B. Store in a clean and dry area. Protect from excessive heat and cold. Ventilate to prevent condensation.

PART 2 PRODUCTS

2.1 PROCESS PUMP

A. Centrifugal process pump, as manufactured by Goulds or equal.

B. Performance of Filter Feed Pump:

1. Flow: 160 gpm.

2. Total Dynamic Head: 35 feet.

3. Model: 3196 3 x 4 - 7.

4. Speed - Maximum: 1,750 rpm.

C. Operating Conditions:

1. Liquid: Water.

2. Specific Gravity: 1.0.

D. Pump Motor: 460 volt, 3-phase (inverter duty). Motor to be specified per Division 16 – Electrical.

E. Impeller 6 inch.

2.2 EXTRACTION WELL PUMPS

A. Submersible pumps, as manufactured by Grundfos or equal.

B. Equipment Tag Numbers: EW-01, EW-02, EW-03, EW-04, EW-05, EW-06, EW-07, EW-08, EW-09, EW-10, EW-11, EW-12, and EW-13.

C. Performance:

1. Flow: 10 gpm.

2. Total Dynamic Head: 110 feet.

3. Model: 10E8.

4. Speed - Maximum: 3,450 rpm.

D. Operating Conditions:

1. Liquid: Water.

2. Specific Gravity: 1.0.

E. Pump Motor: 460 volt, 3-phase. Motor to be specified per Division 16 – Electrical.

2.3 EXTRACTION WELL PUMPS

A. Submersible pumps, as manufactured by Grundfos or equal.

B. Equipment Tag Numbers: EW-14 and EW-15

C. Performance:

1. Flow: 6 gpm.

2. Total Dynamic Head: 100 feet.

3. Model: 10E5.

4. Speed - Maximum: 3,450 rpm.

D. Operating Conditions:

1. Liquid: Water.

2. Specific Gravity: 1.0.

E. Pump Motor: 460 volt, 3-phase. Motor to be specified per Division 16 – Electrical.

2.4 BEDROCK EXTRACTION WELL PUMPS

A. Submersible pumps, as manufactured by Grundfos or equal.

B. Equipment Tag Numbers: BEW-01

C. Performance:

1. Flow: 25 gpm.

2. Total Dynamic Head: 100 feet.

3. Model: 16E13.

4. Speed - Maximum: 3,450 rpm.

D. Operating Conditions:

1. Liquid: Water.

2. Specific Gravity: 1.0.

E. Pump Motor: 460 volt, 3-phase. Motor to be specified per Division 16 – Electrical.

2.5 SUMP PUMP

A. Sump pump, as manufactured by Goulds or equal.

B. Performance of Building Sump Pump:

1. Flow: 50 gpm.

2. Total Dynamic Head: 50 feet.

3. Model: 3885 WE1034H.

4. Speed - Maximum: 3,450 rpm.

C. Operating Conditions:

1. Liquid: Water.

2. Specific Gravity: 1.0.

D. Pump Motor: 460 volt, 3-phase. Motor to be specified per Division 16 – Electrical.

PART 3 EXECUTION

3.1 PUMP AND DRIVER INSTALLATION

A. The pumps shall be installed by qualified tradesmen having experience in the installation of this type of equipment.

B. Install in accordance with the manufacturers' recommendations. Mount pumps as shown on the Drawings. Where used, anchor bolt size and material shall be as shown in reviewed manufacturer's shop drawings. Bolts shall be accurately placed with templates. Coat bolt thread projections with lubricant to facilitate future nut removal.

C. All strain from attached piping shall be eliminated from the pumps and any evidence of pump or driver misalignment, noisy operation, or other signs of improper setting shall be corrected by CONTRACTOR.

3.2 PAINTING

A. Submerged metal surfaces of the new pumps, motors, and accessories specified herein shall be factory prepared and primed with the manufacturer's standard primer and finish coating. Stainless steel accessories shall not be painted.

3.3 FIELD TESTS

A. Functional Test: Prior to facility startup, all equipment shall be inspected for proper alignment, operation, connection, and satisfactory performance by means of a functional test.

B. Performance Test: Prior to acceptance of the installed pump, demonstrate proper operation of the pump at the guarantee point, at which time data shall be recorded on the total head, capacity, and power requirements of the pump. Driving motor voltage and amperage to be measured for each phase.

C. Testing Equipment: Furnish all instruments and labor as required for this procedure.

D. Test Failure: A unit failing the performance test shall be realigned and retested. If a pump fails the second test, the unit will be rejected and CONTRACTOR shall furnish a unit that will perform as specified.

END OF SECTION

SECTION 15410

PROCESS PIPING AND VALVES

PART 1 GENERAL

1.1 SECTION INCLUDES

A. Pipe and pipe fittings.

B. Pipe supports and hangers.

C. Valves.

1.2 REFERENCES

A. American National Standards Institute (ANSI):

1. B16.1 - Cast Iron Pipe Flanges and Flange Fittings.

2. B16.3 - Malleable Iron Threaded Fittings Class 150 and 300.

3. B16.4 - Cast Iron Threaded Fittings Class 125 and 250.

4. B16.18 - Cast Bronze Solder-Joints Pressure Fittings.

5. B16.22 - Wrought Copper and Bronze Solder Joints Pressure Fittings.

B. American Society of Mechanical Engineers (ASME): Boiler and Pressure Vessel Code, Section IX - Welding and Brazing Qualifications.

C. American Society for Testing and Materials (ASTM):

1. A36/A36M - Standard Specification for Carbon Structural Steel.

2. A53 - Standard Specification for Pipe, Steel, Black and Hot-Dipped, Zinc-Coated Welded and Seamless.

3. A350 - Standard Specifications for Forgings, Carbon and Low-Allow Steel.

4. B32 - Standard Specification for Solder Metal.

5. B88 - Standard Specification for Seamless Copper Water Tube.

6. D1784 - Standard Specifications for Rigid Chlorinated Polyvinyl Chloride (CPVC) Compounds.

7. F441 - Standard Specification for Chlorinated Polyvinyl Chloride (CPVC) Plastic Pipe, Schedules 40, 80, and 120.

D. American Water Works Association (AWWA):

1. C110 - Ductile - Iron and Gray - Iron Fittings, 3 Inch Through 48 Inch for Water or Other Liquids.

2. C151 - Ductile - Iron Pipe, Centrifugally Cast, for Water or Other Liquids.

3. American Water Works Association (AWWA): C504 - Standard for Rubber - Seated Butterfly Valves.

1.3 PROGRESS SUBMITTALS

A. Shop Drawings: Indicate piping arrangements for tanks, pumps, and equipment.

B. Product Data: Include material specifications and statements from manufacturer that materials will meet corrosion, temperature, pressure, and etc. requirements.

C. Test Reports: Indicate results on shop and field-testing.

D. Certificates: Certify that products meet or exceed specified requirements.

1.4 CLOSEOUT SUBMITTALS

A. Record Documents indicate location and size of pipes.

B. Warranties: Completed original warranty forms filled out in OWNER's name and registered with manufacturer.

1.5 QUALIFICATIONS

A. Manufacturer: Company specializing in manufacturing the products specified in this Section with minimum three years documented experience.

B. Installer: Company specializing in performing the work of this Section with minimum three documented years experience.

1.6 DELIVERY, STORAGE, AND HANDLING

A. Accept pipes on Site. Inspect for cleanliness and damage.

B. Protect pipes from dirt by closing ends.

PART 2 PRODUCTS

2.1 PIPE AND PIPE FITTINGS

A. Carbon Steel Pipe: ASTM A53 Schedule 80 threaded, Schedule 40 welded.

1. Pipe Joints:

a. Diameter up to 2-Inch: Threaded or welded.

b. Diameter over 2-Inch: Welded.

c. At Valves/Equipment: Flanged or threaded.

2. Malleable Iron Fittings: ANSI B16 Class 125 or 250, screwed.

3. Flanges: ANSI B16.1.

4. Gaskets: EPDM.

B. Polyvinyl Chloride Pipe: Type 1, Grade 1, Schedule 80, conforming to ASTM D1784 and ASTM D1785.

1. Fittings: PVC, Schedule 80, socket solvent weld.

2. Flanges Over 4 Inch Diameter: Vanstone; flanged.

3. Joints: ASTM D2855, Solvent weld with ASTM D2564 solvent cement.

C. Glass Fiber Reinforced Plastic Ducts: Glass fiber reinforced plastic with minimum 3/16 inch wall thickness as manufactured by Belco Manufacturing or equal. ASTM D 3567, ASTM C 582, AWWA M-45, ASTM D 3982.

2.2 PIPE SUPPORTS AND HANGERS

A. Piping shall be supported, in general, as described hereinafter and as shown by the Pipe Support Details on the Drawings. Manufacturers' catalogue figure numbers are typical of the types and quality of standard pipe supports and hangers to be employed. Special support and hanger details are shown to cover typical locations where standard catalogue supports are inapplicable.

B. No attempt has been made to show all required pipe supports and restraints in all locations, either on the Drawings or in the details, standard or custom made. Where pipe supports are shown on the Drawings, the intent is to present the general arrangement of pipe supports in the area represented as typical of similar arrangements to be used throughout the plant. THE ABSENCE OF PIPE SUPPORTS, RESTRAINTS, AND DETAILS ON ANY DRAWINGS SHALL NOT RELIEVE CONTRACTOR OF THE RESPONSIBILITY FOR PROVIDING THEM THROUGHOUT THE PLANT.

C. Pipe support and restraining system components shall withstand the dead loads imposed by the weight of the pipes filled with water and shall have a minimum safety factor of 5. Pipe supports shall withstand live loads created by pumped fluid thrust and shall be adequately anchored to resist such forces without undue shock, vibration, or damage to the piping system or related equipment.

D. Hangers:

1. As manufactured by Grinnel or equal:

2. Type: As shown on Drawings.

E. Unistrut and unistrut pipe clamps for small diameter lines.

F. Stands: Fabricated steel or reinforced concrete.

G. All piping shall be supported in a manner that will prevent undue strain on any valve, fitting, or piece of equipment. In addition, pipe supports shall be provided at changes in direction or elevation, adjacent to flexible couplings, and where otherwise shown. Pipe supports and hangers shall not be installed in equipment access areas.

2.3 BUTTERFLY VALVES

A. PVC butterfly valve as manufactured by Hayward or equal.

B. Type: lug.

C. Class: 150 pounds.

D. Shaft: Type 316 stainless steel.
E. Disk: PVDF.

F. Seat: EPDM.

G. Operators: Valves 6-inches and less provide with lever. Valves over 6-inches provide with gear box and wheel operator.

H. Accessories: For valves mounted over 5-feet above floor level provide chain wheel operator.

2.4 CHECK VALVES

A. PVC ball check valve as manufactured by Hayward or approved equal.

B. Class: 150 pounds.

C. Seals: EPDM.

2.5 STRAINER

A. PVC strainer as manufactured by Hayward or approved equal.

B. PVC body.

C. Class: 150 pounds.

D. Size: 4-inch.

2.6 BALL VALVES

A. PVC ball valves as manufactured by Hayward or approved equal.

B. Class: 150 pounds.

C. 316 Stainless Steel Screen.

PART 3 EXECUTION

3.1 PREPARATION

A. Inspect and clean pipe before installation.

B. Blow out with compressed air before installation.

C. Up-end pipe before installation and clear of scale.

D. Clean screwed joints with solvent before applying sealant to threads.

3.2 PIPE SUPPORT ISOLATION

A. Provide dielectric insulation on pipe hangers and supports to prevent electrolysis between dissimilar materials throughout.

3.3 INSTALLATION

A. Locate piping as shown on Drawings.

B. Pitch water lines 1-inch in 40-feet in the direction of flow; provide low points with drain plugs.

C. Route piping in an orderly manner and maintain gradient.

D. Install piping to conserve building space and not interfere with use of space.

E. Group piping whenever practical at common elevations.

F. Install piping to allow for expansion and contraction without stressing pipe, joints, or connected equipment.

G. Provide clearance for installation of insulation and access to valves and fittings.

H. Install per manufacturer's recommendations.

3.4 PIPE SUPPORTS AND HANGERS

A. Do not use bolts of pipe flanges, equipment, etc. for anchoring pipe supports. Adequately support piping systems to prevent strain on pump heads, valves, fittings, and equipment.

B. Support Spacing: Maximum distance between pipe supports as set out below unless otherwise indicated on Drawings:

C.

	Maximum Distance Between Support Points		
	FRP	*DIP, SST, STL*	*PVC*
Up to ¾-inch Diameter	-	6'6"	4'
1-inch to 1 ½-inches	-	10'	5'
2-inches to 3-inches	-	15'	6'
3-inches to 4-inches	-	15'	-
5-inches to 8-inches	8'6"	15'	-

* Spacings above are for specific gravity of 1.0; reduce spacings for greater specific gravities. Reduce spacings to 50 percent of above where valves occur in lines. Actual spacing to depend on pipe size and special loading conditions.

D. Support pipes within 12-inches of an elbow or tee.

E. Install pipe hangers vertical and true.

F. Provide properly sized galvanized insulation shields where insulated pipe passes through hangers.

3.5 FLANGED JOINTS

A. Tighten flange bolts so that gasket is uniformly compressed and sealed.

B. Do not distort flanges.

C. Leave flange bolts projecting no more than ½-inch or no less than ¼-inch.

D. Bolts shall be no more than 1/8-inch less than the diameter of the hole.

E. Provide flanges at connections to equipment, valves, and instruments.

3.6 UNIONS

A. On threaded and solvent welded lines, provide unions at connections to equipment, valves, and instruments.

B. Spacing of unions not to exceed 40-feet measured along the centerline of the pipe.

3.7 GALVANIC CORROSION

A. Provide dielectric unions at interconnections between fittings of dissimilar materials.

3.8 TOLERANCES

A. Maximum Variation from Plumb: ½-inch in 10-feet.

B. Maximum Offset from True Alignment: ½-inch.

3.9 FIELD QUALITY CONTROL

A. Hydrostatic Testing:

1. Test in accordance with ASME 31.1.

2. Check test equipment before applying test.

3. Test with clean water.

4. Purge air pockets while components or system is filling.

5. Test at 1.5 times the design pressure.

6. Hold test pressure for minimum 10 minutes.

7. Reduce pressure to design pressure and examine for leakage. Hold design pressure for minimum 8 hours.

8. Repair leaks and repeat test and design pressure testing sequence.

3.10 ADJUSTING

A. Adjust pipe hangers and supports as required.

3.11 CLEANING

A. Clean piping and fittings prior to painting.

3.12 PIPE CODING

A. Painting of piping and other materials is specified in Section 09900.

B. Color Coding Labels:

1. Process Piping:

Type of Piping	*Background Color*	*Lettering*
Groundwater (GW)	Light Brown	Black
Potable Water	Dark Blue	Black

2. Band Color Codes:

Dangerous Materials	Yellow
Safe Materials	Green
Protective Materials	Blue
Fire Protection	Red

C. Mark lines by using the proper paint or adhesive color tape located in conspicuous locations along each line at a maximum distance of 8-feet apart with identification lettering applied to the background color.

D. Apply arrows indicating the direction of flow and maximum operating pressure for pressure piping.

E. Lettering and marking size shall be in proportion to the size of lines to be coded.

F. Valves shall be tagged as required by the specifications.

END OF SECTION

SECTION 16075

ELECTRICAL IDENTIFICATION

PART 1 - GENERAL

1.01 SECTION INCLUDES

A. This section includes minimum requirements for the project electrical identification means in all project locations as shown on the drawings and as specified herein. This shall include equipment and device nameplates and labels, wire and cable markers, and the underground wiring warning tape.

1.02 RELATED SECTIONS

A. The following sections relate to this section Work:

1. Section 16005 – Electrical Installation.
2. Section 16010 – Electrical Conditions.
3. Section 16060 – Grounding and Bonding.
4. Section 16070 – Electrical Hangers and Supports.
5. Section 16075 – Electrical Identification.
6. Section 16110 – Conduit.
7. Section 16120 – Wire and Cable.
8. Section 16140 – Wiring Devices.
9. Section 16160 – Lighting Panelboards.
10. Section 16265 – 480V Adjustable Speed Drives.
11. Section 16405 – Utility Services.
12. Section 16500 – Lighting.
13. Section 16680 – Surge Protection.

1.03 REFERENCES

A. CONTRACTOR'S Work shall comply with the latest requirements of all applicable codes, standards, guides, practices and local regulations pertaining to the job at the time of bidding, and it shall carry approval labels where required. As a minimum, the following shall apply:

1. ANSI/NFPA 70 – National Electrical Code.
2. NFPA 70E – Standard for Electrical Safety in the Workplace.
3. ANSI/IEEE C2 – National Electrical Safety Code.

4. OSHA CER 1910, Subpart S – Electrical General, Parts 1 & 2.

1.04 SUBMITTALS FOR REVIEW

A. CONTRACTOR shall submit, for approval, catalog cuts for all wire, cable, markers, and underground warning tape proposed for this section Work.

B. CONTRACTOR shall submit identification nameplate and label legends, for approval, with the equipment shop drawing submittals which pertain to the other sections work (reference Related Sections).

PART 2 PRODUCTS

2.01 NAMEPLATES AND LABELS

A. Nameplates: Engraved 3-layer laminated plastic, black letters on white background. This shall be provided for all electrical equipment and device enclosures (if not furnished by the equipment supplier). The nameplates shall have 1/4-inch letters for identifying individual equipment and loads, 1/2-inch letters for identifying grouped equipment and loads.

B. Labels: Embossed adhesive tape, with 3/16-inch white letters on black background. Use only for identification of individual wall switches and receptacles, and control device stations.

2.02 WIRE MARKERS

A. Tubing type wire marker with typed in legend. The markers shall be by Thomas and Betts. Other acceptable manufacturers shall be Burndy, Panduit, or 3M Electrical Products.

B. Locations: Each conductor at panelboard gutters, outlet and junction boxes, control panels, and instruments.

C. Legend:

1. Power and Lighting Circuits: Branch circuit or feeder number as shown on the drawings.

2. Control and Instrumentation Circuits: Wire and circuit designation as indicated on the schematic and interconnection drawings.

2.03 UNDERGROUND WARNING TAPE

A. Underground warning tape as manufactured by LEM Products. Other acceptable manufactures shall be Thomas and Betts and 3M Electrical Products.

B. Tape Description: 6-inch wide plastic tape, detectable type, colored red, with warning legend "BURIED ELECTRICAL LINE BELOW."

PART 3 - EXECUTION

3.01 INSTALLATION – GENERAL REQUIREMENTS

A. Degrease and clean surfaces to receive nameplates and labels.

B. Install nameplates and labels parallel to equipment lines.

C. Secure nameplates to equipment front using stainless rust resistant screws.

D. Identify underground conduits using underground warning tape. Install one tape per trench at 6 inches below finished grade.

3.02 FIELD QUALITY CONTROL

A. Demonstration: On completion, demonstrate to ENGINEER that all project identification means have been supplied and installed as specified.

END OF SECTION

SECTION 16120

WIRE AND CABLE

PART 1 - GENERAL

1.01 SECTION INCLUDES

A. This section includes minimum requirements for the project wire and cable in all project locations as shown on the drawings and as specified herein. This shall include all project wire, cable, wiring identification, and terminations.

1.02 RELATED SECTIONS

A. The following sections relate to this section Work:

1. Section 16005 – Electrical Installation.
2. Section 16010 – Electrical Conditions.
3. Section 16060 – Grounding and Bonding.
4. Section 16070 – Electrical Hangers and Supports.
5. Section 16075 – Electrical Identification.
6. Section 16110 – Conduit.
7. Section 16120 – Wire and Cable.
8. Section 16140 – Wiring Devices.
9. Section 16160 – Lighting Panelboards.
10. Section 16265 – 480V Adjustable Speed Drives.
11. Section 16405 – Utility Services.
12. Section 16500 – Lighting.
13. Section 16680 – Surge Protection.

1.03 REFERENCES

A. CONTRACTOR'S Work shall comply with the latest requirements of all applicable codes, standards, guides, practices and local regulations pertaining to the job at the time of bidding, and it shall carry approval labels where required. As a minimum, the following shall apply:

1. ANSI/NFPA 70 – National Electrical Code.
2. NFPA 70E – Standard for Electrical Safety in the Workplace.
3. ANSI/IEEE C2 – National Electrical Safety Code.
4. OSHA CER 1910, Subpart S – Electrical General, Parts 1 & 2.

5. Underwriters Laboratories Inc. (UL).

1.04 SUBMITTALS FOR REVIEW

A. CONTRACTOR shall submit, for approval, catalog cuts for all wire and cable proposed for this section Work.

B. CONTRACTOR shall submit, for approval, all revised Contract Drawings showing revised wiring routing and wire sizes as specified in Section 16010, Electrical Conditions.

C. CONTRACTOR shall submit, for approval, all required interconnecting wiring termination drawings as specified in Section 16010, Electrical Conditions.

1.05 SUBMITTALS FOR CLOSEOUT

A. On completion, CONTRACTOR shall submit, for approval, accurately completed project Record Drawing showing actual location, routing and termination details of all wire and cable work.

PART 2 – PRODUCTS

2.01 MATERIAL - GENERAL REQUIREMENTS

A. All wire, cable and terminations for the project shall be NEC compliant, UL-approved product.

2.02 HIGH VOLTAGE POWER CABLE

A. Description: NEC MV type, single-conductor, 175 mil 100% insulated, copper tape shielded cable for use in aerial, direct burial, conduit and underground duct installations.

B. Conductor: Class B stranded, soft or annealed copper, sizes as shown on the drawings.

C. Voltage Rating: 15KV.

D. Insulation: EPR.

E. Temperature Rating: 90 degrees C.

F. Overall Jacket: Black sunlight resistant PVC.

G. Approved Manufacturer (s): Southwire or approved equal.

2.03 LOW VOLTAGE POWER AND CONTROL CABLE

A. Description: NEC general wiring type, single-conductor cable.

B. Conductor: Class B stranded, annealed copper, sizes as shown on the drawings.

C. Voltage Rating: 600 volts.

D. Insulation: 75 /90 degrees C, THHN/THWN type (above ground) and XHHW type (below ground).

E. Approved Manufacturer (s): General Cable, Okonite, Southwire, or approved equal.

2.04 INSTRUMENTATION CABLE

A. Analog Cable: 600V, 16AWG copper twisted shielded pair with overall PVC jacket, Belden 9342.

B. Digital Cable: 600V, 16AWG copper twisted unshielded pair with overall PVC jacket, Belden 9487.

2.05 HIGH VOLTAGE CABLE TERMINATIONS

A. All high voltage shielded cable terminations at the transformers, shall be made with Cooper Power Systems or 3M 15kV, 200A rated loadbreak elbow connectors.

B. All high voltage shielded cable terminations at the 13.2kV main switchgear and 13.2kV pad-mounted switches shall be made with Raychem TFT-E or approved equal 15kV-rated stress relief connectors.

2.06 LOW VOLTAGE WIRING CONNECTORS

A. All 480 V power terminations at motors and buswork shall be made with Burndy two-hole “Hylug” or approved equal compression type connectors.

B. All instrumentation wiring terminating at screw type terminals shall be made with Thomas & Betts “Sta-Kon” or approved equal insulated “fork-type” spring connectors.

PART 3 EXECUTION

3.01 GENERAL REQUIREMENTS

A. The wire and cable quantity and sizes, as shown on the Contract Drawings shall not be considered absolute. This information, as indicated on the Contract Drawings or in this specification, is based on preliminary engineering data available to ENGINEER during preparation of the Contract Documents. CONTRACTOR shall completely revise the Contract Drawings, as specified in Section 16010, Electrical Conditions and based on the equipment data and actual field conditions, and furnish all necessary project wire and cable as required.

3.02 INSTALLATION – GUIDELINES

A. The wire and cable installation shall include wire and cable handling, cutting, training, pulling, termination and testing.

B. All wiring and cable shall be enclosed in conduit, except temporary wiring installation, which shall comply with NEC requirements for temporary installations and as instructed by OWNER and /or by the local authority having jurisdiction.

C. All wiring shall be properly grounded, color-coded, phased and/or polarized throughout. The wiring color code shall be as follows:

1. AC Power and Lighting Wiring: Black phase markings in accordance with NEC.

2. AC Control Wiring: Red.

3. Ground: Green.

4. Instrumentation Analog and Digital Cable: Red (+), black (-).

D. No conductor shall be installed until the raceway system that contains it is complete.

E. Install wire and cable in accordance with manufacturer's instructions. Employ manufacturer recommended tools and installation methods. Never exceed manufacturer's recommended cable

bending radiuses and pull tensions. Pull all conductors into raceway at the same time. Use manufacturer recommended greaseless conductor pulling compound only.

F. All conductors shall be installed in continuous runs, from origin to equipment, without splices or joint unless specifically indicated on the Contract Drawings.

G. Cable splices, if any, and terminations shall carry full ampacity of conductors with no perceptible temperature rise.

H. All wire/cable terminations shall be made to terminal blocks, bus, or connectors in approved enclosures.

I. All conductors shall be installed and terminated without nicking the insulation.

J. Neatly train and lace wiring inside boxes, equipment, and panelboards.

K. All cables, cables conductors and wires shall be clearly identified with identification numbers, as indicated on the drawings, at all pull boxes, equipment and devices enclosures, and at the terminating points. Identify each cable, cable conductor, or wire by a marker at each terminating point in accordance with Section 16075, Electrical Identification. All identification letters and numbers shall be typed.

L. Wire pulled prior to the equipment setting, or completion of conduit termination, shall be protected from the environment and shall be neatly coiled and protected from damage.

M. Terminations:

1. All cable terminations shall be completed only after the cable checks and tests have been performed and found acceptable by ENGINEER.

2. Conducting surfaces of the cable terminating ends shall be thoroughly cleaned before applying connectors.

3. No more than two wires shall be terminated at any terminal. Wire twisting around the terminal will not be allowed.

N. Checkouts and Tests:

1. Prove all interconnecting cable and wire continuity and freedom from grounds and short circuit.

2. Ensure the equipment proper polarity and phasing, and that all conductors have been terminated at the correct terminals.

3. All power, control, and instrumentation wiring shall be tested. Cable, which fails the test, shall be promptly replaced at CONTRACTOR'S expense.

4. All underground cables shall be tested twice prior to and after backfill of the trenches.

5. All test results shall be documented and submitted to ENGINEER for review and comments, and shall later become a part of the as-built documents.

6. The high voltage cable shall be given manufacturer's recommended high voltage test.

7. The low voltage cable tests shall be performed with a digital insulation and continuity tester (AVO INTERNATIONAL Megger BM80 or approved equal) as follows:

a. All 480V power and motor feeders shall be 1000 VDC megger tested. Record lowest readings. Reference insulation resistance numbers shall be obtained from the cable manufacturer.

b. Instrumentation cable shall be checked for continuity only (disconnect all associated surge protective devices during the test).

O. Phasing:

1. The entire electrical system shall be properly phased-out by CONTRACTOR, so that all three-phase transformers, motor control center, distribution panels, disconnects, power outlets, etc., are identical in phase relationship.

2. The phasing shall be of A-B-C sequence, left to right, top to bottom, front to back.

3.03 DEBRIS

A. During cable installation, at the end of each day, CONTRACTOR shall ensure that cable cuttings and other cable waste are deposited into a trash container to avoid any debris left in the work area, and in the equipment enclosures.

3.04 DAILY RUNNING RECORD

A. CONTRACTOR shall keep a daily running record of cables pulled and terminated, and it should be available for ENGINEER'S periodic inspection.

3.05 FIELD QUALITY CONTROL

A. On completion, CONTRACTOR shall demonstrate to ENGINEER that all project wire and cable has been installed as specified.

END OF SECTION

SECTION 16140

WIRING DEVICES

PART 1 - GENERAL

1.01 SCOPE

A. This Section covers minimum requirements for miscellaneous wiring devices furnished by the CONTRACTOR.

B. The miscellaneous wiring devices shall include, but not be limited to: convenience receptacles, GFCI convenience receptacles, locking receptacles, and plugs.

C. All receptacles shall be supplied and installed complete with all necessary accessories such as boxes (enclosures), cover plates, and supports.

D. Refer to the Contract Drawings for additional requirements.

1.01 SUBMITTAL

A. For Approval

1. Submit Manufacturer's data (i.e., catalog cut sheets) for each type of device supplied.

PART 2 - PRODUCT

2.01 GENERAL

A. Each device shall be UL listed and bear a label or imprinted mark stating so.

B. Furnish devices as manufactured by: Hubbell; Leviton; Pass & Seymour/Legrand; or equal.

2.01 CONVENIENCE RECEPTACLES

A. Straight Blade Duplex Receptacle

1. 125VAC rating.

2. 15 Ampere.

3. 2 pole, 3 wire, U ground slot.

4. Industrial Specification Grade.

5. Side wired.

6. Ivory color (except where wall finish is wood or dark in color, then use brown).

7. Leviton Model #5242-I or equal.

2.01 GFCI CONVENIENCE RECEPTACLES

A. Straight Blade GFCI Duplex Receptacle

1. 125VAC rating.

2. 15 Ampere.

3. 2 pole, 3 wire, U ground slot.

4. Commercial Specification Grade.

5. Side wired.

6. Test and Reset buttons.

7. Device operation to automatically lockout if ground continuity is absent.

8. Leviton Model #8599-I or equal.

2.01 LOCKING RECEPTACLES

A. When indicated on the Contract Drawings, a locking plug and receptacle shall be utilized as a means of isolating small building service loads (i.e. electric unit heaters, high bay light fixtures, etc.) or small pieces of process equipment (i.e. metering pumps, chlorinators, etc.).

B. Receptacle

1. Unless noted otherwise, utilize single (as opposed to duplex) receptacle devices.

2. Each device to include one (1) grounding contact.

3. Standard NEMA rating and configuration.

4. Industrial Specification Grade.

5. Leviton or equal.

2.01 PLUGS

A. Locking Plugs

1. Each device to include one (1) grounding pin.

2. Standard NEMA rating and configuration.

3. Industrial Specification Grade.

4. Device supplier to include a length, minimum 1’-6” ± (18” nominal) and maximum 4’-0” ± (48” nominal), of extra flexible cable to interconnect the device and the piece of equipment.

5. Leviton or equal.

2.01 COVER PLATES

A. Recessed Box(es)

1. Commercial grade molded nylon wall plates to match color of receptacle.

B. Surface Mounted Box(es)

1. Commercial grade stamped Type 430 stainless steel complete with rounded or beveled edges.

C. Weatherproof Surface Mounted Box(es)

1. Commercial specification grade self-closing clear plastic cover which maintains the rain tight status even when the receptacle is in use.

2. Covers utilized in exterior applications shall also be padlockable.

PART 3 - EXECUTION

3.01 INSTALLATION

A. Unless noted otherwise on the Contract Drawings:

1. Mount convenience receptacles 1’-6”± (18” nominal) above the finished floor (A.F.F.).

2. Mount locking receptacles, utilized as equipment disconnects, at:

a. 2’-0” ± (24” nominal) above the finished floor for floor mounted equipment.

b. 6’-0” ± (72” nominal) above the finished floor for ceiling mounted equipment.

3. Mount devices vertically with the ground pole on the bottom.

END OF SECTION

SECTION 16265

480VAC VARIABLE FREQUENCY DRIVES

PART 1 GENERAL

1.01 SCOPE

A. This Section covers minimum requirements for low voltage (600V or less) Variable Frequency Drives (VFDs) furnished by the CONTRACTOR. Unit(s) shall be utilized to power AC electric motors for sewage pumps.

B. The drive manufacturer shall have a minimum of ten (10) continuous years of experience in the production and application of this type of equipment in the specified process field.

C. All necessary equipment, whether specified or not, shall be furnished and properly coordinated in accordance with the intent of this Specification. The vertical pump supplier shall be responsible for the proper function of all components. Any item, material, or detail not specified or indicated on the Contract Drawings shall be determined by the vertical pump manufacturer and shall be subject to approval.

1.02 QUALITY ASSURANCE

A. The drive manufacturing facility shall be ISO 9001 certified.

1.03 SUBMITTAL

A. For Approval

1. Submit manufacturer's standard data (i.e., catalog cut sheets) for each type of unit supplied.

2. A minimum of one (1) job specific layout drawing per unit type or rating complete with dimensions, total weight, shipping splits (if required), and material list.

3. Unit front face (operator interface) layout complete with devices.

4. Elementary diagrams complete with internal and external (field) wiring information.

5. Engineering data to prove compliance with IEEE Standard 519 Guide for Harmonic Control and Reactive Compensation for Static Power Converters. Include project specific analysis indicating total harmonic voltage distortion.

6. The name, address, and telephone number of a local (within 150 miles or less) factory authorized service organization.

a. Include a signed statement indicating the maximum time required to have a factory trained service technician on Site after telephone notification of an equipment malfunction.

b. Include a signed statement indicating that standard replacement parts can be obtained, shipped, and delivered to the OWNER within 24 hours of a written request.

1.04 GUARANTEE

A. Each VFD unit shall be guaranteed to be free from defects in materials and workmanship for a minimum period of twelve (12) months from the date of certified start-up and acceptance by the OWNER. The guarantee shall include all parts, field and shop labor, travel time, and expenses.

B. The above general guarantee shall not act as a waiver of any original equipment manufacturers (OEM) warranty of greater length in time.

PART 2 PRODUCT

2.01 GENERAL

A. Each unit shall be:

1. UL listed and bear a label stating so.

2. Manufacturer's standard rating.

3. Permanently labeled with a Model number and a unique Serial number.

4. Manufactured and installed in accordance with the latest issue of ANSI, NEMA, IEEE, and NEC standards.

B. Site Conditions

1. Continuously operating (24-hours per day, 7-days per week) municipal wastewater facilities.

2. Non-hazardous industrial environment (damp, humid, dust, and dirt).

3. Indoor temperature range of 0-degree C (32-degrees F) to 40-degrees C (104-degrees F) and relative humidity 0 percent to 95 percent.

4. Elevation below 1,000 meters (3,300 feet) above sea level.

5. System Voltage

a. 480/277 VAC -10% +5% (432 to 504 volts AC).

b. 3 Phase.

c. 4 Wire.

d. 60 Hertz +/- 1 Hertz.

C. Motor Data

1. Unless noted otherwise or required by the process, each VFD shall be fully capable of operating any standard 460VAC three phase NEMA B squirrel cage induction motor.

2. The motor shall be energy efficient (premium).

2.02 FABRICATION

A. Enclosure

1. Each drive shall be open chassis for field mounting within an existing enclosure.

2. Each unit shall be vibration resistant.

3. Each unit shall be electro-magnetic interference (EMI) resistant.

B. Electrical

1. In multiple drive applications, each unit shall be fed incoming AC power from a common bus. Power distribution shall be supplied via a distribution panelboard.

2. Each drive shall include an incoming power disconnect device. The device shall provide unit overload protection and unit short circuit protection. The device shall be fused.

3. Each drive shall have a symmetrical short circuit current rating equal to or greater than the rating of the feeder circuit breaker and distribution switchboard.

4. A separately mounted incoming power isolation transformers shall be furnished; if required because of power quality.

5. Units shall not be affected by (insensitive to) incoming AC power phase rotation.

6. Each drive shall utilize a full wave rectifier, DC bus filter, and, unless noted otherwise, a pulse width modulating (PWM) inverter.

7. Each unit shall be the manufacturers commonly produced solid state, microprocessor based, fully digital system utilizing surface mounted devices and modular construction. All control components shall be physically and electrically isolated from the power circuits.

8. No external sources of internal control power will be provided. Each drive shall include a 120 VAC control power transformer (CPT) with both primaries fused, one secondary fused, and one secondary grounded. Also, if necessary, a +24VDC power supply shall be included.

9. Internal wiring shall be 600V copper MTW. Minimum #14 AWG for power and #16 AWG for 120 VAC control. Provide plastic sleeve wire labels on both ends of each conductor. All ground conductor insulation shall be green and all external source interlocks shall be yellow.

10. Drive supplier shall guarantee that each unit, as measured at the drive incoming power terminals, shall not contribute more than 5 percent total harmonic distortion (THD) and 3 percent single harmonic distortion per IEEE 519 to the existing power distribution system. If the drive supplier determines that an AC input line reactor and/or filter is required, the reactor shall be furnished by the drive supplier and shall be mounted within the drive enclosure.

11. Internal Drive Protection:

    a. Incoming power over voltage.

    b. Incoming power under voltage.

    c. Incoming power phase loss.

    d. Instantaneous overcurrent.

e. Inverse time current.

f. Over temperature.

g. Over frequency.

h. Under frequency.

12. Drive supplier shall note the distance (or motor lead length) between the VFD and the motor. If deemed necessary by the drive supplier to avoid nuisance trips due to capacitive current flow to ground, furnish an output line reactor and/or output line filter for each VFD.

C. Performance

1. A 97 percent or better efficiency at base speed and 100 percent load. The efficiency at 50 percent of base speed shall be 95 percent or better.

2. A 0.95 lagging or better power factor at all operating speeds. Unless noted otherwise, the unit shall not exceed a unity power factor.

3. Maintain speed control, regardless of load, within ±1.0 percent of motor base speed.

D. Capabilities

1. Unit shall be able to start, without tripping, into a rotating (forward or reverse) load.

2. Constant (high) torque starting mode with automatic adjustment to variable (running) torque.

3. Each unit shall be an AC/DC/AC converter utilizing isolated gate bipolar transistor (IGBT) technology. Drives shall have an optional mode for scalar or Volts/Hertz operation. In the V/H operating mode, each drive shall be capable of maintaining a constant volts-to-hertz ratio throughout the speed range.

4. Drive output current (Io) overload capacity shall be 150 percent of the normal rated current for one minute out of every ten minutes and 200 percent for two seconds out of every fifteen (15) seconds. Unit(s) shall include instantaneous overcurrent trip at 350 percent of normal rated current. All values shall be easily field adjustable.

5. Output frequency shall be easily field adjustable between zero and three hundred Hertz.

6. Starting and running slip compensation shall be available.

7. Unit shall be capable of no-load operation during maintenance.

8. Unit shall be capable of continuous operation at full rated current and load within the Site Conditions stated in this Technical Specification Section. Each drive shall be self-adjusting to incoming AC power fluctuations. Fluctuations within this range shall cause no interruption of drive operation.

9. Provide motor protection:

a. Solid state field adjustment thermal overload.

b. Critical speed lockout.

c. Phase-to-phase short-circuit.

d. Phase-to-ground short-circuit.

10. Perform an orderly and non-component damaging shutdown upon internal fault or loss of incoming power.

11. Ability to ride through a 30-cycle (or 0.5 second) local electric utility company power outage. Include a power loss ride through feature that will allow the drive to remain fully operational after losing power as long as kinetic energy can be recovered from the rotating mass of the motor and load.

12. Unit(s) shall have an automatic energy optimization option to adjust the volts-to-hertz ratio for minimum energy consumption while maintaining the load requirements.

2.03 INTERFACE

A. Local Operator Interface

1. Each unit shall include a lamacoid nameplate (black lettering on a white background) identifying OWNER'S designation (i.e., Pump No. 1 VFD). Anchoring method shall not void the integrity (NEMA rating) of the enclosure. Minimum size shall be 3 inch by 6 inch.

2. Unless noted otherwise, each VFD shall include a front mounted Operator Control Panel (OCP) consisting of a four line by twenty-character backlit alphanumeric display and a keypad with Run/Stop, Local/Remote, Increase/Decrease, menu navigation, and parameter Select/Save pushbuttons. This keypad and display shall be able to perform all programming and configuration functions for each individual drive unit.

a. All parameter names, fault messages, warnings, and all other information shall be displayed in simple complete plain English words or standard English abbreviations to allow the user to understand what is being displayed without the use of a manual or cross-reference table (coded messages are not acceptable).

b. Each OCP shall be capable of uploading drive parameter settings to non-volatile OCP memory and downloading drive parameter settings from non-volatile OCP memory to the same drive or to another similar drive OCP.

c. The display capabilities shall include, but not be limited to:

1) Output voltage, current, frequency, or torque.

2) Output speed in RPMs, % of total, or other engineered units.

3) Input voltage, power (kW), or energy (kWh).

4) Internal drive heatsink temperature (in % of unit trip).

5) Status of discrete inputs and outputs.

6) Values of analog input and output signals.

7) Values of PID controller references, feedback loops, and error signals.

d. During normal drive operation, one line of the OCP display shall indicate the speed reference, the run/stop status, and the local/remote status. The remaining three lines

e. Provide lockout capabilities to prevent unwanted programming. Lockout must not inhibit Local/Remote selection or manual operation.

f. Loss of incoming AC power or drive internal control power shall not necessitate a reloading of any drive parameters and/or configuration. The local operator interface as well as the entire drive shall automatically reset and be ready for continued operation upon return of power.

g. Each OCP shall include capabilities to increase/decrease the motor speed when the VFD is in local or "HAND" mode.

3. Include a non-resettable elapsed running time meter (ETM).

B. External Interface

1. Hardwired Inputs

a. Include three (3) independently programmable analog inputs with easily field selectable functions. One (1) shall be 0 – 10 VAC and two (2) shall be 4 – 20 mA DC. Provide input isolation for each. Processing functions shall include scaling adjustment, adjustable filtering, and signal inversion. One input will typically be utilized for speed reference from a central control system.

b. If the speed input reference is lost, the drive shall be field adjustable to stop and alarm a fault locally and to the central control system or to continue operating at a predetermined field adjustable speed and alarm a fault locally and to the central control system.

c. Include six (6) independently programmable discrete inputs with easily field selectable functions. Each input is intended for use as a dry contact with either an internal or external control power source. One input may typically be utilized as a Run/stop signal (115 VAC) and another may be utilized as an External Stop (115 VAC; normally closed safety device).

2. Hardwired Outputs

a. Include two (2) analog outputs that shall provide 4 – 20 mA DC signals. Outputs shall be independently programmable to provide proportional signals to easily field selectable functions such as drive output speed, frequency, current, or power.

b. Include three (3) form C independently programmable relay contact outputs with easily field selectable functions. Relay contacts shall be rated 8 amps at 250 VDC. General and specific warning and fault indications shall be available. One output may typically be utilized as a Drive Fault (115 VAC) signal and another may be used as a Drive Running (115 VAC) signal to a central control system.

3. All inputs and outputs shall be wired to terminal blocks for connection to field wiring.

4. Network Communication

a. A RS485 serial port connection shall be provided for network communication purposes. Each unit shall communicate with the proposed local control panel (LCP).

b. A remote input/output interface board shall be furnished to allow connection to other equipment. All drive parameters, operation programming, monitoring, and diagnostic functions shall be available via the serial link.

c. Unless specified otherwise or required for the application, MODBUS protocol shall be provided to allow direct communication with other drives and programmable logic controllers (PLCs). Each individual drive shall be addressable for serial network communication purposes.

C. Operate Selected Parameters

1. The following easily field adjustable operator selected parameters shall be included, at a minimum.

a. Preset output speed selection (if reference signal is lost).

b. Minimum output speed (20 to 60 percent of nominal rated speed).

c. Maximum output speed (100 to 110 percent of nominal rated speed).

d. Linear acceleration and declaration rates (1.0 to 90 seconds).

e. Output torque boost.

f. Running output current limit (up to 110% of full load current).

g. Frequency avoidance band (at least one).

h. Automatically attempt to restart after an internal fault or an external incoming power failure (on or off option).

i. Number of auto restart attempts (at least three).

j. Time delay between auto restart attempts (1-30 seconds).

2.04 MANUFACTURERS

A. Provide unit(s) as manufactured by:

1. Allen-Bradley, A Division of Rockwell Automation, Powerflex 40 Series.

2. Or equal.

PART 3 EXECUTION

3.01 SHIPPING

A. Unit(s) shall be handled and stored in accordance with the manufacturers written instructions.

3.02 FIELD INSTALLATION

A. Each unit shall be securely fastened to the existing enclosure utilizing appropriate anchors, nuts, and bolts. Unit enclosures shall not be field welded in any fashion.

B. The unit shall be mounted with the highest operator device no more than 5 feet 6inches above the finished floor.

C. Each unit shall be properly grounded per the NEC.

D. Close, using proper seals, all unused openings and/or penetrations to maintain the enclosure NEMA rating.

3.03 COMMISSIONING

A. The CONTRACTOR who supplied the unit shall be responsible for proving correct operation, under all possible conditions, to the OWNER.

B. Upon completion of the commissioning, the supplier shall furnish, within the O & M Manual, a complete set of “As-Installed” schematics and wiring diagrams for each type of unit.

3.04 TRAINING

A. The drive supplier shall provide a factory trained technician to conduct a one (1) normal 8-hour workday training session for up to six (6) of the OWNER'S representatives. The session will be conducted at the OWNER'S designated site and shall consist of instruction on the proper operation and maintenance of the equipment.

B. The drive supplier shall furnish all instruction material (one per OWNER representative plus two spares) to conduct the session. Upon completion of the training, all instructional material shall become the property of the OWNER.

3.05 FINAL PAYMENT

A. The CONTRACTOR shall not receive final payment under this Contract until:

1. The complete O & M Manual, including As-Builts, is received, reviewed, and accepted by the OWNER.

2. All training is complete.

END OF SECTION

SECTION 16680

SURGE PROTECTION

PART 1 - GENERAL

1.01 SCOPE

A. This Section covers minimum requirements for transient voltage surge suppressors (TVSS) furnished either by Vendors, as part of pre-packaged equipment, or by installation CONTRACTORS.

B. All surge protection units for this Work shall be from a single manufacturer. All surge protection devices for this Work shall be from a single manufacturer. Units and devices need not be from the same manufacturer.

C. For electrical power systems that include multiple application points of surge protection units, the unit supplier shall be responsible for overall surge protection coordination.

1.02 SUBMITTAL

A. For Approval

1. Submit Manufacturer's data (i.e., catalog cut sheets) for each type of unit or device to be supplied.

PART 2 - PRODUCT

2.01 GENERAL

A. Each unit or device shall be UL listed and bear a label stating so.

B. Each unit or device shall include, at a minimum:

1. Surge arrestor.

2. EMI/RFI filter.

3. Voltage clamp.

4. Single point grounding.

5. Normal mode protection (L-N).

6. Common mode protection (L-G & N-G).

7. Industrial grade.

8. LED indication of phase protection functioning.

9. Push-to-test function to verify unit is operating properly.

10. Capability to handle 110% of the nominal system operating voltage.

2.02 SECONDARY POWER SURGE SUPPRESSORS

A. Unit enclosure shall be as indicated on the Contract Drawings or in other sections of this Specification. In general, units mounted within a control panel or within a panelboard shall be NEMA 1; units that service panelboards but are mounted externally shall match the panelboard enclosure NEMA rating; and units mounted outdoors shall be NEMA 3R.

B. Each unit shall be manufactured to UL Standard 1449 Second Edition.

C. Each unit shall contain:

1. At least one (1) non-linear component.

2. Easily field replaceable components (modular design).

3. Surge current diversion paths for all modes of protection.

4. Easily field replaceable surge rated fuses for each mode.

D. Provide unit(s) as manufactured by:

1. Advanced Protection Technologies, Inc. TE Series.

2. MCG Surge Protection XT or M Series.

3. Or equal.

2.03 TVSS RECEPTACLES

A. Individual 120VAC, 60HZ, 20A duplex receptacle complete with integral suppressor.

B. Provide device(s) as manufactured by:

1. Leviton Model 5380.

2. Or equal.

PART 3 - EXECUTION

3.01 INSTALLATION

A. Each unit or device shall be interconnected to a dedicated multi-pole circuit breaker.

B. Where indicated, furnish surge protection at motor control centers (MCC), at distribution switchboards (DSB), and at distribution (DP), lighting (LP), and/or power (PP) panelboards. For new equipment applications, surge protection unit may be internally mounted (integral to the equipment enclosure). Where new surge protection is being added to existing equipment (retrofit applications), unit shall typically be separately mounted.

C. Where indicated, furnish surge protection within control panels containing solid state electronic equipment such as programmable logic controllers (PLCs) and SCADA remote terminal units (RTUs).

D. Where indicated, furnish surge protected duplex receptacles for portable electronic equipment such as personal computers (PCs).

E. Install all units per the manufacturer's recommendations (i.e. suppression device feeder breaker sizing, etc.). For externally mounted units, minimize the distance between the circuit breaker and the unit.

F. Properly ground all surge protection devices.

G. The supplier of the unit or device shall be responsible for power, control, and grounding interconnection.

END OF SECTION

SECTION 17420

INSTRUMENTS

PART 1 GENERAL

1.1 SECTION INCLUDES

A. Level Transmitter

B. Differential Pressure level transmitter

C. Float level switch

D. Magnetic water flow transmitter

E. Float level control

F. Pressure Indicating Gauge

1.2 REFERENCES

A. Section 01400 – References: Requirements for References.

B. National Electrical Manufacturers Association (NEMA).

C. National Fire Protection Association, Inc. (NFPA): 70 – National Electrical Code.

D. Underwriters Laboratories Inc. (UL).

1.3 ALLOWANCES

A. Allowances shall be made for the number of days of commissioning or supervision required for installation and startup at the time of bid with no additional payment for startup or commissioning.

1.4 REGULATORY REQUIREMENTS

A. Conform to NFPA 70.

B. Furnish products listed and classified by UL as suitable for purpose specified and shown.

1.5 PROGRESS SUBMITTALS

A. Section 01300 – Submittal Procedures: Requirements for progress submittals.

B. Shop Drawings: Indicate operating data, system drawings, wiring diagrams, and written detailed description of operation.

C. Product Data: Include manufacturer's product and engineering data for each instrument. Include ranges, materials, and dimensions.

D. Test Reports: Include calibration reports.

E. Manufacturer's Instructions: Indicate application conditions and limitations of use. Include instructions for storage, handling, preparation, installation, and setup of product.

F. Instrumentation Specification: The project instrumentation requirements are listed on Attachment 1, Instrument List. The following project instrumentation requirements, shall be completed by the CONTRACTOR.

1. Complete review and update of all project instrumentation as specified in Section 17420.

2. Determine and submit for approval, final manufacture's instrument part number to satisfy all installation, specification and functional requirements.

3. Before procurement, submit all required instrument documentation to ENGINEER for review and approval. As a minimum, this shall include specific manufactures equipment part number, equipment cut sheets, equipment manufacturer's drawings, installation and operation manuals, equipment and installation test reports and the like.

1.6 CLOSEOUT SUBMITTALS

A. Section 01700 – Closeout Procedures.

B. Record Documents: Indicate actual locations of instruments. Include actual setpoints, analog signal spans, and programming setpoints data.

C. Operation and Maintenance Data: Include bound copies of operating and programming instructions, adjustments, and preventative maintenance procedures and materials. Provide manufacturer's technical operation and maintenance manuals. Provide six complete copies of the operating and maintenance instructions, including parts lists for all of the equipment. One copy to be single sided for production of additional operation and maintenance manuals. Bind material in sections in hard backed binders.

1.7 QUALIFICATIONS

A. Installer: Company specializing in performing the work of this Section with minimum three years documented experience.

1.8 DELIVERY, STORAGE, AND HANDLING

A. Section 01600 - Product Requirements: Requirements for transporting, handling, storing, and protecting products.

B. Accept instruments on the Site in factory containers. Inspect for damage.

C. Store products in clean and dry area.

1.9 SYSTEM STARTUP AND COMMISSIONING

A. Section 01700 - Closeout Procedures: Requirements for commissioning.

B. Provide instrumentation calibration, field configuration, documentation, startup and commissioning support for all instrumentation testing and integration.

C. Provide technical support for staff training for a minimum of one day after equipment commissioning.

1.10 MAINTENANCE MATERIALS

A. Section 01700 – Closeout Procedures: Requirements for maintenance materials.

B. Furnish 1 set of calibration accessories for the humidity transmitters.

PART 2 PRODUCTS

2.1 INSTRUMENT LIST

A. Appended to this Section is Attachment 1, Instrument List, which tabulates the instruments that form part of the work. Use this list in conjunction with Drawings.

2.2 LEVEL TRANSMITTER

A. Submersible Hydrostatic Level Probe as manufactured by Sitron-USA, Inc (HL840) or approved equal.

B. Model: As per Instrument List.

C. Sensor: 316SS (Silicone Filled) Piezoresistive Diagram

D. Cable Length: (per well), Polyurethane & Kevlar Lined w/ vent tube.

E. Power Supply: 24 VDC Loop powered.

F. Pressure Cell calibrated per well, accuracy 0.5%

2.3 Differential Pressure LEVEL TRANSMITTER

A. Differential pressure level transmitter as manufactured by Rosemount (2051C D 2A 2 2 A 1 A B4M5) or approved equal.

B. Model: As per Instrument List.

C. Power Supply: 24 VDC loop.

D. Output: 4-20 mA.

E. Enclosure: Local LCD display. NEMA 4X.

F. Mountings: NPT 1/2” thread process connection

2.4 FLOAT LEVEL SWITCH

A. Polypropylene float with cord and mechanical switch as manufactured by SJE-Rhombus (Milliamp Master Control Switch) or approved equal.

B. Model: As per Instrument List

C. Output: 1 NC switch, wired as per schematics.

D. Mounting: Externally weighted

2.5 MAGNETIC WATER FLOWMETERS

A. Pulsed magnetic flowmeter, flanged, Hastelloy electrodes, Polyurethane liner with transmitter and display; as manufactured by Endress & Hauser (Promag 50W) or approved equal.

B. Model: As per Instrument List, with integral indicator and transmitter.

C. POWER: 120 VAC

D. Output: 4-20 mA, configurable totalizer pulse.

E. Enclosure: NEMA 4X.

F. Accessories: Grounding rings, Stainless Steel.

2.6 FLOAT LEVEL CONTROL

A. Polypropylene float with cord and mechanical switch as manufactured by SJE-Rhombus (Milliamp Master Control Switch) or approved equal.

B. Output: 1 NO switch, wired as per schematics.

C. Mounting: Externally weighted

2.7 Pressure Indicating Gauge

A. Mechanical Bourdon tube Solid front gauge case design, 41⁄2″ diameter Dial Size as manufactured by Ashcroft Inc (Type 1279 Duragauge) or approved equal.

B. Model: As per Instrument List, with integral indicator and transmitter.

C. Micrometer adjustable pointer, Teflon-coated pinion, welded-tube construction

D. Hermetically sealed case: IP 65

E. Pump discharge service, Liquid-filled performance in a dry gauge

F. Process Connection 316 SS socket 1⁄2” NPT Lower

PART 3 EXECUTION

3.1 EXAMINATION

A. Section 01700 - Execution Requirements: Verification of existing conditions before starting work.

B. Verify that systems are ready to receive work.

C. Sequence works to ensure installation of components is complimentary to installation of similar components in other systems.

D. Coordinate installation of system components with installation of mechanical systems equipment.

3.2 INSTALLATION

A. Install equipment in accordance with manufacturer's written instructions, final Shop Drawings, Drawings, applicable standards, and with manufacturer or Supplier supervision as required.

B. Install instruments and their associated sensors to ensure easy access for maintenance, calibration, withdrawal, and replacement.

C. Calibrate, program, and setup all instruments as directed by the ENGINEER.

3.3 MANUFACTURER'S FIELD SERVICES

A. Section 01400 - Quality Requirements: Requirements for preparing and starting systems.

B. Provide manufacturer's representative to inspect magnetic water flow transmitters and ultrasonic level transmitters after installation, and submit report prior to startup, verifying installation and operation is in accordance with specifications and manufacturer's written instructions.

3.4 ADJUSTING

A. Section 01700 - Execution Requirements: Requirements for adjusting installed work.

B. Adjust instrument setpoints as directed by ENGINEER.

3.5 DEMONSTRATION

A. Section 01700 - Facility Operation: Requirements for demonstrating installed work.

B. Demonstrate operation of installed instrumentation.

3.6 PROTECTION OF FINISHED WORK

A. Section 01700 - Execution Requirements: Requirements for protecting installed work.

END OF SECTION

SECTION 17431

CONTROL PANELS

PART 1 GENERAL

1.1 SECTION INCLUDES

A. Control panels.

B. Automatic telephone dialer.

C. Uninterruptible power supply.

D. Enclosures.

E. Power Supply.

F. Ethernet network components.

1.2 REFERENCES

A. Section 01400 - Quality Requirements: Requirements for references.

B. National Electrical Manufacturers Association (NEMA):

1. ICS 1 - General Standards for Industrial Control Systems.

2. ICS 2 - Standards for Industrial Control Devices, Controllers, and Assemblies.

3. ICS 6 - Enclosures for Industrial Controls and Systems.

4. Standards Publication 250.

C. National Fire Protection Association, Inc. (NFPA): 70 - National Electrical Code.

D. Underwriters Laboratories Inc. (UL).

1.3 ALLOWANCES

A Allowances shall be made for the number of days of commissioning or supervision required for control panel and system installation and startup at the time of bid with no additional payment for startup or commissioning.

1.4 DRAWINGS AND DESIGN

A. Drawings, specifications, and tabulations do not purport to be complete in listing or indicating exact detail. Drawings are intended to show the intention of layout and operation.

B. Final placement of all internal and external panel components is CONTRACTOR's responsibility based on the guidelines provided by the equipment manufacturer.

1.5 REGULATORY REQUIREMENTS

A. Conform to NFPA 70.

B. Furnish products listed and classified by UL as suitable for purpose specified and shown.

1.6 PROGRESS SUBMITTALS

A. Section 01300 - Administrative Requirements: Requirements for progress submittals.

B. Shop Drawings: Submit in accordance with NEMA ICS 1. Include:

1. Prepare as-constructed control panel wiring diagrams to include any changes made during field installation and startup.

C. Product Data: Include for each component showing electrical characteristics and connection requirements.

D. Manufacturer's Instructions: Indicate application conditions and limitations of use stipulated by product testing agency. Include instructions for storage, handling, protection, examination, preparation, and installation of product.

E. Operation and Maintenance Data: Include bound copies of operating and programming instructions, adjustments, and preventative maintenance procedures and materials. Provide six complete copies of the operating and maintenance instructions, including parts lists for all of the equipment. One copy to be single sided for production of additional operation and maintenance manuals. Bind material in sections in hard backed binders.

1.7 CLOSEOUT SUBMITTALS

A. Section 01700 - Execution Requirements: Requirements for closeout submittals.

B. Record Documents: Indicate actual control panel layouts, wiring connections, and wire numbers.

C. Warranties: Completed original warranty forms filled out in OWNER's name and registered with manufacturer. Provide manufacturer's standard warranty.

1.8 QUALIFICATIONS

A. Fabricator: Company specializing in fabrication of control panels with minimum three years documented experience.

PART 2 PRODUCTS

2.1 CONTROL PANEL SCHEDULE

A.

Description	*Drawing #*
PLC Control Panel	EL-12

B. Fabrication: Shop-fabricate control panels to NEMA ICS 1.

C. Panel dimensions given are the minimum required. Ensure items shown on the general layouts can be mounted within given panel dimensions.

D. Install products in accordance with manufacturer's written instructions.

E. Use minimum control wire sizes as per schematics.

F. Run wires for door mounted items in "expando" type flexible covering. Spiral type wrapping shall not be used. Ground door to enclosure using manufacturer supplied braids and hardware.

G. Run wires in wireway and exit the wireway at the point nearest to the device to which it is wired.

H. Do not splice wires within a wireway.

I. Identify each wire at each termination point using markers bearing the complete wire number in accordance with Section 16075.

J. Neatly harness wires within wireways using tyrap fasteners or approved manufactured wiring organization harnesses.

K. Route AC wiring separately from DC wiring. Make allowance for this in the manufacture of the panel.

L. Verify that the number of terminal blocks is sufficient to make the identified connections. Furnish 20 percent spare terminal blocks.

M. Any steel fasteners shall be hot dip galvanized. Under no circumstances shall interior fasteners penetrate the panel skin.

N. Install programmable controllers furnished in accordance with Section 17451.

O. Provide cabling required to connect the PLC equipment mounted in the panel and as shown on Drawings.

P. Provide service and component identification in accordance with Section 16075.

Q. Wire I/O points and other panel devices point-to-point, if applicable.

R. Wire spare I/O points to terminal blocks and be identified with I/O address, if applicable.

S. Color code wires as per notes on layouts and schematics.

T. Provide all fusing for rail mounted terminal blocks, sized as per schematics.

U. Provide all pre-manufactured programming, control, and communication cables for panel mounted equipment.

V. Provide a 120 VAC duplex outlet mounted inside all panels for local computer programming use. Label outlet "FOR COMPUTER USE ONLY".

2.2 UNINTERRUPTIBLE POWER SUPPLY

A. Supply uninterruptible power supplies for each PLC based control panel; PLC Control Panel as shown on drawings, manufactured by APC (BR1500 Series) or approved equal.

B. Description: UPS shall be true on-line, reverse transfer type, UPS components, controls and backup battery shall be housed in one NEMA 1 enclosure. UPS shall be provided with monitoring means for local PLC to monitor UPS capacity in use and to indicate UPS alarm conditions.

C. UPS shall be of robust construction, suitable for industrial applications and provide clean, regulated AC power (120 V, 60 Hz) to the load.

D. UPS shall provide at least 30 minutes of backup power at full UPS nominal load. Size the UPS to meet the anticipated load demand of all control devices plus 25 percent.

2.3 ENCLOSURES

A. Control Enclosure: NEMA ICS 6 Type 4X for outdoor locations and Type 12 for indoor locations as manufactured by Hoffman or approved equal.

2.4 POWER SUPPLY

A. Provide and mount two industrially rated Power Supplies inside the Main Control Enclosure. Power Supplies shall be SDN Series, as manufactured by Sola, or approved equal. DIN Rail mount, 115 VAC nominal input voltage, 24 VDC nominal output voltage with 2.5 A nominal output current.

2.5 ETHERNET NETWORK

A. Provide and mount industrially rated managed Ethernet switch for the Main Control Enclosure. Switches shall be DRL-380 Series, as manufactured by Brad Communications, or approved equal. Full duplex, 10/100Mbps connection speed, 24 VDC power.

B. Switches shall be supplied with proper copper/fiber ports as necessary for local connections to PC, PLC, variable speed drives, and I/O modules.

C. Supply and terminate all CAT5 Ethernet cables and patch cords as required to interconnect the drives, PLC, PC, and I/O modules to Ethernet switches.

D. Program and configure all devices with IP addresses and subnet masks as supplied by ENGINEER.

2.6 SOURCE QUALITY CONTROL

A. Section 01400 - Quality Requirements.

B. Arrange for inspection of control panel at location of manufacture prior to shipment. Advise ENGINEER at least five working days in advance of inspection.

2.7 SPARE PARTS

A. Provide spare parts as follows:

1. Two fluorescent bulbs for panel lighting.

2. 25% by quantity of each fuse in panel (at least one).

3. One DC power supply

PART 3 EXECUTION

3.1 INSTALLATION

A. Install in accordance with manufacturer's instructions.

B. Do not install products until major construction is complete and building interior is enclosed.

3.2 FIELD QUALITY CONTROL

A. Section 01400 – Quality Requirements: Field inspection and testing. Perform operational testing on control systems to verify proper operation and field connections.

SECTION 17451

PROGRAMMABLE CONTROLLERS

PART 1 GENERAL

1.1 SECTION INCLUDES

A. Programmable controllers.

B. Programming software.

C. Cables and accessories.

D. Local operation terminal.

1.2 REFERENCES

A. Section 01400 - Quality Requirements: Requirements for references.

B. National Electrical Manufacturers Association (NEMA):

1. ICS 1 - General Standards for Industrial Control and Systems.

2. ICS 3 - Industrial Systems.

C. National Fire Protection Association, Inc. (NFPA): 70 - National Electrical Code.

D. Underwriters Laboratories Inc. (UL).

1.3 ALLOWANCES

A. Allowances shall be made for the number of days of commissioning or supervision required for installation, startup, and software debug at the time of bid with no additional payment for startup or commissioning.

1.4 REGULATORY REQUIREMENTS

A. Conform to NFPA 70.

B. Furnish products listed and classified by UL as suitable for purpose specified and shown.

1.5 PROGRESS SUBMITTALS

A. Section 01300 - Administrative Requirements: Requirements for progress submittals.

B. Shop Drawings: Indicate electrical characteristics and connection requirements, including layout of completed assemblies, interconnecting cabling, dimensions, weights, and external power requirements.

C. Product Data: Include for each component specified showing electrical characteristics and connection requirements.

D. Manufacturer's Instructions: Indicate application conditions and limitations of use stipulated by product testing agency. Include instructions for storage, handling, protection, examination, preparation, and installation of product.

E. CONTRACTOR shall submit to the ENGINEER layouts of all Operator screens, alarm summaries, databases, and reports along with all PLC software for review and approval at 30% completion, 60% completion, and prior to debug and startup of the system.

1.6 CLOSEOUT SUBMITTALS

A. Section 01700 - Execution Requirements: Requirements for closeout submittals.

B. Record Documents: Indicate actual locations of controller cabinets and input and output devices connected to system; include interconnection wiring and cabling information, and terminal block layouts in controller cabinets.

C. Operation and Maintenance Data: Include bound copies of operating and programming instructions, card replacement, adjustments, and preventative maintenance procedures and materials. Provide six complete copies of the operating and maintenance instructions, including parts lists for all of the equipment. One copy to be single sided for production of additional operation and maintenance manuals. Bind material in sections in hard backed binders.

D. Warranties: Completed original warranty forms filled out in OWNER's name and registered with manufacturer.

1.7 QUALIFICATIONS

A. Programmer: System Integrator specializing in control system programming with minimum 5 years documented experience.

1.8 DELIVERY, STORAGE, AND HANDLING

A. Section 01600 - Product Requirements: Requirements for transporting, handling, storing, and protecting products.

B. Accept products on Site in factory containers. Inspect for damage.

C. Store products in clean and dry area; maintain temperature in accordance with NEMA ICS 1.

1.9 ENVIRONMENTAL REQUIREMENTS

A. Section 01500 - Temporary Facilities and Controls: Requirements for temporary controls.

B. Maintain temperature above 32 degrees F and below 104 degrees F during and after installation of products.

C. Maintain area free of dirt and dust during and after installation of products.

1.10 WARRANTY

A. Section 01600 - Product Requirements: Requirements for warranties.

B. Provide manufacturer's standard warranty.

C. Fill out original warranty forms in OWNER's name and register with manufacturer.

D. Provide one year warranty on PLC and SCADA system custom software functionality.

1.11 SYSTEM STARTUP AND COMMISSIONING

A. Software commissioning and startup shall include, but not be limited to the following:

1. Process control system verification.

2. Operator interface device verification down to final control devices.

3. Systems power fail/restart testing to verify proper operation.

4. Verification of alarms and interlocks.

5. Loop Tuning

1.12 SOFTWARE PROGRAMMING

A. The drawings define the basic functional requirements of the control system. CONTRACTOR shall augment these functions as necessary to achieve a complete functional system. The CONTRACTOR shall provide fully operational and documented software for the PLC and SCADA Workstation. The software shall include all necessary logic, timing, filtering, deadbands, debouncing, mathematical, data handling, alarms and communication functions required to give smooth, reliable, safe control of the equipment.

B. General PLC Requirements:

1. Develop application software using Rockwell Software RSLogix 5000 programming software.

2. The overall PLC control program shall be divided into different tasks, utilizing subroutine files to segment a section of code that is particular to a specific function/device in the process.

3. For optimal system communications, all PLC data of the same type shall be assigned (mapped) to contiguous memory locations in a single data type arrays for the SCADA interface.

4. Develop Autodialer functionality logic to map alarms to the shared database as required. Configure the Autodialer for proper operation with the PLC.

C. General SCADA Interface Requirements:

1. Operator station software shall provide functionality as per drawings and 30% / 60%/ 90% review comments. This includes, but is not limited to the following:

1. Graphical viewing and control of processes.

2. Manual override where indicated and/or appropriate.

3. Historical and dynamic trending.

4. Alarm reporting and management.

5. Report generation.

6. Definition and construction of dynamic color graphic displays.

2. Provide a graphic user interface such that users shall be able to start and stop equipment or change setpoints from graphic displays through the use of a mouse and "point and click" operation.

3. Develop the SCADA application using Allen-Bradley RSView Studio software.

4. Design an efficient operator interface by making the following screen considerations: function key layout, alarm status line, time and date field, screen title, and menu selections.

D. SCADA Collection and Analysis of Historical Data:

1. Provide trending capabilities that allow the user to easily monitor and preserve records of system activity over an extended period of time. Any system point may be trended automatically at time-based intervals or changes of value, both of which shall be user-definable. Trend data may be stored on hard disk for future diagnostics and reporting.

2. Trend graphic displays shall be provided to allow the user to view all trended point data. Displays shall be actual plots of both static and/or real-time dynamic point data and may be customized to include individual points or predefined groups of at least four points. Provide additional functionality/configuration to allow any trended data to be transferred easily to Microsoft Excel. This shall allow the user to perform custom calculations such as energy usage, equipment efficiency chemical costs, and shall allow for generation of these reports on high quality plots, graphs, and charts.

3. CONTRACTOR shall, collectively with ENGINEER, determine the interval at which all trended data shall be stored on the SCADA computer hard drive.

E. SCADA Dynamic Color Graphic Displays:

1. Provide a complete set of color graphic displays based on flow sheets. All points on Attachment 1 - PLC I/O List and associated variables and parameters shall be dynamically displayed. However, no graphic display shall contain an excessive quantity of information so as to create unnecessary confusion for the operator. CONTRACTOR shall allow in his work a block of time for cooperatively defining OWNER's specific preferences for graphic display layout and organization.

2. Color conventions for graphic displays, pushbutton function, and device state or operating conditions shall be provided.

3. Provide an operator interface with a consistent look and feel. All displays should adhere to a common screen format and generally be organized in a consistent screen hierarchy that follows the flow of the process.

4. Provide an operator interface that allows users to access the various system schematics by graphical penetration or menu selection scheme. The graphical penetration scheme shall present a schematic overview as the top-level screen, then process unit schematics, then individual point, equipment, or control parameter details. A consistent screen navigation methodology shall be applied.

5. Dynamic values and equipment status shall be shown in their actual respective locations and shall automatically update to represent current conditions without operator intervention.

6. Graphic development software shall be provided to allow the user to add, modify, or delete system graphic displays.

1.13 SPARES

A. Provide one of each type of PLC I/O module and power supply for spares inventory.

PART 2 PRODUCTS

2.1 MANUFACTURERS

A. Allen-Bradley. No other acceptable manufacturers.

2.2 PROGRAMMABLE CONTROLLERS

A. Controller Requirements: The PLCs shall be Allen-Bradley CompactLogix with 1769 Series I/O as per control panel drawings and schematics. The PLC equipment is to be supplied and installed in control panels as shown on Drawings.

B. Appropriate terminal block housings and wiring harnesses is to be supplied with I/O cards and modules as appropriate for the type of card as per manufacturer's instructions.

C. Input/Output Schedule: Specific points are indicated on the Drawings and summarized in Attachment 1, PLC I/O List, appended to this Section.

D. System Configuration:

1. General Configuration: Main Control Panel:

Allen-Bradley Cat. No.	*Description*	*Quantity*
1769-L32E	CompactLogix Processor	1
1769-PA4	Power Supply	as required
1784-CF64	Compact Flash Memory	1
1769-IF8	4-20 mA, 8 pt. analog input	as required
1769-OF8C	4-20 mA, 8 pt. analog output	as required
1769-IQ16	24 VDC, 16 point input	as required
1769-OB16	24 VDC Sourcing, 16 point output	as required
Assorted	Cables, Interface Modules, Endcaps	as required

2.3 SCADA COMPUTER

A. The CONTRACTOR shall supply, program and install a desktop PC systems consisting of PC, monitor, keyboard and mouse.

B. The minimum PC hardware requirements are as follows:

1. Intel Core 2 Duo Processor E8400, 3.00 GHz, 6M, 1333 MHz FSB, with 3 GB DDR2 Non-ECC SDRAM, 800 MHz, (3 DIMM) memory.

2. Boot Drive - 160GB 3.5" SATA 3.0Gb/s and 8MB DataBurst Cache™.

3. Second Drive Option - 160GB 3.5" SATA 3.0Gb/s and 8MB DataBurst Cache™.

4. RAID 1 Hard Drive Mode.

5. 16X DVD-ROM, Cyberlink Power DVD™.

6. Integrated Video, Intel® GMA 4500.

7. 8 USB ports with at least two ports on the front.

8. Broadcom NetXtreme 10/100/1000 PCIe Gigabit Networking Card, Full Height (two cards per PC).

9. Mini-tower case, with standard power supply, operating from 120 VAC power.

10. Basic 3-year limited hardware warrantee.

11. Warranty and 3-Year NBD Onsite Support Service.

12. Chassis intrusion switch option.

13. Dell USB Optical Mouse with Scroll, All Black Design.

14. Dell Quitekey keyboard, no Hot Keys, English, Black.

15. 21-inch Wide Screen color graphics monitor.

C. The PC shall be provided with a licensed copy of Microsoft XP Professional on it.

D. The PC system shall be an OPTIPLEX 960 MT as manufactured by Dell or approved equal.

2.4 PROGRAMMING ACCESSORIES

A. PLC Programming Software: Provide RSLogix 5000, RSLinx Classic programming licenses. The licenses shall be registered in the OWNER’s name.

B. SCADA Programming Software: Provide RSView Studio Screen Development and RSView Machine Edition Runtime Software, and RSLinx Enterprise licenses. The licenses shall be registered in the OWNER’s name.

C. Provide all pre-manufactured programming, control, and communication cables for interconnecting all panel-mounted, field, and SCADA equipment.

PART 3 EXECUTION

3.1 INSTALLATION

A. Install in accordance with manufacturer's instructions.

B. Do not install products until major construction is complete and building interior is enclosed.

C. Connect input and output devices in accordance with Section 17431.

3.2 FIELD QUALITY CONTROL

A. Section 01400 - Quality Requirements: Field inspection and testing. Perform operational testing on control systems to verify proper operation and field wiring connections.

3.3 ADJUSTING

A. Section 01700 - Execution Requirements: Requirements for adjusting installed work.

B. Adjust process setpoints, alarm setpoints, timers, and durations as directed by ENGINEER.

C. Tune all control loops as directed by ENGINEER.

3.4 DEMONSTRATION

A. Section 01770 - Facility Operation: Requirements for demonstrating installed work.

B. Demonstrate the operation and programming of PLC controllers, including Ethernet communications. A PLC and SCADA software functionality testing and signoff sheet shall be developed by the CONTRACTOR, subject to approval by the ENGINEER. All aspects of system operation, display, communications, and SCADA operation shall be demonstrated in the presence of the ENGINEER in accordance with the testing and signoff sheet. Any modifications made to the system software due to insufficient testing and demonstration may nullify any previous system tests at the discretion of the ENGINEER.

C. Provide 16 hours of instruction each for two persons, to be conducted at Site with programmer.

END OF SECTION

APPENDIX I-2

DESIGN PLANS AND PROJECT SPECIFICATIONS
AIR SPARGE AND SOIL VAPOR EXTRACTION SYSTEM

DRAWING INDEX

DWG. Nº	REV. Nº	DATE	TITLE
CIVIL			
CI-01	-	05/20/10	SITE PLAN
CI-02	-	05/20/10	EXISTING CONDITIONS SITE PLAN
CI-03	-	05/20/10	PROPOSED SITE PLAN
CI-04	-	05/20/10	CROSS SECTION - GEOTECHNICAL
CI-05	-	05/20/10	PROPOSED TRENCH - CROSS SECTION AND PLAN VIEW
CI-06	-	05/20/10	ISOMETRIC VIEW PROPOSED TRENCH
CI-07	-	05/20/10	PROPOSED TRENCH CROSS SECTION AND PLAN VIEW A - A'
CI-08	-	05/20/10	PROPOSED TRENCH CROSS SECTION AND PLAN VIEW A' - A"
CI-09	-	05/20/10	PROPOSED TRENCH CROSS SECTION AND PLAN VIEW DETAIL CS - 1
CI-10	-	05/20/10	PROPOSED TRENCH CROSS SECTION AND PLAN VIEW DETAIL CS - 2
CI-11	-	05/20/10	PROPOSED TRENCH CROSS SECTION AND PLAN VIEW DETAIL CS - 3
CI-12	-	05/20/10	PROPOSED TRENCH CROSS SECTION AND PLAN VIEW DETAIL CS - 4
CI-13	-	05/20/10	PROPOSED TRENCH CROSS SECTION AND PLAN VIEW DETAIL CS - 5
CI-14	-	05/20/10	PROPOSED TRENCH CROSS SECTION AND PLAN VIEW DETAIL CS - 6
CI-15	-	05/20/10	PROPOSED TRENCH CROSS SECTION AND PLAN VIEW DETAIL CS - 7
CI-16	-	05/20/10	PROPOSED TRENCH CROSS SECTION AND PLAN VIEW DETAIL CS - 8
CI-17	-	05/20/10	WELL VAULT AND TREATMENT - PIPE TRENCH DETAILS
FLOW SHEETS			
EF-01	-	05/20/10	ENGINEERING FLOW SHEET LEGEND
EF-02	-	05/20/10	ENGINEERING FLOW SHEET
PF-01	-	05/20/10	PROCESS FLOW SHEET DIAGRAM
STRUCTURAL			
ST-01	-	05/20/10	TREATMENT BUILDING - GENERAL NOTES
ST-02	-	05/20/10	TREATMENT BUILDING - FOUNDATION AND FLOOR PLAN
ST-03	-	05/20/10	TREATMENT BUILDING - SECTION DETAILS
ST-04	-	05/20/10	TREATMENT BUILDING - CONCRETE DETAILS
ST-05	-	05/20/10	TREATMENT BUILDING - ROOF PLAN AND EXTERIOR WALL ELEVATIONS
ST-06	-	05/20/10	TREATMENT BUILDING - FLOOR PLAN AND INTERIOR WALL ELEVATIONS
ST-07	-	05/20/10	TREATMENT BUILDING - SYSTEM LAYOUT
ST-08	-	05/20/10	TREATMENT BUILDING - AIRE VENT AND FAN DETAILS
ELECTRICAL			
EL-01	-	01/19/10	ONE LINE DIAGRAM
EL-02	-	01/19/10	GROUNDING PLAN AND DETAILS
EL-03	-	01/19/10	LIGHTING PLAN AND DETAILS
EL-04 SHT.1	-	01/19/10	POWER PLAN AND DETAILS
EL-04 SHT.2	-	01/19/10	PANEL BOARD SCHEDULES
EL-05 SHT.1	-	01/19/10	SCHEMATIC WIRING DIAGRAMS
EL-05 SHT.2	-	01/19/10	SCHEMATIC WIRING DIAGRAMS
EL-05 SHT.3	-	01/19/10	SCHEMATIC WIRING DIAGRAMS
EL-05 SHT.4	-	01/19/10	SCHEMATIC WIRING DIAGRAMS
EL-06	-	01/19/10	INSTRUMENTATION PLAN AND DETAILS
EL-07	-	01/19/10	NETWORK ARCHITECTURE
EL-08	-	01/19/10	PLC CONTROL PANEL ARRANGEMENT AND BILL OF MATERIALS
EL-09 SHT.1	-	01/19/10	PLC CONTROL PANEL 120 VAC POWER DISTRIBUTION DIAGRAM
EL-09 SHT.2	-	01/19/10	PLC CONTROL PANEL 24 VDC POWER DISTRIBUTIION PANEL
EL-09 SHT.3	-	01/19/10	PLC CONTROL PANEL ANALOG INPUT WIRING DIAGRAM
EL-09 SHT.4	-	01/19/10	PLC CONTROL PANEL ANALOG INPUT WIRING DIAGRAM
EL-09 SHT.5	-	01/19/10	PLC CONTROL PANEL ANALOG INPUT WIRING DIAGRAM
EL-09 SHT.6	-	01/19/10	PLC CONTROL PANEL ANALOG INPUT WIRING DIAGRAM
EL-09 SHT.7	-	01/19/10	PLC CONTROL PANEL DIGITAL INPUT WIRING DIAGRAM
EL-09 SHT.8	-	01/19/10	PLC CONTROL PANEL DIGITAL INPUT WIRING DIAGRAM
EL-09 SHT.9	-	01/19/10	PLC CONTROL PANEL DIGITAL INPUT WIRING DIAGRAM
EL-09 SHT.10	-	01/19/10	PLC CONTROL PANEL DIGITAL OUTPUT WIRING DIAGRAM
EL-09 SHT.11	-	01/19/10	PLC CONTROL PANEL DIGITAL OUTPUT WIRING DIAGRAM

RADIO MATERIALS CORPORATION
ATTICA, INDIANA

TRENCH INSTALLATION FOR AIR SPARGE AND SVE PIPE SYSTEMS

19190-02 (044)
May, 2010

CONESTOGA-ROVERS & ASSOCIATES

HSA ENGINEERS & SCIENTISTS
A member of the CRA Family of Companies
1520 Royal Palm Square Boulevard, Suite 260 Fort Myers, Fl 33919 Tel. (239) 936-0709

Legend:

OB-01 ●	EXISTING OVERBURDEN MONITORING WELL LOCATION AND IDENTIFIER
BW-7 ■	EXISTING BEDROCK MONITORING WELL LOCATION AND IDENTIFIER
PZ-01 ⊕	EXISTING OVERBURDEN PIEZOMETER LOCATION
EW-0 ○	TEST EXTRACTION WELL LOCATION AND IDENTIFIER
PZ-07 ⊕ PZ-5BR	OVERBURDEN/BEDROCK PIEZOMETER NEST LOCATION AND IDENTIFIER
	PROJECT BOUNDARY
F	FENCE
G	GAS LINE
W	WATERMAIN / WATER SERVICE LINE
STM	STORM LINE
OE	OVERHEAD ELECTRIC LINE
	VEGETATION LINE
	DECIDUOUS TREE
	CONIFEROUS TREE
U.P. ●	UTILITY POLE
	GUY WIRE
R.S. ▪	ROAD SIGN
HYD ◇	HYDRANT
W.V. ◇	WATER VALVE
W.M. ▭	WATER METER
V.C. ○	VALVE CHAMBER
BELL PED. □	BELL PEDESTAL
STORM ○	STORM MANHOLE
C.B. □	CATCHBASIN
STD.P ◇	STANDPIPE
SPK ◦	SPRINKLER HEAD

Project Boundary

SCALE: 1" = 100'

CONESTOGA-ROVERS & ASSOCIATES

RADIO MATERIALS CORPORATION
ATTICA, INDIANA

SVE AND AIR SPARGE TREATMENT SYSTEM

SITE PLAN

Source Reference: CRA SURVEY, JUNE 8-19, 2009, US SURVEY FEET.	Date: MAY, 2010
Project Manager: G. WALTERS	Reviewed By: G. WALTERS
Designed By: ---	Drawn By: R. LEE
Scale: 1" = 100'	Project No: 19190-02
Report No: 044	Drawing No: C1 - 01

SCALE VERIFICATION
THIS BAR MEASURES 1" ON ORIGINAL. ADJUST SCALE ACCORDINGLY.

Approved

No	Revision	Date	Initial



Legend:

- EXISTING OVERBURDEN MONITORING WELL LOCATION AND IDENTIFIER
- EXISTING BEDROCK MONITORING WELL LOCATION AND IDENTIFIER
- PROJECT BOUNDARY
- GAS LINE
- WATERMAIN / WATER SERVICE LINE
- STORM LINE
- OVERHEAD ELECTRIC LINE
- MINOR SURFACE CONTOUR LINE
- MAJOR SURFACE CONTOUR LINE
- VEGETATION LINE
- DECIDUOUS TREE
- UTILITY POLE
- GUY WIRE
- ROAD SIGN
- HYDRANT
- WATER VALVE
- STORM MANHOLE
- DESIGN BORINGS

SCALE: 1" = 50'

CONESTOGA-ROVERS & ASSOCIATES

Source Reference: CRA SURVEY, JUNE 8-19, 2009. INDIANA WEST SPC, US SURVEY FEET.

Project Manager: G. WALTERS

Reviewed By: G. WALTERS

Designed By: ---

Drawn By: R. LEE

Date: MAY, 2010

Project No: 19190-02

Report No: 044

Scale: 1" = 50'

Drawing No: C1 - 02

RADIO MATERIALS CORPORATION
ATTICA, INDIANA

SVE AND AIR SPARGE TREATMENT SYSTEM

EXISTING CONDITIONS SITE PLAN

SCALE VERIFICATION

THIS BAR MEASURES 1" ON ORIGINAL. ADJUST SCALE ACCORDINGLY.

Approved

No	Revision	Date	Initial

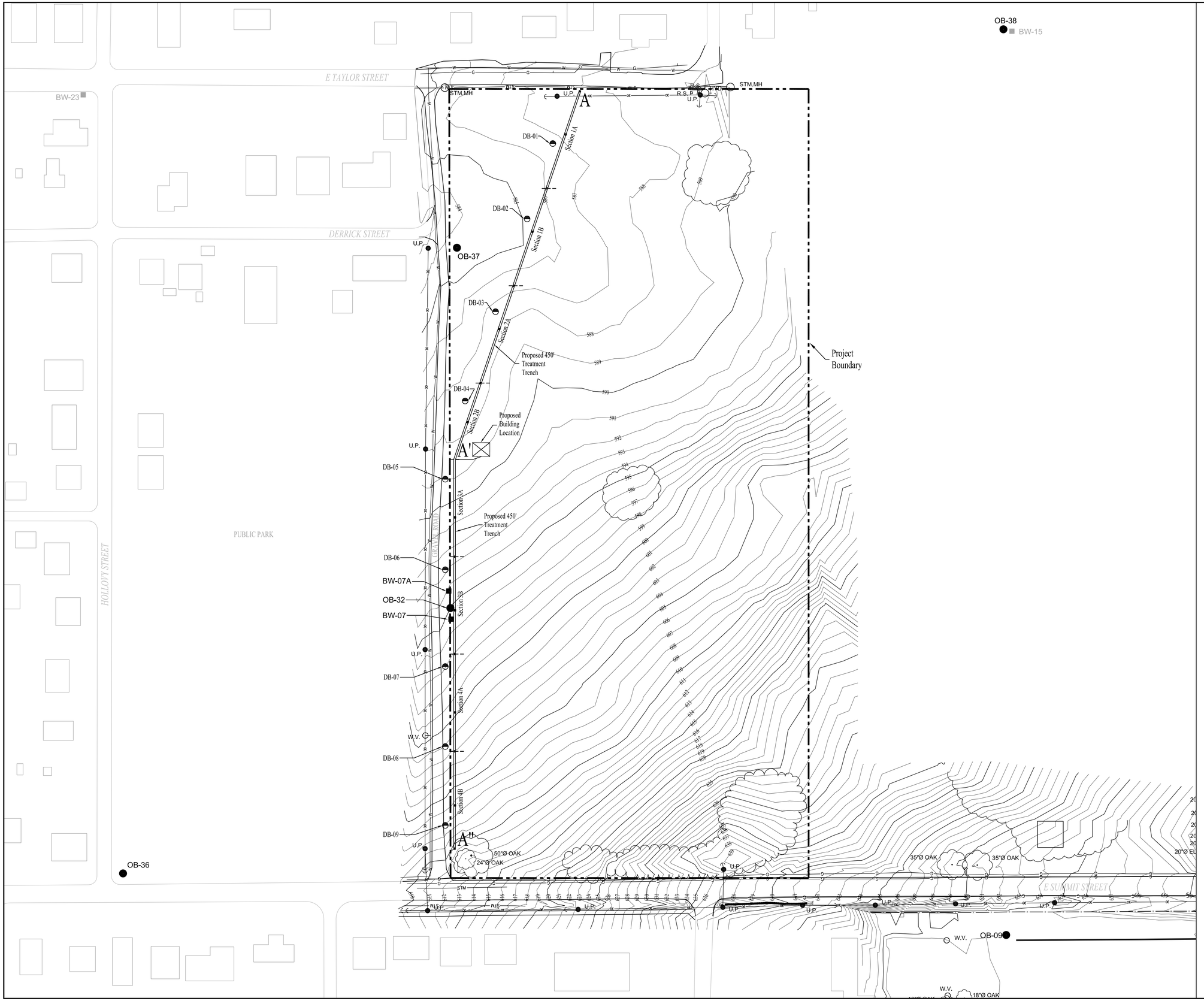

Legend:

- DB-01 ● — EXISTING OVERBURDEN MONITORING WELL LOCATION AND IDENTIFIER
- BW-7 ■ — EXISTING BEDROCK MONITORING WELL LOCATION AND IDENTIFIER
- PROPOSED TRENCH
- PROJECT BOUNDARY
- G — GAS LINE
- W — WATERMAIN / WATER SERVICE LINE
- STM — STORM LINE
- OE — OVERHEAD ELECTRIC LINE
- 584 — MINOR SURFACE CONTOUR LINE
- 585 — MAJOR SURFACE CONTOUR LINE
- VEGETATION LINE
- DECIDUOUS TREE
- U.P. — UTILITY POLE
- GUY WIRE
- R.S. — ROAD SIGN
- HYD. — HYDRANT
- W.V. — WATER VALVE
- STM.MH — STORM MANHOLE
- DESIGN BORINGS
- PROPOSED WELL VAULT
- PROPOSED SHEET PILING

CONESTOGA-ROVERS & ASSOCIATES

Source Reference: CRA SURVEY, JUNE 8-19, 2009. INDIANA VEST SPC, US SURVEY FEET.
Project Manager: G. WALTERS
Reviewed By: G. WALTERS
Project No: 19190-02
Scale: 1" = 50'
Date: Sept. 24, 2010
Designed By: ---
Drawn By: R. LEE
Report No: 044
Drawing No: CI - 03

RADIO MATERIALS CORPORATION
ATTICA, INDIANA

SVE AND AIR SPARGE TREATMENT SYSTEM

PROPOSED SITE PLAN

SCALE VERIFICATION
THIS BAR MEASURES 1" ON ORIGINAL. ADJUST SCALE ACCORDINGLY.

Approved

No	Revision	Date	Initial



Legend:

- Top Soil
- CH - Clay
- CL - ML Silty Clay
- SM - Silty Sand
- MLS Sandy Silt
- ML Silt
- GM Silty Gravel
- Bedrock - Shale and Siltstone

DB Design Boring

▽ Approximate Groundwater Elevation Based on Observations from Soil Borings

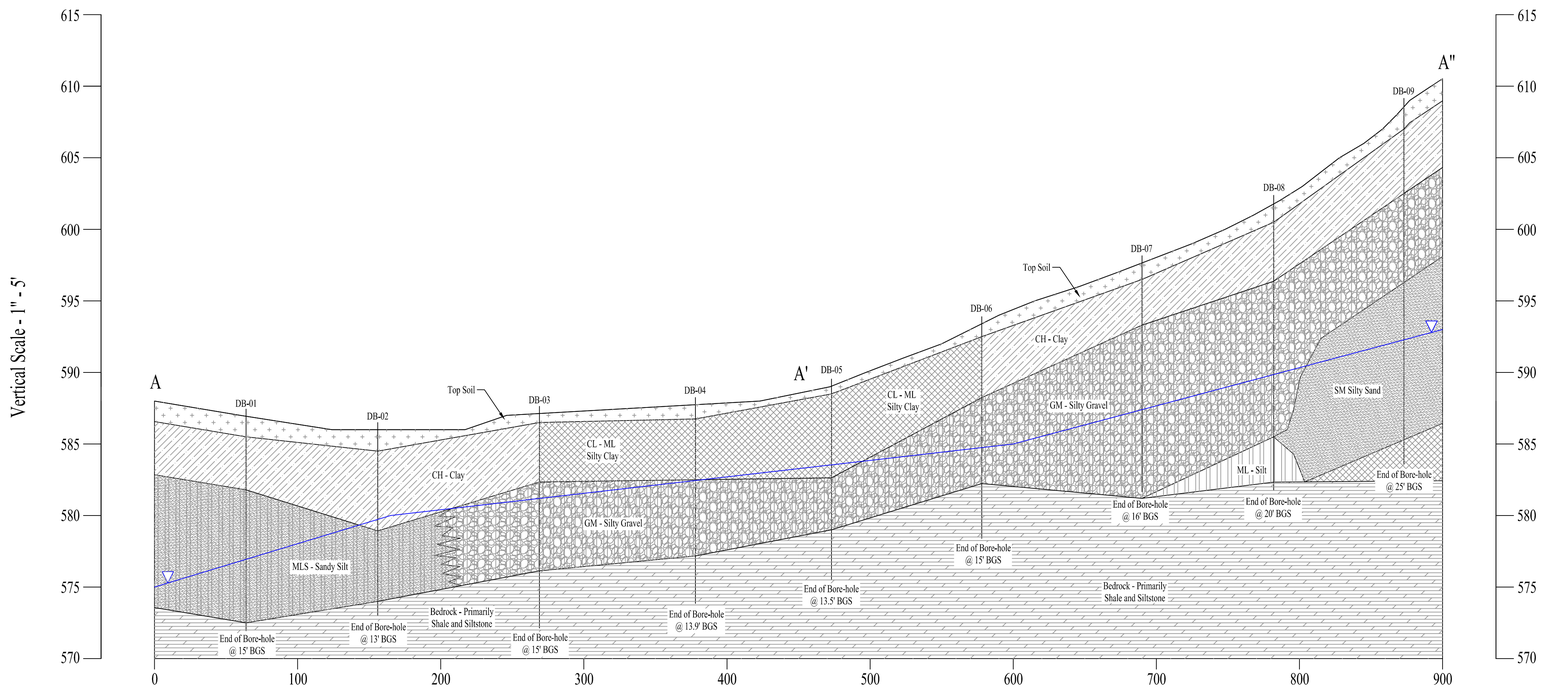

CONESTOGA-ROVERS & ASSOCIATES

Source Reference:
CRA SURVEY, JUNE 8-19, 2009. INDIANA WEST SPC, US SURVEY FEET.

Project Manager:
G. WALTERS

Scale:
VERTICAL 1" = 5'
HORIZONTAL 1" = 50'

Reviewed By:
G. WALTERS

Project No:
19190-02

Designed By:

Report No:
044

Date:
MAY, 2010

Drawn By:
R. LEE

Drawing No:
C1 - 04

RADIO MATERIALS CORPORATION
ATTICA, INDIANA

SVE AND AIR SPARGE TREATMENT SYSTEM

CROSS SECTION
GEOTECHNICAL

SCALE VERIFICATION
THIS BAR MEASURES 1" ON ORIGINAL. ADJUST SCALE ACCORDINGLY.

Approved

No	Revision	Date	Initial

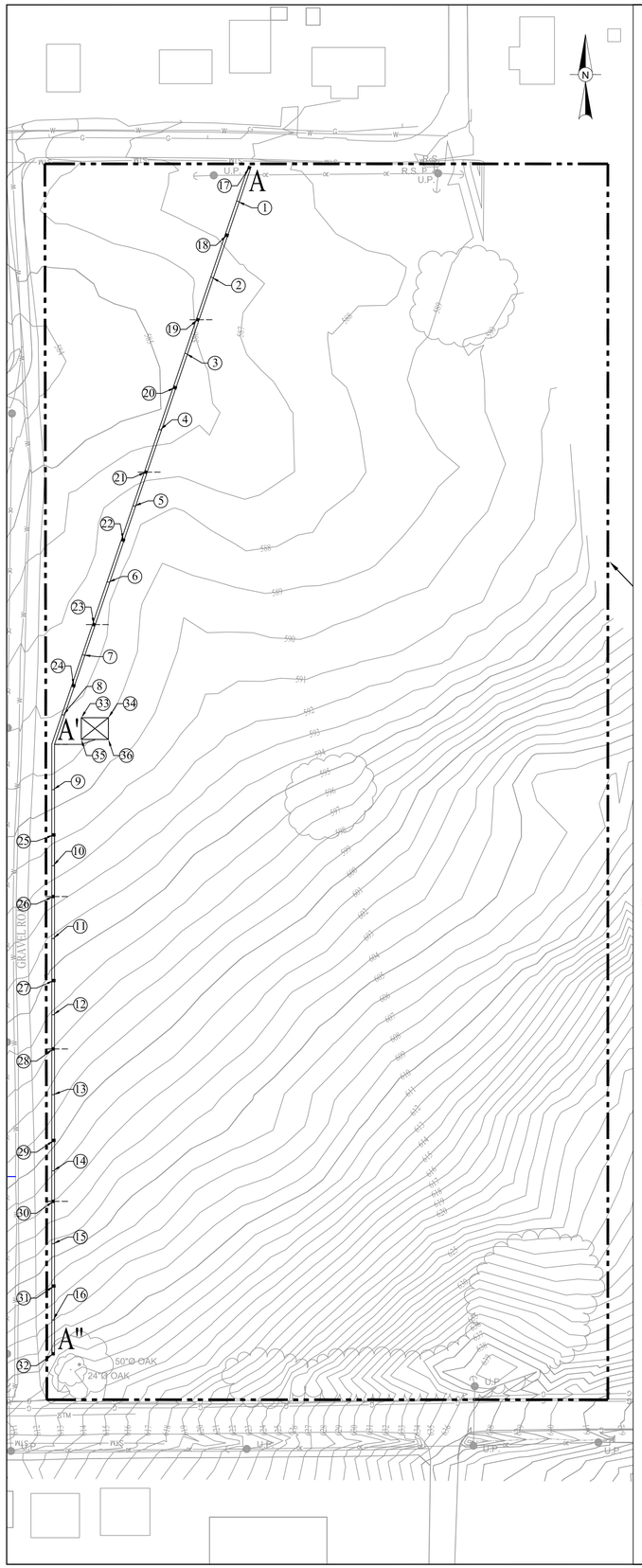

SVE - Air Sparge Trench and Well Vault Coordinates and Elevations				
Coordinate Point	Location ID	Elevation	Northing Coordinate	Easting Coordinate
1	TCP-1	587.5	1838829.14	2909236.43
2	TCP-2	586.5	1838773.04	2909217.35
3	TCP-3	585.5	1838716.79	2909198.21
4	TCP-4	585.5	1838660.54	2909179.07
5	TCP-5	587.5	1838604.29	2909159.93
6	TCP-6	587.5	1838548.04	2909140.8
7	TCP-7	587.5	1838494.29	2909122.51
8	TCP-8	588	1838450.07	2909107.46
9	TCP-9	589.5	1838394.89	2909100.11
10	TCP-10	591.5	1838338.72	2909100.11
11	TCP-11	594	1838284.97	2909100.11
12	TCP-12	596	1838228.72	2909100.11
13	TCP-13	598.5	1838169.72	2909100.11
14	TCP-14	601	1838113.47	2909100.11
15	TCP-15	604	1838059.72	2909100.11
16	TCP-16	608	1838003.47	2909100.11
17	Well Vault #1A-1 (Air Sparge)	588	1838853.99	2909244.89
18	Well Vault #1A-2 (SVE)	587	1838804.14	2909228.41
19	Well Vault #1B-1 (Air Sparge)	586	1838741.79	2909206.72
20	Well Vault #1B-2 (SVE)	586.5	1838691.64	2909190.13
21	Well Vault #2A-1 (Air Sparge)	587	1838629.29	2909168.44
22	Well Vault #2A-2 (SVE)	587.5	1838579.14	2909151.85
23	Well Vault #2B-1 (Air Sparge)	588	1838516.79	2909130.16
24	Well Vault #2B-2 (SVE)	588.5	1838471.64	2909115.28
25	Well Vault #3A-1 (SVE)	591	1838361.47	2909100.56
26	Well Vault #3A-2 (Air Sparge)	593	1838315.97	2909100.11
27	Well Vault #3B-1 (SVE)	595.5	1838253.97	2909100.56
28	Well Vault #3B-2 (Air Sparge)	599	1838203.47	2909100.11
29	Well Vault #4A-1 (SVE)	600	1838135.97	2909100.56
30	Well Vault #4A-2 (Air Sparge)	602.5	1838090.97	2909100.11
31	Well Vault #4B-1 (SVE)	606	1838028.47	2909100.56
32	Well Vault #4B-2 (Air Sparge)	611	1837978.47	2909100.11
33	BLDG NW Corner	588.5	1838447.98	2909120.86
34	BLDG NE Corner	589	1838447.98	2909140.86
35	BLDG SW Corner	589	1838431.98	2909120.86
36	BLDG SE Corner	589.5	1838431.98	2909140.86

Top Elevation for Air Sparge, SVE, and Vapor Monitoring Point pipes should be 4" - 6" above bottom floor elevation of well vault.
Well vault elevations should be 3" - 5" above existing grade.
TCP - Trench Coordinate Point
Coordinate Points and Elevations based on survey information provided by CRA Survey from June 8-19, 2009.

Legend:

- Proposed Soil Backfill
- Proposed Coarse Sand
- Proposed Concrete
- Bedrock - Shale and Siltstone
- Proposed Sheet Piling
- Proposed Polyethylene Liner
- Proposed Geotextile Fabric
- Proposed Water Treatment Levels
- Proposed 3" Air Sparge HDPE Pipe
- Proposed 4" SVE PVC Pipe
- Proposed 1.5" Electrical Conduit
- Proposed 1" Vacuum Monitoring Point
- Approximate Groundwater Elevation Based on Observations from Soil Borings
- Estimated Groundwater Levels after Placement of Sheet Pile Walls

Note:

Well vaults, air sparging pipe systems, SVE pipe systems, vacuum monitoring points and electrical conduit systems are drawn based on the Vertical Scale of 1" - 5' in the cross section. Plan view not drawn to scale.

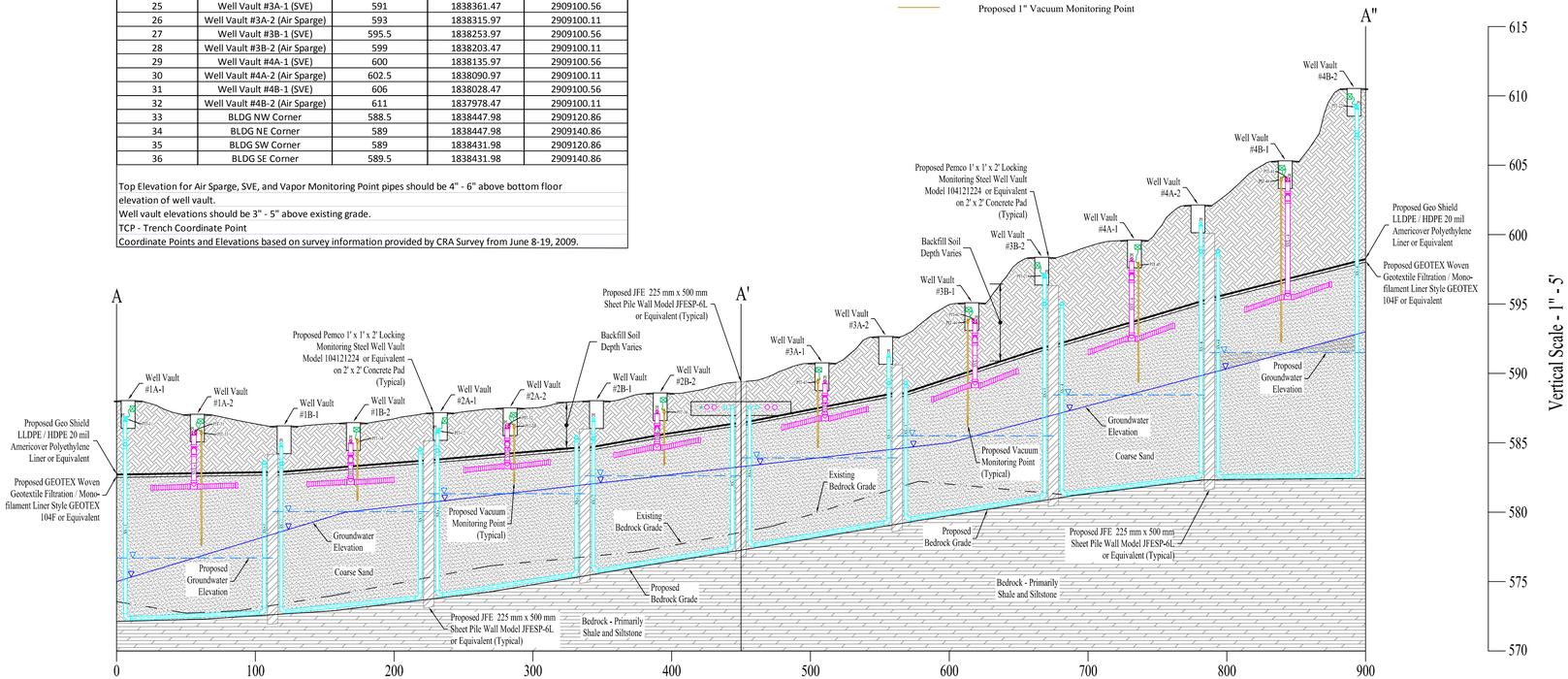

Horizontal Scale - 1" - 50'
Cross Section - Proposed Trench

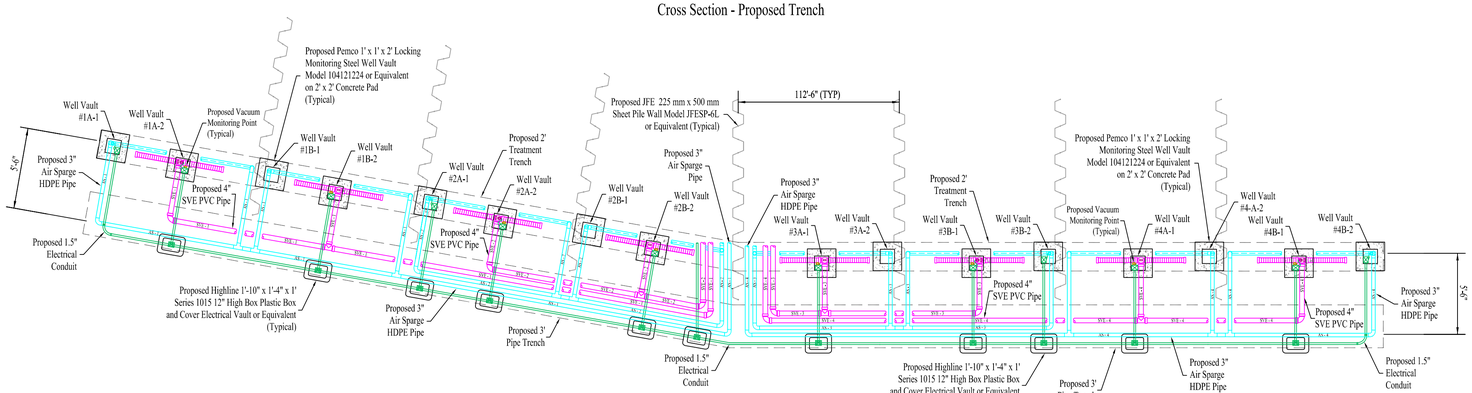

Not To Scale
Plan View - Proposed Trench

CONESTOGA-ROVERS & ASSOCIATES

RADIO MATERIALS CORPORATION
ATTICA, INDIANA

SVE AND AIR SPARGE TREATMENT SYSTEM

PROPOSED TRENCH
CROSS SECTION AND PLAN VIEW

Source Reference: CRA SURVEY, JUNE 8-19, 2009 US SURVEY FEET.	INDIANA WEST SPC,
Project Manager: G. WALTERS	Reviewed By: G. WALTERS
Scale: VERTICAL 1" = 5' HORIZONTAL 1" = 50'	Project No: 19190-02
Date: MAY, 2010	
Designed By: G. WALTERS	Drawing No: C1 - 05
Drawn By: R. LEE	Report No: 044

SCALE VERIFICATION
THIS BAR MEASURES 1" ON ORIGINAL. ADJUST SCALE ACCORDINGLY.

Approved

No	Revision	Date	Initial

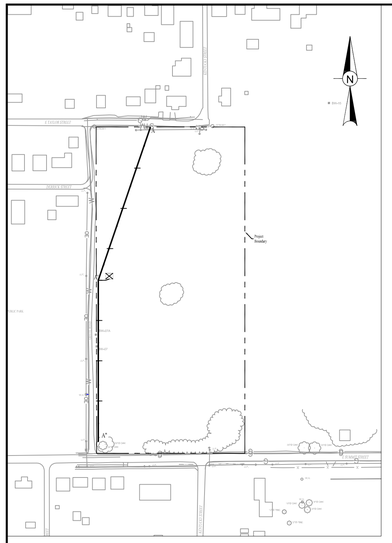

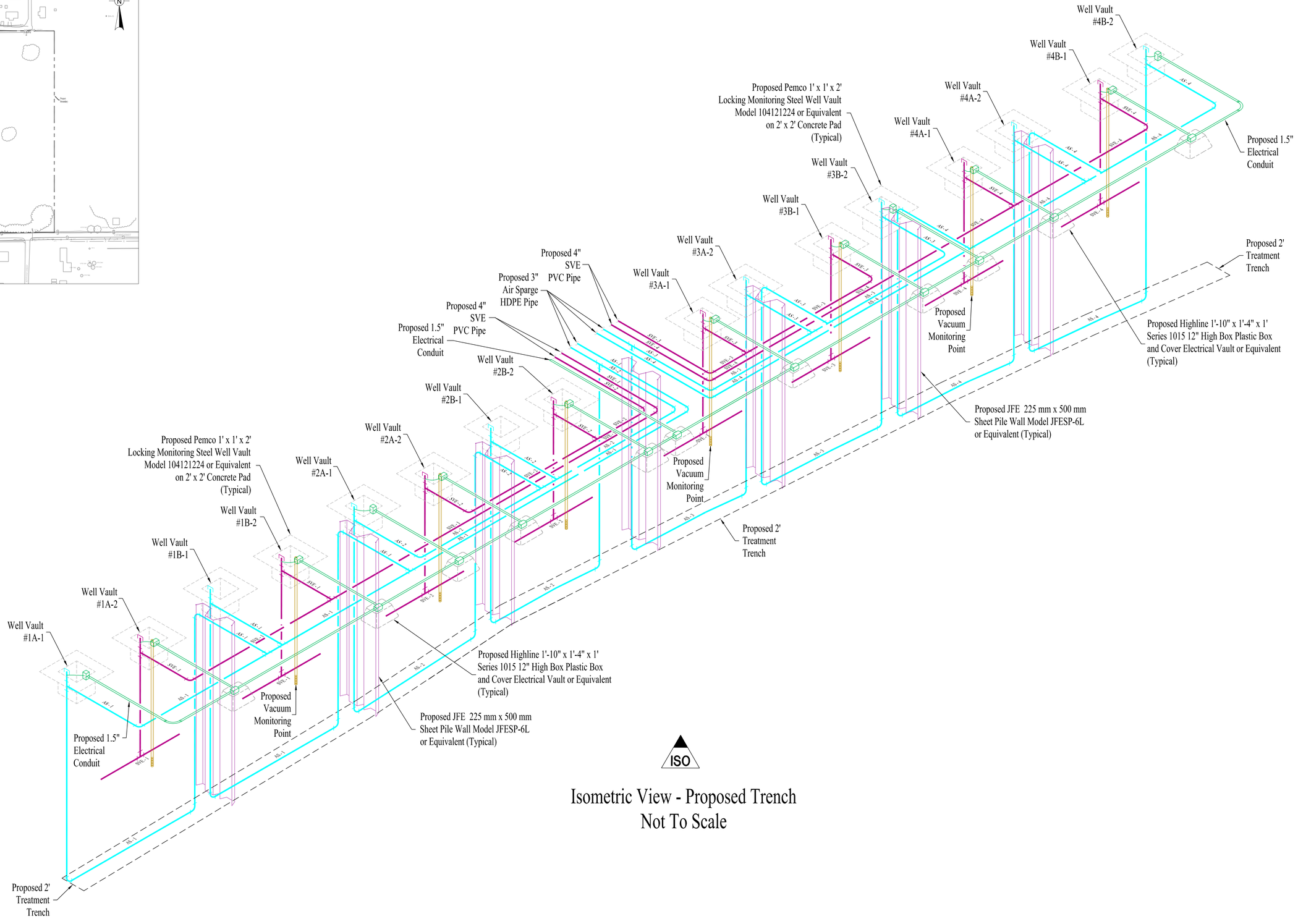

Isometric View - Proposed Trench
Not To Scale

CONESTOGA-ROVERS & ASSOCIATES

Source Reference: CRA SURVEY, JUNE 8-19, 2009. INDIANA WEST SPC, US SURVEY FEET.
Project Manager: G. VALTERS
Reviewed By: G. VALTERS
Project No: 19190-02
Scale: NOT TO SCALE
Date: MAY, 2010
Designed By: G. VALTERS
Drawn By: R. LEE
Report No: 044
Drawing No: C1 - 06

RADIO MATERIALS CORPORATION
ATTICA, INDIANA

SVE AND AIR SPARGE TREATMENT SYSTEM

ISOMETRIC VIEW
PROPOSED TRENCH

SCALE VERIFICATION
THIS BAR MEASURES 1" ON ORIGINAL. ADJUST SCALE ACCORDINGLY.

Approved

No	Revision	Date	Initial

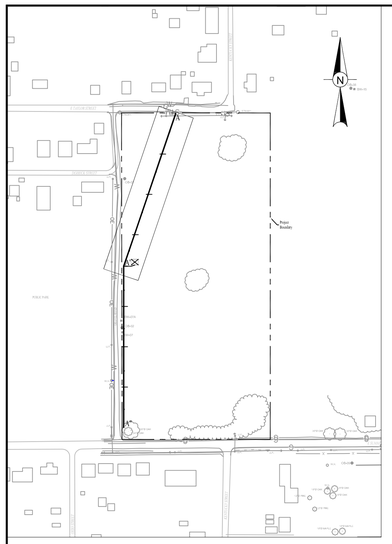
N
Project Boundary
Former Building
Former Building
Former Building

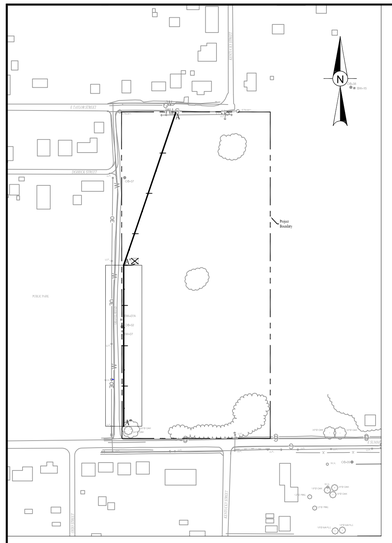

Legend:

- Proposed Soil Backfill
- Proposed Coarse Sand
- Proposed Concrete
- Bedrock - Shale and Siltstone
- Proposed Sheet Piling
- Proposed Polyethylene Liner
- Proposed Geotextile Fabric
- Proposed Water Treatment Levels
- Proposed 3" Air Sparge HDPE Pipe
- Proposed 4" SVE PVC Pipe
- Proposed 1.5" Electrical Conduit
- Proposed 1" Vacuum Monitoring Point
- Approximate Groundwater Elevation Based on Observations from Soil Borings
- Estimated Groundwater Levels after Placement of Sheet Pile Walls

Note:

Well vaults, air sparging pipe systems, SVE pipe systems, vacuum monitoring points and electrical conduit systems are drawn based on the Vertical Scale of 1" - 2.5' in the cross section. Plan view not drawn to scale.

Horizontal Scale - 1" - 25'
Cross Section - Trench Section
A' - A"

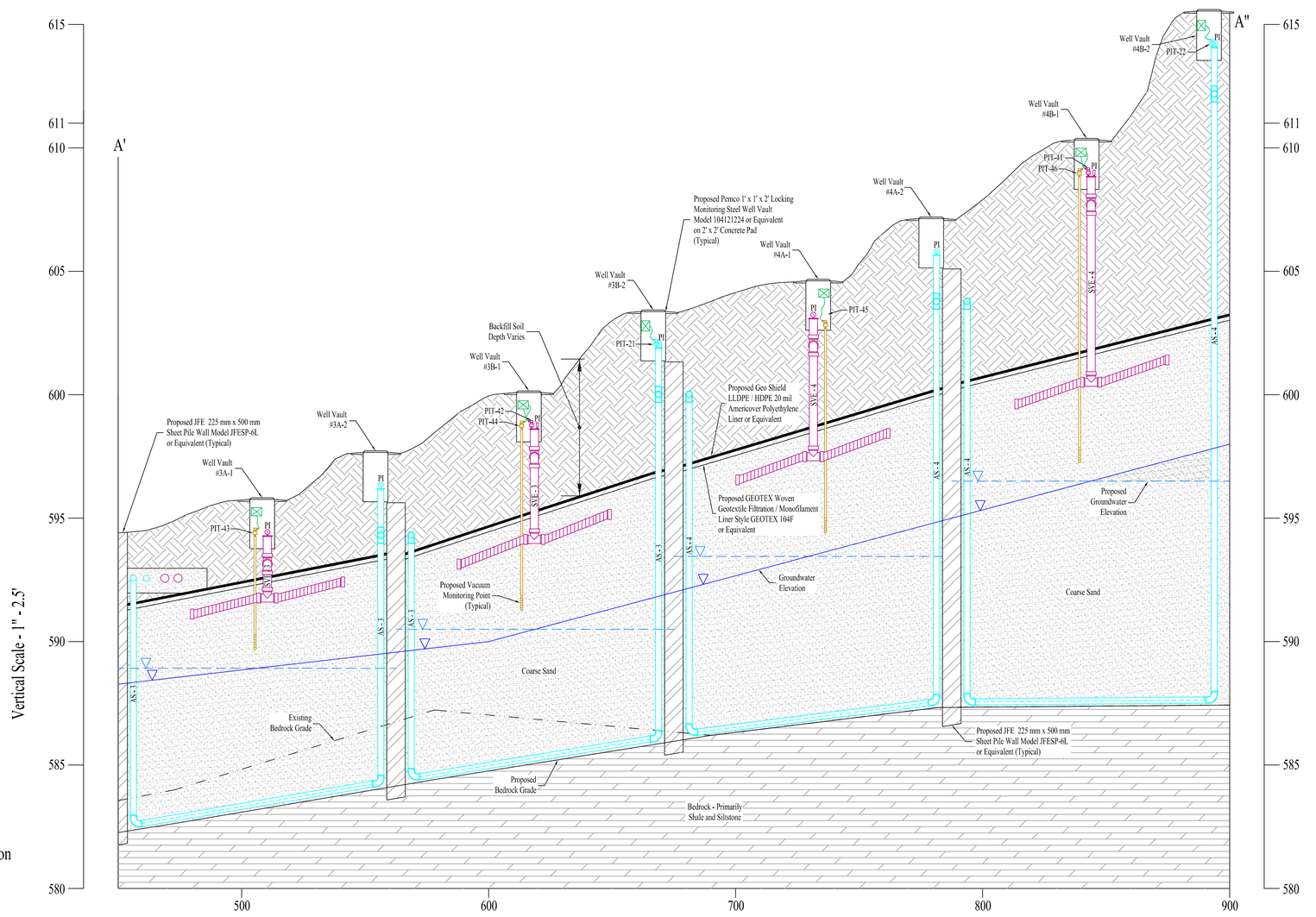

Not To Scale
Plan View - Trench Section
A' - A"

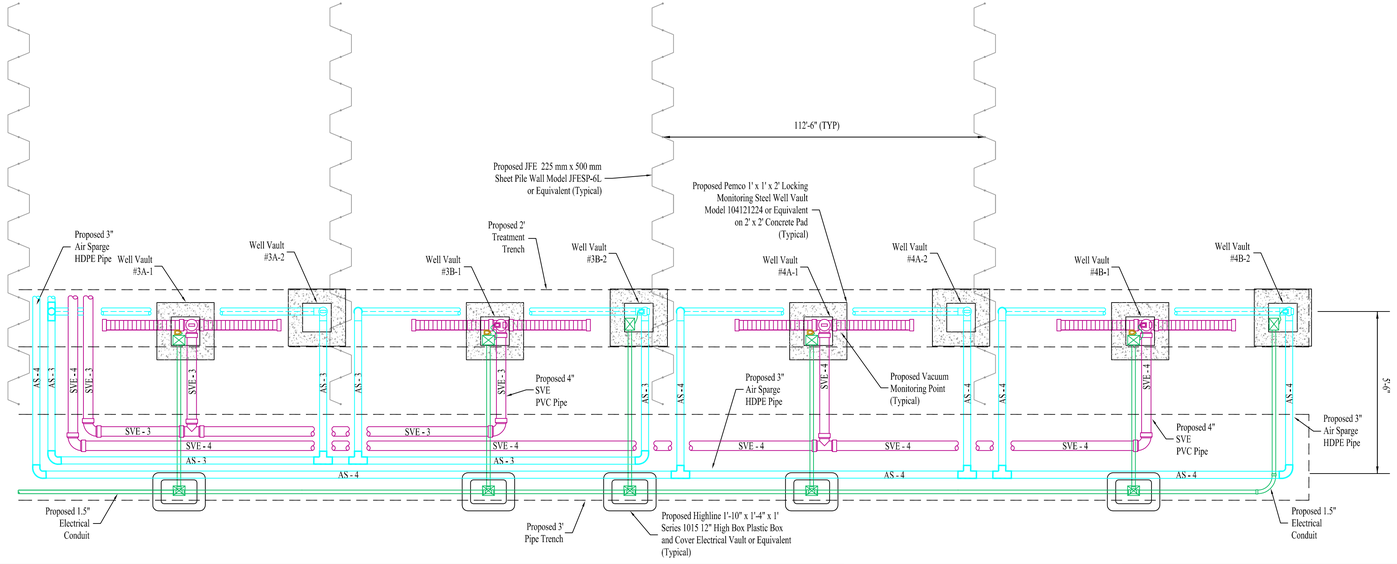

CONESTOGA-ROVERS & ASSOCIATES

RADIO MATERIALS CORPORATION ATTICA, INDIANA

SVE AND AIR SPARGE TREATMENT SYSTEM

PROPOSED TRENCH CROSS SECTION AND PLAN VIEW A'-A"

Source Reference: CRA SURVEY, JUNE 8-19, 2009. INDIANA WEST SPC, US SURVEY FEET.	Date: MAY, 2010
Project Manager: G. WALTERS	Designed By: G. WALTERS
	Drawn By: R. LEE
Scale: VERTICAL 1" = 2.5' HORIZONTAL 1" = 25'	Project No: 19190-02
	Report No: 044
	Drawing No: C1 - 08

SCALE VERIFICATION
THIS BAR MEASURES 1" ON ORIGINAL. ADJUST SCALE ACCORDINGLY.

Approved

No	Revision	Date	Initial

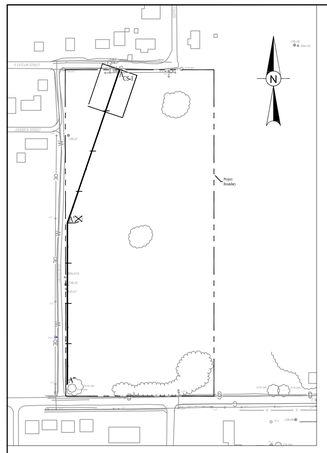

Legend:

- Proposed Soil Backfill
- Proposed Coarse Sand
- Proposed Concrete
- Bedrock - Shale and Siltstone
- Proposed Sheet Piling
- Proposed Polyethylene Liner
- Proposed Geotextile Fabric
- Proposed Water Treatment Levels
- Approximate Groundwater Elevation Based on Observations from Soil Borings
- Estimated Groundwater Levels after Placement of Sheet Pile Walls
- Proposed 3" Air Sparge HDPE Pipe
- Proposed 4" SVE PVC Pipe
- Proposed 1.5" Electrical Conduit
- Proposed 1" Vacuum Monitoring Point

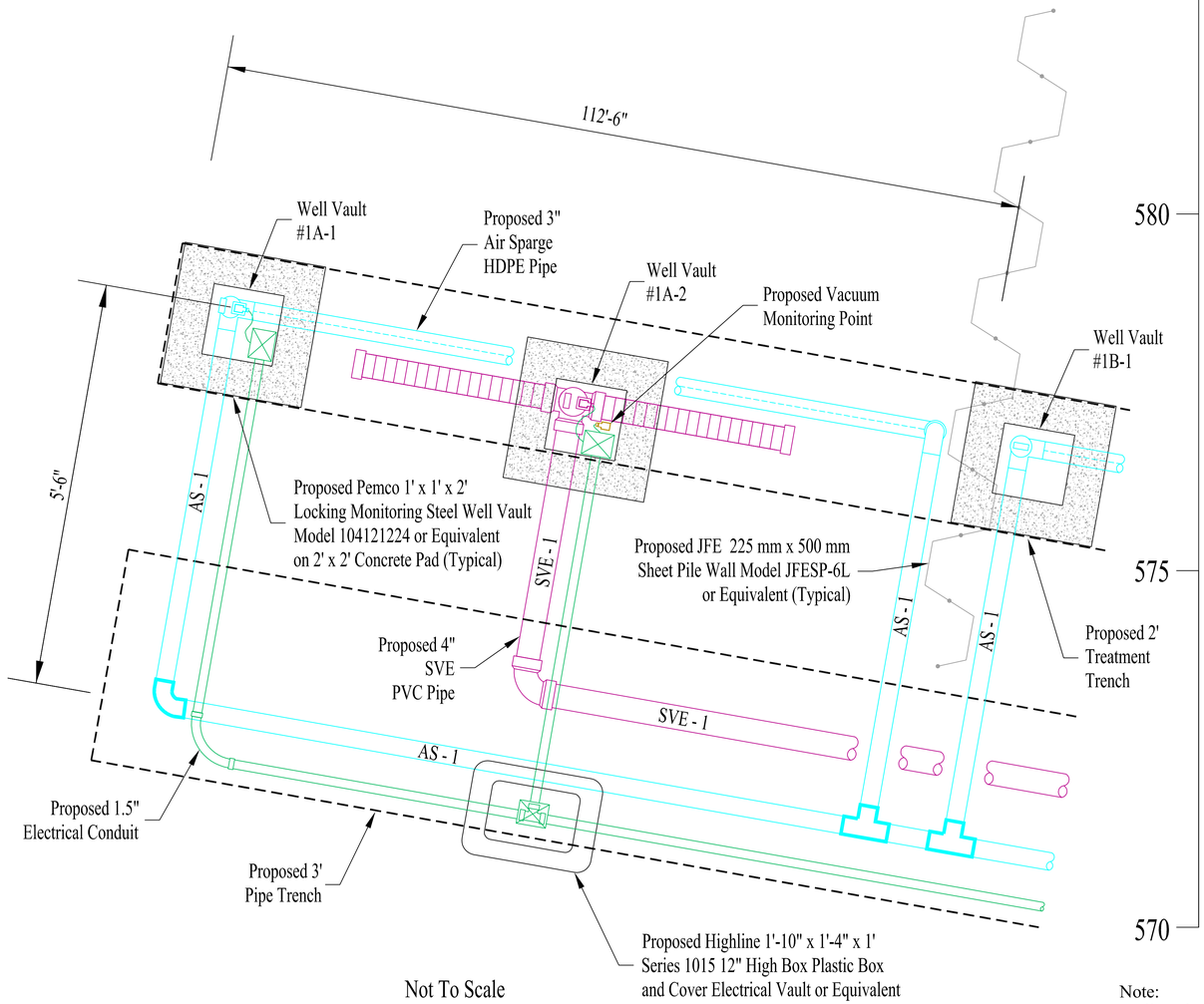

Not To Scale
Plan View - Proposed Trench
Detail CS-1

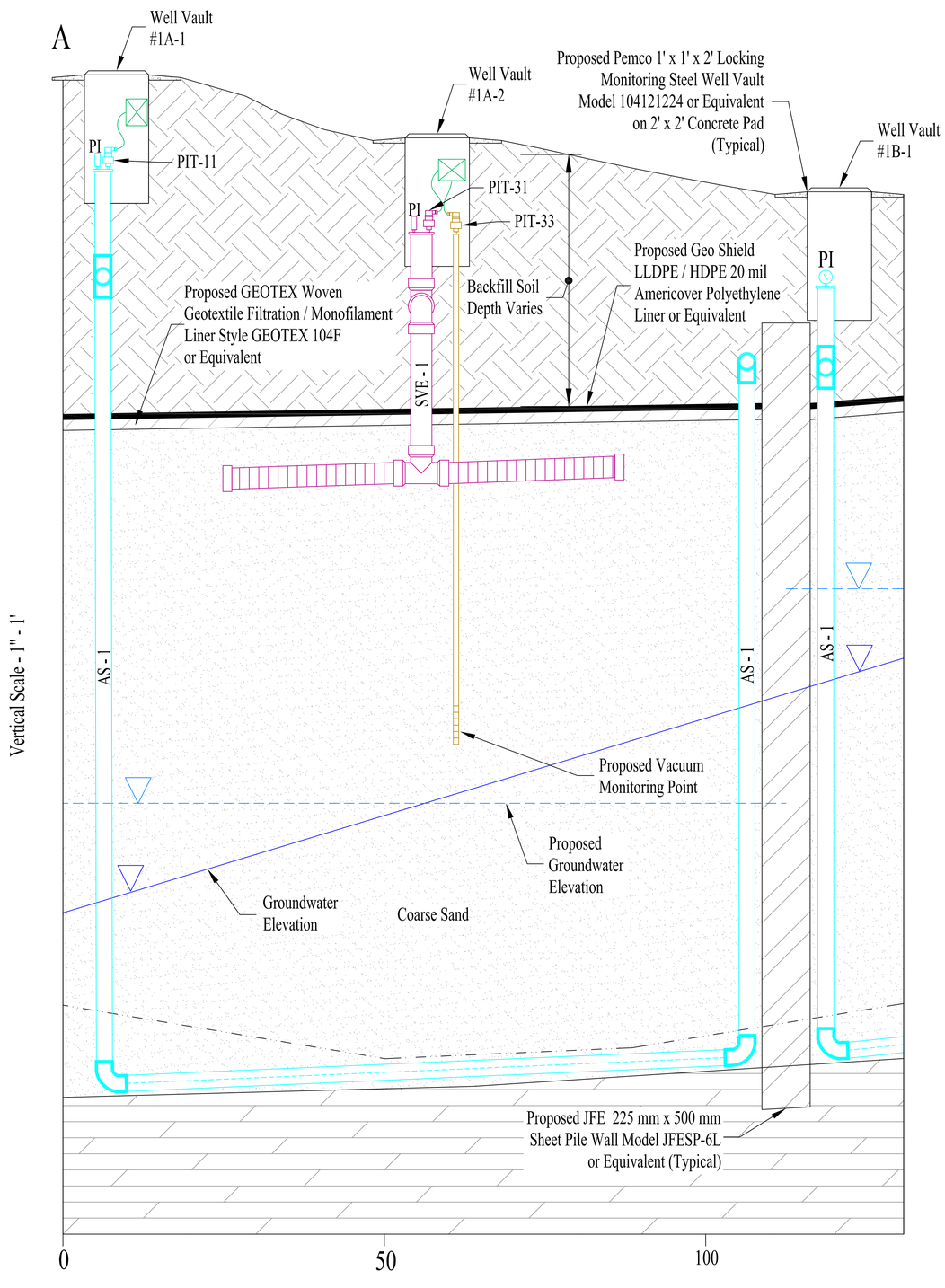

Horizontal Scale - 1" - 10'
Cross Section - Proposed Trench
Detail CS-1

Note:
Well vaults, air sparging pipe systems, SVE pipe systems, vacuum monitoring points and electrical conduit systems are drawn based on the Vertical Scale of 1" - 1' in the cross section. Plan view not drawn to scale.

CONESTOGA-ROVERS & ASSOCIATES

RADIO MATERIALS CORPORATION
ATTICA, INDIANA

SVE AND AIR SPARGE TREATMENT SYSTEM

PROPOSED TRENCH CROSS SECTION AND PLAN VIEW DETAIL CS - 1

Source Reference: CRA SURVEY, JUNE 8-19, 2009. INDIANA WEST SPC, US SURVEY FEET.
Project Manager: G. VALTERS
Scale: VERTICAL 1" = 1' HORIZONTAL 1" = 10'
Reviewed By: G. VALTERS
Project No: 19190-02
Designed By: G. VALTERS
Report No: 044
Date: MAY, 2010
Drawn By: R. LEE
Drawing No: C1 - 09

SCALE VERIFICATION
THIS BAR MEASURES 1" ON ORIGINAL. ADJUST SCALE ACCORDINGLY.

Approved

No	Revision	Date	Initial

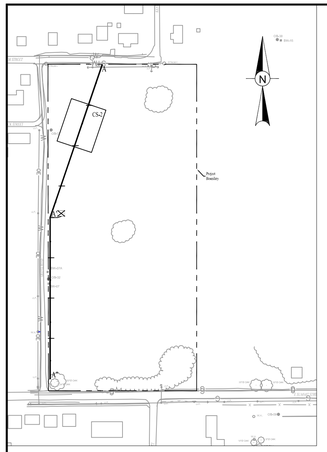

Legend:

- Proposed Soil Backfill
- Proposed Coarse Sand
- Proposed Concrete
- Bedrock - Shale and Siltstone
- Proposed Sheet Piling
- Proposed Polyethylene Liner
- Proposed Geotextile Fabric
- Proposed Water Treatment Levels
- Approximate Groundwater Elevation Based on Observations from Soil Borings
- Estimated Groundwater Levels after Placement of Sheet Pile Walls
- Proposed 3" Air Sparge HDPE Pipe
- Proposed 4" SVE PVC Pipe
- Proposed 1.5" Electrical Conduit
- Proposed 1" Vacuum Monitoring Point

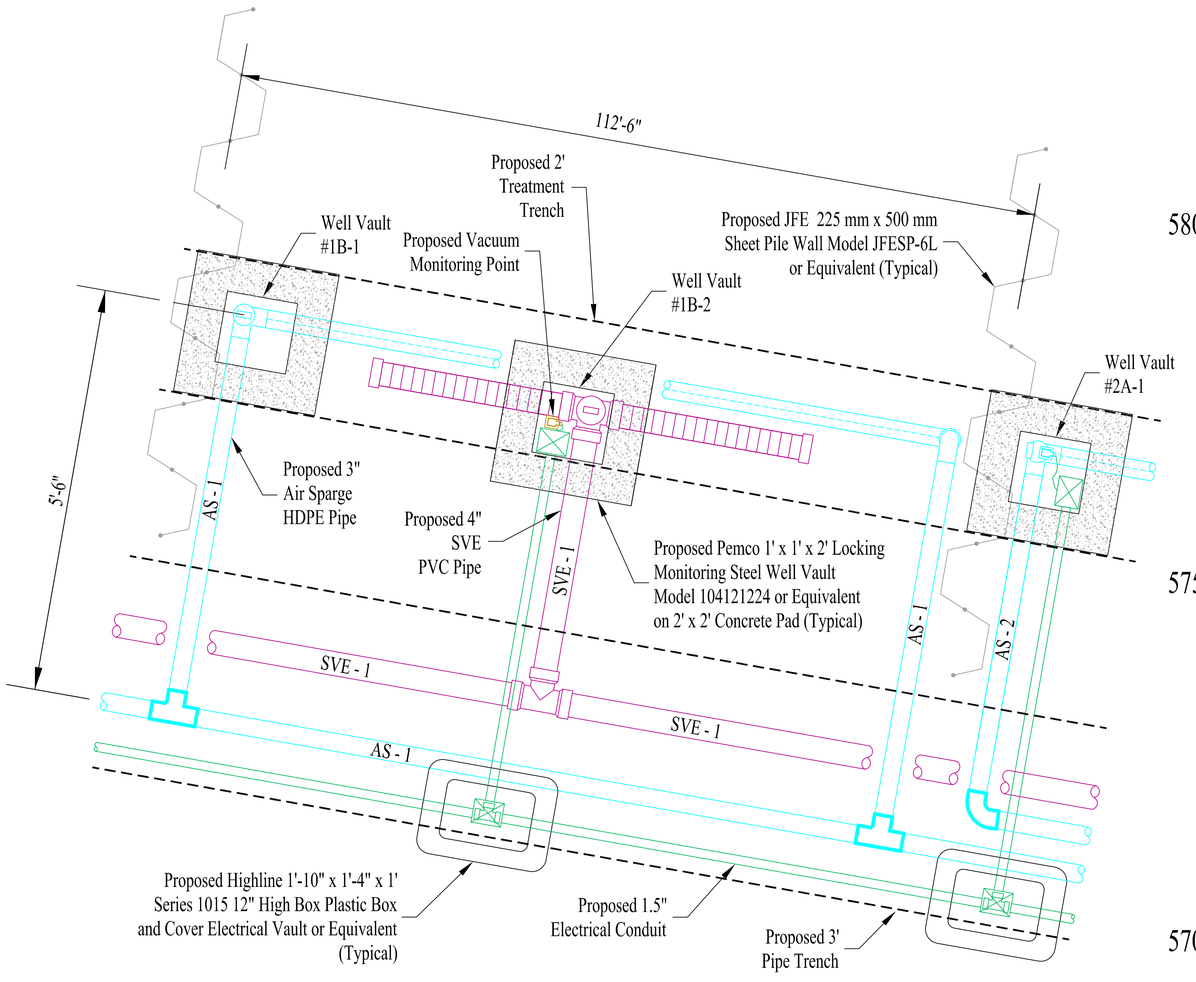

Not To Scale
Plan View - Proposed Trench
Detail CS-2

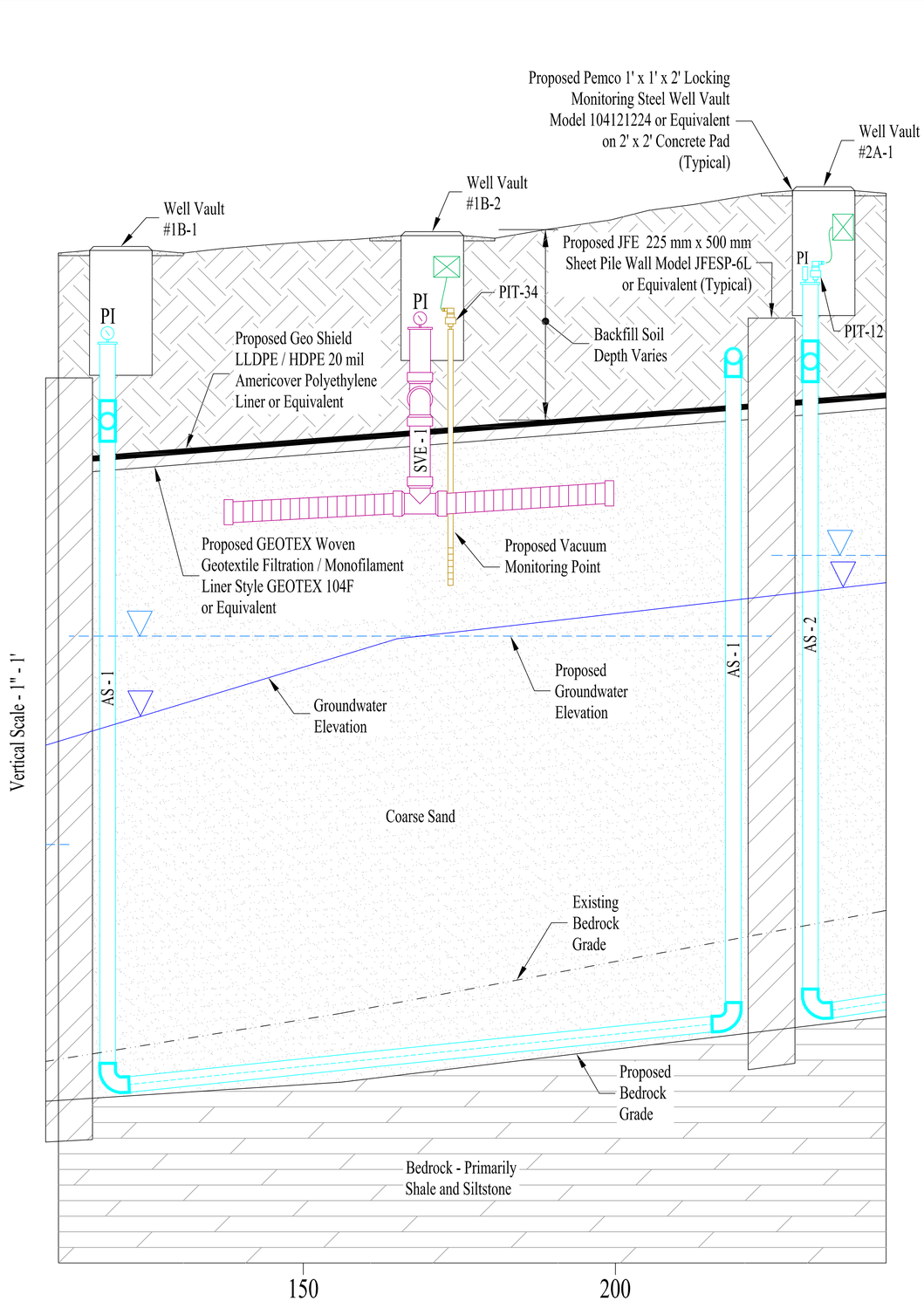

Horizontal Scale - 1" - 10'
Cross Section - Proposed Trench
Detail CS-2

Note:
Well vaults, air sparging pipe systems, SVE pipe systems, vacuum monitoring points and electrical conduit systems are drawn based on the Vertical Scale of 1" - 1' in the cross section. Plan view not drawn to scale.

CONESTOGA-ROVERS & ASSOCIATES

Source Reference: CRA SURVEY, JUNE 8-19, 2009. INDIANA WEST SPC, US SURVEY FEET.
Date: MAY, 2010
Project Manager: G. WALTERS
Reviewed By: G. WALTERS
Designed By: G. WALTERS
Drawn By: R. LEE
Scale: VERTICAL 1" = 1' HORIZONTAL 1" = 10'
Project No: 19190-02
Report No: 044
Drawing No: C1 - 10

RADIO MATERIALS CORPORATION
ATTICA, INDIANA

SVE AND AIR SPARGE TREATMENT SYSTEM

PROPOSED TRENCH CROSS SECTION AND PLAN VIEW DETAIL CS - 2

SCALE VERIFICATION
THIS BAR MEASURES 1" ON ORIGINAL. ADJUST SCALE ACCORDINGLY.

Approved

No	Revision	Date	Initial

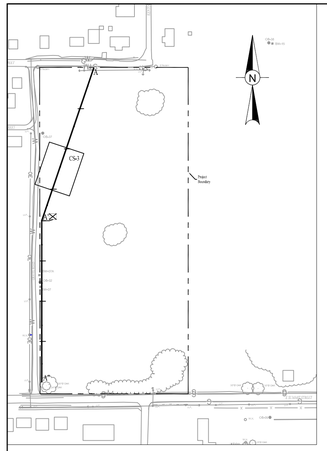

Legend:

- Proposed Soil Backfill
- Proposed Coarse Sand
- Proposed Concrete
- Bedrock - Shale and Siltstone
- Proposed Sheet Piling
- Proposed Polyethylene Liner
- Proposed Geotextile Fabric
- Proposed Water Treatment Levels
- Approximate Groundwater Elevation Based on Observations from Soil Borings
- Estimated Groundwater Levels after Placement of Sheet Pile Walls
- Proposed 3" Air Sparge HDPE Pipe
- Proposed 4" SVE PVC Pipe
- Proposed 1.5" Electrical Conduit
- Proposed 1" Vacuum Monitoring Point

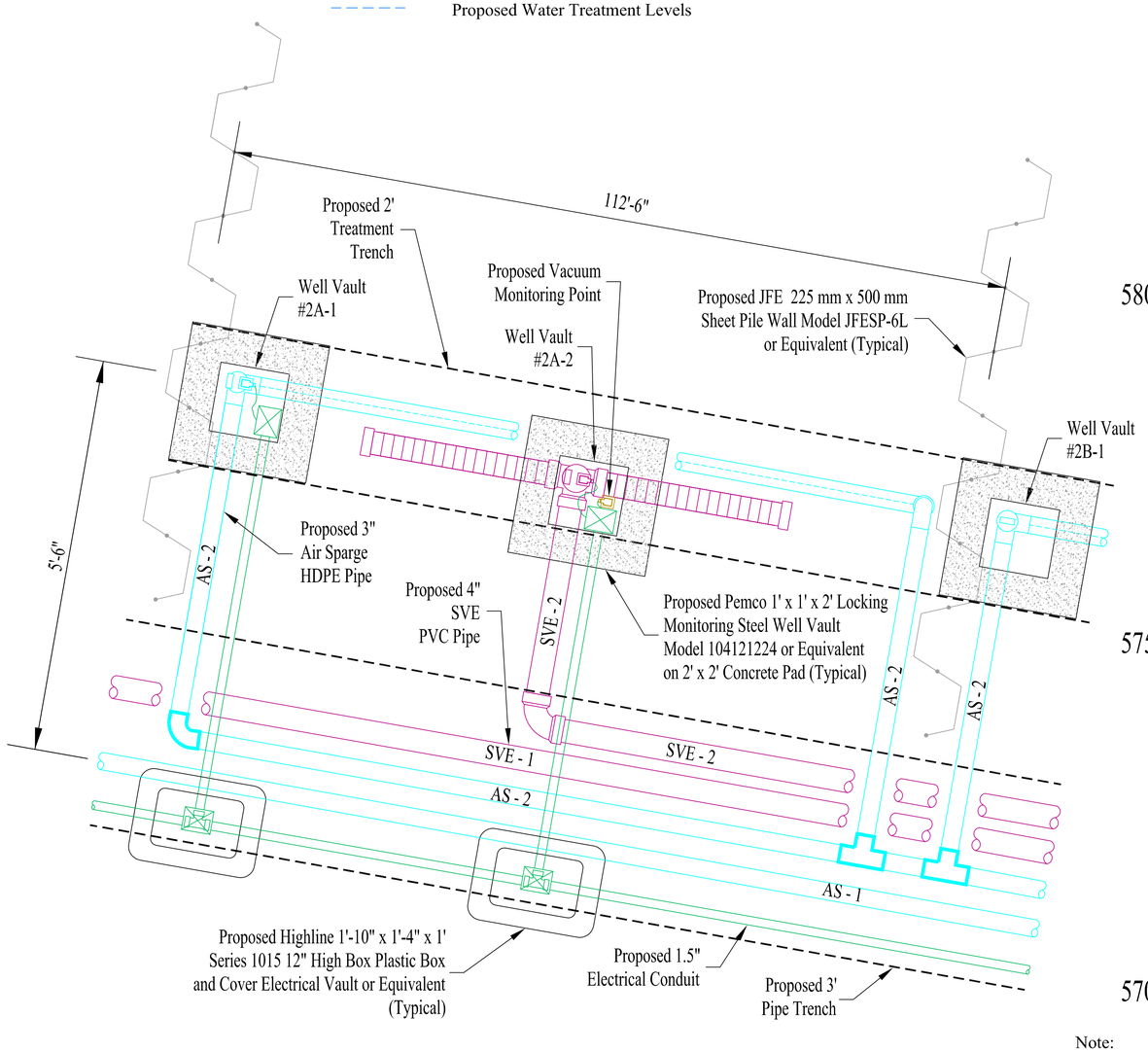

Not To Scale
Plan View - Proposed Trench
Detail CS-3

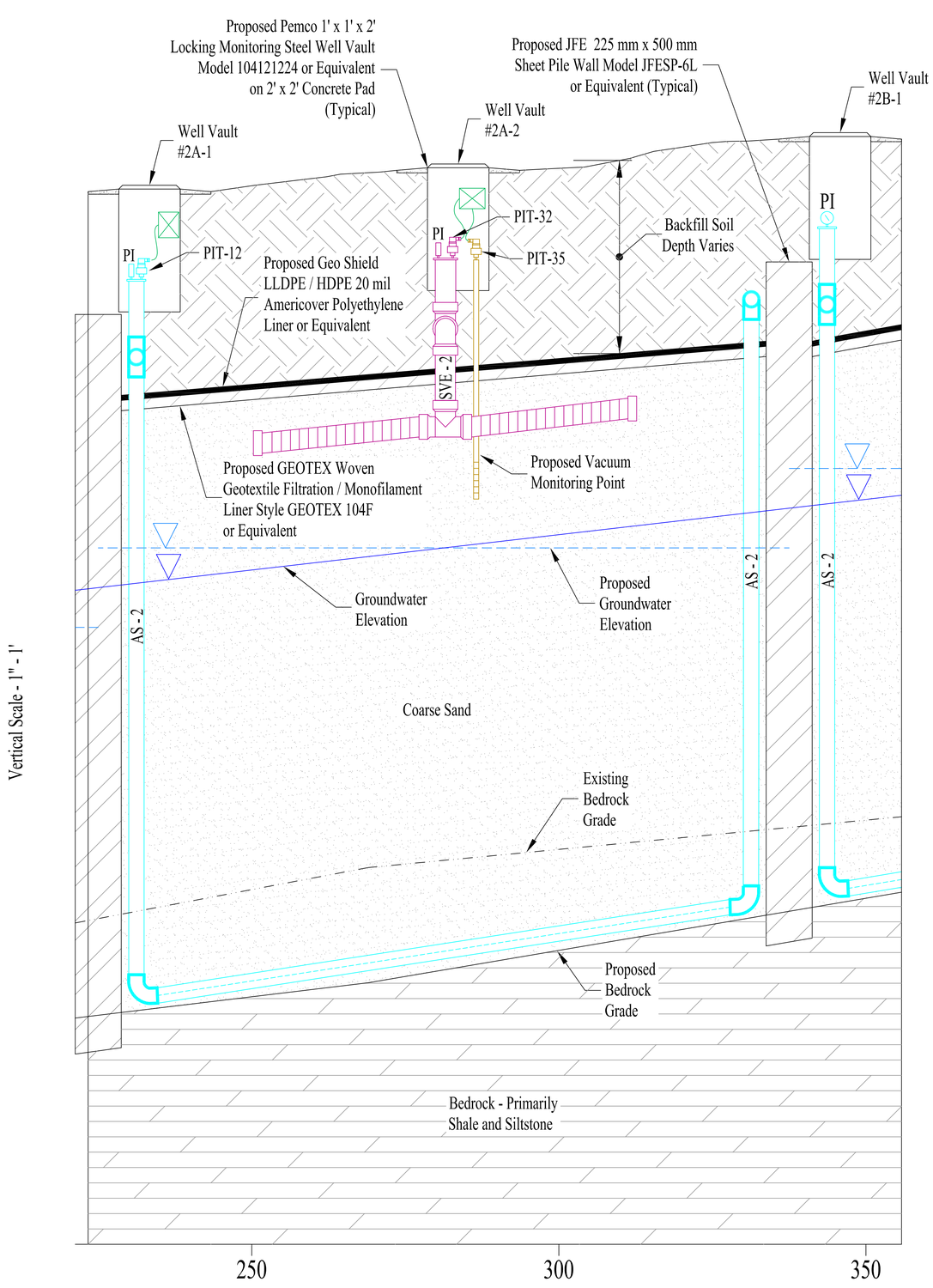

Note:
Well vaults, air sparging pipe systems, SVE pipe systems, vacuum monitoring points and electrical conduit systems are drawn based on the Vertical Scale of 1" - 1' in the cross section. Plan view not drawn to scale.

Horizontal Scale - 1" - 10'
Cross Section - Proposed Trench
Detail CS-3

CONESTOGA-ROVERS & ASSOCIATES

Source Reference: CRA SURVEY, JUNE 8-19, 2009. INDIANA WEST SPC, US SURVEY FEET.
Project Manager: G. WALTERS
Scale: VERTICAL 1" = 1' HORIZONTAL 1" = 10'
Reviewed By: G. WALTERS
Designed By: G. WALTERS
Drawn By: R. LEE
Date: MAY, 2010
Project No: 19190-02
Report No: 044
Drawing No: C1 - 11

RADIO MATERIALS CORPORATION
ATTICA, INDIANA

SVE AND AIR SPARGE TREATMENT SYSTEM

PROPOSED TRENCH CROSS SECTION AND PLAN VIEW DETAIL CS - 3

SCALE VERIFICATION
THIS BAR MEASURES 1" ON ORIGINAL. ADJUST SCALE ACCORDINGLY.

Approved

No	Revision	Date	Initial

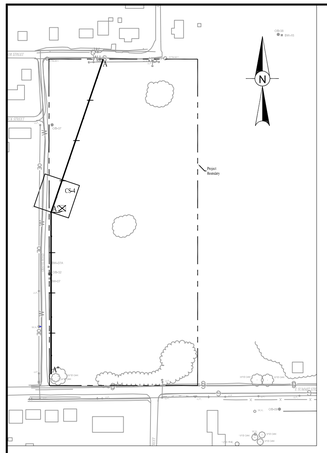

Legend:

- Proposed Soil Backfill
- Proposed Coarse Sand
- Proposed Concrete
- Bedrock - Shale and Siltstone
- Proposed Sheet Piling
- Proposed Polyethylene Liner
- Proposed Geotextile Fabric
- Proposed Water Treatment Levels
- Approximate Groundwater Elevation Based on Observations from Soil Borings
- Estimated Groundwater Levels after Placement of Sheet Pile Walls
- Proposed 3" Air Sparge HDPE Pipe
- Proposed 4" SVE PVC Pipe
- Proposed 1.5" Electrical Conduit
- Proposed 1" Vacuum Monitoring Point

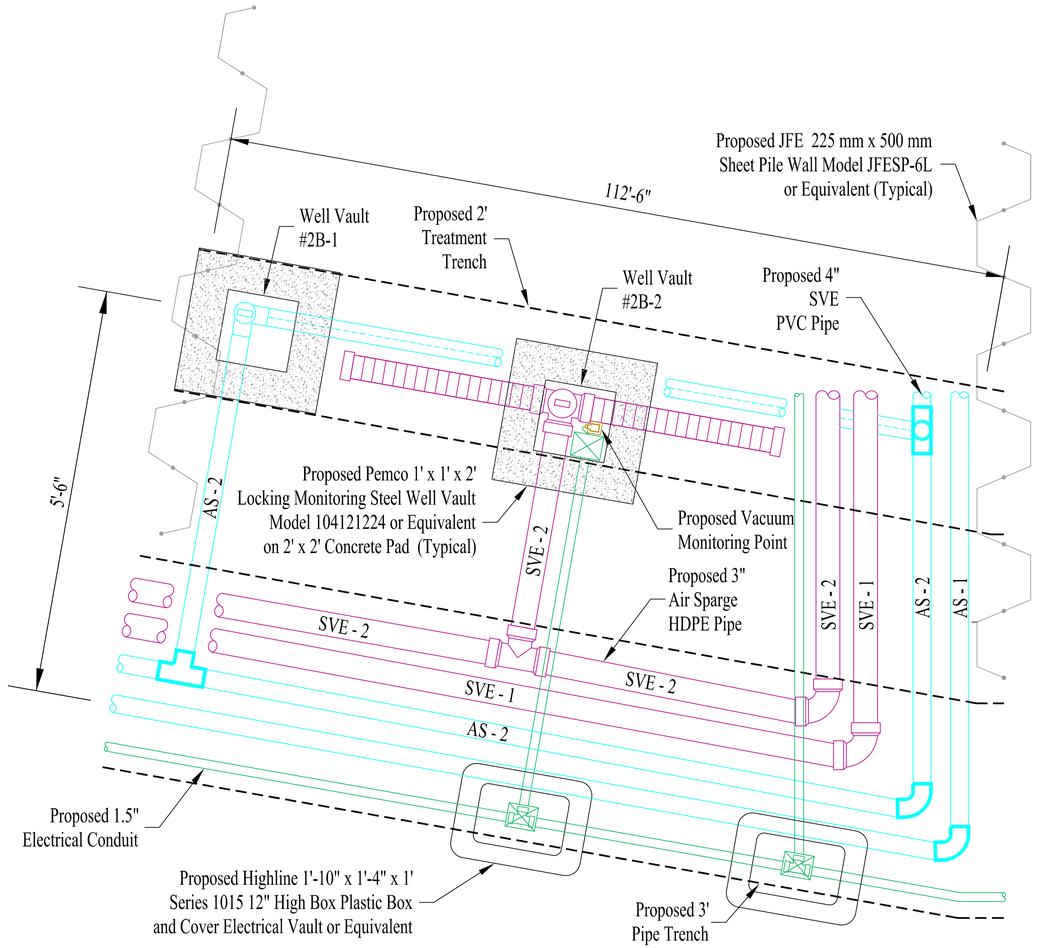

Not To Scale
Plan View - Proposed Trench
Detail CS-4

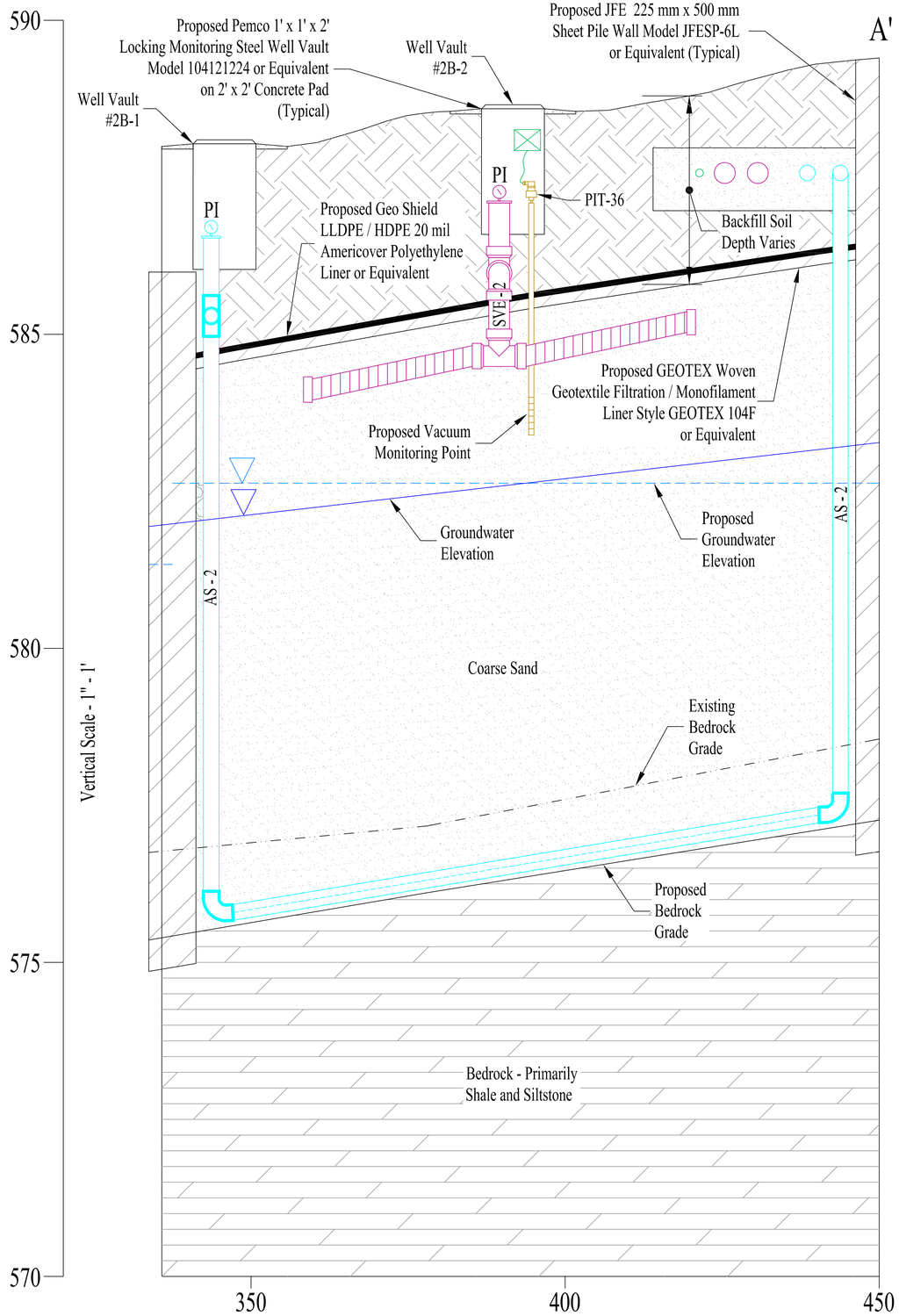

Horizontal Scale - 1" - 10'
Cross Section - Proposed Trench
Detail CS-4

Note:
Well vaults, air sparging pipe systems, SVE pipe systems, vacuum monitoring points and electrical conduit systems are drawn based on the Vertical Scale of 1" - 1' in the cross section. Plan view not drawn to scale.

CONESTOGA-ROVERS & ASSOCIATES

Source Reference: CRA SURVEY, JUNE 8-19, 2009, INDIANA WEST SPC, US SURVEY FEET.
Project Manager: G. VALTERS
Scale: VERTICAL 1" = 1' HORIZONTAL 1" = 10'
Reviewed By: G. VALTERS
Project No: 19190-02
Date: MAY, 2010
Designed By: G. VALTERS
Drawn By: R. LEE
Report No: 044
Drawing No: C1 - 12

RADIO MATERIALS CORPORATION
ATTICA, INDIANA

SVE AND AIR SPARGE TREATMENT SYSTEM

PROPOSED TRENCH CROSS SECTION AND PLAN VIEW DETAIL CS - 4

SCALE VERIFICATION
THIS BAR MEASURES 1" ON ORIGINAL. ADJUST SCALE ACCORDINGLY.

Approved

No	Revision	Date	Initial

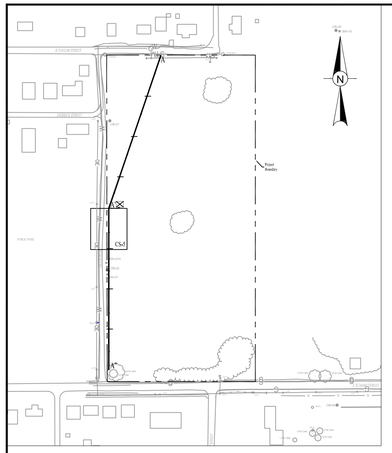

Legend:

- Proposed Soil Backfill
- Proposed Coarse Sand
- Proposed Concrete
- Bedrock - Shale and Siltstone
- Proposed Sheet Piling
- Proposed Polyethylene Liner
- Proposed Geotextile Fabric
- Proposed Water Treatment Levels
- Approximate Groundwater Elevation Based on Observations from Soil Borings
- Estimated Groundwater Levels after Placement of Sheet Pile Walls
- Proposed 3" Air Sparge HDPE Pipe
- Proposed 4" SVE PVC Pipe
- Proposed 1.5" Electrical Conduit
- Proposed 1" Vacuum Monitoring Point

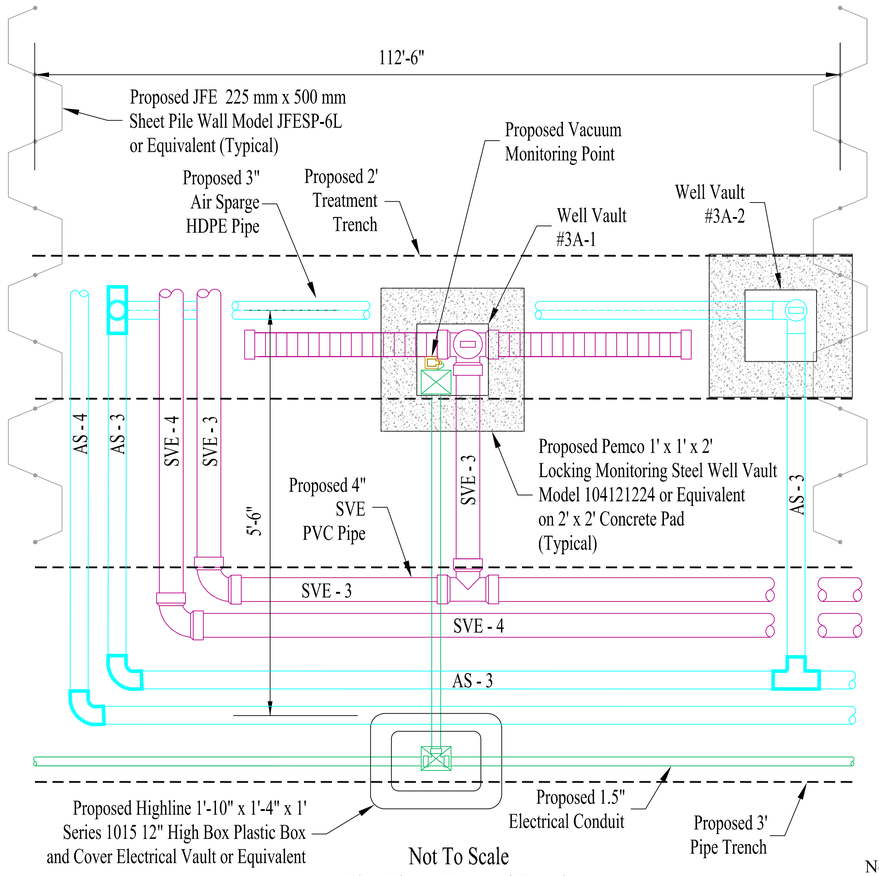

Not To Scale
Plan View - Proposed Trench
Detail CS-5

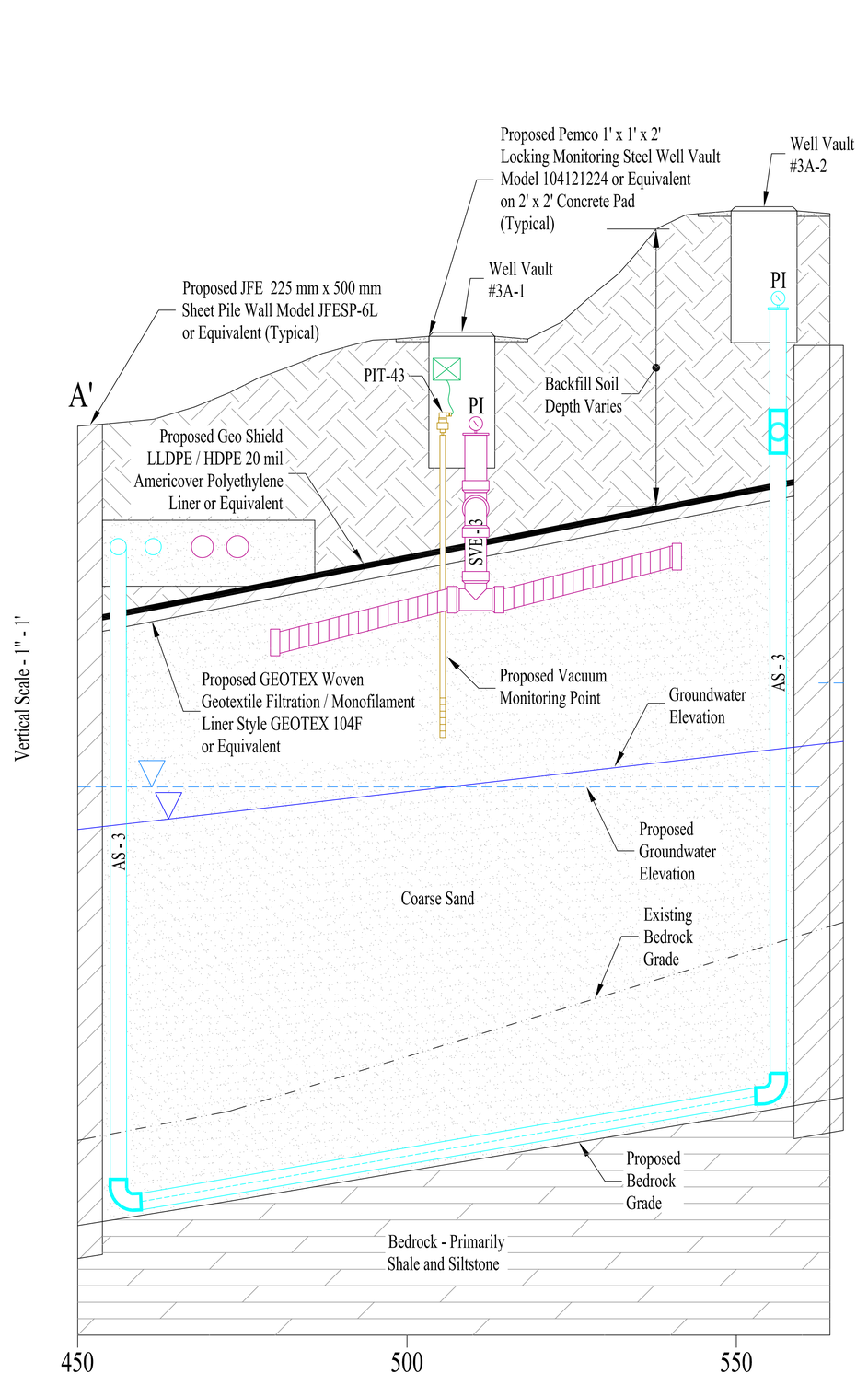

Horizontal Scale - 1" - 10'
Cross Section - Proposed Trench
Detail CS-5

Note:
Well vaults, air sparging pipe systems, SVE pipe systems, vacuum monitoring points and electrical conduit systems are drawn based on the Vertical Scale of 1" - 1' in the cross section. Plan view not drawn to scale.

CONESTOGA-ROVERS & ASSOCIATES

Source Reference: CRA SURVEY, JUNE 8-19, 2009. INDIANA WEST SPC, US SURVEY FEET.
Project Manager: G. WALTERS
Reviewed By: G. WALTERS
Designed By: G. WALTERS
Drawn By: R. LEE
Date: MAY, 2010
Project No: 19190-02
Report No: 044
Drawing No: C1 - 13
Scale: VERTICAL 1" = 1' HORIZONTAL 1" = 10'

RADIO MATERIALS CORPORATION
ATTICA, INDIANA

SVE AND AIR SPARGE TREATMENT SYSTEM

PROPOSED TRENCH CROSS SECTION AND PLAN VIEW DETAIL CS - 5

SCALE VERIFICATION
THIS BAR MEASURES 1" ON ORIGINAL. ADJUST SCALE ACCORDINGLY.

Approved

No | Revision | Date | Initial

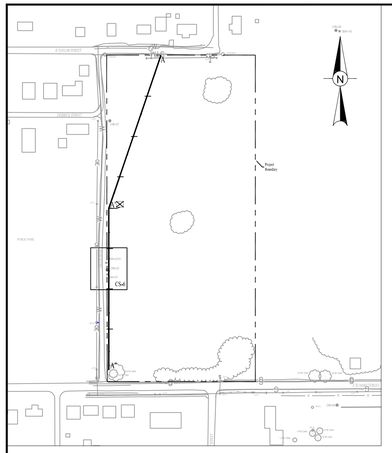

Legend:

- Proposed Soil Backfill
- Proposed Coarse Sand
- Proposed Concrete
- Bedrock - Shale and Siltstone
- Proposed Sheet Piling
- Proposed Polyethylene Liner
- Proposed Geotextile Fabric
- Proposed Water Treatment Levels
- Proposed 3" Air Sparge HDPE Pipe
- Proposed 4" SVE PVC Pipe
- Proposed 1.5" Electrical Conduit
- Proposed 1" Vacuum Monitoring Point
- Approximate Groundwater Elevation Based on Observations from Soil Borings
- Estimated Groundwater Levels after Placement of Sheet Pile Walls

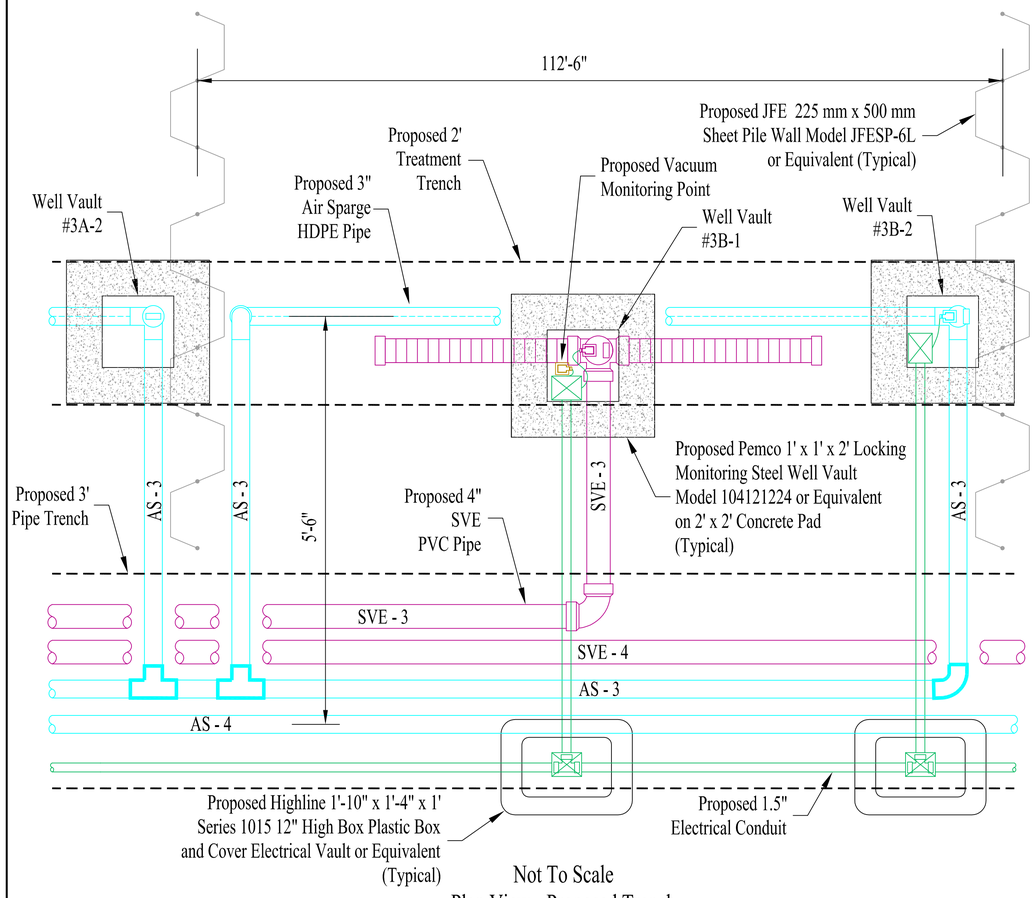

Not To Scale
Plan View - Proposed Trench
Detail CS-6

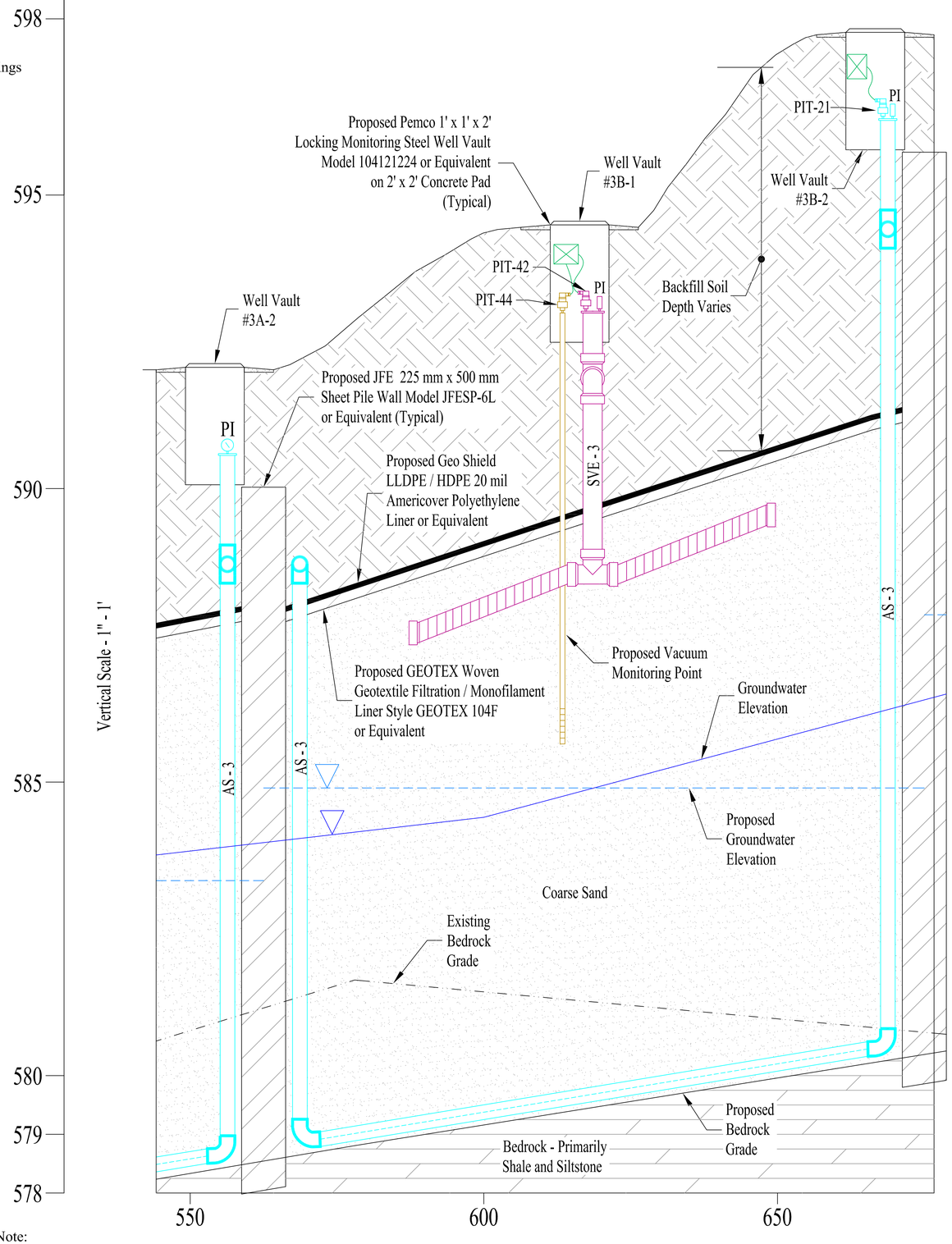

Note:
Well vaults, air sparging pipe systems, SVE pipe systems, vacuum monitoring points and electrical conduit systems are drawn based on the Vertical Scale of 1" - 1' in the cross section. Plan view not drawn to scale.

Horizontal Scale - 1" - 10'
Cross Section - Proposed Trench
Detail CS-6

CONESTOGA-ROVERS & ASSOCIATES

Source Reference: CRA SURVEY, JUNE 8-19, 2009, INDIANA WEST SPC, US SURVEY FEET.
Project Manager: G. VALTERS
Scale: VERTICAL 1" = 1' HORIZONTAL 1" = 10'
Reviewed By: G. VALTERS
Designed By: G. VALTERS
Drawn By: R. LEE
Date: MAY, 2010
Project No: 19190-02
Report No: 044
Drawing No: C1 - 14

RADIO MATERIALS CORPORATION
ATTICA, INDIANA

SVE AND AIR SPARGE TREATMENT SYSTEM

PROPOSED TRENCH CROSS SECTION AND PLAN VIEW DETAIL CS - 6

SCALE VERIFICATION
THIS BAR MEASURES 1" ON ORIGINAL. ADJUST SCALE ACCORDINGLY.

Approved

No	Revision	Date	Initial

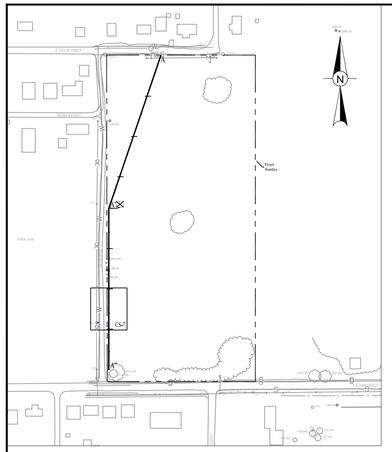

Note:
Well vaults, air sparging pipe systems, SVE pipe systems, vacuum monitoring points and electrical conduit systems are drawn based on the Vertical Scale of 1" - 1' in the cross section. Plan view not drawn to scale.

Legend:

- Proposed Soil Backfill
- Proposed Coarse Sand
- Proposed Concrete
- Bedrock - Shale and Siltstone
- Proposed Sheet Piling
- Proposed Polyethylene Liner
- Proposed Geotextile Fabric
- Proposed Water Treatment Levels
- Proposed 3" Air Sparge HDPE Pipe
- Proposed 4" SVE PVC Pipe
- Proposed 1.5" Electrical Conduit
- Proposed 1" Vacuum Monitoring Point
- Approximate Groundwater Elevation Based on Observations from Soil Borings
- Estimated Groundwater Levels after Placement of Sheet Pile Walls

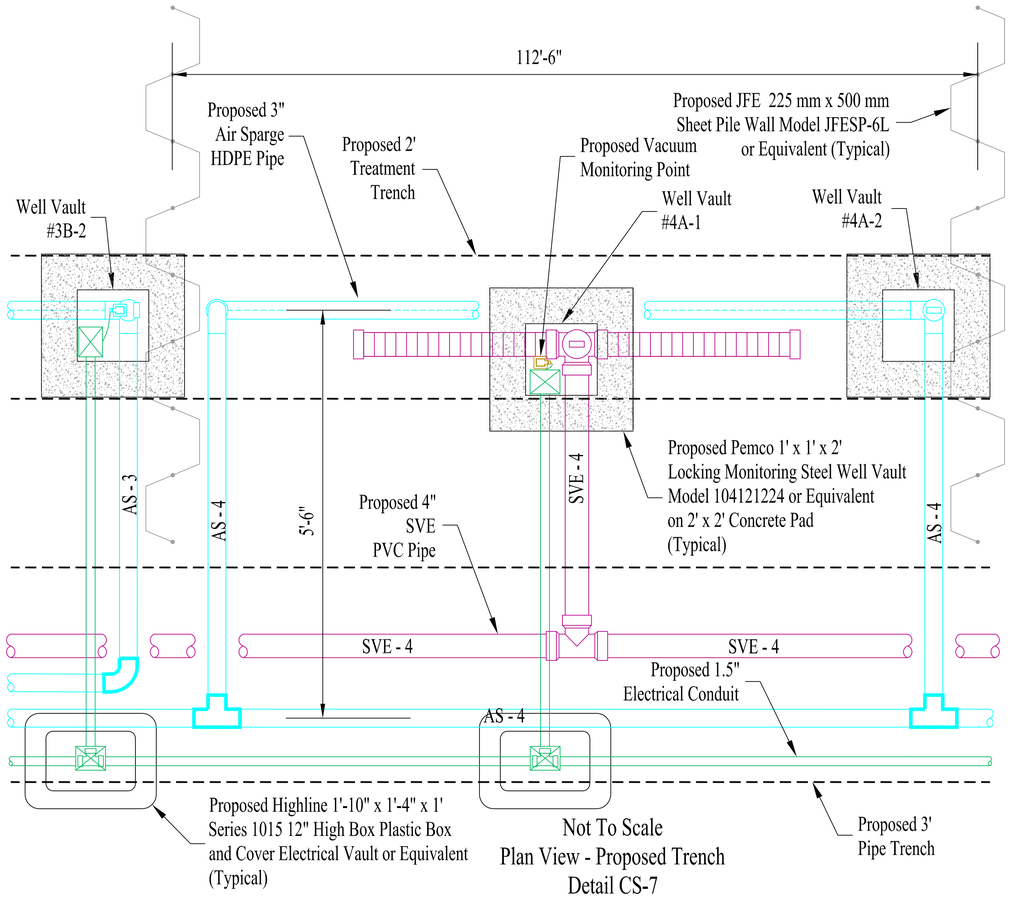

Not To Scale
Plan View - Proposed Trench
Detail CS-7

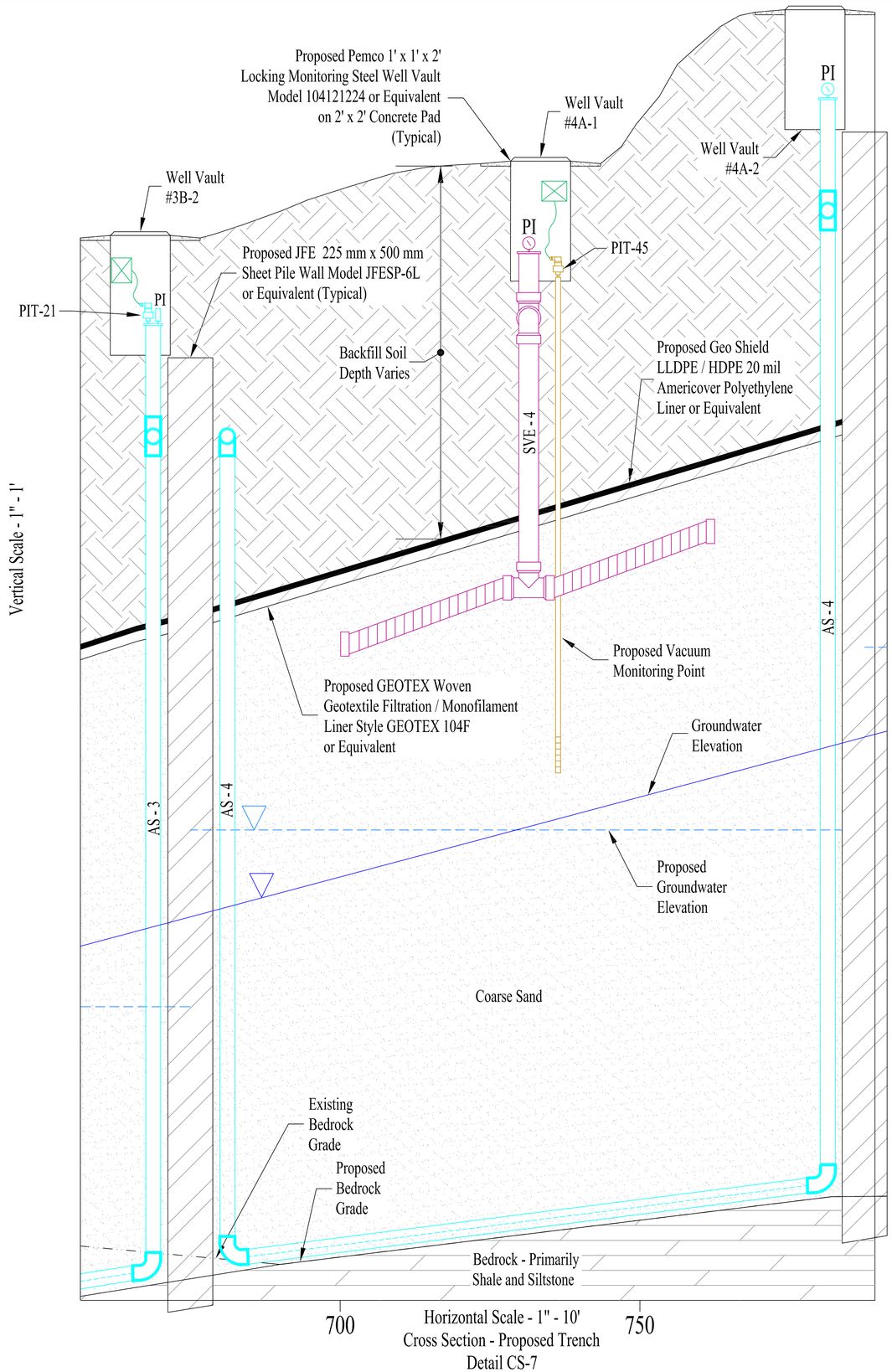

Horizontal Scale - 1" - 10'
Cross Section - Proposed Trench
Detail CS-7

CONESTOGA-ROVERS & ASSOCIATES

Source Reference: CRA SURVEY, JUNE 8-19, 2009. INDIANA WEST SPC, US SURVEY FEET.	Date: MAY, 2010
Project Manager: G. WALTERS	Designed By: G. WALTERS	Drawn By: R. LEE
Reviewed By: G. WALTERS	Project No: 19190-02	Report No: 044	Drawing No: C1 - 15
Scale: VERTICAL 1" = 1' HORIZONTAL 1" = 10'	Approved

RADIO MATERIALS CORPORATION
ATTICA, INDIANA

SVE AND AIR SPARGE TREATMENT SYSTEM

PROPOSED TRENCH CROSS SECTION AND PLAN VIEW DETAIL CS - 7

SCALE VERIFICATION
THIS BAR MEASURES 1" ON ORIGINAL. ADJUST SCALE ACCORDINGLY.

No	Revision	Date	Initial

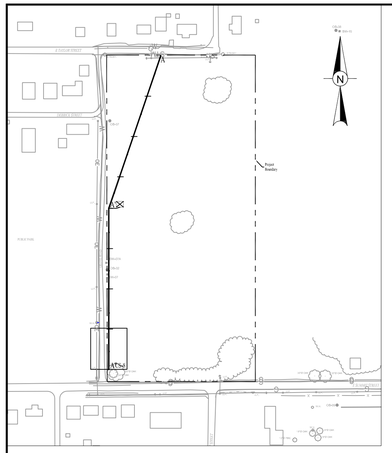

Legend:

- Proposed Soil Backfill
- Proposed Coarse Sand
- Proposed Coarse Sand
- Bedrock - Shale and Siltstone
- Proposed Sheet Piling
- Proposed Polyethylene Liner
- Proposed Geotextile Fabric
- Proposed Water Treatment Levels
- Proposed 3" Air Sparge HDPE Pipe
- Proposed 4" SVE PVC Pipe
- Proposed 1.5" Electrical Conduit
- Proposed 1" Vacuum Monitoring Point
- Approximate Groundwater Elevation Based on Observations from Soil Borings
- Estimated Groundwater Levels after Placement of Sheet Pile Walls

Note:
Well vaults, air sparging pipe systems, SVE pipe systems, vacuum monitoring points and electrical conduit systems are drawn based on the Vertical Scale of 1" - 1' in the cross section. Plan view not drawn to scale.

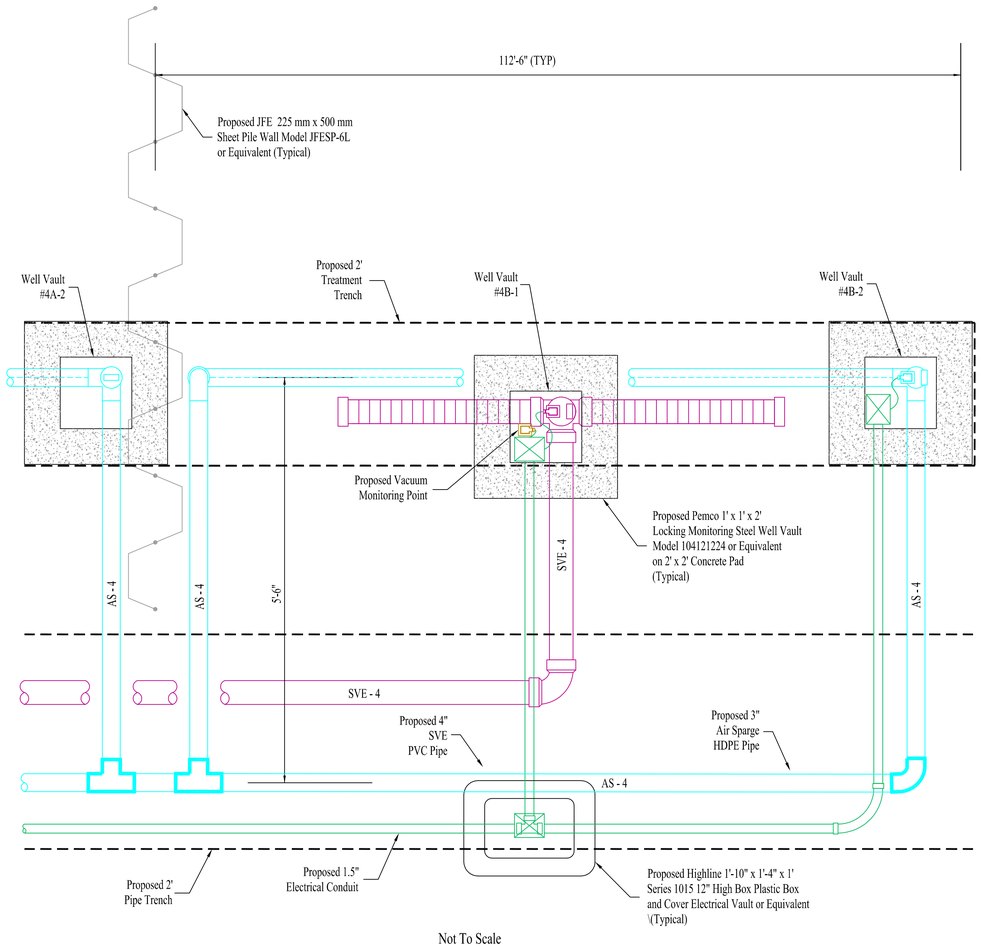

Not To Scale
Plan View - Proposed Trench
Detail CS-8

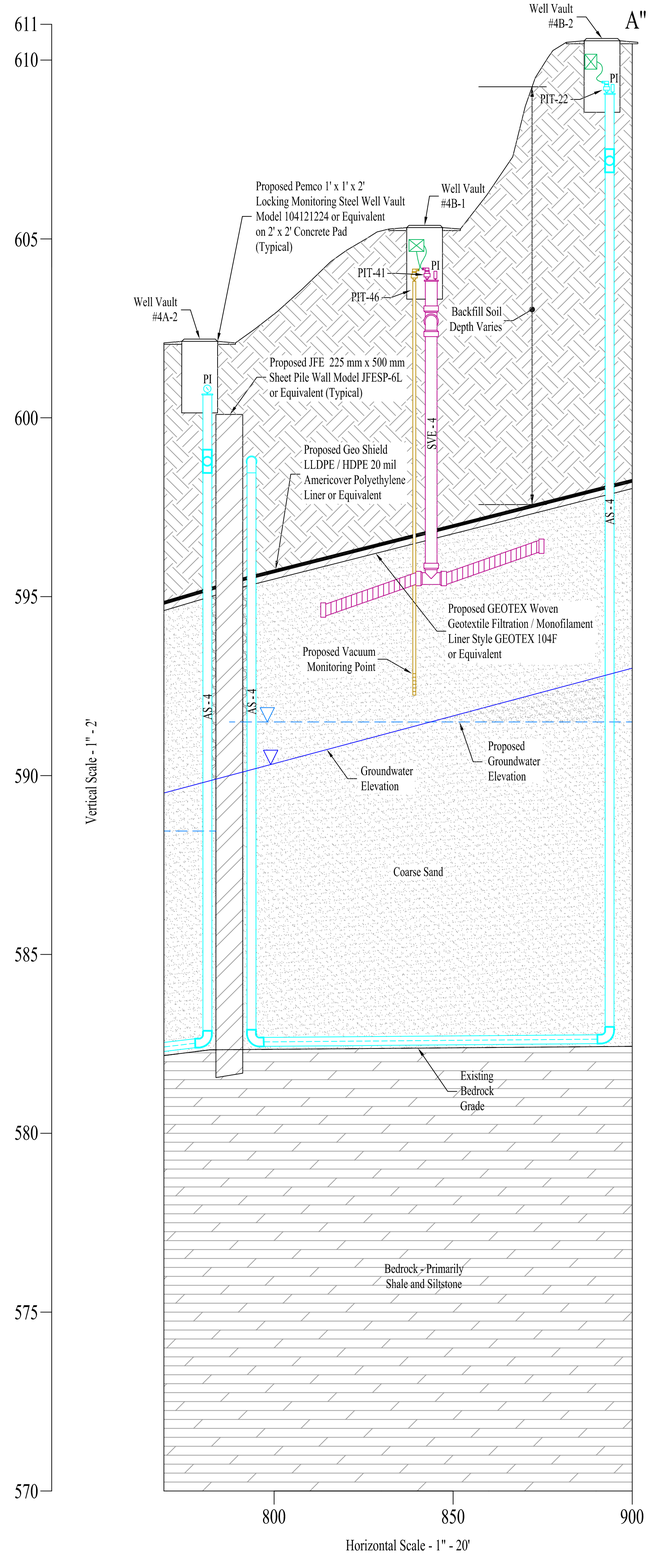

Horizontal Scale - 1" - 20'
Cross Section - Proposed Trench
Detail CS-8

CONESTOGA-ROVERS & ASSOCIATES

RADIO MATERIALS CORPORATION
ATTICA, INDIANA

SVE AND AIR SPARGE TREATMENT SYSTEM

PROPOSED TRENCH CROSS SECTION AND PLAN VIEW DETAIL CS - 8

Source Reference: CRA SURVEY, JUNE 8-19, 2009, INDIANA WEST SPC, US SURVEY FEET.	Date: MAY, 2010
Project Manager: G. WALTERS	Reviewed By: G. WALTERS
Designed By: G. WALTERS	Drawn By: R. LEE
Scale: VERTICAL 1" = 2' HORIZONTAL 1" = 20'	Project No: 19190-02
Report No: 044	Drawing No: C1 - 16

SCALE VERIFICATION
THIS BAR MEASURES 1" ON ORIGINAL. ADJUST SCALE ACCORDINGLY.

Approved

No	Revision	Date	Initial

Air Sparge Vault Detail
8 - Typical
Scale - 1" = 1'

SVE - Vacuum Monitoring Point
Vault Detail
8 - Typical
Scale - 1" = 1'

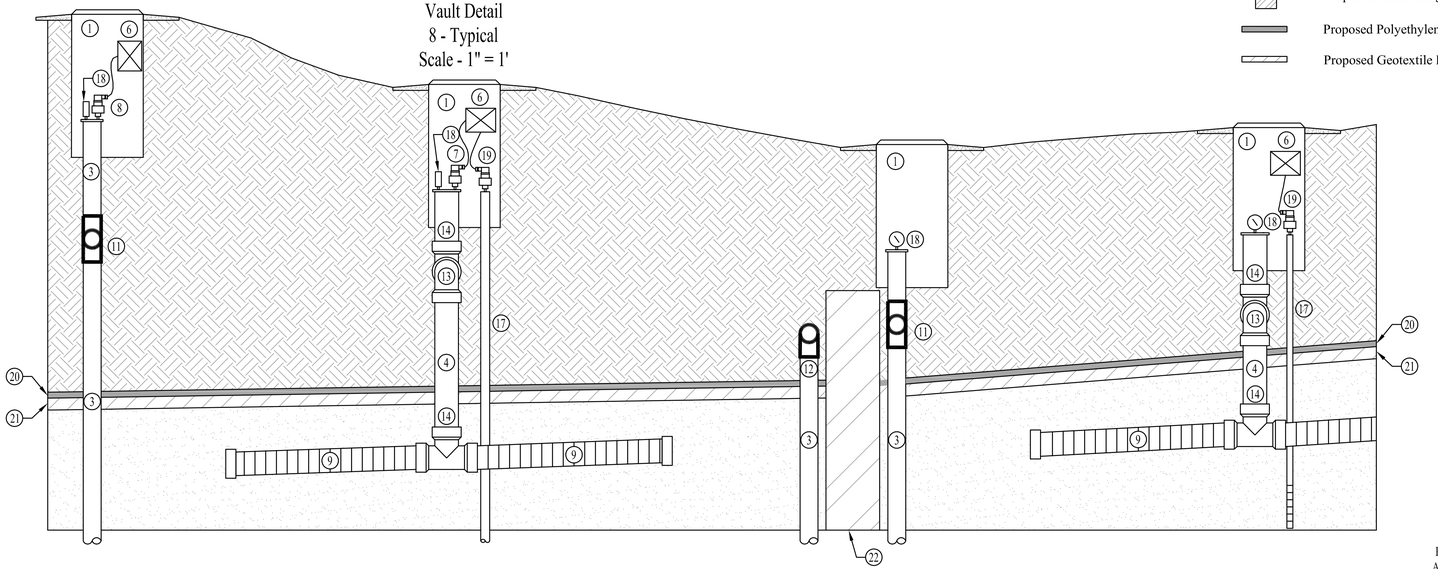

Air Sparge - SVE Vault Detail
Cross Section and Plan View
Scale - 1" = 1'

Legend:

- Proposed Soil Backfill
- Proposed Pea Gravel
- Proposed Sheet Piling
- Proposed Polyethylene Liner
- Proposed Geotextile Fabric

Bill of Materials		
Item	Description	Quantity
1	Pemco Model 104121224 1' x 1' x 2' Steel Well Vault or Equivalnet	16
2	Highline Series 1015 1'-10" x 1'-4" x 1' HDPE Electrical Box or Equivalent	12
3	3" HDPE SDR-11	As Needed
4	4" Schedule 40 PVC	As Needed
5	1.5" Electrical Conduit	As Needed
6	Wiegmann Wall Mount Type I 1ZGY6 5" x 4" x 3" Electrical Junction Box or Equivalent	23
7	NoShok Series 600 Pressure Indicating Transducer for SVE Pipe System or Equivalent	4
8	NoShok Series 600 Pressure Indicating Transducer for Air Sparge Pipe System or Equivalent	4
9	4" Schedule 40 PVC, 0.010" Slotted	As Needed
10	Air Diffusion Systems Aeration Sparge Pipe 3" HDPE SDR-11, Slotted Air Diffussion System, Special Order	As Needed
11	3" HDPE SDR-11, Tee	20
12	3" HDPE SDR-11, EL-90°	38
13	4" Schedule 40 PVC, EL-90°	16
14	4" Schedule 40 PVC, Tee	20
15	1.5" Electrical Tee	11
16	1.5" Sweeping Bend	4
17	1" Vacuum Monitoring Point	As Needed
18	McDaniel 2 1/2" Model J 1/4" NPT Stainless Steel Case Gauge or Equivalnet for Air Sparge / SVE Pipe Systems	16
19	NoShok Series 600 Pressure Indicating Transducer for Vacuum Monitoring Point or Equivalent	8
20	Geo Shield LLDPE/HDPE 20 mil Americover Polyethylene Liner or Equivalent	As Needed
21	GEOTEX Geotextile Filtration/Monofilament GEOTEX 104F or Equivalent	As Needed
22	JFE 225 mm x 500mm Sheet Pile Wall Model JFESP-6L or Equivalent	As Needed

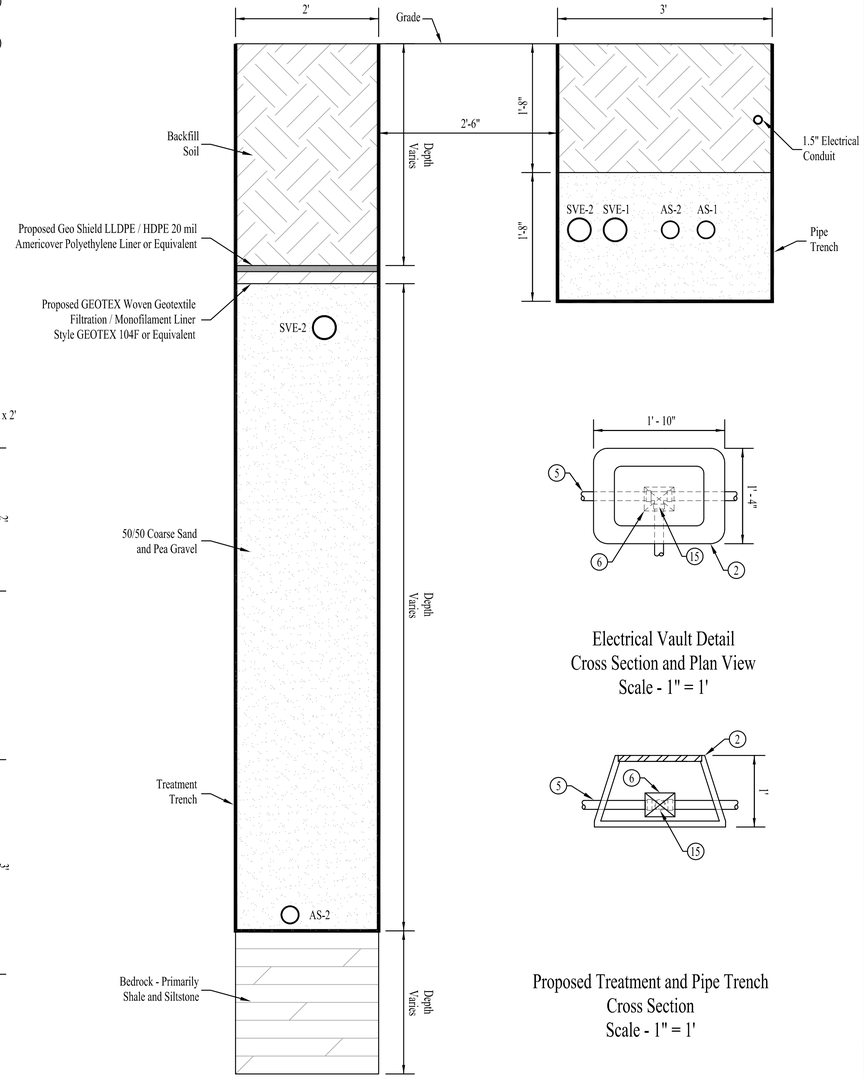

Proposed Treatment and Pipe Trench
Cross Section
Scale - 1" = 1'

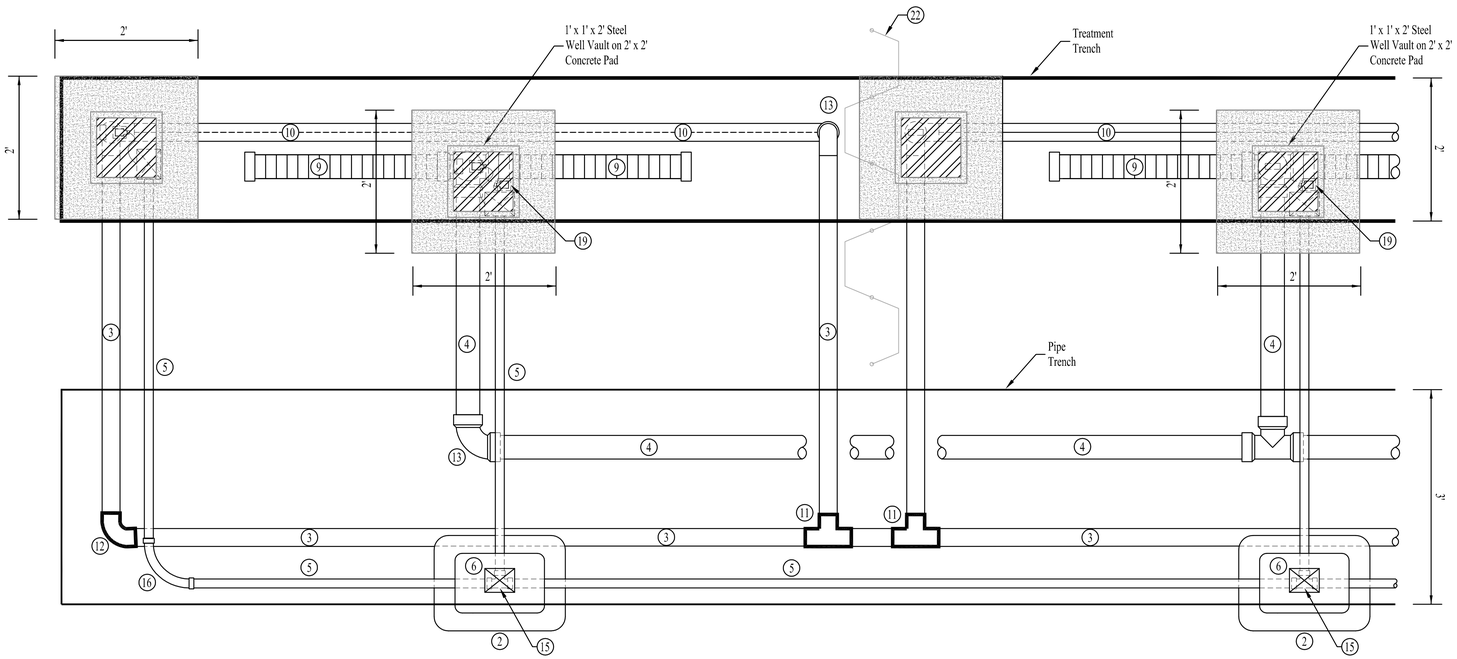

Electrical Vault Detail
16 Typical
Scale - 1" = 1'

Electrical Vault Detail
Cross Section and Plan View
Scale - 1" = 1'

Proposed Treatment and Pipe Trench
Cross Section
Scale - 1" = 1'

CONESTOGA-ROVERS & ASSOCIATES

Source Reference: CRA SURVEY, JUNE 8-19, 2009 INDIANA WEST SPC, US SURVEY FEET.
Project Manager: G. VALTERS
Reviewed By: G. VALTERS
Project No: 19190-02
Scale: 1" = 1'
Date: MAY, 2010
Designed By: G. VALTERS
Drawn By: R. LEE
Report No: 044
Drawing No: C1 - 17

RADIO MATERIALS CORPORATION
ATTICA, INDIANA

SVE AND AIR SPARGE TREATMENT SYSTEM

WELL VAULT AND
TREATMENT-PIPE TRENCH DETAILS

SCALE VERIFICATION
THIS BAR MEASURES 1" ON ORIGINAL. ADJUST SCALE ACCORDINGLY.

Approved

No	Revision	Date	Initial

PROCESS / INSTRUMENT LINES

- MAIN PROCESS LINE
- SECONDARY PROCESS LINE
- UNDEFINED SIGNAL
- PNEUMATIC SIGNAL
- ELECTRICAL SIGNAL
- CAPILLARY TUBE, FILLED SYSTEM
- ELECTROMAGNETIC OR SONIC SIGNAL (GUIDED)
- ELECTROMAGNETIC OR SONIC SIGNAL (NOT GUIDED)
- INTERNAL SYSTEM LINK
- HYDRAULIC SIGNAL
- MECHANICAL LINK
- ELECTRICAL BINARY SIGNAL
- TO / FROM SHEET No. — OFF PAGE CONNECTOR
- UTILITY — UTILITY IN/OUT
- 2 / I — HARDWIRED INTERLOCK LOGIC (-1,2,3...IS OPTIONAL REFERENCE TO INTERLOCK DETAIL DESCRIPTION)

VALVE SYMBOLS

- BA- * — BALL VALVE
- BU- * — BUTTERFLY VALVE
- CH- * — CHECK VALVE
- GA- * — GATE VALVE
- GL- * — GLOBE VALVE
- THREE WAY VALVE (FAIL OPEN TO PATH A-C)
- FOUR WAY VALVE (FAIL OPEN TO PATH A-C AND B-D)
- DAMPER OR LOUVER

GENERAL INSTRUMENT SYMBOLS

- LOCALLY MOUNTED INSTRUMENTS
- PRIMARY PANEL MOUNTED INSTRUMENTS
- AUXILARY PANEL MOUNTED INSTRUMENTS WHERE x = PANEL No. WHEN MORE THAN ONE PANEL IS PRESENT (IPx)
- BEHIND BOARD MOUNTED INSTRUMENTS
- INSTRUMENTS SHARING COMMON HOUSING
- IN LINE INSTRUMENTS AS INDENTIFIED
- XY — SIGNAL CONVERTER (INPUT/OUTPUT)
  - * E - VOLTAGE, I - CURRENT, P - PNEUMATIC, B - BINARY (MODBUS, RS232...)
- COLOR — PILOT LIGHT
  - A = AMBER, B = BLUE, C = CLEAR, G = GREEN, R = RED, W = WHITE, Y = YELLOW

DISTRIBUTED CONTROL / SHARED DISPLAY INSTRUMENTS

- INDICATOR/CONTROLLER/RECORDER OR ALARM POINTS - USUALLY USED TO INDICATE VIDEO DISPLAY (DCS OR HMI CONFIGURATIONS) * NORMALLY ACCESSIBLE TO OPERATOR
- NORMALLY BLIND OPERATION * NOT NORMALLY ACCESSIBLE TO OPERATOR
- DISTRIBUTED CONTROL INTERCONNECTING LOGIC CONTROLLER OR PLC WITH BINARY OR SEQUENTIAL LOGIC FUNCTIONS. * NORMALLY ACCESSIBLE TO OPERATOR

- NORMALLY BLIND OPERATION * NOT NORMALLY ACCESSIBLE TO OPERATOR
- I PLCx — INTERLOCK LOGIC IN CONTROLLER OR PLC WHERE: - 1,2,3.....IS OPTIONAL REFERENCE TO INTERLOCK DETAIL DESCRIPTION - x = PLC No. WHEN MORE THAN ONE PLC IS PRESENT IN THE SYSTEM

MISCELLANEOUS SYMBOLS

- REDUCER
- FLEXIBLE PIPE
- EXPANSION JOINT
- BLIND FLANGE
- HOSE CONNECTION
- SCREWED CAP, CLEANOUT
- Y-LINE STRAINER
- SPECIFICATION CHANGE
- FUNNEL DRAIN
- STATIC MIXER
- FILTER/REGULATOR/LUBRICATOR
- ANNUNCIATOR HORN
- FILTER/REGULATOR
- X" — EQUIPMENT INSULATED WITH X" OF INSULATION
- R — RESET FOR LATCH-TYPE ACTUATOR
- VENT — OPEN VENT TO ATMOSPHERE
- INLINE BLANK
- RESTRICTION ORIFICE
- AIR EJECTOR
- T — TRAP
- PULSATION DAMPER
- BB — BLOCK & BLEED ASSEMBLY
- TP 1 — TIE POINT TO EXISTING SYSTEM
- DRAIN (FLOOR, SEWER, ETC.)
- FLOW STRAIGHTENING VANE
- SP 4 — SPECIALITY PART
- AV — AIR VENT, AUTOMATIC
- SLUICE GATES
- AIR FILTER

SELF-ACTUATED REGULATORS, VALVES, AND OTHER DEVICES

- PRESSURE RELIEF VALVE
- VACUUM RELIEF VALVE
- PRESSURE REDUCING REGULATOR (SELF CONTAINED)
- BACKPRESSURE REGULATOR (SELF CONTAINED)

- V P — CONSERVATION VENT
- XF — FLAME ARRESTOR

PRIMARY ELEMENT SYMBOLS

- FI — VARIABLE AREA FLOWMETER
- PI — DIAPHRAM SEAL WITH PRESSURE LEAD LINE
- PI — DIAPHRAM SEAL (LINE-MOUNTED)
- TE RTD — TEMPERATURE ELEMENT WITH THERMOWELL (OPTIONAL ELEMENT DESCRIPTION RTD, TYPE K...)
- FG — FLOW SIGHT GLASS (LG - LEVEL SIGHT GLASS, SG - GENERAL SIGHT GLASS)
- LEVEL DEVICE, FLOAT TYPE

ACTUATOR SYMBOLS

- DIAPHRAM ACTUATOR
- CYLINDER ACTUATOR
- M — ROTARY MOTOR ACTUATOR
- S — SOLENOID ACTUATOR
- HAND ACTUATOR OR HANDWHEEL
- D — AIR ACTUATED VALVE W/POSITIONER
  OPTIONAL:
  D - DIRECT ACTING POSITIONER
  R - REVERSE ACTING POSITIONER

VALVE FAIL SYMBOLS
FO - FAIL OPEN
FC - FAIL CLOSED
FL - FAIL LOCKED (LAST POSITION)
FI - FAIL INDETERMINATE

- FC
- ZSL — LIMIT SWITCH ACTIVATED WHEN VALVE CLOSED (ZSH ACTIVATED WHEN VALVE OPEN)

ABBREVIATIONS:

POWER SUPPLY OR PURGE FLUID TYPES

AS - AIR SUPPLY
- IA - INSTRUMENT AIR
- PA - PLANT AIR

ES - ELECTRICAL SUPPLY
GS - GAS SUPPLY
HS - HYDRAULIC SUPPLY
NS - NITROGEN SUPPLY
SS - STEAM SUPPLY
WS - WATER SUPPLY

THE SUPPLY LEVEL MAY BE ADDED TO THE INSTRUMENT SUPPLY LINE, E.G., AG-100, A 100-PSI AIR SUPPLY; ES-24DC, A 24-VOLT DIRECT CURRENT POWER SUPPLY.

INSTRUMENT / PROCESS LINES DESIGNATIONS

000	UNDERGROUND INSTRUMENTS
100	PROCESS INSTRUMENTS
200	VENDOR SUPPLIED INSTRUMENTS
300	UTILITY INSTRUMENTS
0000	UNDERGROUND LINES
1000	PROCESS LINES
2000	VENDOR SUPPLIED LINES
3000	UTILITY LINES
CS	CARBON STEEL PIPE
CSVD	CARBON STEEL VENT DUCT (12 GAUGE)
DVW	DRAIN VENT WASTE PIPE
HDPE	HIGH DENSITY POLYETHYLENE PIPE
KYA	KYNAR
PDE	CPVC, SOLID
PVC	POLYVINYL CHLORIDE PIPE SCHEDULE 40
PVE	POLYVINYL CHLORIDE PIPE SCHEDULE 80
PPL	POLYPROPYLENE LINED/LINED DUCTILE PIPE
SS	STAINLESS STEEL
TFD	TEFLON
B	BARE
I	INSULATED
J	JACKETED AND INSULATED
TE	ELECTRICALLY TRACED AND INSULATED

INSTRUMENTS:

HOA - HAND/OFF/AUTO
LOR - LOCAL/OFF/REMOTE
OPN - OPEN
CLS - CLOSE
SP - SETPOINT

TYPICAL ISA LETTER COMBINATIONS

First-Letters	Initiating or Measured Variable	Controllers: Recording	Controllers: Indicating	Controllers: Blind	Controllers: Self-Actuated Control Valves	Readout Devices: Recording	Readout Devices: Indicating	Switches and Alarm Devices *: High **	Switches and Alarm Devices *: Low	Switches and Alarm Devices *: Comb	Transmitters: Recording	Transmitters: Indicating	Transmitters: Blind	Solenoids, Relays, Computing Devices	Primary Element	Test Point	Well or Probe	Viewing Device, Glass	Safety Device	Final Element
A	Analysis	ARC	AIC	AC		AR	AI	ASH	ASL	ASHL	ART	AIT	AT	AY	AE	AP	AW			AV
B	Burner/Combustion	BRC	BIC	BC		BR	BI	BSH	BSL	BSHL	BRT	BIT	BT	BY	BE		BW	BG		BZ
C	User's Choice																			
D	User's Choice																			
E	Voltage	ERC	EIC	EC		ER	EI	ESH	ESL	ESHL	ERT	EIT	ET	EY	EE					EZ
F	Flow Rate	FRC	FIC	FC	FCV, FICV	FR	FI	FSH	FSL	FSHL	FRT	FIT	FT	FY	FE	FP		FG		FV
FQ	Flow Quantity	FQRC	FQIC			FQR	FQI	FQSH	FQSL			FQIT	FQT	FQY	FQE					FQV
FF	Flow Ratio	FFRC	FFIC	FFC		FFR	FFI	FFSH	FFSL						FE					FFV
G	User's Choice																			
H	Hand		HIC	HC						HS										HV
I	Current	IRC	IIC			IR	II	ISH	ISL	ISHL	IRT	IIT	IT	IY	IE					IZ
J	Power	JRC	JIC			JR	JI	JSH	JSL	JSHL	JRT	JIT	JT	JY	JE					JV
K	Time	KRC	KIC	KC	KCV	KR	KI	KSH	KSL	KSHL	KRT	KIT	KT	KY	KE					KV
L	Level	LRC	LIC	LC	LCV	LR	LI	LSH	LSL	LSHL	LRT	LIT	LT	LY	LE		LW	LG		LV
M	User's Choice																			
N	User's Choice																			
O	User's Choice																			
P	Pressure/Vacuum	PRC	PIC	PC	PCV	PR	PI	PSH	PSL	PSHL	PRT	PIT	PT	PY	PE	PP			PSV-PSE	PV
PD	Pressure, Differential	PDRC	PDIC	PDC	PDCV	PDR	PDI	PDSH	PDSL		PDRT	PDIT	PDT	PDY	PE	PP				PDV
Q	Quantity	QRC	QIC			QR	QI	QSH	QSL	QSHL	QRT	QIT	QT	QY	QE					QZ
R	Radiation	RRC	RIC	RC		RR	RI	RSH	RSL	RSHL	RRT	RIT	RT	RY	RE		RW			RZ
S	Speed/Frequency	SRC	SIC	SC	SCV	SR	SI	SSH	SSL	SSHL	SRT	SIT	ST	SY	SE					SV
T	Temperature	TRC	TIC	TC	TCV	TR	TI	TSH	TSL	TSHL	TRT	TIT	TT	TY	TE	TP	TW		TSE	TV
TD	Temperature, Differential	TDRC	TDIC	TDC	TDCV	TDR	TDI	TDSH	TDSL		TDRT	TDIT	TDT	TDY	TE	TP	TW			TDV
U	Multivariable					UR	UI							UY						UV
V	Vibration/Machinery Analysis					VR	VI	VSH	VSL	VSHL	VRT	VIT	VT	VY	VE					VZ
W	Weight/Force	WRC	WIC	WC	WCV	WR	WI	WSH	WSL	WSHL	WRT	WIT	WT	WY	WE					WZ
WD	Weight/Force, Differential	WDRC	WDIC	WDC	WDCV	WDR	WDI	WDSH	WDSL		WDRT	WDIT	WDT	WDY	WE					WDZ
X	Unclassified																			
Y	Event/State/Presence		YIC	YC		YR	YI	YSH	YSL				YT	YY	YE					YZ
Z	Position/Dimension	ZRC	ZIC	ZC	ZCV	ZR	ZI	ZSH	ZSL	ZSHL	ZRT	ZIT	ZT	ZY	ZE					ZV
ZD	Gauging/Deviation	ZDRC	ZDIC	ZDC	ZDCV	ZDR	ZDI	ZDSH	ZDSL		ZDRT	ZDIT	ZDT	ZDY	ZDE					ZDV

Note: This table is not all-inclusive.
* A alarm, the annunciating device, may be used in the same fashion as S, switch, the actuating device.

** The letters H and L may be omitted in the undefined case.

Other Possible Combinations:
FO (Restriction Orifice) FRK, HK (Control Stations) LLH (Level Light High) LCH (Level Control High) KQI (Running Time Indicator) HMS (Hand Momentary Switch) LCL (Level Control Low)

IDENTIFICATION LETTERS

	FIRST-LETTER: MEASURED OR INITIATING VARIABLE	FIRST-LETTER: MODIFIER	SUCCEEDING-LETTERS: READOUT OR PASSIVE FUNCTION	SUCCEEDING-LETTERS: OUTPUT FUNCTION	SUCCEEDING-LETTERS: MODIFIER
A	Analysis		Alarm		
B	Burner/Combustion		User's Choice	User's Choice	User's Choice
C	User's Choice			Control	
D	User's Choice	Differential			
E	Voltage		Sensor (Primary Element)		
F	Flow Rate	Ratio (Fraction)			
G	User's Choice		Glass, Viewing Device		
H	Hand				High
I	Current (Electrical)		Indicate		
J	Power	Scan			
K	Time, Time Schedule	Time Rate of Change		Control Station	
L	Level		Light		Low
M	User's Choice	Momentary			Middle, Intermediate
N	User's Choice		User's Choice	User's Choice	User's Choice
O	User's Choice		Orifice, Restriction		
P	Pressure, Vacuum		Point (Test) Connection		
Q	Quantity	Integrate, Totalize			
R	Radiation		Record		
S	Speed, Frequency	Safety		Switch	
T	Temperature			Transmit	
U	Multivariable		Multifunction	Multifunction	Multifunction
V	Vibration, Machinery Analysis			Valve, Damper, Louver	
W	Weight, Force		Well		
X	Unclassified	X Axis	Unclassified	Unclassified	Unclassified
Y	Event, State, or Presence	Y Axis		Relay, Compute, Convert	
Z	Position, Dimension	Z Axis		Driver, Actuator, Unclassified Final Control Element	

CONESTOGA-ROVERS & ASSOCIATES

Date: MAY, 2010
Drawn By: ---
Designed By: ---
Report No: 044
Drawing No: EF - 01
Source Reference: CRA SURVEY, JUNE 8-19, 2009, INDIANA WEST SPC, US SURVEY FEET.
Project Manager: G. WALTERS
Reviewed By: G. WALTERS
Project No: 19190-02
Scale: NONE

RADIO MATERIALS CORPORATION
ATTICA, INDIANA

SVE AND AIR SPARGE TREATMENT SYSTEM

ENGINEERING FLOW SHEET LEGEND

SCALE VERIFICATION
THIS BAR MEASURES 1" ON ORIGINAL. ADJUST SCALE ACCORDINGLY.

Approved

No	Revision	Date	Initial

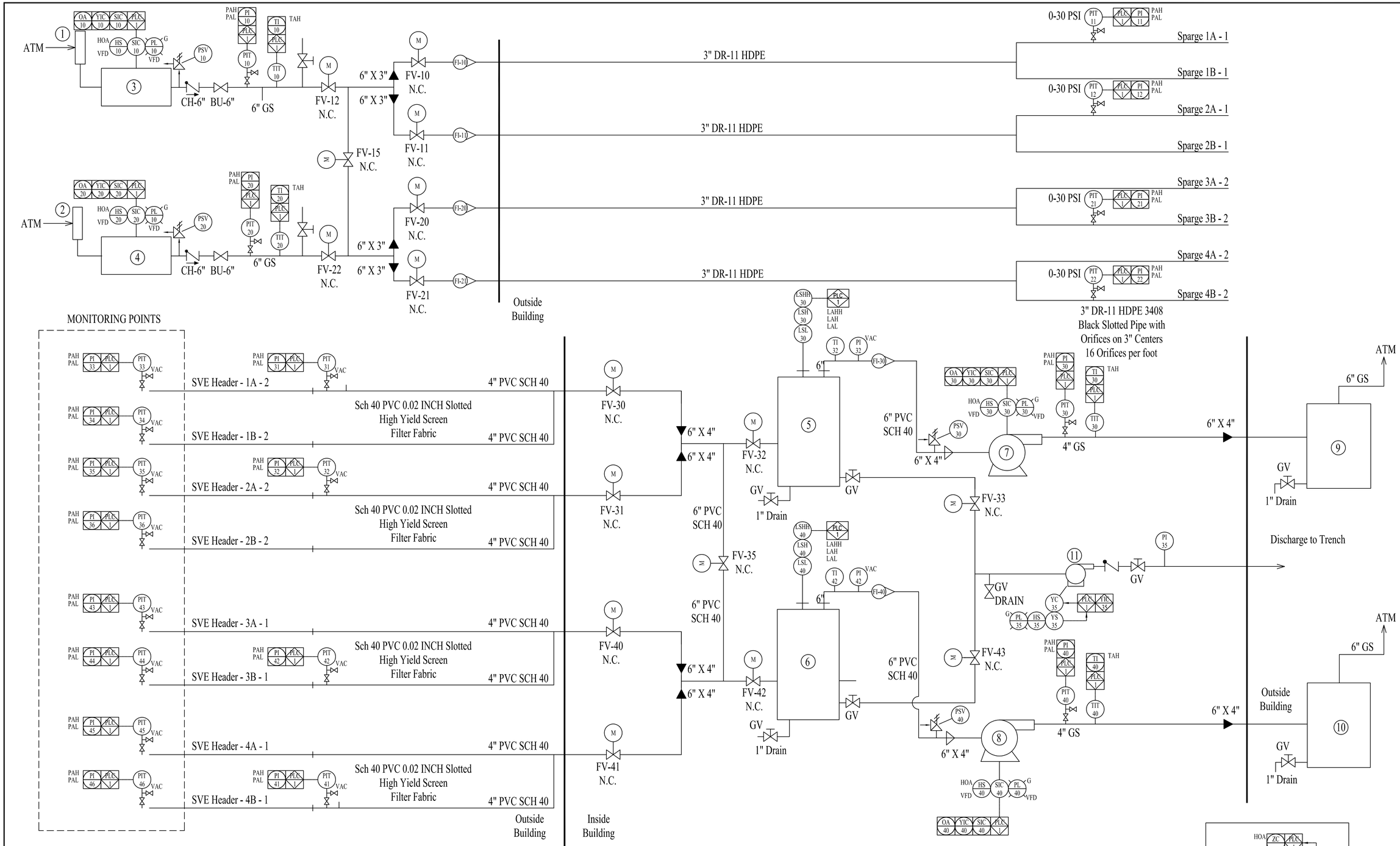

①	②	③	④	⑤	⑥	⑦	⑧	⑨	⑩	⑪	⑫	⑬
Silencer Inlet	Silencer Inlet	Sparge Blower #1	Sparge Blower #2	Knock-Out Pot No.1	Knock-Out Pot No.2	SVE Blower No.1	SVE Blower No.2	Silencer Exhaust	Silencer Exhaust	Transfer Pump #1		
U5-12	U5-12	HSI HT - 50	HSI HT - 50	MK 300	MK 300	HSI 5204	HSI 5204	U5-12	U5-12	1.5 HP CT		
500 cfm	500 cfm	50 HP	50 HP	300 Gallons	300 Gallons	HT - 15	HT - 15	800 cfm	800 cfm	15GPM @ 20PSI		
-	-	480V / 3Ø	480V / 3Ø	Drain	Drain	15 HP	15 HP	-	-	1.5 HP		
-	-	400 CFM @ 15PSI	400 CFM @ 15PSI	6" Cleanout	6" Cleanout	480V / 3Ø	480V / 3Ø	-	-	480V 3Ø		
15 PSI	15 PSI			6" Inlet Outlet	6" Inlet Outlet	600 CFM @ 80"W.C.	600 CFM @ 80"W.C.	15 PSI	15 PSI			
				38" X 64"	38" X 64"							

CONESTOGA-ROVERS & ASSOCIATES

Source Reference: CRA SURVEY, JUNE 8-19, 2009. INDIANA WEST SPC, US SURVEY FEET.
Project Manager: G. VALTERS
Reviewed By: G. VALTERS
Designed By: G. VALTERS
Drawn By: R. LEE
Scale: NONE
Project No: 19190-02
Report No: 044
Date: MAY, 2010
Drawing No: EF - 02

RADIO MATERIALS CORPORATION
ATTICA, INDIANA

SVE AND AIR SPARGE TREATMENT SYSTEM

ENGINEERING
FLOW SHEET

SCALE VERIFICATION
THIS BAR MEASURES 1" ON ORIGINAL. ADJUST SCALE ACCORDINGLY.

Approved

No	Revision	Date	Initial

Sparge Layout & Flow

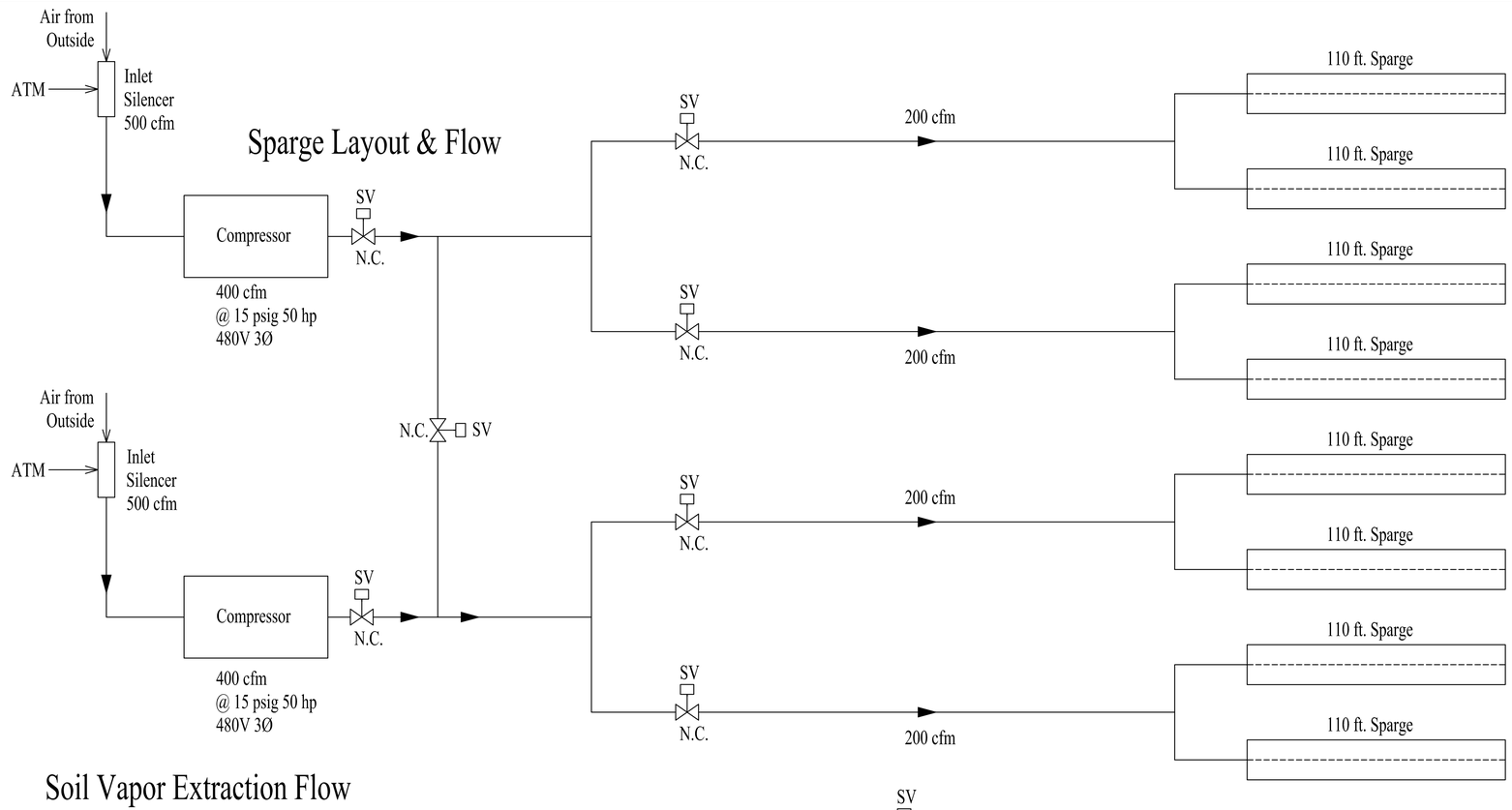

Soil Vapor Extraction Flow

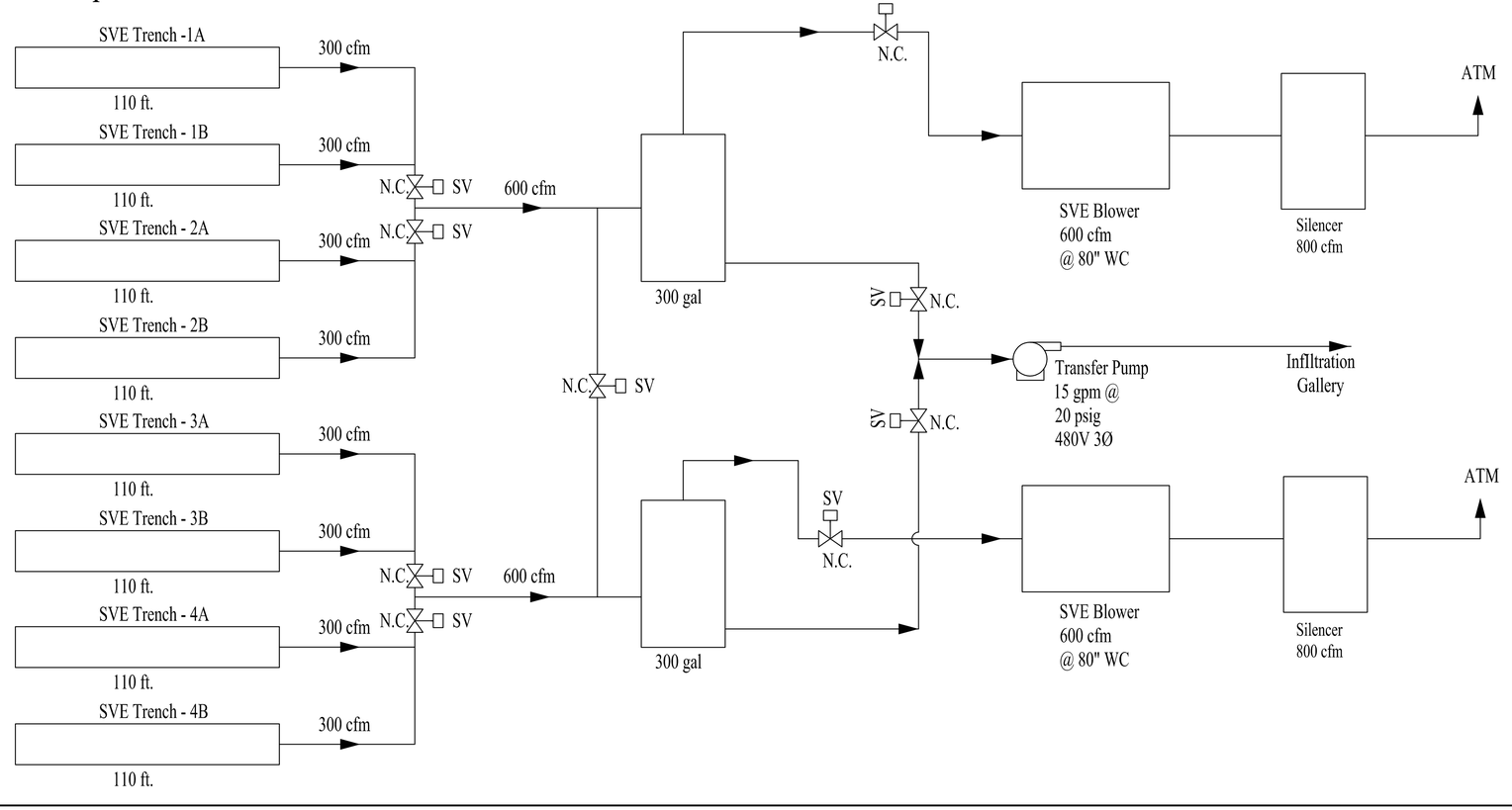

CONESTOGA-ROVERS & ASSOCIATES

RADIO MATERIALS CORPORATION
ATTICA, INDIANA

SVE AND AIR SPARGE TREATMENT SYSTEM

PROCESS FLOW
SHEET DIAGRAM

Source Reference: CRA SURVEY, JUNE 8-19, 2009. INDIANA WEST SPC, US SURVEY FEET.
Project Manager: G. VALTERS
Scale: NONE
Reviewed By: G. VALTERS
Project No: 19190-02
Designed By: G. VALTERS
Report No: 044
Drawn By: R. LEE
Date: MAY, 2010
Drawing No: PF - 01

SCALE VERIFICATION
THIS BAR MEASURES 1" ON ORIGINAL. ADJUST SCALE ACCORDINGLY.

Approved

No	Revision	Date	Initial

GENERAL NOTES

1. THE CONTRACTOR SHALL NOT SCALE THE DRAWINGS TO ESTABLISH DIMENSIONS. ALL DIMENSIONS SHALL BE CHECKED ON-SITE PRIOR TO ASSEMBLY OR CONSTRUCTION OF ANY WORK.
2. THE STRUCTURE HAS BEEN DESIGNED FOR THE IN-SERVICE LOADS. THE METHODS, PROCEDURES AND SEQUENCES OF CONSTRUCTION ARE THE SOLE RESPONSIBILITY OF THE CONTRACTOR. SUPPORTING FORMWORK FOR CONCRETE CONSTRUCTION SHALL NOT BE REMOVED BEFORE THE CONCRETE HAS GAINED SUFFICIENT STRENGTH TO SAFELY SUPPORT THE DEAD AND SUPERIMPOSED LOADS. THE CONTRACTOR SHALL TAKE ALL NECESSARY PRECAUTIONS TO AVOID OVERLOADS, AND MAINTAIN AND INSURE THE INTEGRITY OF THE STRUCTURE AT ALL STAGES OF CONSTRUCTION.
3. THE CONTRACTOR SHALL REFER TO MECHANICAL & ELECTRICAL DRAWINGS AND SPECIFICATIONS FOR SIZE AND LOCATION OF SLEEVES, ANCHORS, INSERTS AND OPENINGS REQUIRED. PRINCIPAL OPENINGS IN THE STRUCTURE ARE SHOWN ON THE DRAWINGS. SLEEVES AND OPENINGS NOT SHOWN ON STRUCTURAL DRAWINGS SHALL BE SUBJECT TO APPROVAL OF THE ENGINEER.
4. MATERIALS SPECIFIED ON THE DRAWINGS AND/OR IN THE SPECIFICATIONS SHALL BE USED UNLESS THE CONTRACTOR OBTAINS WRITTEN APPROVAL OF THE ENGINEER TO USE ALTERNATIVE MATERIALS. WHEN REQUESTING SUCH APPROVAL, THE CONTRACTOR SHALL PROVIDE ADEQUATE AND DETAILED MANUFACTURER'S LITERATURE AND TECHNICAL DATA FOR EACH MATERIAL PRIOR TO ITS POTENTIAL USE.
5. NO EXCAVATION WORK MAY BEGIN UNTIL ALL UNDERGROUND UTILITIES HAVE BEEN LOCATED AND MARK OUTS HAVE BEEN APPROVED BY THE OWNER. UTILITIES MAY EXIST THAT ARE NOT SHOWN ON THE DRAWINGS.
6. CONTRACTOR SHALL PROVIDE CONSTRUCTION FENCING AROUND ALL EXCAVATION AREAS.
7. CONTRACTOR SHALL PROVIDE EROSION CONTROL AROUND ALL EXCAVATION AREAS AND BUILDING FOUNDATION.

CONCRETE NOTES

1. CONCRETE CONSTRUCTION SHALL CONFORM TO ACI 301, 305, 306, 308, 315, 318 AND 350R SPECIFICATIONS.
2. LATEST REVISION AND/OR VERSION OF ALL CODES AND REFERENCE STANDARDS SHALL BE FOLLOWED.
3. CONCRETE SHALL DEVELOP A MINIMUM COMPRESSIVE STRENGTH OF 4,000 PSI AT 28 DAYS. SLUMP SHALL BE 3 1/2 INCHES ± 1 INCH.
4. CONCRETE SHALL BE AIR ENTRAINED. CEMENT SHALL BE PORTLAND CEMENT CONFORMING TO ASTM C150, TYPE II WITH AIR-ENTRAINING ADMIXTURE CONFORMING TO ASTM C260. AIR CONTENT (% BY VOLUME) SHALL NOT BE LESS THAN 4% NOR GREATER THAN 6.5% AND SHALL DEPEND ON MAXIMUM SIZE AGGREGATE USED.
5. NO ADMIXTURE SHALL CONTAIN CALCIUM CHLORIDE BASED COMPOUNDS. FLYASH AND POZZOLAN CONTENT SHALL NOT EXCEED 20% BY WEIGHT OF CEMENT.
6. REINFORCING BARS SHALL CONFORM TO ASTM A615 GRADE 60 SPECIFICATIONS.
7. LAP SPLICES IN REINFORCING BARS SHALL BE IN ACCORDANCE WITH THE TABLE BELOW.
8. CONCRETE PROTECTION FOR REINFORCING BARS (UNLESS OTHERWISE NOTED):
   A. FOOTINGS - 3 INCH BOTTOM AND SIDES, 2 INCH TOP
   B. GRADE BEAMS - 2 INCH BOTTOM AND SIDES, 1 1/2 INCH TOP (TO STIRRUPS)
   C. PIERS - 1 1/2 INCH (TO TIES)
   D. FORMED SLABS - 1 1/2 INCH TOP AND BOTTOM
   E. WALLS AND PADS - 2 INCH
   F. EXTERIOR SLABS ON FILL - 2 1/2 INCH BOTTOM, 2 INCH TOP
   G. INTERIOR SLABS ON FILL - 2 1/2 INCH BOTTOM, 1 1/2 INCH TOP
   H. SURFACES IN CONCTACT WITH OR OVER LIQUID - 2 INCH
9. NO CONSTRUCTION JOINT SHALL BE MADE UNLESS SHOWN ON DRAWINGS OR APPROVED IN WRITING BY THE ENGINEER.
10. ANCHOR BOLTS SHALL BE CARBON STEEL CONFORMING TO ASTM F1554 SPECIFICATIONS, WITH HEAVY HEX NUTS AND WASHERS. BOLTS, NUTS AND WASHERS SHALL BE GALVANIZED CONFORMING TO ASTM A123 AND A153 SPECIFICATIONS, AND SHALL BE ACCURATELY PLACED USING TEMPLATES.
11. GROUT IN DRILLED HOLES FOR ANCHOR BOLTS AND REINFORCING STEEL DOWELS, AND UNDER BASE PLATES SHALL BE NON-SHRINK NON-METALLIC "MASTERFLOW 713" OR "MASTERFLOW 928" BY DEGUSSA BUILDING SYSTEMS. MANUFACTURER'S INSTRUCTIONS CONCERNING HOLE SIZE, SURFACE PREPARATION AND INSTALLATION SHALL BE FOLLOWED.
12. EDGE TOOL TOP HORIZONTAL EDGES OF PIERS AND EQUIPMENT (PUMP) PADS. OTHER EXPOSED EDGES SHALL HAVE 3/4 INCH CHAMFER.
13. RAMPS, PADS AND SLABS SHALL BE TROWEL FINISHED TO WITHIN 1/8 INCH OF ELEVATIONS SHOWN ON DRAWINGS. FOLLOWING TROWELLING, PROVIDE NON-SLIP MEDIUM BROOM FINISH.
14. PROVIDE CORNER REINFORCING BARS TO MATCH HORIZONTAL BARS AT CORNERS AND INTERSECTIONS FOR CONTINUITY.
15. WELDED WIRE FABRIC SHALL CONFORM TO ASTM A82 AND A185 SPECIFICATIONS.
16. PROVIDE MINIMUM OF 6 INCH MECHANICALLY COMPACTED CRUSHED STONE UNDER SLABS, FOUNDATIONS AND WHERE OTHERWISE NOTED ON DRAWINGS.
17. JOINT SEALANT SHALL BE ONE-COMPONENT POLYURETHANE "SIKAFLEX-1A" BY SIKA CHEMICAL CORPORATION.
18. PRIOR TO CASTING CONCRETE PADS AND PIERS, BASE SLAB AND WALL SHALL BE CLEANED AND COATED WITH A CONCRETE BONDING AGENT. BONDING AGENT SHALL BE "CONCRESIVE LIQUID (LPL)" OR "CONCRESIVE PASTE (LPL)" BY DEGUSSA BUILDING SYSTEMS OR ESCOWELD EPOXY ADHESIVE. MANUFACTURER'S INSTRUCTIONS CONCERNING SURFACE PREPARATION AND APPLICATION SHALL BE FOLLOWED.

LAP SPLICE LENGTHS (IN)

BAR SIZE	TOP BARS		OTHERS	
	A	B	A	B
#3 (10)	19	24	15	19
#4 (13)	25	32	19	25
#5 (16)	31	40	24	31
#6 (19)	37	48	29	37
#7 (22)	54	70	42	54
#8 (25)	62	80	48	62
#9 (29)	70	91	54	70
#10 (32)	79	102	61	79
#11 (36)	87	113	67	87

1. BAR SIZES IN PARENTHESIS (13) ARE CORRESPONDING METRIC SIZES.
2. LAP SPLICES SHALL BE CLASS B SPLICES EXCEPT THAT CLASS A SPLICES ARE ALLOWED WHEN ONE-HALF OR LESS OF TOTAL REINFORCEMENT IS SPLICED WITHIN A LAP LENGTH.
3. TOP BARS ARE HORIZONTAL BARS WITH MORE THAN 12" OF CONCRETE BELOW BARS.

STRUCTURAL STEEL NOTES

1. FABRICATION, ERECTION AND WORKMANSHIP SHALL CONFORM TO THE DESIGN DRAWINGS, SCOPE OF WORK AND SPECIFICATIONS, AND SHALL BE IN ACCORDANCE WITH THE AISC SPECIFICATIONS.
2. LATEST REVISION AND/OR VERSION OF ALL CODES AND REFERENCE STANDARDS SHALL BE FOLLOWED.
3. ALL DIMENSIONS SHALL BE FIELD CHECKED BEFORE FABRICATION MAY BEGIN.
4. WELDING SHALL BE IN ACCORDANCE WITH THE AWS STRUCTURAL WELDING CODE. WELDED CONNECTIONS SHALL BE MADE WITH E70XX ELECTRODES. ROOT PASS AND TACK WELDS SHALL BE MADE WITH E6010 ELECTRODES. FILLET WELDS ON STANDARD FRAMED BEAM CONNECTIONS MAY BE 3/16 INCH MINIMUM. ALL OTHER FILLET WELDS SHALL BE 1/4 INCH MINIMUM.
5. GUSSET PLATES AND CLIP ANGLES SHALL BE 5/16 INCH THICK MINIMUM (UNLESS OTHER- WISE NOTED). GENERALLY, ONE-SIDED CONNECTIONS FOR BEAMS SHALL NOT BE USED.
6. SHOP CONNECTIONS MAY BE EITHER WELDED OR BOLTED. FIELD CONNECTIONS SHALL BE BOLTED (UNLESS OTHERWISE NOTED). CONNECTIONS FOR NEW STEEL FRAMING TO EXISTING STEEL SHALL HAVE ONE END OF MEMBER BOLTED TO ALLOW FOR ADJUSTMENTS. WELDED CONNECTIONS, FIELD AND SHOP, SHALL BE CONTINUOUS FULL PENETRATION SEAL WELDS.
7. FASTENERS SHALL BE HIGH STRENGTH ASTM A325-N, 3/4 INCH DIAMETER GALVANIZED BOLTS WITH ASTM A194 GRADE 2H OR A563 GRADE DH NUTS TAPPED OVERSIZE AFTER GALVANIZING AND THREADS LUBRICATED. HARDENED WASHERS SHALL BE PROVIDED UNDER ROTATING PART OF NUT AND BOLT ASSEMBLY. CONNECTIONS NOTED WITH A325-SC BOLTS SHALL BE SLIP CRITICAL PER AISC SPECIFICATIONS.
8. FASTENERS FOR HANDRAIL, LADDER AND STAIR CONNECTIONS SHALL BE 3/4 INCH DIAMETER GALVANIZED BOLTS CONFORMING TO ASTM A307 SPECIFICATIONS.
9. BOLT HOLES SHALL NOT BE LARGER THAN 1/16 INCH PLUS DIAMETER OF THE BOLT. A MINIMUM OF TWO BOLTS PER CONNECTION SHALL BE REQUIRED, UNLESS NOTED OTHERWISE.
10. WHERE BRACING FORCES ARE NOT GIVEN, DESIGN CONNECTIONS AT EACH END FOR 50% OF MEMBER CAPACITY IN TENSION.
11. ALL STEEL SHALL BE PAINTED WITH ONE COAT PRIMER (6 MILS DFT) EPOXY BAR-RUST 235 AND ONE COAT FINISH (2 MILS DFT) ALIPHATIC URETHANE DEVTHANE 379 BY ICI DULUX-DEVOE COATINGS OR AN APPROVED EQUAL. SURFACE PREPARATION SHALL COMPLY WITH MANUFACTURES REQUIREMENTS. FINISH COAT COLOR TO BE CHOSEN BY ENGINEER AND OWNER.
12. STRUCTURAL STEEL SHALL CONFORM TO FOLLOWING SPECIFICATIONS:
   A. W , WT AND HP SHAPES - ASTM A992, 50 KSI MINIMUM YIELD STRESS, 65 KSI TENSILE STRESS
   B. CHANNELS - ASTM A36, 36 KSI MINIMUM YIELD STRESS, 58 KSI TENSILE STRESS
   C. ANGLES - ASTM A36, 36 KSI MINIMUM YIELD STRESS, 58 KSI TENSILE STRESS
   D. PIPE - ASTM A53 GRADE B, 35 KSI MINIMUM YIELD STRESS, 60 KSI TENSILE STRESS
   E. PLATES - ASTM A36, 36 KSI MINIMUM YIELD STRESS, 58 KSI TENSILE STRESS

FOUNDATION NOTES

1. FOUNDATION DESIGN IS BASED UPON USING A BEARING CAPACITY OF 2,000 POUNDS PER SQUARE FOOT PER GEOTECHNICAL RECOMMENDATIONS BY INSPECSOL ENGINEERING INC, PROJECT No. 019190-02, DATED 12/14/2009. CONTRACTOR SHALL VERIFY THE ALLOWABLE BEARING CAPACITY PRIOR TO STARTING CONSTRUCTION.
2. EXISTING UNDERGROUND PIPING, REINFORCED CONCRETE STRUCTURES, UTILITIES, ELECTRICAL CABLES AND GROUNDING SYSTEMS NOT IDENTIFIED ON THE DRAWINGS MAY EXIST. WHEN UNCOVERED, THE CONTRACTOR MUST REPORT FINDINGS TO THE ENGINEER FOR IDENTIFICATION AND RECOMMENDED ACTION.
3. CONTRACTOR SHALL BACKFILL AROUND ALL FOUNDATIONS WITH SELECT BACKFILL COMPACTED TO 95% OF THE MAXIMUM DENSITY IN ACCORDANCE WITH ASTM-D 1557. SELECT BACKFILL SHALL COMPLY WITH SPECIFICATIONS.

ARCHITECTURAL NOTES - PRE-ENGINEERED BUILDING

1. PRE-ENGINEERED BUILDING SHALL BE DESIGNED TO WITHSTAND THE MOST SEVERE LOAD COMBINATIONS IN ACCORDANCE WITH THE APPLICABLE BUILDING CODE.
2. MANUFACTURER SHALL PROVIDE SUPPORT FOR WALL MOUNTED EQUIPMENT WHERE INDICATED. REFER TO MECHANICAL DRAWINGS FOR EQUIPMENT INFORMATION AND LOCATIONS.
3. BUILDING SHALL CONSIST OF PRE-ENGINEERED METAL, CLEAR SINGLE SPAN RIGID FRAME WITH STRAIGHT COLUMNS (NON-TAPERED) AND GABLED ROOF BEAMS.
4. ROOF SHALL HAVE A 1:12 PITCH.
5. ROOF PANELS SHALL BE 24(MINIMUM) GAUGE STANDING SEAM STEEL.
6. EXTERIOR WALL PANELS SHALL BE 26 GAUGE STEEL.(MIN.)
7. INTERIOR WALL LINER PANELS SHALL BE 28 GAUGE STEEL.(MIN.)
8. BUILDING SHALL HAVE A 6" HIGH AND 8" WIDE CONCRETE CURB. GROUT UNDER BUILDING COLUMN STEEL BASE PLATES SHALL BE 1" THICK.
9. OPENINGS, CUTOUTS AND HOLES IN WALL AND ROOF PANELS SHALL BE COMPLETELY SEALED BY MECHANICAL/ELECTRICAL CONTRACTORS WITH FIRE STOP AND WEATHER PROOF MATERIALS AFTER PIPE/DUCT/CABLE INSTALLATIONS.
10. OPENINGS IN STEEL SIDING TO BE PROVIDED WITH REMOVABLE PANELS.
11. PAINT SHALL CONSIST OF ONE COAT PRIMER (1 MIL DFT) ULTRA-HIDE PVA (1030) AND ONE COAT FINISH (2 MILS DFT) ULTRA-HIDE LATEX ENAMEL (1416) BY ICI DULUX-PAINT STORES.
12. ROOF SHALL BE INSULATED WITH R-20 CONTINUOUS INSULATION ABOVE DECK.
13. WALLS SHALL BE INSULATED WITH R-13 CONTINUOUS RIGID INSULATION.

BUILDING CODE DATA

CODE:	INTERNATIONAL BUILDING CODE, 2006
LOCATION:	ATTICA, INDIANA
BUILDING DIMENSIONS:	APPROX. 24'-0" x 20'-0"
BUILDING HEIGHT:	12'-0" INTERIOR CLEARANCE
BUILDING AREA:	APPROX. 480 SQUARE FEET (TABLE 503)
OCCUPANCY CLASS:	USE GROUP F-2 FACTORY INDUSTRIAL (SECTION 306.3)
CONSTRUCTION:	NON-COMBUSTIBLE TYPE 2B (SECTION 602.2, TABLE 601)
OCCUPANT LOAD:	ACTUAL - NONE, TABLE - 11 PERSONS (SECTION 1004.1.2)
BUILDING TYPE:	PRE-ENGINEERED METAL, STRUCTURAL STEEL RIGID FRAMED
BUILDING INSULATION:	WALLS - R13, ROOF - R20
FIRE SEPARATION DISTANCE:	> 30 FEET
FIRE RESISTANCE RATING:	EXTERIOR WALL - 0 HR (TABLES 601 & 602)
FIRE SEPARATION ASSEMBLIES:	NOT REQUIRED (TABLE 302.3.2)

STRUCTURAL LOADS (NON-FACTORED)

1. DEAD LOAD	25 POUNDS PER SQUARE FOOT + BUILDING LOAD
2. FLOOR LIVE LOAD	
UNIFORMLY DISTRIBUTED LOAD	125 POUNDS PER SQUARE FOOT
CONCENTRATED LOAD	2,000 POUNDS (ON 2 1/2 FT x 2 1/2 FT SQUARE AREA)
3. ROOF LIVE LOAD	20 POUNDS PER SQUARE FOOT
CONCENTRATED LOAD	200 POUNDS (ON AREA OF ONE SQUARE FOOT)
4. ROOF SNOW LOAD	
GROUND SNOW LOAD	20 POUNDS PER SQUARE FOOT (FIGURE 1608.2)
SNOW EXPOSURE FACTOR	1.0 (TABLE 1608.3.1)
SNOW LOAD IMPORTANCE FACTOR	1.0 (SECTION 1604.5)
5. WIND LOAD	
BASIC WIND SPEED (3-SECOND GUST)	90 MILES PER HOUR (FIGURE 1609)
EXPOSURE CATEGORY	C (SECTION 1609.4)
WIND LOAD IMPORTANCE FACTOR	1.0 (SECTION 1604.5)
6. EARTHQUAKE LOAD	
SEISMIC USE GROUP	GROUP I (SECTION 1613.1)
SEISMIC IMPORTANCE FACTOR	1.0 (SECTION 1604.5)
SITE CLASS (SOIL PROFILE)	D (SECTION 1613.5.2)
MAPPED SPECTRAL RESPONSE ACCELERATIONS	
S_S (SHORT PERIOD)	0.305 (FIGURE 1613.5 (1))
S_1 (1-SECOND PERIOD)	0.221 (FIGURE 1613.5 (2))
DESIGN SPECTRAL RESPONSE COEFFICIENTS	
S_{DS} (SHORT PERIOD)	0.203 (SECTION 1613.5.4)
S_{D1} (1-SECOND PERIOD)	0.147 (SECTION 1613.5.4)
SEISMIC DESIGN CATEGORY	C (TABLES 1613.5.6 (1) & 1613.5.6 (2))
ANALYSIS PROCEDURE	EQUIVALENT LATERAL FORCE (SECTION 1613)
BASIC SEISMIC FORCE RESISTING SYSTEM	ORDINARY STEEL MOMENT FRAME
7. DEFLECTION LIMITATION	
EXTERIOR WALL AND ROOF SYSTEMS	NOT TO EXCEED 1/240 OF SPAN OF STRUCTURAL MEMBER
8. FOUNDATION	
NET ALLOWABLE SOIL BEARING PRESSURE	2,000 POUNDS PER SQUARE FOOT

CONESTOGA-ROVERS & ASSOCIATES

Source Reference: CRA SURVEY, JUNE 8-19, 2009, US SURVEY FEET.
Date: MAY, 2010
Project Manager: G. VALTERS
Reviewed By: J. THORNTON
Designed By: L. LEMUNYAN
Drawn By: M. GALLEY
Scale: NONE
Project No: 19190-02
Report No: 044
Drawing No: ST - 01

RADIO MATERIALS CORPORATION
ATTICA, INDIANA

SVE AND AIR SPARGE TREATMENT SYSTEM

TREATMENT BUILDING
GENERAL NOTES

SCALE VERIFICATION
THIS BAR MEASURES 1" ON ORIGINAL. ADJUST SCALE ACCORDINGLY.

Approved

No	Revision	Date	Initial

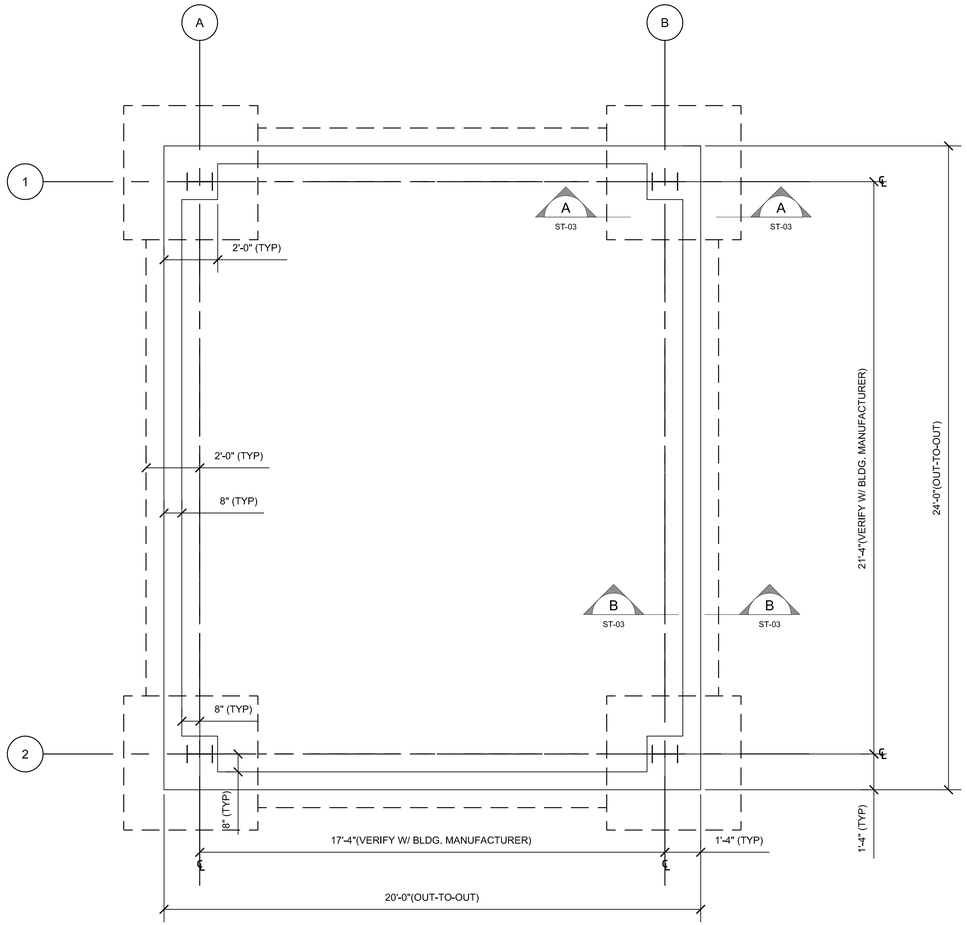

TREATMENT BUILDING
FOUNDATION PLAN

SCALE: 3/16"=1'-0"

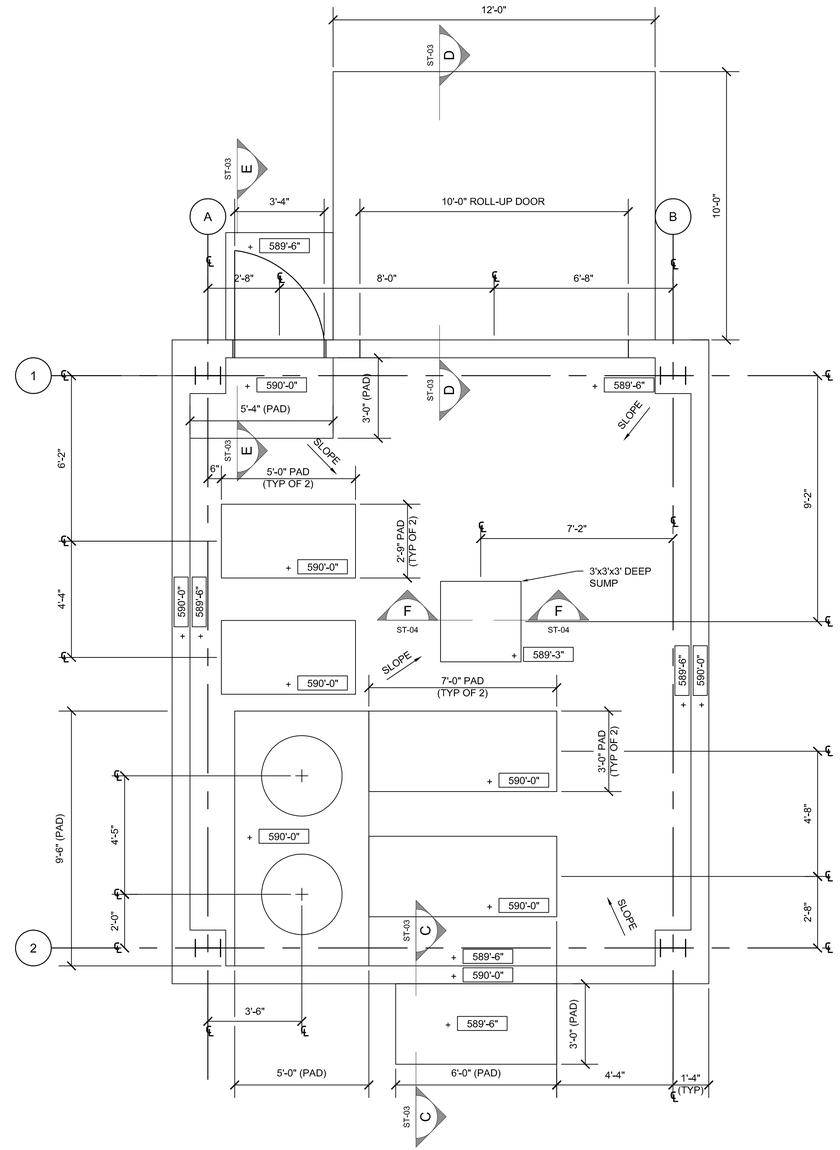

TREATMENT BUILDING
FLOOR PLAN

SCALE: 3/8"=1'-0"

CONESTOGA-ROVERS & ASSOCIATES

Source Reference:
CRA SURVEY, JUNE 8-10, 2009. INDIANA WEST SPC, US SURVEY FEET.

Project Manager: G. VALTERS	Reviewed By: J. THORNTON	Designed By: L. LEMUNYAN	Date: MAY, 2010
Scale: AS SHOWN	Project No: 19590-02	Report No: 044	Drawing No: ST-02

RADIO MATERIALS CORPORATION
ATTICA, INDIANA

SVE AND AIR SPARGE TREATMENT SYSTEM

TREATMENT BUILDING
FOUNDATION AND FLOOR PLAN

SCALE VERIFICATION
THIS BAR MEASURES 1" ON ORIGINAL. ADJUST SCALE ACCORDINGLY.

Approved

Revision	Date	Initial

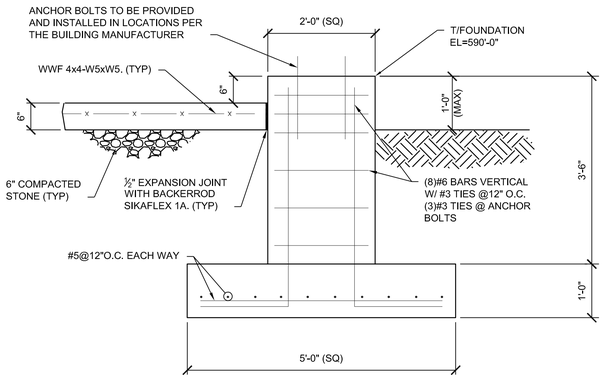

SECTION A
3/4"=1'-0"
ST-02

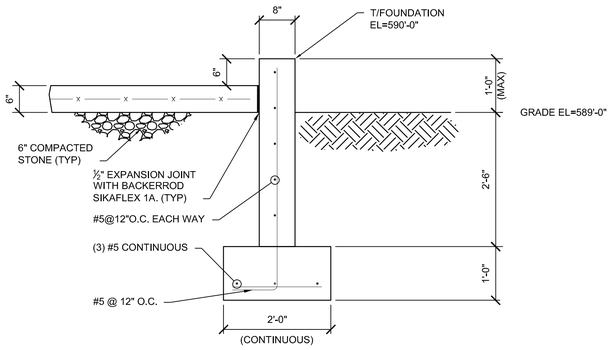

SECTION B
3/4"=1'-0"
ST-02

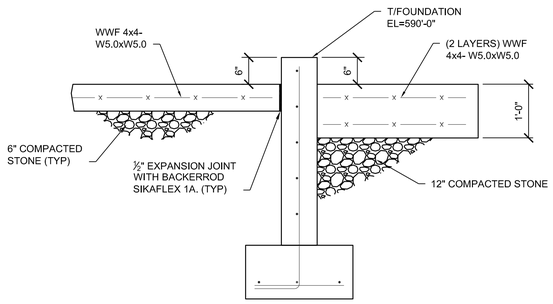

SECTION C
3/4"=1'-0"
ST-02

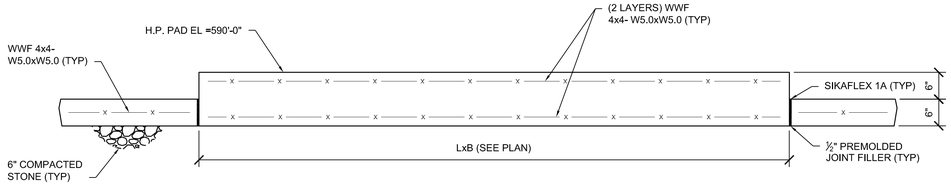

TYPICAL EQUIPMENT PAD
DETAIL
SCALE: ¾"=1'-0"

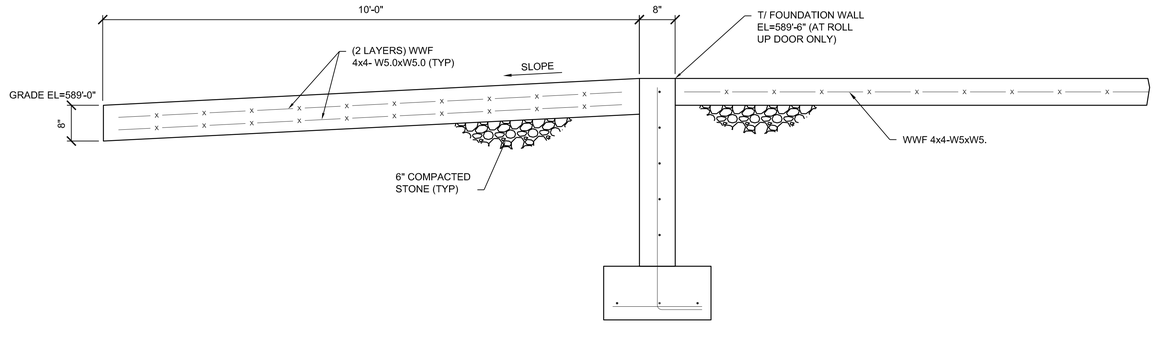

SECTION D
3/4"=1'-0"
ST-02

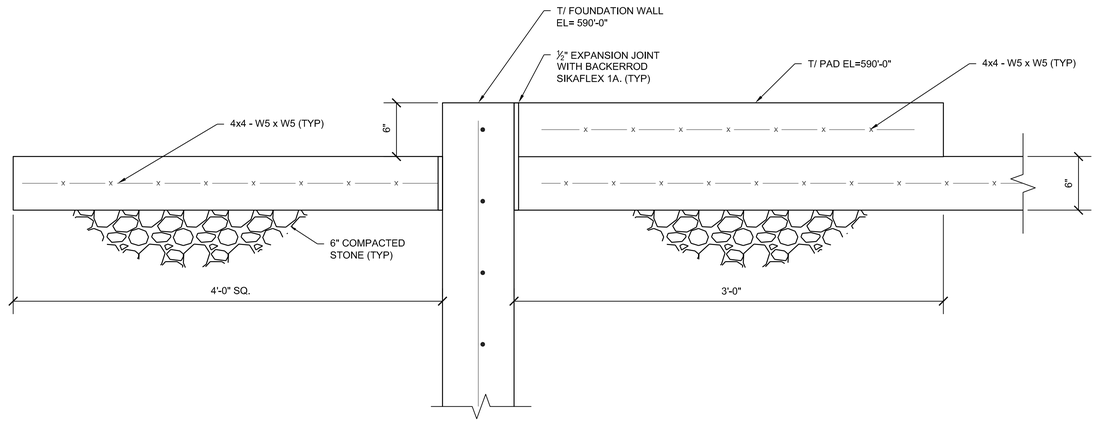

SECTION E
1-1/2"=1'-0"
ST-02

CONESTOGA-ROVERS & ASSOCIATES

Source Reference:
CRA SURVEY, JUNE 8-19, 2009. INDIANA WEST SPC, US SURVEY FEET.

Date: MAY, 2010
Drawn By: M. GALLEY
Designed By: L. LEMUNYAN
Reviewed By: J. THORNTON
Report No: 044
Project No: 19590-02
Project Manager: G. WALTERS
Scale: AS SHOWN
Drawing No: ST - 03

RADIO MATERIALS CORPORATION
ATTICA, INDIANA

SVE AND AIR SPARGE TREATMENT SYSTEM

TREATMENT BUILDING
SECTION DETAILS

SCALE VERIFICATION
THIS BAR MEASURES 1" ON ORIGINAL. ADJUST SCALE ACCORDINGLY.

Approved

No	Revision	Date	Initial

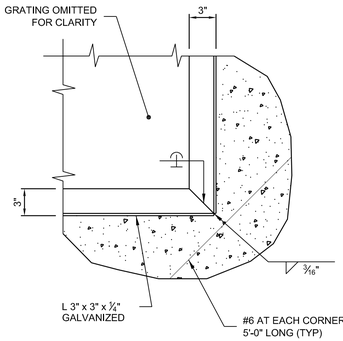

DETAIL A
1-1/2"=1'-0" ST-04

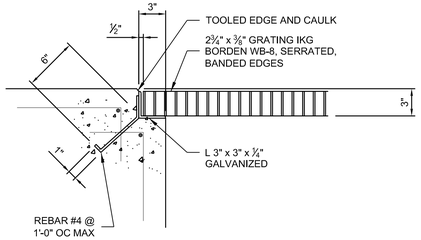

DETAIL B
1-1/2"=1'-0" ST-04

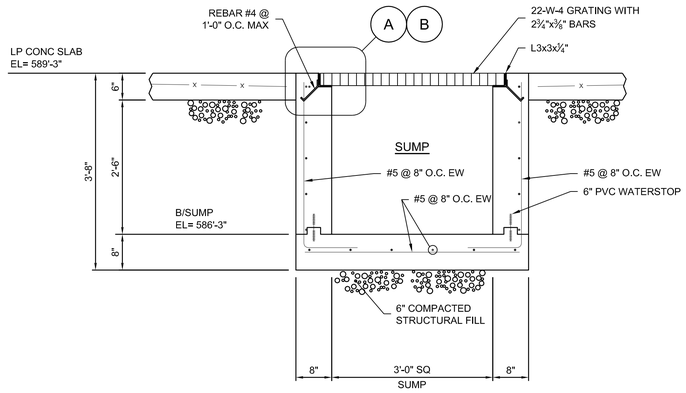

TYPICAL CAST-IN-PLACE SUMP

SCALE: ¾"=1'-0"

(OR APPROVED PRE-CAST SUMP AS AN ALTERNATIVE)

SECTION F
3/4"=1'-0" ST-01

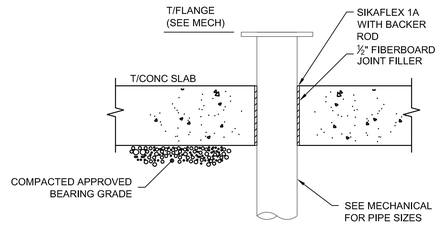

PIPE AT FLOOR SLAB (TYP)

SCALE: N.T.S.

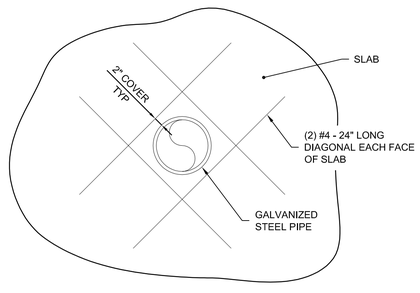

SLAB AND WALL REINFORCEMENT AROUND PIPE

SCALE: N.T.S.

CONESTOGA-ROVERS & ASSOCIATES

Source Reference:
CRA SURVEY, JUNE 8-19, 2009. INDIANA WEST SPC, US SURVEY FEET.

Date: MAY, 2010
Drawn By: M. GALLEY
Designed By: L. LEMUNYAN
Reviewed By: J. THORNTON
Report No: 044
Project Manager: G. WALTERS
Project No: 19590-02
Scale: AS SHOWN
Drawing No: ST - 04

RADIO MATERIALS CORPORATION
ATTICA, INDIANA

SVE AND AIR SPARGE TREATMENT SYSTEM

TREATMENT BUILDING
CONCRETE DETAILS

SCALE VERIFICATION
THIS BAR MEASURES 1" ON ORIGINAL. ADJUST SCALE ACCORDINGLY.

Approved

No	Revision	Date	Initial

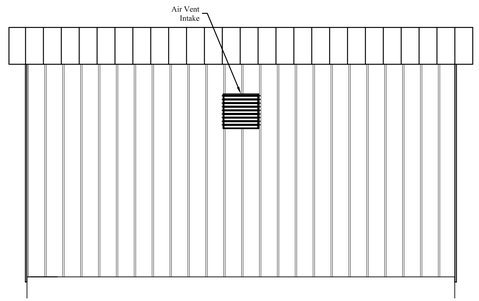

Proposed Equipment Building
North Wall Exterior Elevation

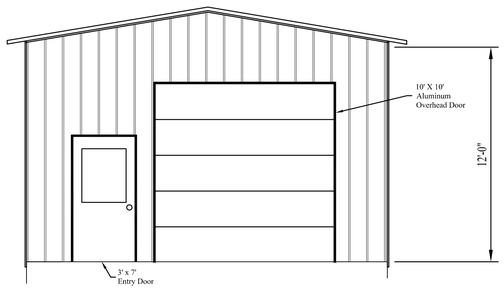

Proposed Equipment Building
West Wall Exterior Elevation

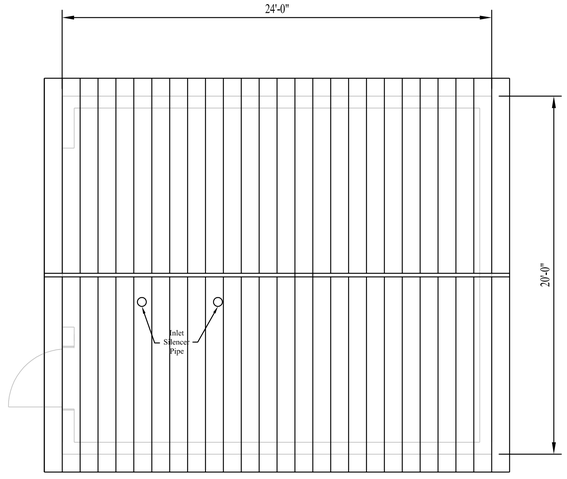

Proposed Equipment Building
Floor Plan

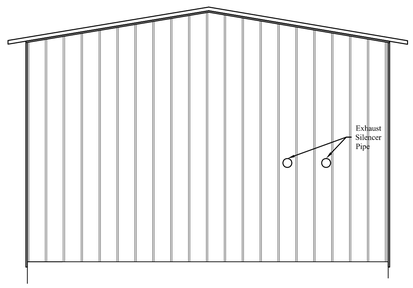

Proposed Equipment Building
East Wall Exterior Elevation

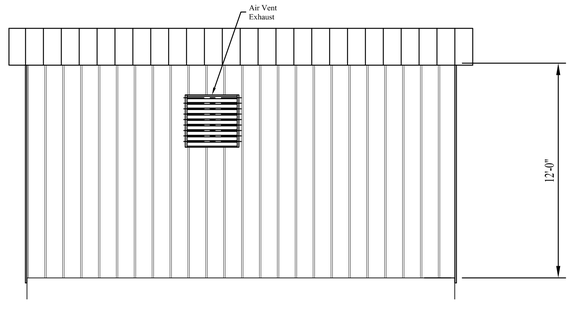

Proposed Equipment Building
South Wall Exterior Elevation

CONESTOGA-ROVERS & ASSOCIATES

RADIO MATERIALS CORPORATION
ATTICA, INDIANA

SVE AND AIR SPARGE TREATMENT SYSTEM

TREATMENT BUILDING ROOF PLAN
AND EXTERIOR WALL ELEVATIONS

Source Reference: CRA SURVEY, JUNE 8-19, 2009. INDIANA WEST SPC, US SURVEY FEET.	Date: MAY, 2010
Project Manager: G. VALTERS	Reviewed By: G. VALTERS
Designed By: G. VALTERS	Drawn By: R. LEE
Scale: 1/4" = 1'-0"	Project No: 19190-02
Report No: 044	Drawing No: ST - 05

SCALE VERIFICATION
THIS BAR MEASURES 1" ON ORIGINAL. ADJUST SCALE ACCORDINGLY.

Approved

No	Revision	Date	Initial

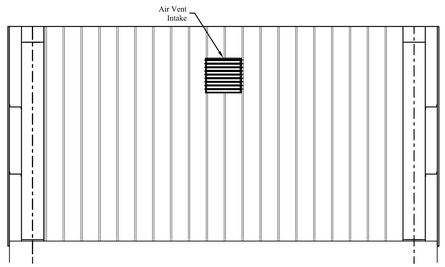

Proposed Equipment Building
North Wall Interior Elevation

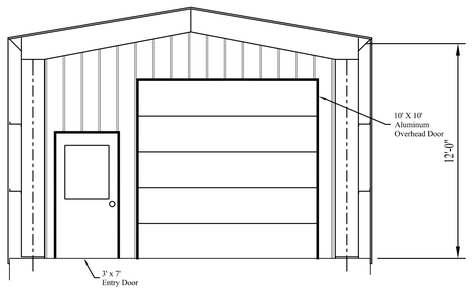

Proposed Equipment Building
West Wall Interior Elevation

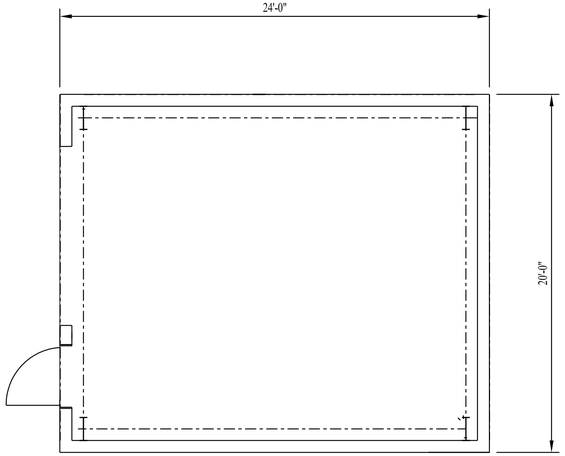

Proposed Equipment Building
Floor Plan

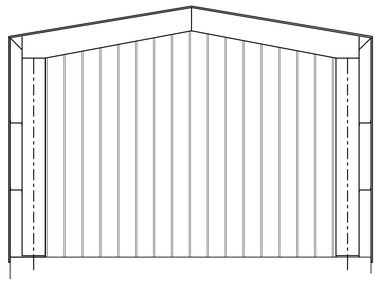

Proposed Equipment Building
East Wall Interior Elevation

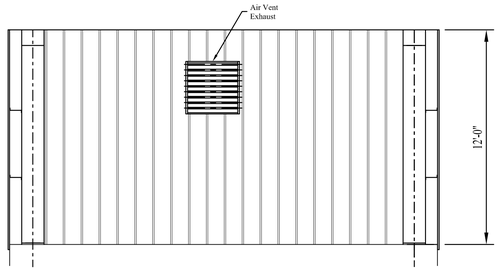

Proposed Equipment Building
South Wall Interior Elevation

CONESTOGA-ROVERS & ASSOCIATES

RADIO MATERIALS CORPORATION
ATTICA, INDIANA

SVE AND AIR SPARGE TREATMENT SYSTEM

TREATMENT BUILDING FLOOR PLAN
AND INTERIOR WALL ELEVATIONS

Source Reference: CRA SURVEY, JUNE 8-19, 2009. INDIANA WEST SPC, US SURVEY FEET.	Date: MAY, 2010
Project Manager: G. VALTERS	Reviewed By: G. VALTERS
Designed By: G. VALTERS	Drawn By: R. LEE
Scale: 1/4" = 1'-0"	Project No: 19190-02
Report No: 044	Drawing No: ST - 06

SCALE VERIFICATION
THIS BAR MEASURES 1" ON ORIGINAL. ADJUST SCALE ACCORDINGLY.

Approved

No	Revision	Date	Initial

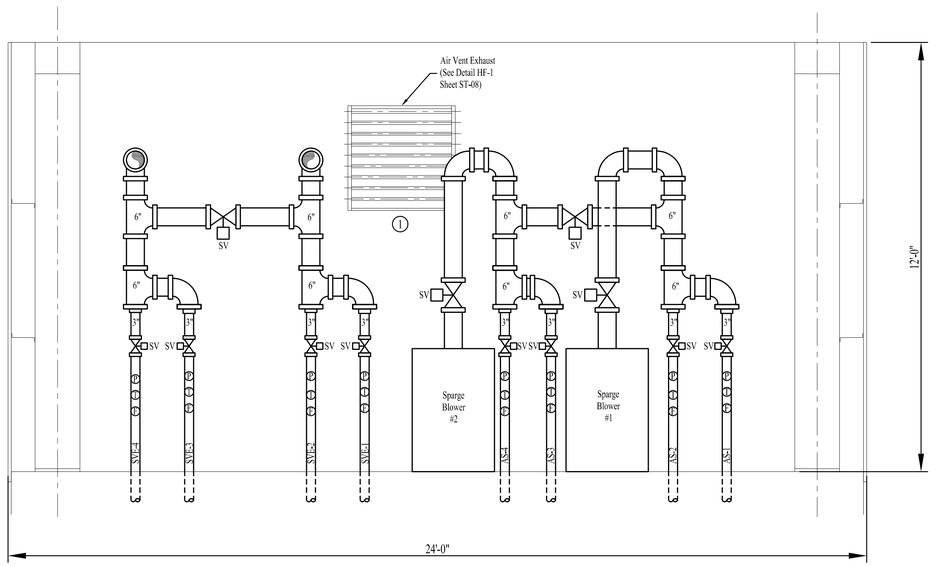

PROPOSED EQUIPMENT BUILDING - SOUTH WALL INTERIOR ELEVATION

SCALE: 1/2"=1'-0"

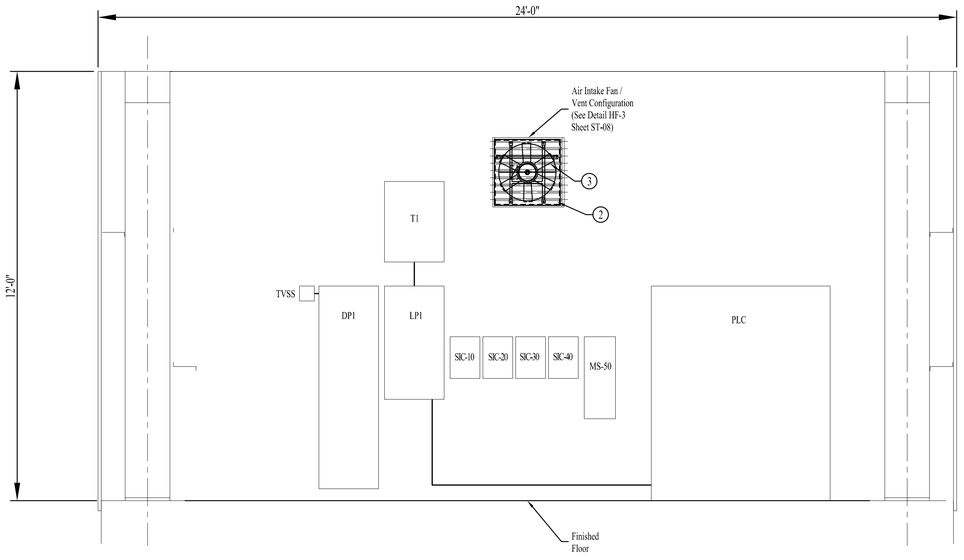

PROPOSED EQUIPMENT BUILDING - NORTH WALL INTERIOR ELEVATION

SCALE: 1/2"=1'-0"

Bill of Materials

Item	Description	Quantity
1	Hartzell Series FEP, Fiberglass End Pivoted Automatic Duct Mount 36" Diameter Shutter or Equivalent	1
2	Hartzell Series FEP, Fiberglass End Pivoted Automatic Flange Mount 24" Diameter Shutter or Equivalent	1
3	Hartzell Standard Panel (Direct Drive) Standard Air Flow Series 025 18" Dia. Model Code A 025-246-C-STFCK2 or Equivalent	1
4	Chromalax LUH Horizontal Unit Heaters Catalog Number LUH-D-10-43-30 10 10kW 480 VAC or Equivalent	2

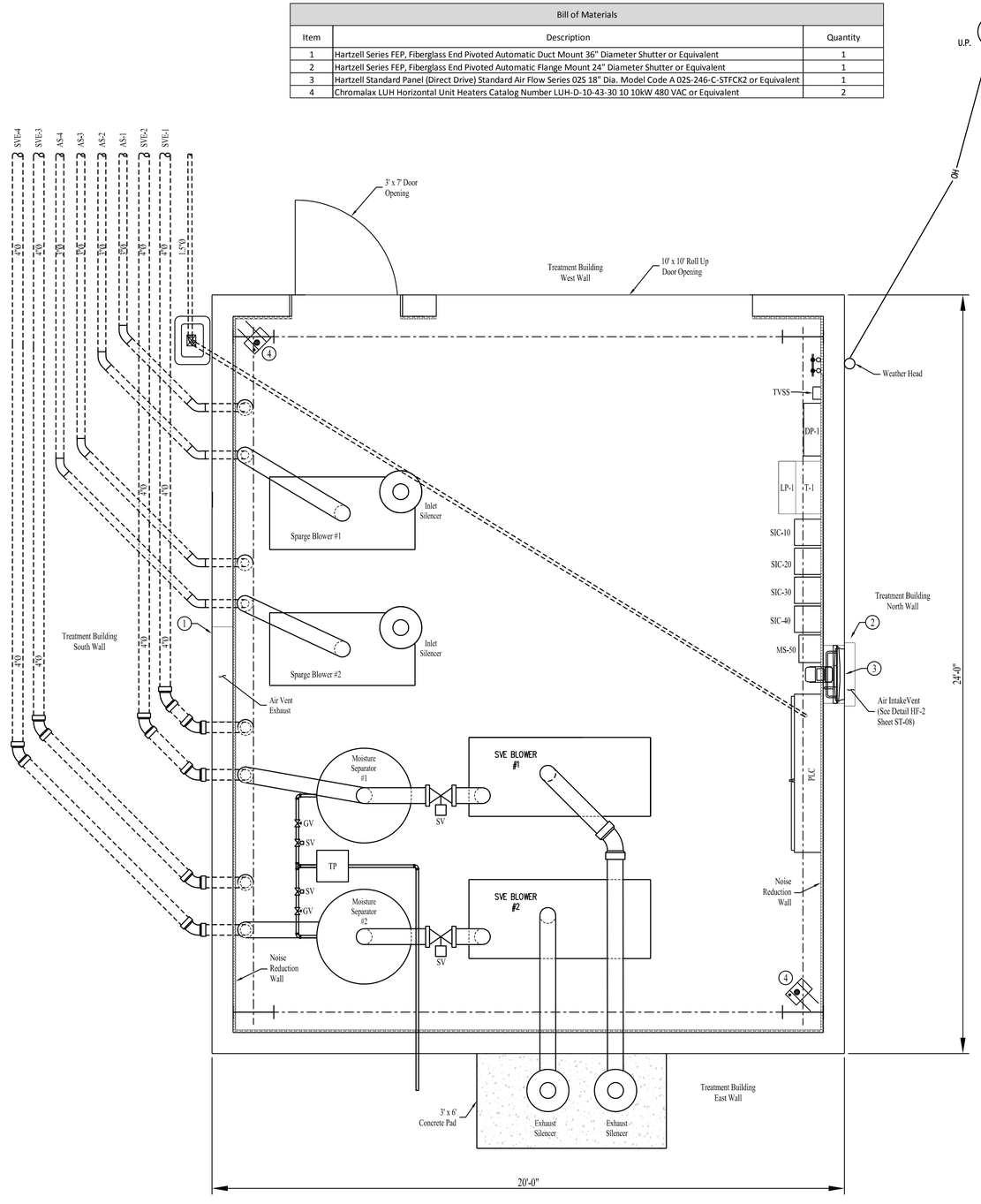

PROPOSED EQUIPMENT BUILDING - SYSTEM LAYOUT

SCALE: 1/2"=1'-0"

N

CONESTOGA-ROVERS & ASSOCIATES

Source Reference:
CRA SURVEY, JUNE 8-19, 2009, INDIANA WEST SPC, US SURVEY FEET.

Project Manager: G. VALTERS
Reviewed By: G. VALTERS
Designed By: G. VALTERS
Drawn By: R. LEE
Project No: 19190-02
Report No: 044
Scale: 1/2" = 1'-0"
Date: MAY, 2010
Drawing No: ST - 07

RADIO MATERIALS CORPORATION
ATTICA, INDIANA

SVE AND AIR SPARGE TREATMENT SYSTEM

TREATMENT BUILDING
SYSTEM LAYOUT

SCALE VERIFICATION
THIS BAR MEASURES 1" ON ORIGINAL. ADJUST SCALE ACCORDINGLY.

Approved

No	Revision	Date	Initial

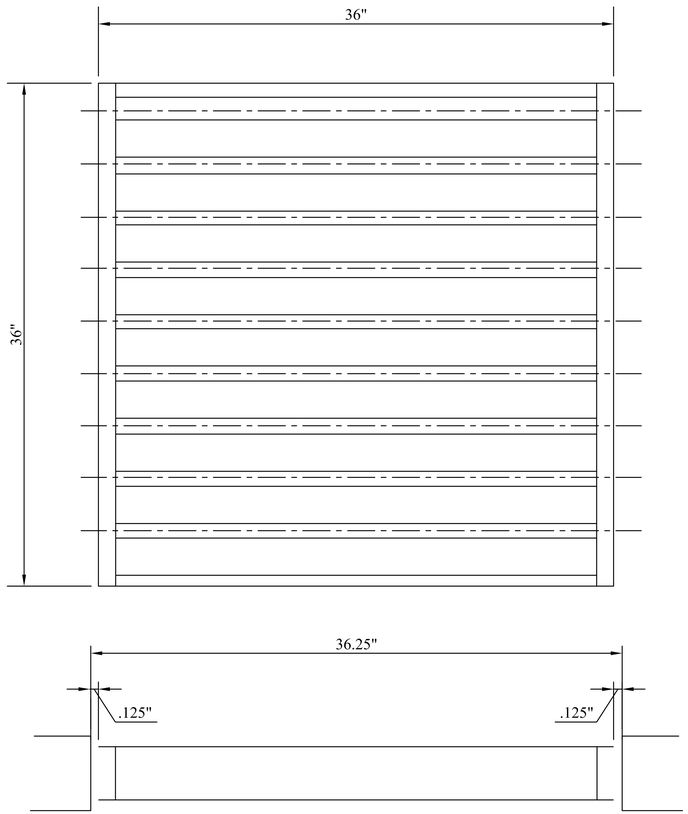

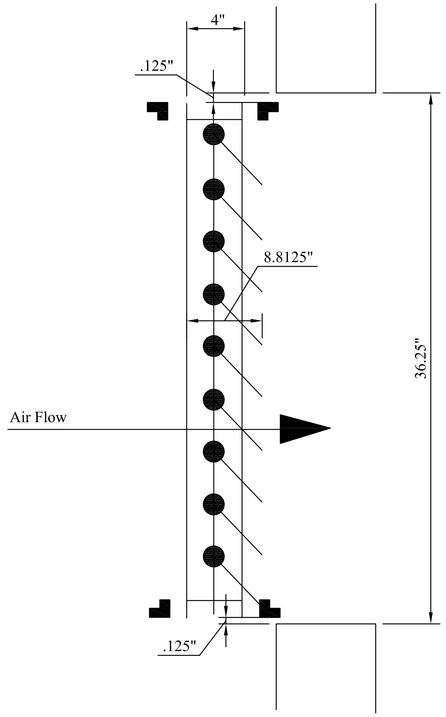

DETAIL HF-1
DUCT MOUNT - SERIES FEP FIBERGLASS
END PIVOTED AUTOMATIC SHUTTER

NOT TO SCALE

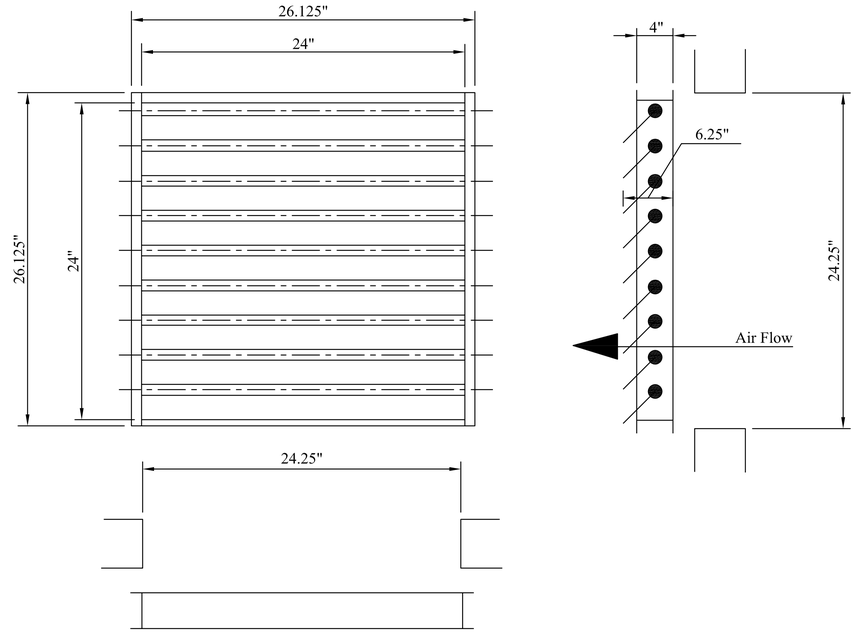

DETAIL HF-2
FLANGE MOUNT - SERIES FEP FIBERGLASS
END PIVOTED AUTOMATIC SHUTTER

NOT TO SCALE

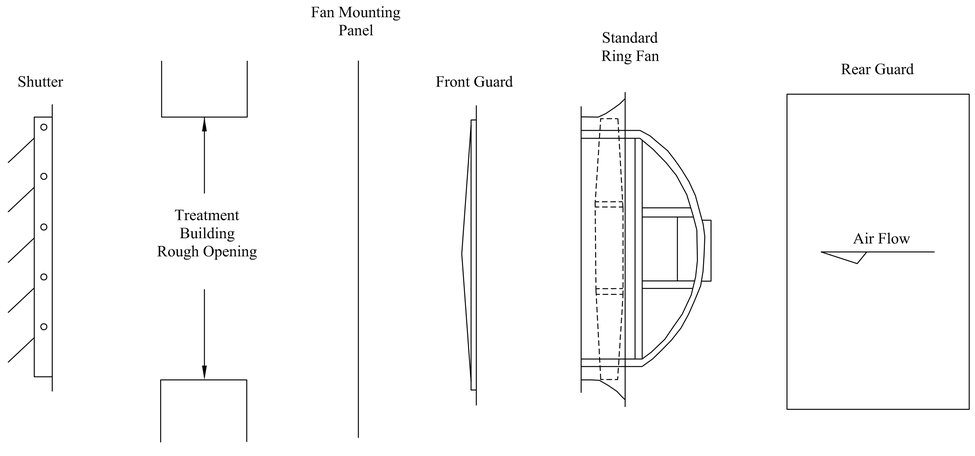

DETAIL HF-3
STANDARD PANEL FAN SERIES 02S
ACCESSORY MOUNTING CONFIGURATION 2-SF
DIRECT DRIVE RING FAN - STANDARD FLOW

NOT TO SCALE

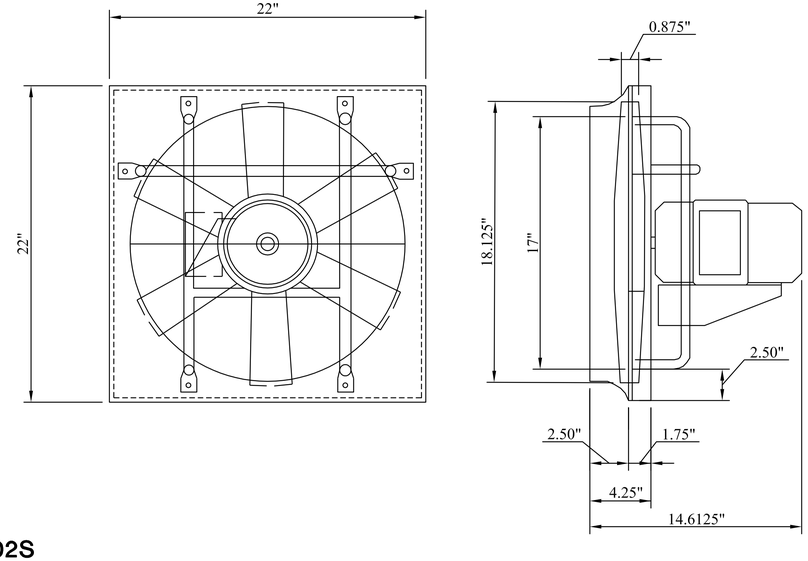

CONESTOGA-ROVERS & ASSOCIATES

Source Reference: CRA SURVEY, JUNE 8-19, 2009. INDIANA WEST SPC, US SURVEY FEET.
Project Manager: G. VALTERS
Reviewed By: G. VALTERS
Designed By: G. VALTERS
Drawn By: R. LEE
Scale: 1" = 1'
Project No: 19190-02
Report No: 044
Date: MAY, 2010
Drawing No: ST - 08

RADIO MATERIALS CORPORATION
ATTICA, INDIANA

SVE AND AIR SPARGE TREATMENT SYSTEM

TREATMENT BUILDING
AIR VENT AND FAN DETAILS

SCALE VERIFICATION
THIS BAR MEASURES 1" ON ORIGINAL. ADJUST SCALE ACCORDINGLY.

Approved

No	Revision	Date	Initial

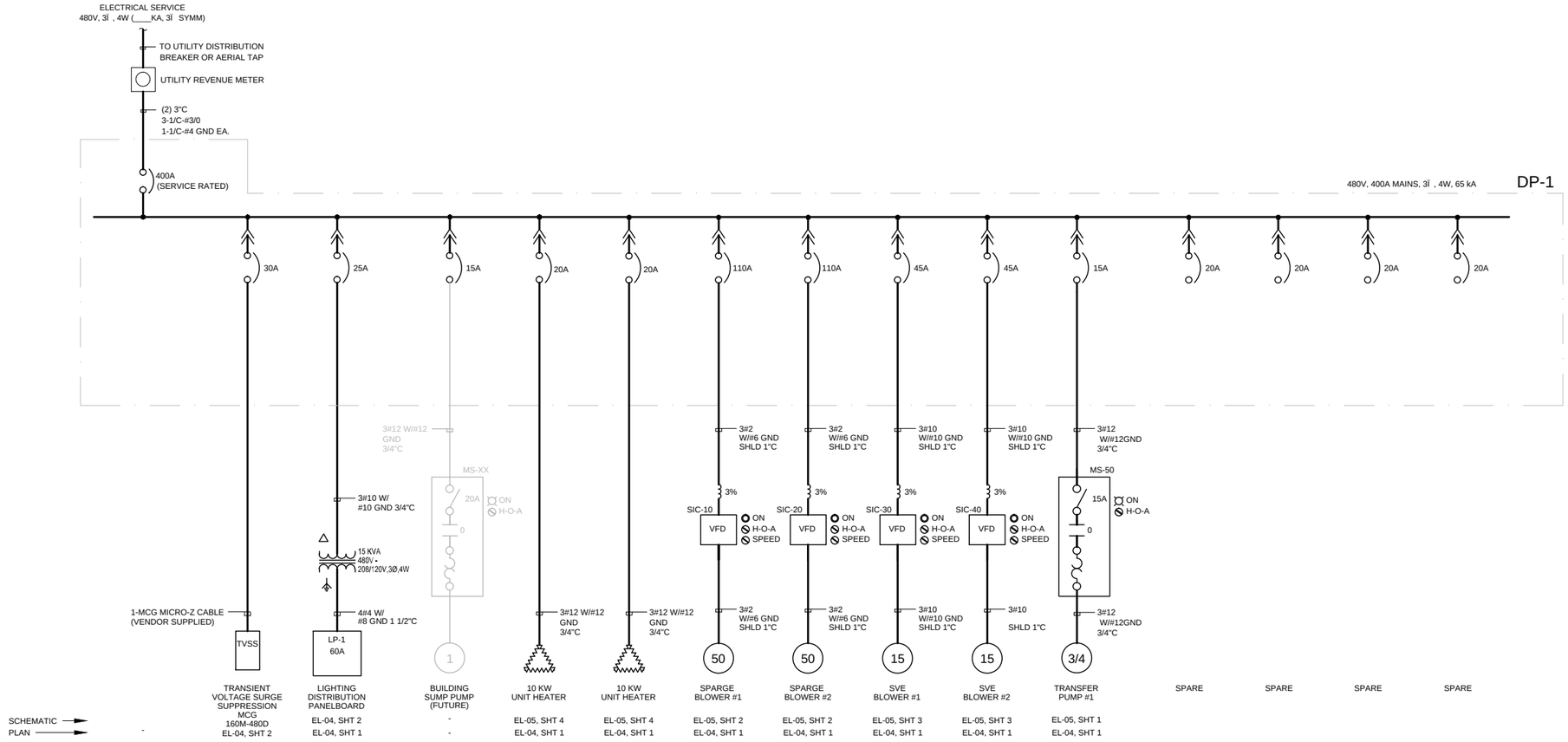

Issued for Information only
NOT FOR CONSTRUCTION

NOTE:
REFER TO DRAWING EL-04 SHT 2
FOR PANELBOARD SCHEDULE

CONESTOGA-ROVERS & ASSOCIATES

Source Reference:

Project Manager: G. WALTERS
Reviewed By: J.MICHALOWSKI
Designed By: P. DIFRANCISCO
Drawn By: P. DIFRANCISCO
Scale: NONE
Project No: 19190-02
Report No: 044
Date: JANUARY 2010
Drawing No: EL-01

19190-02(044)EL-BU001 JAN 15/2010

RADIO MATERIALS CORPORATION
ATTICA, INDIANA

SVE AND AIR SPARGE TREATMENT SYSTEM

ONE LINE
DIAGRAM

SCALE VERIFICATION
THIS BAR MEASURES 1" ON ORIGINAL. ADJUST SCALE ACCORDINGLY.

Approved

No	Revision	Date	Initial
A	REVIEW AND COMMENT	01/19/10	JWM

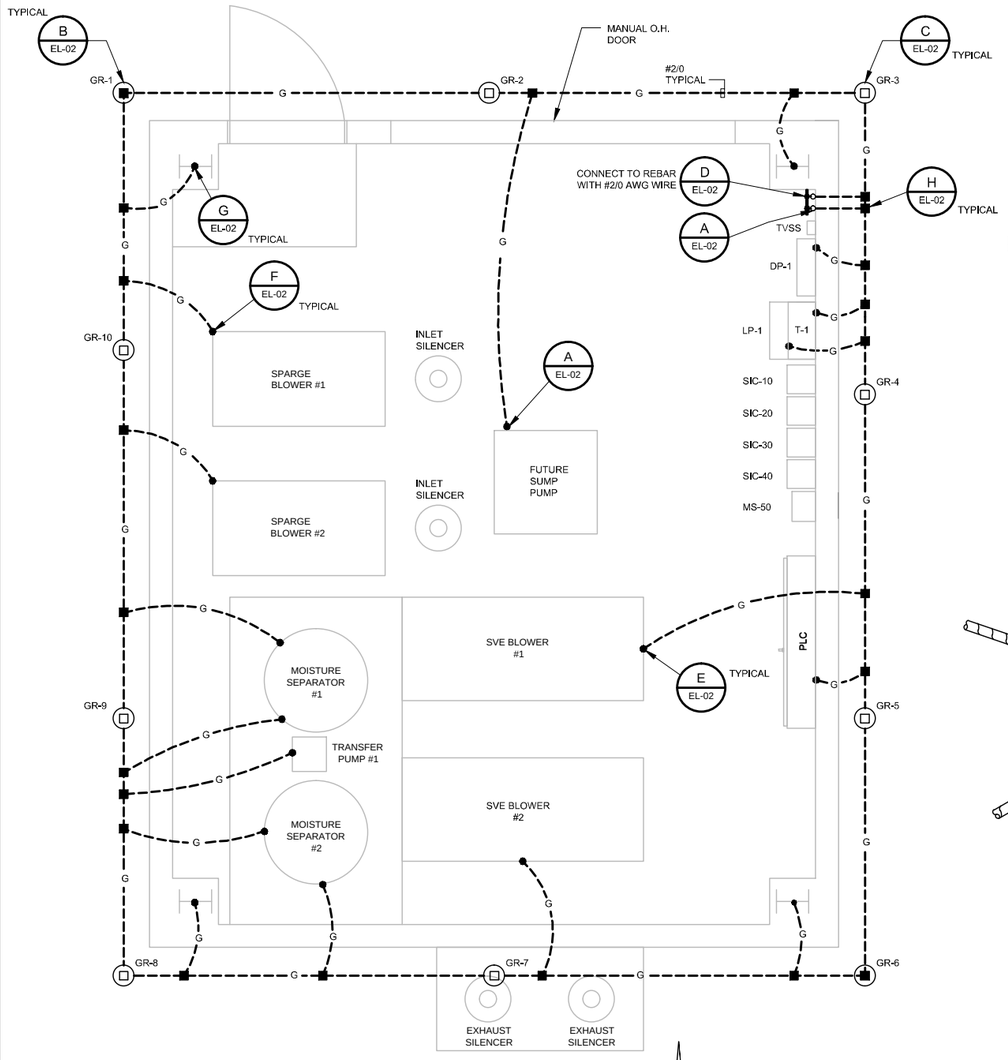

ELECTRICAL GROUNDING PLAN

SCALE: 1/2"=1'-0"

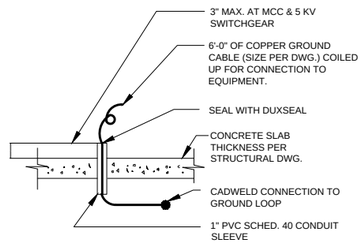

DETAIL A
EQUIPMENT GROUND CABLE STUB-UP
N.T.S.

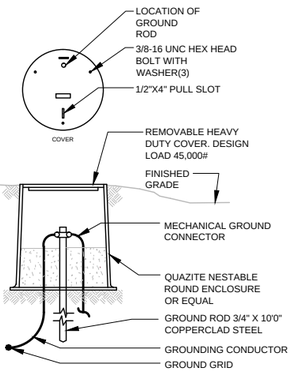

DETAIL B
GROUNDING TEST STATION DETAIL
N.T.S.

INSTALLATION NOTES:

1. NOTES, GROUNDING METHODS AND DETAILS SHOWN ARE GENERAL IN NATURE. PROVIDE MATERIALS REQUIRED TO INSTALL A COMPLETE GROUNDING SYSTEM TO SUIT PROJECT AND TO CONFORM WITH LOCAL AND NATIONAL ELECTRICAL CODES AND STANDARDS.
2. GROUND RODS SHALL BE COPPER CLAD STEEL 3/4" DIAMETER BY 10 FEET LONG.
3. ADJACENT GROUND RODS SHALL BE SPACED AND CONNECTED AS SHOWN ON DRAWINGS.
4. MAIN GROUND CONDUCTOR SHALL BE #2/0 STRANDED BARE COPPER WIRE AND SHALL BE INSTALLED AS FOLLOWS:
   a. EXTERIOR GROUNDING CONDUCTOR SHALL HAVE A MINIMUM OF 30" COVER.
   b. INTERIOR GROUNDING CONDUCTORS SHALL BE INSTALLED 12" BELOW FINISHED FLOOR.
   c. EXTERIOR GROUNDING CONDUCTORS AROUND TRANSFORMERS SHALL BE 12" BELOW FINISHED GRADE OR 6" BELOW OIL CONTAINMENT LINER. DO NOT PENETRATE LINER.
5. BENDS IN GROUNDING CONDUCTORS SHALL HAVE A 12" MINIMUM RADIUS.
6. ALL GROUNDING CONNECTIONS SHALL BE MADE TO FORM A CONTINUOUS GROUNDING SYSTEM AS FOLLOWS:
   a. ALL UNDERGROUND CONNECTIONS SHALL BE CADWELD EXCEPT FOR GROUNDING TEST WELLS.
   b. ALL ABOVE GROUND CONNECTIONS SHALL BE BY APPROVED MECHANICAL CONNECTORS.
7. LOCATE AND IDENTIFY EXPOSED GROUNDING CONDUCTORS TO MINIMIZE PHYSICAL DAMAGE.
8. AVOID COLUMN, BUILDING FOOTINGS AND/OR EQUIPMENT FOUNDATIONS DURING INSTALLATION OF GROUNDING RODS.
9. WHERE CABLE ENTERS BUILDING FROM OUTSIDE, DRILL A 1" DIAMETER HOLE OR SLEEVE FORM AT 18" DEPTH IN FOOTING WALL. WALL SLEEVE SHALL BE SCHEDULE 40, PVC CONDUIT.
10. GROUNDING CONDUCTORS TO EQUIPMENT (SIZED AS INDICATED ON DRAWINGS) SHALL BE COILED 6 FEET OR MORE AND PROTECTED FOR IMMEDIATE AND FUTURE CONNECTIONS.
11. PROVIDE SUFFICIENT SLACK OF GROUNDING CABLES IN TEST WELL SO THAT GROUND ROD CAN BE DISCONNECTED FROM GROUND GRID FOR TESTING.
12. BUILDING GROUND LOOP TO GROUND RESISTANCE SHALL NOT BE GREATER THAN 5 OHMS. INSTALL ADDITIONAL GROUND RODS IF NECESSARY TO OBTAIN THIS REQUIREMENT. INCLUDE IN THIS CONTRACT: UNIT PRICE FOR ADDITIONAL GROUND RODS AS PER UNIT AND PER FOOT BASIS. ALSO INCLUDE UNIT PRICE FOR PER FOOT FOR ADDITIONAL GROUNDING CABLE REQUIRED.
13. FOR GROUND CONNECTION TO EQUIPMENT PROVIDE COMPRESSION TYPE GROUNDING LUGS OR CONNECT TO GROUND LUGS PROVIDED WITH EQUIPMENT. VERIFY LOCATION WITH APPROVED SHOP DRAWINGS.

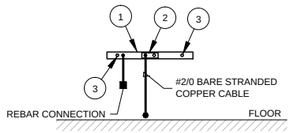

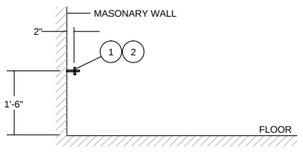

1	COPPER BUS:	3/8" x 2" x 24" WITH 9/16" DIA. HOLES, PREDRILLED TO ACCOMMODATE CONNECTORS AND MOUNTING BOLTS
2	CONNECTOR TO FLAT BAR:	BURNDY CAT. No. GB26
3	MOUNTING:	1/2" x 2 1/2" GALVAN. BOLT; 3/4" x 2" GALVAN. PIPE SPACER; LEAD CLINCH SPACER

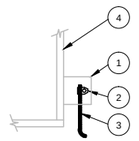

DETAIL D1

NOTE: TAB MAY BE SUBSTITUTED BY HOLE IN EQUIPMENT OR EQUIPMENT SUPPORT

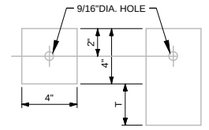

DETAIL D2
NO INSULATION TYPE

DETAIL D3
INSULATION TYPE
T= INSULATION THICKNESS

1	WELDED TAB,1/4x4" STEEL, SEE DETAILS D2 AND D3 FOR DIMENSIONS. WELD TO TOP OR SIDE OF PIPE, POST, TANK LEG OR EQUIPMENT, NOT ON BOTTOM. DO NOT WELD TO LINED PIPE OR EQUIPMENT.
2	GROUNDING CONNECTOR, CONDUCTOR TO FLAT BAR, BURNDY GB OR GC
3	GROUNDING CONDUCTOR (SIZE PER PLAN)
4	EQUIPMENT, TANK

DETAIL E
GROUNDING - TYPICAL WELDED TAB CONNECTION
N.T.S.

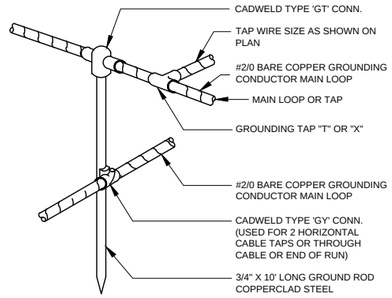

DETAIL C
CONDUCTOR TO GROUND ROD CONNECTION DETAIL
N.T.S.

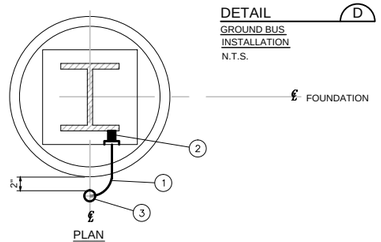

PLAN

DETAIL D
GROUND BUS INSTALLATION
N.T.S.

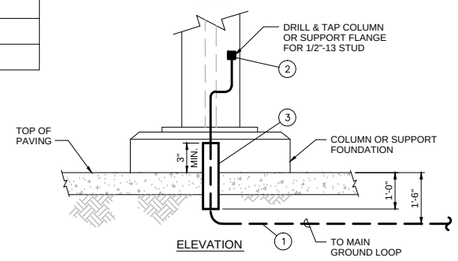

ELEVATION

DETAIL G
COLUMN GROUNDING
N.T.S.

BILL OF MATERIAL		
ITEM	QUANTITY	DESCRIPTION
1	AS REQ'D	WIRE, #2/O AWG, THW, GREEN
2	1	SERVIT POST, BURNDY #KC26 OR APPROVED EQUAL
3	AS REQ'D	1" PVC CONDUIT, SCH. 80

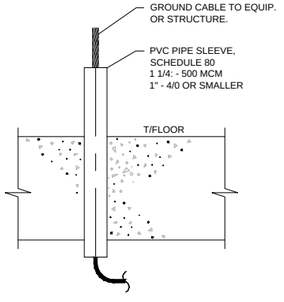

DETAIL F
GROUND CABLE STUB-UP
N.T.S.

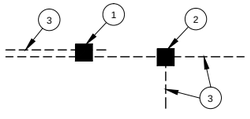

1	CONNECTOR:	COMPRESSION TYPE, BURNDY YGHC-C (PARALLEL CABLES)
2	CONNECTOR:	COMPRESSION TYPE, BURNDY YGL-C (CABLES CROSSING)
3	GROUNDING CONDUCTOR:	STRANDED COPPER CABLE (BARE - UNDERGROUND, THHN/THWN GREEN INSULATION - ABOVE GROUND, SIZE PER PLAN)

DETAIL H
CABLE TO CABLE CONNECTION
N.T.S.

LEGEND

- G — BARE GROUND CONDUCTOR - BURIED 30" BELOW GRADE
- G — GROUND CONDUCTOR - RUN EXPOSED
- GROUND CONNECTOR
- GROUND ROD TEST WELL
- GROUND ROD

N

Issued for Information only
NOT FOR CONSTRUCTION

CONESTOGA-ROVERS & ASSOCIATES

Source Reference:

Date:	JANUARY 2010
Drawn By:	P. DIFRANCISCO
Designed By:	P. DIFRANCISCO
Reviewed By:	J.MICHALOWSKI
Project Manager:	G. WALTERS
Scale:	AS SHOWN
Project No:	19190-02
Report No:	044
Drawing No:	EL-02

19190-02(044)EL-BU002 JAN 15/2010

RADIO MATERIALS CORPORATION
ATTICA, INDIANA

SVE AND AIR SPARGE TREATMENT SYSTEM

GROUNDING PLAN AND DETAILS

SCALE VERIFICATION
THIS BAR MEASURES 1" ON ORIGINAL. ADJUST SCALE ACCORDINGLY.

Approved

No	Revision	Date	Initial
A	REVIEW AND COMMENT	01/19/10	JWM

LEGEND

WATTAGE — 70W — D — FIXTURE SYMBOL
MOUNTING HEIGHT — 10'-0" — LP- — CIRCUIT No.

"HOT" WIRE & CIRCUIT No. (BLACK) — 2 — G — 120VAC HOMERUN BACK TO PANELBOARD
GROUND WIRE (GREEN)
NEUTRAL WIRE (WHITE OR GRAY)

"HOT" WIRE & CIRCUIT No. (BLACK) — 2 — G — 208 OR 480 VAC HOMERUN BACK TO PANELBOARD AS INDICATED 208V(480V)
GROUND WIRE (GREEN)
NEUTRAL WIRE (WHITE OR GRAY)

LIGHTING PLAN NOTES:

1. SYMBOL LIST, LIGHTING LEGEND LOCATED ON THIS DWG PANELBOARD SCHEDULE FOR LP1 DWG EL-04 SHT 2.
2. EMERGENCY LIGHT TO BE CONNECTED INTO NORMAL LIGHTING BRANCH CIRCUITING AHEAD OF LOCAL SWITCHING AND BUILDING LIGHTING CONTROL.
3. CENTER EMERGENCY FIXTURE & MOUNT ABOVE DOOR AS REQ'D

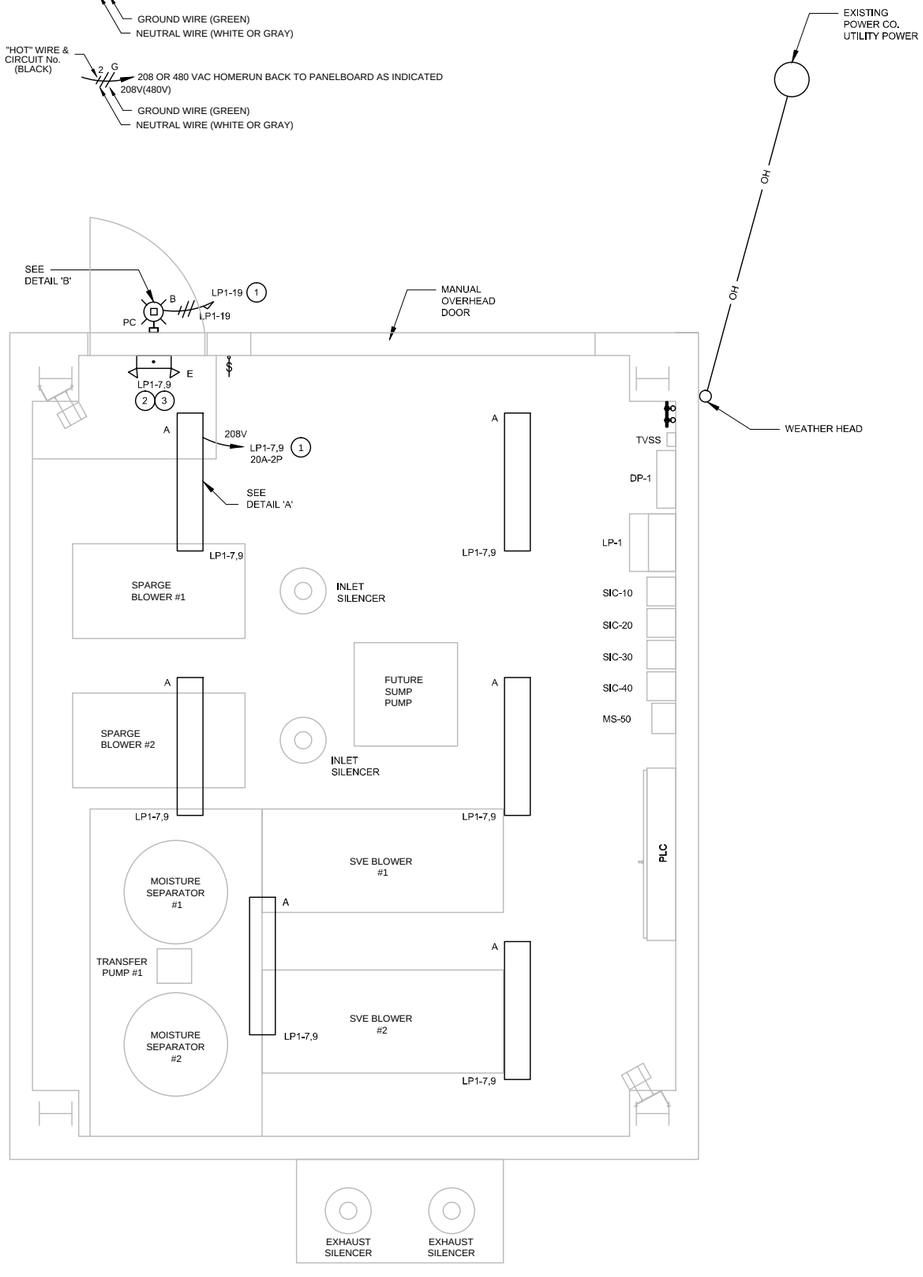

ELECTRICAL LIGHTING PLAN

SCALE: 1/2"=1'-0"

LIGHTING GENERAL NOTES

1. ALL CONDUIT TO BE RIGID (RGS), EXCEPT AS NOTED. MINIMUM CONDUIT SIZE TO BE 3/4".
2. EXPOSED CONDUIT TO BE SUPPORTED EVERY 10'-0" MINIMUM (RMC) AND SHALL BE INSTALLED IN A MANNER SUCH THAT THEY DO NOT CONSTITUTE A TRIPPING HAZARD OR INFRINGE UPON THE 8'-0" MINIMUM HEAD CLEARANCE.
3. ALL WALL-THRU CONDUIT PENETRATIONS TO BE WEATHER SEALED WITH APPROVED SEALER.
4. ALL LIGHTING WIRING TO BE No. 12 AWG THHN, UNLESS OTHERWISE NOTED.
5. EACH LIGHTING CIRCUIT SHALL BE PROVIDED WITH A DEDICATED NEUTRAL.
6. ALL WIRE SHALL BE TAGGED WITH APPROPRIATE CIRCUIT NUMBERS AT BOTH TERMINAL ENDS.
7. SUPPORTS AND HANGERS: ALL EQUIPMENT/DEVICE/FIXTURE SUPPORTS AND HANGERS SHALL BE HOT DIPPED GALVANIZED STEEL ANGLE OR CHANNEL OR PIPE OR OTHER STRUCTURAL SHAPE OF 1/4" THICK MINIMUM. DO NOT USE RNC CONDUIT AS EQUIPMENT/DEVICE/FIXTURE SUPPORTING MEMBER.

SYMBOL	DESCRIPTION
A	COLUMBIA 208V VAPORTIGHT FLUORESCENT STRIP (2-T8 32 WATT) CAT#LUN4232EU COMPLETE WITH UNIVERSAL COLD WEATHER START BALLAST TOTAL VA INPUT 100VA OR EQUAL.
B PC	HUBBELL 120V WALL-PAK LIGHTING FIXTURE-METAL HALIDE-100W CAT. #PRS3150P18BZQSSLPBT-1 TO INCLUDE PHOTO CONTROL MOUNTING HEIGHT : SEE DETAIL B. TOTAL VA INPUT 150VA OR EQUAL.
E	HOLOPHANE 208V COMBO EMERGENCY LIGHTING & LED EXIT SIGN CAT. #MSTDLNCWWRS2 MOUNTING HEIGHT TO BE 8'-0"BOF UNLESS NOTED OTHERWISE ON PLAN OR EQUAL.
$	HUBBELL SPST TOGGLE SWITCH, 20A, 208V CAT. #1221BK, MOUNTED IN BOX #6080 W/COVER #95071 TO BE MOUNTED 4'-6" AFF UNLESS NOTED OTHERWISE ON PLAN OR EQUAL.

Issued for Information only
NOT FOR CONSTRUCTION

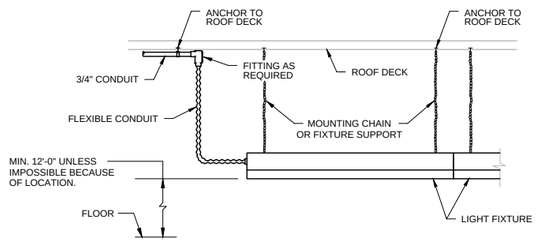

DETAIL A
CEILING HUNG FLUORESCENT FIXTURE
N.T.S.
EL-04

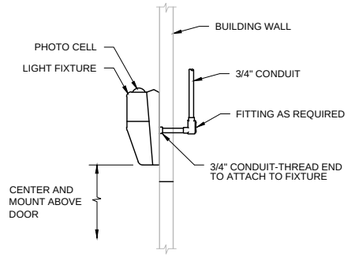

DETAIL B
WALL MOUNTED OUTDOOR FIXTURE
N.T.S.

CONESTOGA-ROVERS & ASSOCIATES

Source Reference:
Project Manager: G. WALTERS
Reviewed By: J.MICHALOWSKI
Designed By: P. DIFRANCESCO
Drawn By: P. DIFRANCESCO
Date: JANUARY 2010
Project No: 19190-02
Report No: 044
Scale: AS SHOWN
Drawing No: EL-03

19190-02(044)EL-BU003 JAN 15/2010

RADIO MATERIALS CORPORATION
ATTICA, INDIANA

SVE AND AIR SPARGE TREATMENT SYSTEM

LIGHTING PLAN AND DETAILS

SCALE VERIFICATION
THIS BAR MEASURES 1" ON ORIGINAL. ADJUST SCALE ACCORDINGLY.

Approved

No	Revision	Date	Initial
A	REVIEW AND COMMENT	01/19/10	JWM

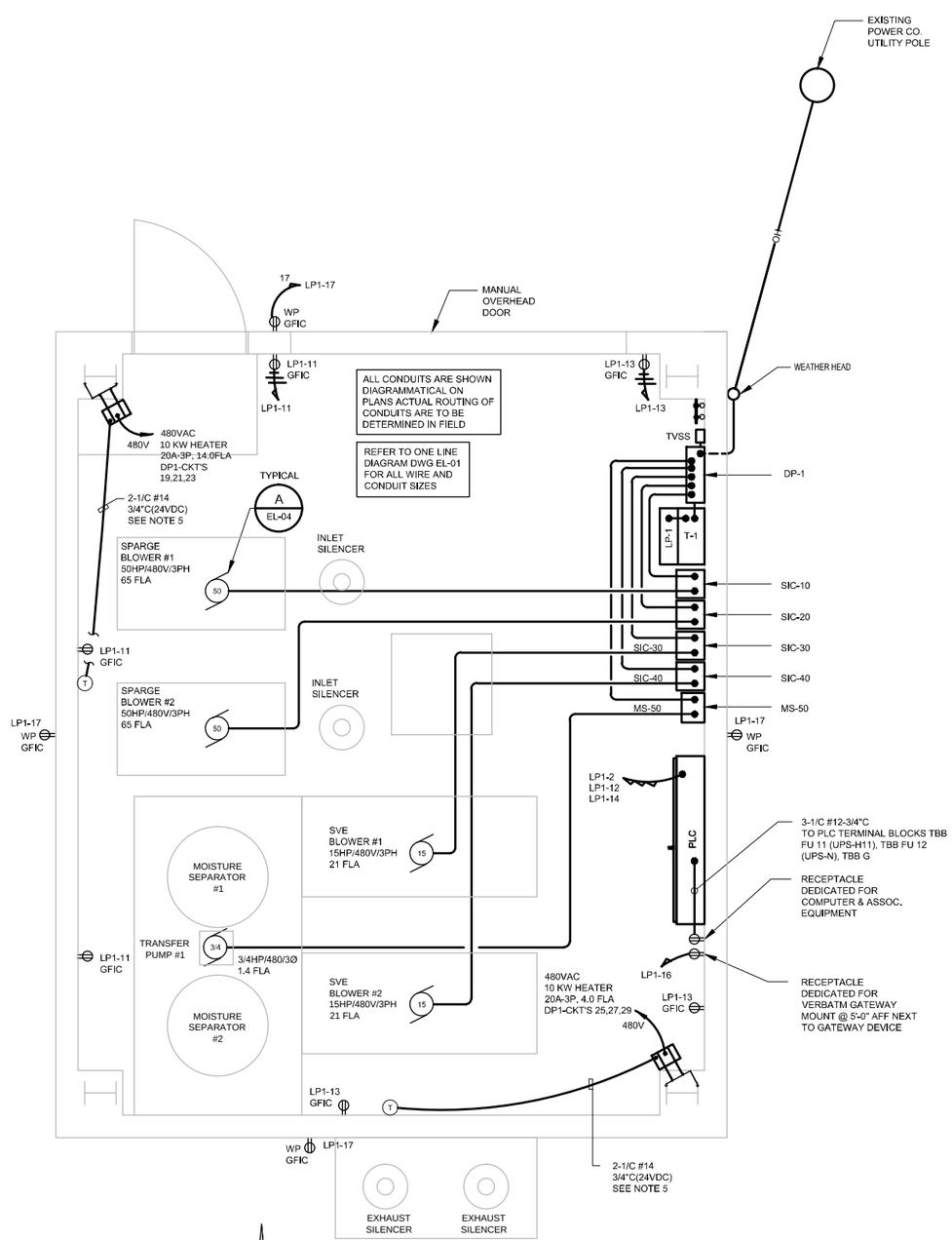

ELECTRICAL POWER PLAN

SCALE: 1/2"=1'-0"

NOTES

1. ALL CONDUIT TO BE RIGID (RGS), EXCEPT AS NOTED. MINIMUM CONDUIT SIZE TO BE 3/4".
2. CONDUIT TO BE SUPPORTED EVERY 10'-0" MINIMUM (RGS) AND SHALL BE INSTALLED IN A MANNER SUCH THAT THEY DO NOT CONSTITUTE A TRIPPING HAZARD OR INFRINGE UPON THE 8'-0" MINIMUM HEAD CLEARANCE.
3. ALL WALL-THRU CONDUIT PENETRATIONS TO BE WEATHER SEALED WITH APPROVED SEALER.
4. ALL WIRE SHALL BE TAGGED WITH APPROPRIATE CIRCUIT NUMBERS AT BOTH TERMINAL ENDS.
5. CONTRACTOR SHALL STAGE UNIT HEATER THERMOSTAT(S) AS FOLLOWS:
   ONLY (1) UNIT HEATER WILL OPERATE UNTIL BUILDING TEMPERATURE FALLS BELOW 45 DEG. THEN BOTH HEATERS WILL PROVIDE HEAT AND MAINTAIN A SUITABLE TEMPERATURE INSIDE BUILDING. CONTRACTOR SHALL COORDINATE WITH OWNER FOR APPROVED OPERATING TEMPERATURES.
6. REFER TO DWG EL-04 SHT 2 FOR PANELBOARD SCHEDULES.

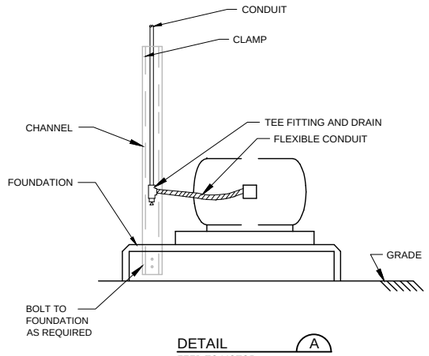

DETAIL A

FEED TO MOTOR

N.T.S.

LEGEND

M	MANUAL MOTOR STARTER 120V, 20A HEAVY DUTY HUBBELL OR EQUAL
TVSS	MCG 160M-480D
LP1	SQ-D NQOD NEMA 12, 100A MAINS, 30 CKT, W/60A-3P M.C.B. OR EQUAL
DP1	SQ-D NF NEMA 12, 400A MAINS, 42 CKT, W/400A-3P SERVICE RATED M.C.B. OR EQUAL
	480V/3PH/60HZ 10 KW UNIT HEATER 14.0 FLA
XFMR	SQ-D CLASS 7400 EE WATCHDOG 15KVA TRANSFORMER 80 DEG C RISE 480V DELTA PRIMARY 208/120V SECONDARY 60HZ CAT# EE15T3HB.
M	MOTOR (HP INDICATED ON PLAN)
GFIC	HUBBELL GROUND FAULT INTERRUPTER DUPLEX RECEPTACLE, 20A, 125V, 3-WIRE, GROUNDED , MOUNTED IN STEEL BOX AND COVER TO BE MOUNTED 4'-0" AFF UNLESS NOTED OTHERWISE ON PLAN OR EQUAL.
GFIC WP	HUBBELL WEATHER PROOF GROUND FAULT INTERRUPTER DUPLEX RECEPTACLE, 20A, 125V, 3-WIRE, GROUNDED MOUNTED IN A STEEL OUTDOOR RATED BOX AND COVER TO BE MOUNTED 4'-0" AFG UNLESS NOTED OTHERWISE ON PLAN OR EQUAL.
T	THERMOSTAT
SIC-XX	ROCKWELL AUTOMATION POWER FLEX 70 AC DRIVE, 480VAC, 3PH, 40AMPS, WALL MOUNT NEMA 12 CAT#20AD040C0AYNAEC0. REFER TO ELECTRICAL SPECIFICATIONS FOR COMPLETE DESCRIPTION.
MS-XX	ALLEN BRADLEY BUL. 503 NEMA 12 FVNR SIZE 0 COMBINATION STARTER COMPLETE WITH HAND-OFF-AUTO SELECTOR SWITCH, PILOT LIGHT, 120VAC CONTROL CIRCUIT TRANSFORMER AND (1) N.O. & (1) N.C. AUXILIARY CONTACT BLOCK. REFER TO ELECTRICAL SPECIFICATIONS FOR COMPLETE DESCRIPTION.

"HOT" WIRE & CIRCUIT No. (BLACK) — 2 — G

120VAC HOMERUN BACK TO PANELBOARD 2#12 & 1 #12GND IN 3/4"C (UNLESS OTHERWISE NOTED)

GROUND WIRE (GREEN)

NEUTRAL WIRE (WHITE OR GRAY)

480V — 480 VAC HOMERUN BACK TO PANELBOARD AS INDICATED 3#12 & 1 #12GND IN 3/4"C (UNLESS OTHERWISE NOTED)

Issued for information only
NOT FOR CONSTRUCTION

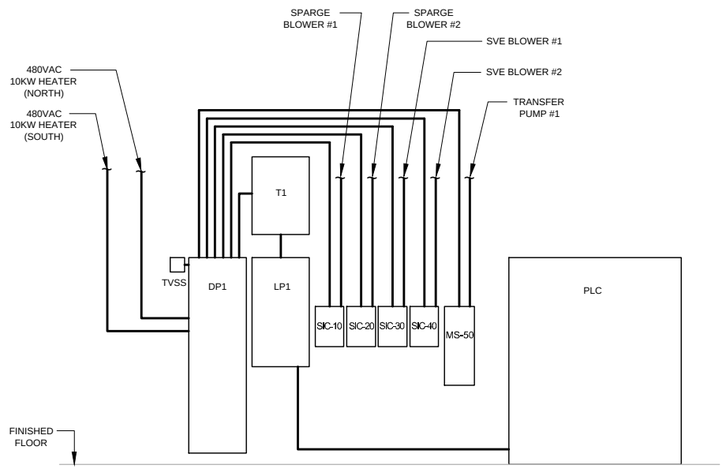

SECTION A

EAST ELEVATION

SCALE: 1/2"=1'-0"

CONESTOGA-ROVERS & ASSOCIATES

Source Reference:

Project Manager: G. WALTERS | Reviewed By: J.MICHALOWSKI | Designed By: P. DIFRANCISCO | Drawn By: P. DIFRANCISCO | Date: JANUARY 2010

Scale: AS SHOWN | Project No: 19190-02 | Report No: 044 | Drawing No: EL-04 SHT. 1

19190-02(044)EL-BU004 JAN 15/2010

SCALE VERIFICATION
THIS BAR MEASURES 1" ON ORIGINAL. ADJUST SCALE ACCORDINGLY.

Approved

RADIO MATERIALS CORPORATION
ATTICA, INDIANA

SVE AND AIR SPARGE TREATMENT SYSTEM

POWER PLAN AND DETAILS

No	Revision	Date	Initial
A	REVIEW AND COMMENT	01/19/10	JWM

DISTRIBUTION PANEL "DP1" SCHEDULE
277/480V, 60Hz, 3Ø , 4 WIRE & GND

SERVICE DESCRIPTION	#	WATTS	WIRE SIZE	CKT. NO.	BRANCH CB	A B C N	BRANCH CB	CKT. NO.	WIRE SIZE	WATTS	#	SERVICE DESCRIPTION
TVSS	*	*	*	1	30A		45A	2	10	10080		
	*	*	*	3				4	10	10080	1	SVE BLOWER #1 (15HP)
	*	*	*	5				6	10	10080		
15 KVA TRANSFORMER		8640	10	7	25A		45A	8	10	10080		
	1	8640	10	9				10	10	10080	1	SVE BLOWER #2 (15HP)
		8640	10	11				12	10	10080		
BLD'G SUMP PUMP		864	12	13	15A		15A	14	12	672		
	1	864	12	15				16	12	672	1	TRANSFER PUMP #1 (3/4HP)
		864	12	17				18	12	672		
UNIT HEATER #1 (10KW)		6720	12	19	20A		20A	20	*	*	*	SPARE
	1	6720	12	21				22	*	*	*	SPARE
		6720	12	23				24	*	*	*	SPARE
UNIT HEATER #2 (10KW)		6720	12	25	20A		20A	26	*	*	*	SPARE
	1	6720	12	27				28	*	*	*	SPACE
		6720	12	29				30	*	*	*	SPACE
SPARGE BLOWER #1 (50HP)		31200	4	31	110A			32	*	*	*	SPACE
	1	31200	4	33				34	*	*	*	SPACE
		31200	4	35				36	*	*	*	SPACE
SPARGE BLOWER #2 (50HP)		31200	4	37	110A			38	*	*	*	SPACE
	1	31200	4	39				40	*	*	*	SPACE
		31200	4	41				42	*	*	*	SPACE
						N G						

PANEL MTD.:	SURFACE	ENCLOSURE:	NEMA12
MANUFACTURER:	SQUARE D	TYPE:	NF
MAIN BREAKER:	400A	MAIN LUGS:	400A
FEEDER SIZE:	(2) 3"C 3-1/C #3/0 & 1-1/C #4GND	FEEDER ENTRY:	TOP
FEED THRU LUGS:	NO		

1. # - NO. OF FIXTURES OR RECEPTACLES
2. * - DETAILS NOT AVAILABLE
3. RECEPTACLE CIRC. LOADING BASED ON 200W/OUTLET
4. PROVIDE BLOT ON CIRCUIT BREAKERS, CLIP ON CIRCUIT BREAKERS SHALL NOT BE ACCEPTABLE.
5. PROVIDE COPPER BUS, ALUMINUM SHALL NOT BE ACCEPTABLE.
6. PROVIDE FULLY RATED CIRCUIT BREAKERS, SERIES RATING CIRCUIT BREAKERS SHALL NOT BE ACCEPTABLE.
7. PROVIDE LOCKABLE COVER.
8. PROVIDE SOLID NEUTRAL.

T.C.L. - 283 AMPS / 235.7 KVA

LIGHTING PANEL "LP-1" SCHEDULE
208/120V, 60Hz, 3Ø , 4 WIRE

SERVICE DESCRIPTION	#	WATTS	WIRE SIZE	CKT. NO.	BRANCH CB	A B C N	BRANCH CB	CKT. NO.	WIRE SIZE	WATTS	#	SERVICE DESCRIPTION
TVSS		*	12	1	20A		20A	2	12	1000	1	PLC CONTROL PANEL
		*	12	3	20A		20A	4	-	*		SPARE
		*	12	5	20A		20A	6	-	*		SPARE
TREATMENT BUILDING LIGHTS	12	600	12	7	20A		20A	8	-	*		SPARE
				9	20A		20A	10	-	*		SPARE
RECEPTACLES	3	600	12	11	20A		20A	12	12	1000		PLC CONTROL PNL - 120V FIELD DEVICES
RECEPTACLES	3	600	12	13	20A		20A	14	12	1000		PLC CONTROL PNL - 120V FIELD DEVICES
EXHAUST FAN EF-1 (1/3HP)	1	900	12	15	15A		20A	16	12	200		VERBATM GATEWAY
EXTERIOR RECEPTACLES	4	800	12	17	20A		20A	18	-	*		SPARE
EXTERIOR LIGHTS	1	150	12	19	20A		20A	20	-	*		SPARE
						N G						

PANEL MTD.:	SURFACE	ENCLOSURE:	NEMA 12
MANUFACTURER:	SQUARE-D	TYPE:	NQOD
MAIN BREAKER:	60A (QOB)	MAIN LUGS:	100A
FEEDER SIZE:	4#4 & 1#8 GND	FEEDER ENTRY:	TOP

T.C.L. - 21.2 AMPS / 7.66 KVA

Issued for Information only
NOT FOR CONSTRUCTION

CONESTOGA-ROVERS & ASSOCIATES

Source Reference:

Date: JANUARY 2010
Drawn By: P. DIFRANCISCO
Designed By: P. DIFRANCISCO
Reviewed By: J.MICHALOWSKI
Project Manager: G. WALTERS
Report No: 044
Project No: 19190-02
Scale: AS SHOWN
Drawing No: EL-04 SHT. 2

19190-02(044)EL-B0022 JAN 15/2010

RADIO MATERIALS CORPORATION
ATTICA, INDIANA

SVE AND AIR SPARGE TREATMENT SYSTEM

PANELBOARD
SCHEDULES

SCALE VERIFICATION
THIS BAR MEASURES 1" ON ORIGINAL. ADJUST SCALE ACCORDINGLY.

Approved

No	Revision	Date	Initial
A	REVIEW AND COMMENT	01/19/10	WMC

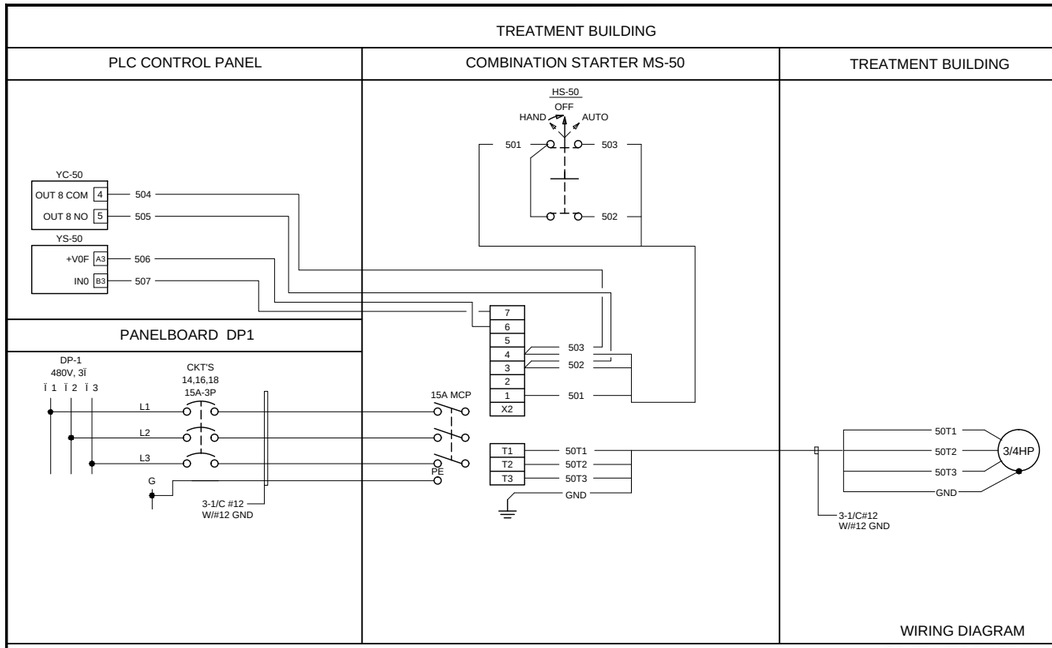

WIRING DIAGRAM

SCHEMATIC DIAGRAM

TRANSFER PUMP #1 P50

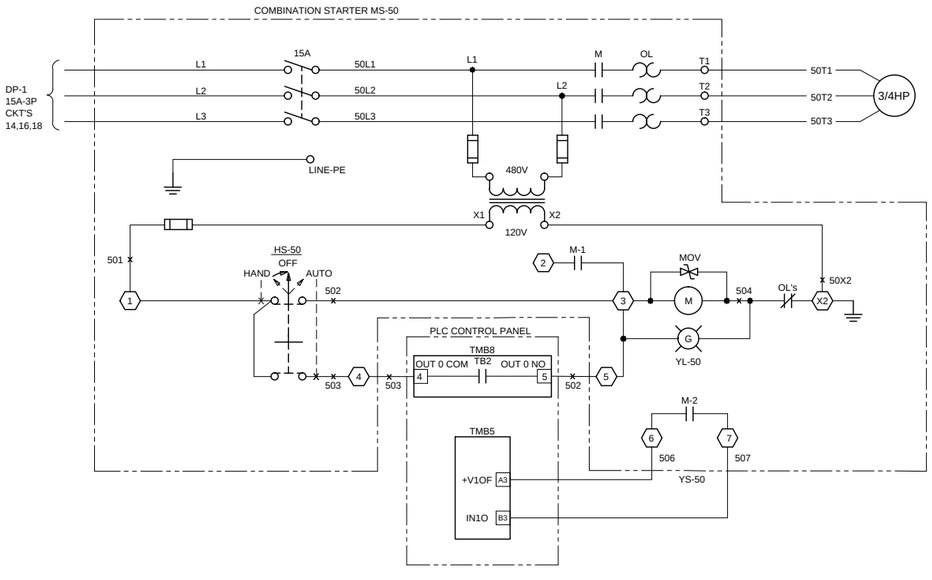

Issued for information only
NOT FOR CONSTRUCTION

CONESTOGA-ROVERS & ASSOCIATES

Source Reference:

Project Manager: G. WALTERS
Reviewed By: J.MICHALOWSKI
Designed By: P. DIFRANCISCO
Scale: NONE
Project No: 19190-02
Report No: 044
Date: JANUARY 2010
Drawn By: M. GALLEY
Drawing No: EL-05 SHT. 1

19190-02(044)EL-BU005 JAN 15/2010

RADIO MATERIALS CORPORATION
ATTICA, INDIANA

SVE AND AIR SPARGE TREATMENT SYSTEM

SCHEMATIC WIRING DIAGRAMS

SCALE VERIFICATION
THIS BAR MEASURES 1" ON ORIGINAL. ADJUST SCALE ACCORDINGLY.

Approved

No	Revision	Date	Initial
A	REVIEW AND COMMENT	01/19/10	JWM

TREATMENT BUILDING

DP1	VARIABLE SPEED DRIVE IN TREATMENT ROOM	BLOWER MOTOR IN TREATMENT ROOM

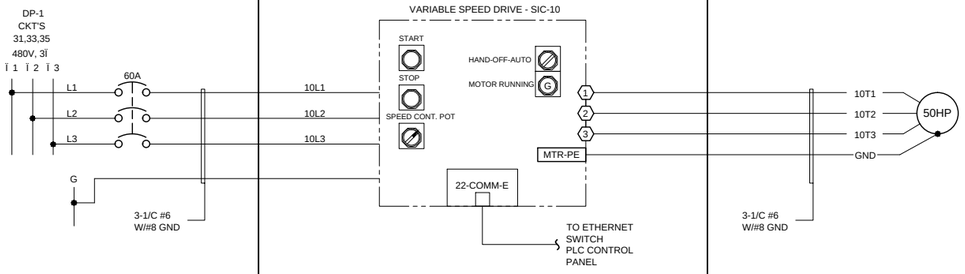

WIRING DIAGRAM

SCHEMATIC DIAGRAM

SPARGE
BLOWER #1
B10

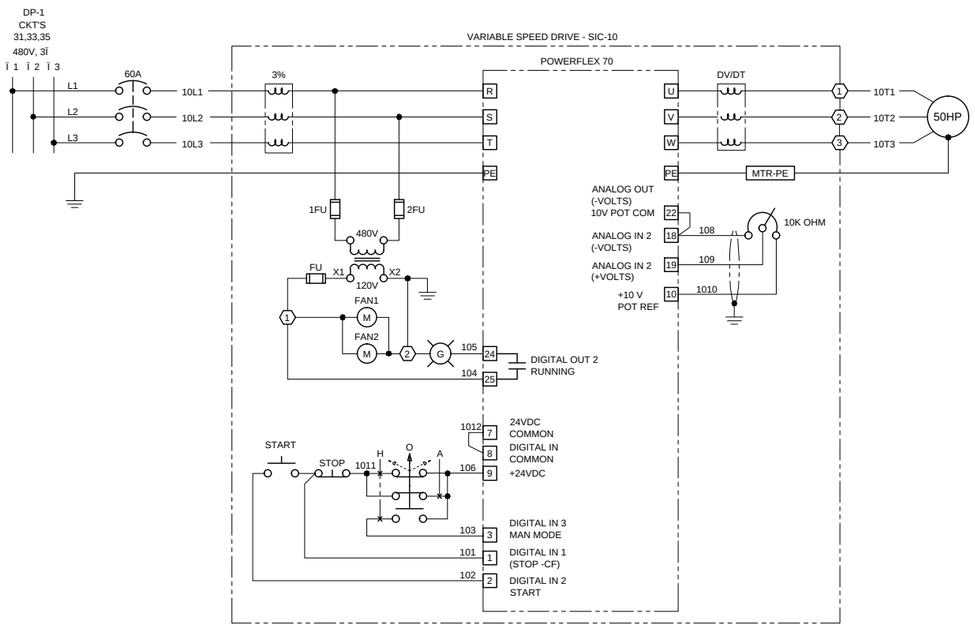

TREATMENT BUILDING

DP1	VARIABLE SPEED DRIVE IN TREATMENT ROOM	BLOWER MOTOR IN TREATMENT ROOM

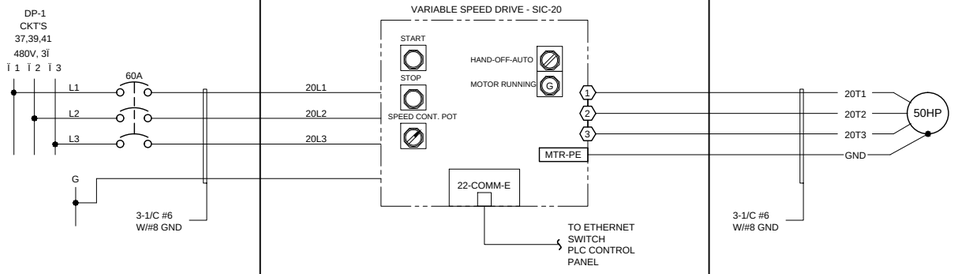

Issued for Information only
NOT FOR CONSTRUCTION

WIRING DIAGRAM

SCHEMATIC DIAGRAM

SPARGE
BLOWER #2
B20

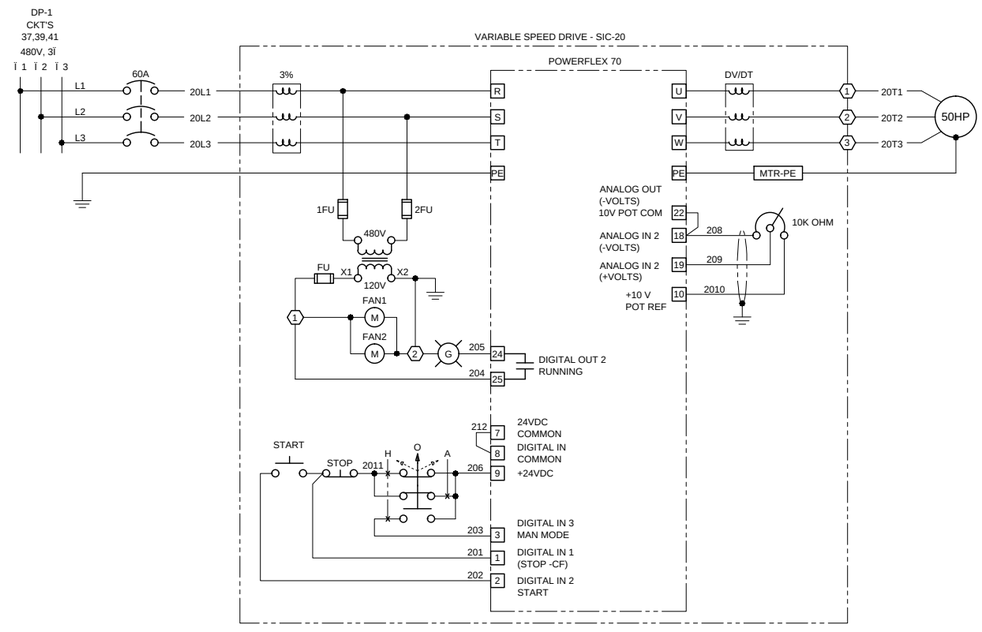

CONESTOGA-ROVERS & ASSOCIATES

Date: JANUARY 2010
Drawn By: M. GALLEY
Designed By: P. DIFRANCISCO
Reviewed By: J.MICHALOWSKI
Project Manager: G. WALTERS
Source Reference:
Project No: 19190-02
Report No: 044
Scale: NONE
Drawing No: EL-05 SHT. 2

19190-02(044)EL-BU006 JAN 15/2010

RADIO MATERIALS CORPORATION
ATTICA, INDIANA

SVE AND AIR SPARGE TREATMENT SYSTEM

SCHEMATIC WIRING
DIAGRAMS

SCALE VERIFICATION
THIS BAR MEASURES 1" ON ORIGINAL. ADJUST SCALE ACCORDINGLY.

Approved

No	Revision	Date	Initial
A	REVIEW AND COMMENT	01/19/10	WMK

TREATMENT BUILDING		
DP1	VARIABLE SPEED DRIVE IN TREATMENT ROOM	BLOWER MOTOR IN TREATMENT ROOM

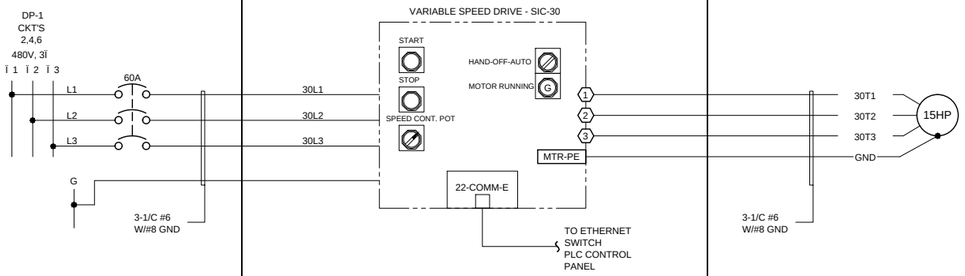

WIRING DIAGRAM

SCHEMATIC DIAGRAM

SVE
BLOWER #1
B30

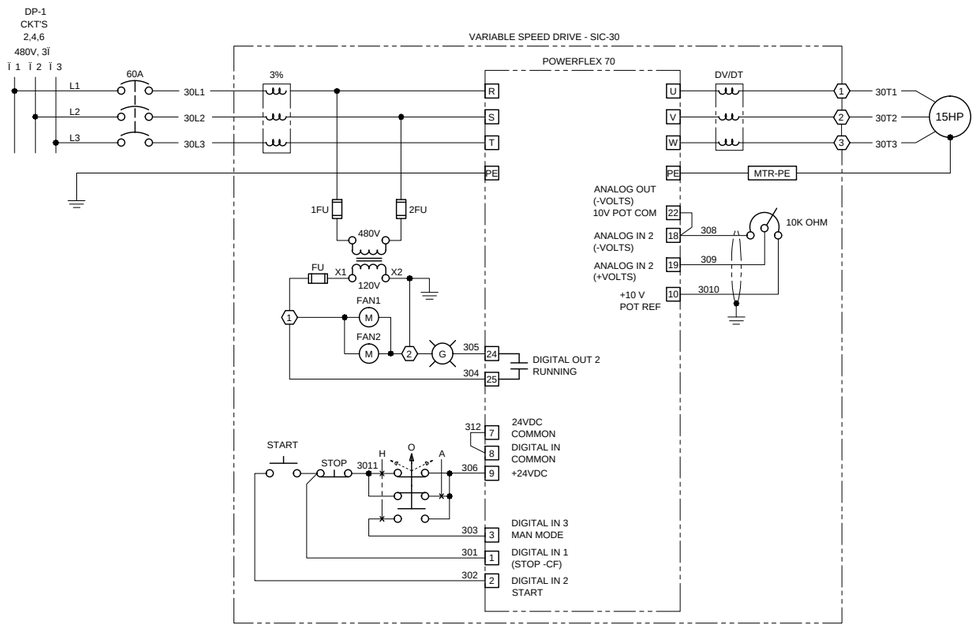

TREATMENT BUILDING		
DP1	VARIABLE SPEED DRIVE IN TREATMENT ROOM	BLOWER MOTOR IN TREATMENT ROOM

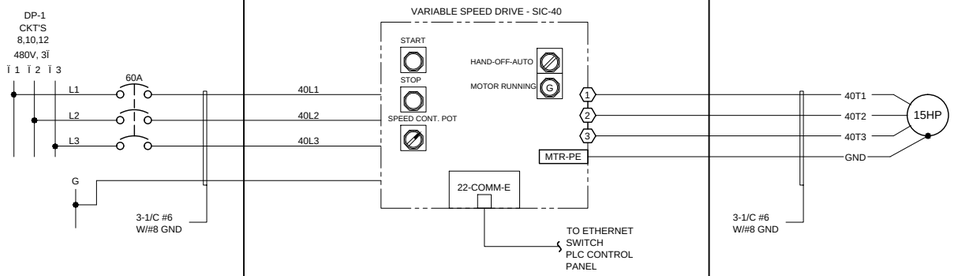

Issued for Information only
NOT FOR CONSTRUCTION

WIRING DIAGRAM

SCHEMATIC DIAGRAM

SVE
BLOWER #2
B40

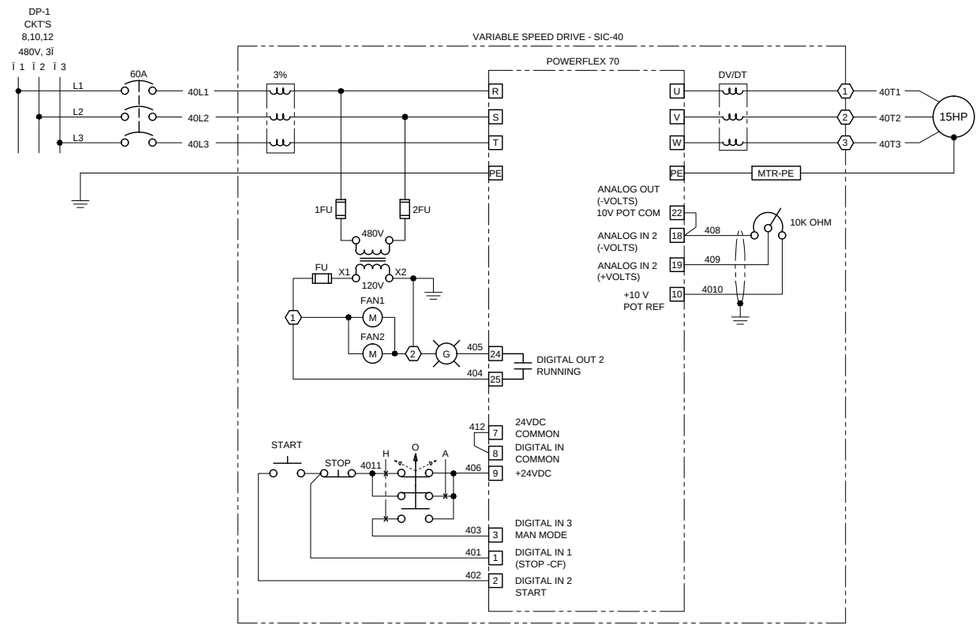

CONESTOGA-ROVERS & ASSOCIATES

Date: JANUARY 2010
Drawn By: M. GALLEY
Designed By: P. DIFRANCISCO
Reviewed By: J.MICHALOWSKI
Project Manager: G. WALTERS
Source Reference:
Project No: 19190-02
Report No: 044
Scale: NONE
Drawing No: EL-05 SHT. 3

19190-02(044)EL-BU007 JAN 15/2010

RADIO MATERIALS CORPORATION
ATTICA, INDIANA

SVE AND AIR SPARGE TREATMENT SYSTEM

SCHEMATIC WIRING
DIAGRAMS

SCALE VERIFICATION
THIS BAR MEASURES 1" ON ORIGINAL. ADJUST SCALE ACCORDINGLY.

Approved

No	Revision	Date	Initial
A.	REVIEW AND COMMENT	01/19/10	WMK

DP1

TREATMENT BUILDING

UNIT HEATER NORTH

DP1

TREATMENT BUILDING

UNIT HEATER SOUTH

DP1

TREATMENT BUILDING

LIGHTING POWER PANELBOARD LP-1

Issued for information only
NOT FOR CONSTRUCTION

CONESTOGA-ROVERS & ASSOCIATES

Source Reference:

Project Manager: G. WALTERS
Reviewed By: J.MICHALOWSKI
Designed By: P. DIFRANCISCO
Drawn By: M. GALLEY
Date: JANUARY 2010
Project No: 19190-02
Report No: 044
Scale: NONE
Drawing No: EL-05 SHT. 4

19190-02(044)EL-BU020 JAN 15/2010

RADIO MATERIALS CORPORATION
ATTICA, INDIANA

SVE AND AIR SPARGE TREATMENT SYSTEM

SCHEMATIC WIRING DIAGRAMS

SCALE VERIFICATION
THIS BAR MEASURES 1" ON ORIGINAL. ADJUST SCALE ACCORDINGLY.

Approved

No	Revision	Date	Initial
A	REVIEW AND COMMENT	01/19/10	JWM

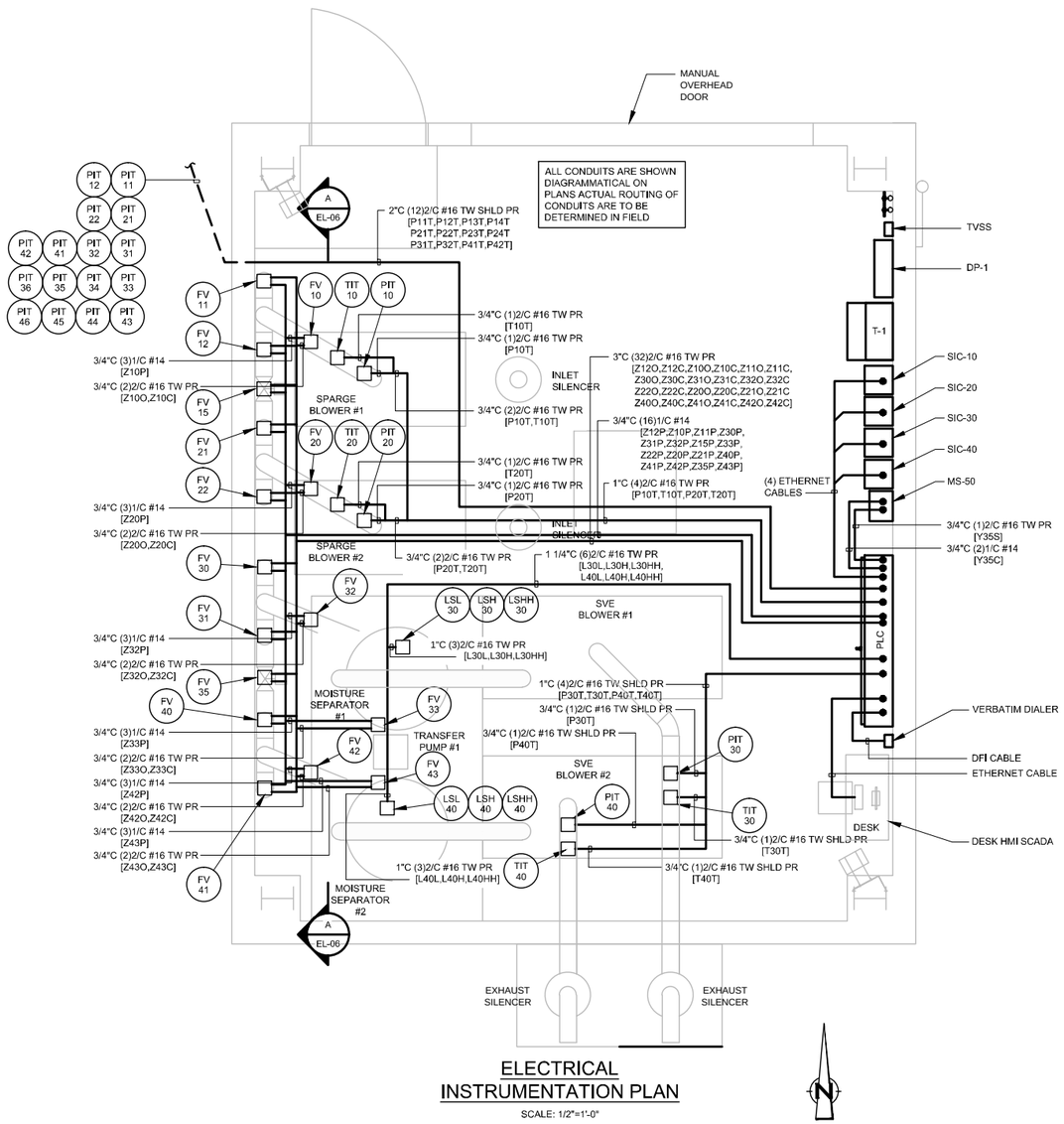

ELECTRICAL INSTRUMENTATION PLAN

SCALE: 1/2"=1'-0"

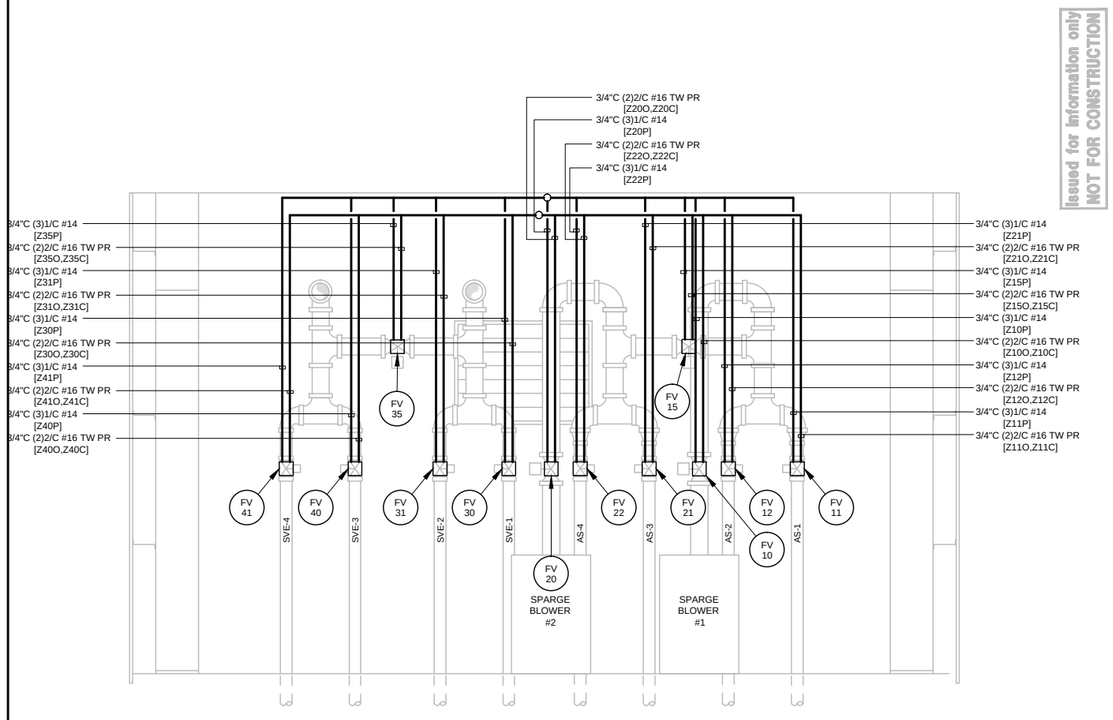

Issued for Information only
NOT FOR CONSTRUCTION

A ELEVATION

1/2"=1'-0"

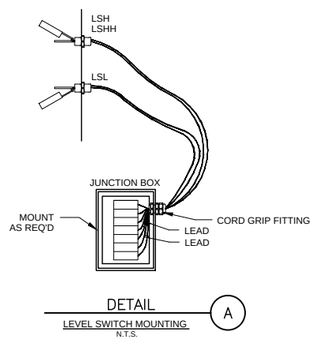

DETAIL A
LEVEL SWITCH MOUNTING
N.T.S.

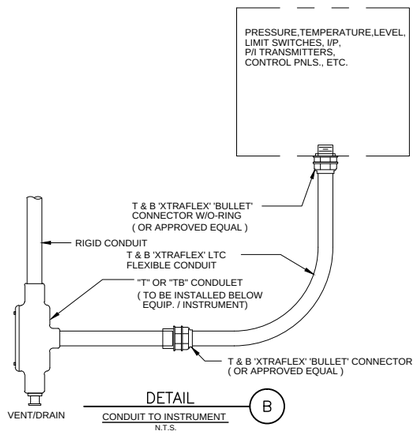

DETAIL B
CONDUIT TO INSTRUMENT
N.T.S.

CONESTOGA-ROVERS & ASSOCIATES

Source Reference:	
Project Manager: G. WALTERS	Reviewed By: J.MICHALOWSKI
Designed By: P. DIFRANCISCO	Drawn By: P. DIFRANCISCO
Scale: AS SHOWN	Project No: 19190-02
Report No: 044	Drawing No: EL-06
Date: JANUARY 2010	

RADIO MATERIALS CORPORATION
ATTICA, INDIANA

SVE AND AIR SPARGE TREATMENT SYSTEM

INSTRUMENTATION PLAN AND DETAILS

SCALE VERIFICATION
THIS BAR MEASURES 1" ON ORIGINAL. ADJUST SCALE ACCORDINGLY.

Approved

No	Revision	Date	Initial
A	REVIEW AND COMMENT	01/19/10	JWM

19190-02(044)EL-BU008 JAN 18/2010

Issued for Information only
NOT FOR CONSTRUCTION

EQUIPMENT BUILDING
PLC CONTROL PANEL

IPA 100.100.100.3
ETHERNET SWITCH

SIC-10 VFD
AB POWERFLEX 70
IPA 100.100.100.10

SIC-20 VFD
AB POWERFLEX 70
IPA 100.100.100.20

SIC-30 VFD
AB POWERFLEX 70
IPA 100.100.100.30

SIC-40 VFD
AB POWERFLEX 70
IPA 100.100.100.40

IPA 100.100.100.1
AB COMPACTLOGIX 1769-L32E
ATTICA_CPTXo2

VERBATIM
AUTO
DIALER

DF1 CABLE
SUPPLIED BY
AUTO DIALER VENDOR

TELEPHONE
CABLE

IPA 100.100.100.??

ETHERNET
CABLE

DESKTOP HMI
FACTORY TALK VIEW SE
PC ANYWHERE

TELEPHONE
CABLE

IP ADDRESS	100.100.100.XXX
SUBNET MASK	255.255.255.0
DEFAULT GATEWAY	NA

LEGEND

- - - - - INDICATES CAT 5e ETHERNET CABLE (UNLESS MARKED OTHERWISE)

——— INDICATES DF1 COMMUNICATION CABLE (UNLESS MARKED OTHERWISE)

CONESTOGA-ROVERS & ASSOCIATES

Source Reference:		Date:	JANUARY 2010
Project Manager: G. WALTERS	Reviewed By: J.MICHALOWSKI	Designed By: J. MICHALOWSKI	Drawn By: J. PAUTLER
Scale: NONE	Project No: 19190-02	Report No: 044	Drawing No: EL-07

19190-02(044)EL-BU009 JAN 15/2010

RADIO MATERIALS CORPORATION
ATTICA, INDIANA

SVE AND AIR SPARGE TREATMENT SYSTEM

NETWORK
ARCHITECTURE

SCALE VERIFICATION
THIS BAR MEASURES 1" ON ORIGINAL. ADJUST SCALE ACCORDINGLY.

Approved

No	Revision	Date	Initial
A	REVIEW AND COMMENT	01/19/10	WMC

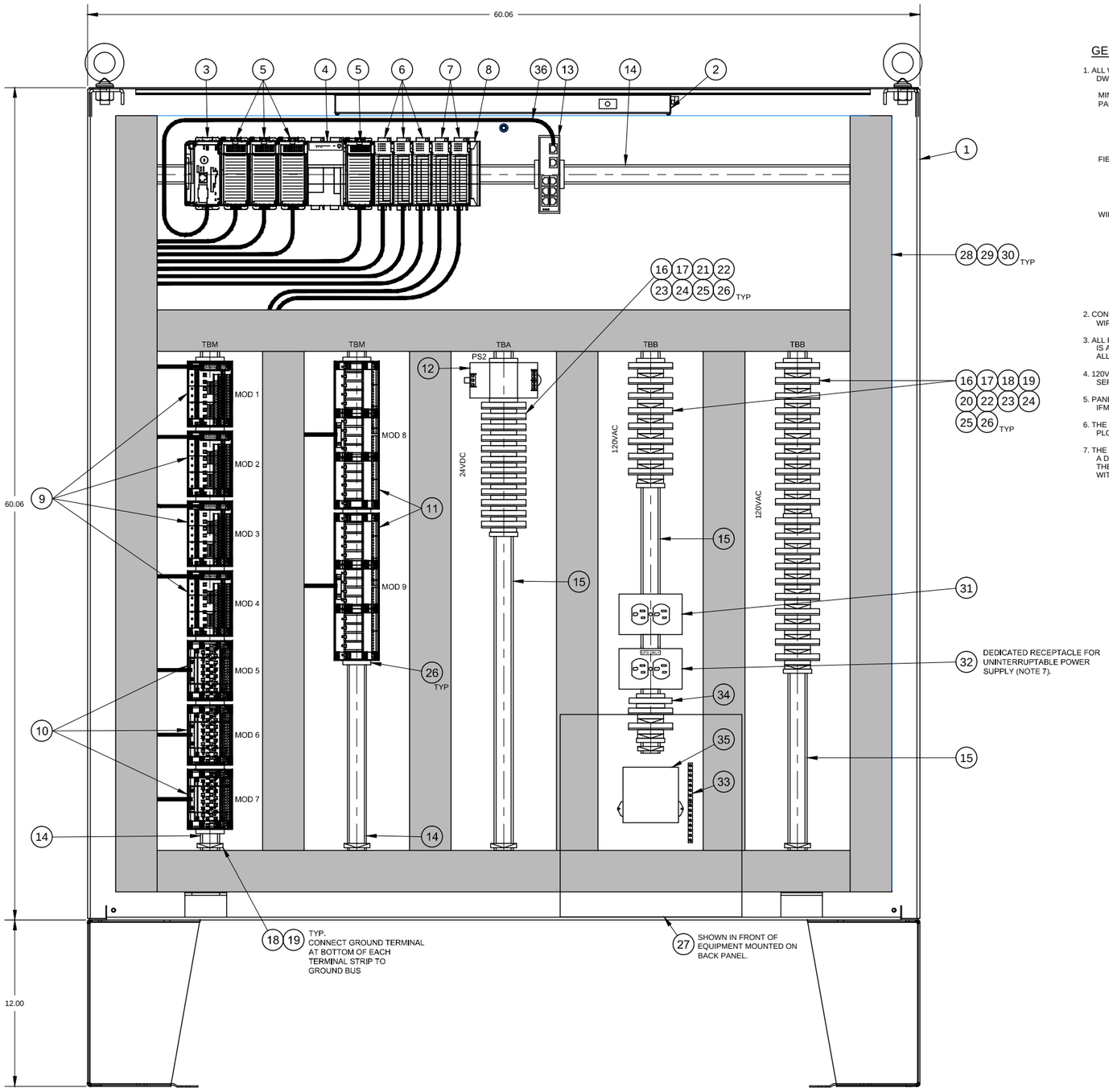

FRONT VIEW
WITH DOORS REMOVED

NAMEPLATE ENGRAVING

N1	EQUIPMENT BUILDING	4" x 1" WHITE SURFACE
	PLC CONTROL PANEL	3/16" HIGH BLACK LETTERING

GENERAL NOTES

1. ALL WIRING SHALL BE AS DIRECTED ON DWGS. AND AS FOLLOWS:

   MINIMUM WIRE SIZES (SIZE PER SCHEMATIC DIAGRAM)
   PANEL WIRING - TB TO PLC
   120VAC - #14 AWG MTW
   24VDC (POWER) - #18 AWG MTW
   24VDC (ANALOG) - 2/C#18 SHLD
   24VDC (DIGITAL) - 2/C#18 TW

   FIELD WIRING
   120VAC - #14 AWG MTW
   24VDC (POWER) - #16 AWG MTW
   24VDC (ANALOG) - 2/C#16 SHLD
   24VDC (DIGITAL) - 2/C#16 TW

   WIRE COLOR CODES

   120VAC - RED
   120VAC NEUTRAL - WHITE
   480VAC - BLACK
   24VDC (+) - BLUE
   24VDC (-) - LIGHT BLUE
   GROUND - GREEN
   24VDC ANALOG (+) - RED
   24VDC ANALOG (-) - BLACK
   EXTERNALLY POWERED AC CONTROL- YELLOW

2. CONNECTIONS SHALL BE MADE TO DEVICES PER SCHEMATIC WIRING DIAGRAMS

3. ALL PANEL EQUIPMENT SHALL BE INSTALLED SO THAT THERE IS ACCESS TO ALL NECESSARY COMPONENTS AND SO THAT ALL EQUIPMENT DOORS CAN OPEN 90Â

4. 120VAC WIRING AND 24VDC WIRING SHALL BE ROUTED IN SEPARATE WIRING DUCT.

5. PANEL FABRICATOR TO SUPPLY AND INSTALL ALL FUSING FOR IFM MODULES PER WIRING DIAGRAMS PLUS 10% SPARE.

6. THE IFM MODULES SHALL BE LABELLED PER WHICH PLC MODULE THAT THEY ARE CONNECTED TO.

7. THE UNINTERRUPTIBLE POWER SUPPLY SHALL BE FED FROM A DEDICATED 15A-120VAC POWER SOURCE, ALL EQUIPMENT IN THE CONTROL PANEL SHALL BE POWERED FROM THE UPS, WITH THE EXCEPTION OF THE CONTROL PANEL RECEPTACLE.

BILL OF MATERIAL

ITEM	NO.	DESCRIPTION
1	1	HOFFMAN NEMA 12 ENCLOSURE 60"H x 60"W x 10"D CAT. #A606010LP W/PANEL A60P60
2	1	HOFFMAN FLUORESCENT LIGHT FIXTURE CAT. #ALF16D24R
3	1	ALLEN-BRADLEY COMPACTLOGIX PROCESSOR CAT. #1769-L32E W/ COMPACT FLASH 1784-CF64
4	1	ALLEN-BRADLEY COMPACTLOGIX POWER SUPPLY CAT. #1769-PA4
5	4	ALLEN-BRADLEY COMPACTLOGIX ANALOG INPUT MODULE CAT. #1769-IF8
6	3	ALLEN-BRADLEY COMPACTLOGIX DIGITAL INPUT MODULE CAT. #1769-IQ16
7	2	ALLEN-BRADLEY COMPACTLOGIX 24VDC SOURCING OUTPUT MODULE CAT. #1769-OB16
8	1	ALLEN-BRADLEY COMPACTLOGIX RIGHT END CAP CAT. #1769-ECR
9	4	ALLEN-BRADLEY INTERFACE MODULE CAT. #1492-AIFM8-F-5 WITH CABLE #1492-ACAB025EB69 (FOR IF8 MODULE)
10	3	ALLEN-BRADLEY INTERFACE MODULE CAT. #1492-IFM20F-F24A-2 WITH CABLE #1492-CAB010B69 (FOR IO16 MODULE)
11	2	ALLEN-BRADLEY INTERFACE MODULE CAT. #1492-XIM2024-16R WITH CABLE #1492-CAB025EB9 (FOR OB16 MODULE)
12	1	SOLA HEVI-DUTY 24VDC POWER SUPPLY, 2.5A CAT. #SDN 5-24-100P
13	1	BRAD COMMUNICATIONS (WOODHEAD) ETHERNET SWITCH CAT. #DRL-380
14	8'-4"	ALLEN-BRADLEY DIN MOUNTING RAIL CAT. #199-DR1
15	9'-0"	ALLEN-BRADLEY DIN MOUNTING RAIL CAT. #1492-DR6
16	43	ALLEN-BRADLEY IEC FEED-THROUGH TERMINAL BLOCK CAT. #1492-J6
17	1	ALLEN-BRADLEY TERMINAL BLOCK END BARRIER CAT. #1492-EBJ3
18	36	ALLEN-BRADLEY GROUNDING TERMINAL BLOCK CAT. #1492-JG6
19	9	ALLEN-BRADLEY TERMINAL BLOCK END BARRIER CAT. #1492-EB10-Y
20	30	ALLEN-BRADLEY FUSE TERMINAL BLOCK, 120VAC (NEON) CAT. #1492-H4
21	12	ALLEN-BRADLEY FUSE TERMINAL BLOCK, 24VDC (RED LED) CAT. #1492-H5
22	42	ALLEN-BRADLEY FUSE TERMINAL END BARRIER CAT. #1492-N37
23	42	FUSE ELEMENTS - LITTLEFUSE OR EQUAL SEE SCHEMATIC DIAGRAMS FOR FUSE SIZE
24	2	ALLEN-BRADLEY TERMINAL GROUP MARKER CAT. #1492-GM35
25	2	ALLEN-BRADLEY TERMINAL MARKER (1-100) CAT. #1492-SM8X12H1-100
26	21	ALLEN-BRADLEY END ANCHOR CAT. #1492-EA35
27	1	APC UNTERRUPTIBLE POWER SUPPLY 1500VA 120VAC CAT. #BR1500
28	30'-0"	WIREWAY MODULAR WIRING DUCT COVER 3" CAT. #C37
29	30'-0"	WIREWAY MODULAR WIRING DUCT 3" BASE CAT. #B37
30	30'-0"	WIREWAY MODULAR WIRING DUCT SIDE 4" BASE CAT. #S47AB
31	1	HUBBELL DIN RAIL BOX W/GFR5252GYA GROUND FAULT RECEPTACLE CAT. #DRUBGF15
32	1	HUBBELL DIN RAIL BOX W/CR5252GY RECEPTACLE CAT. #DRUB15
33	2	SQUARE-D GROUND BAR KIT CAT. #PK0GTA6
34	1	ALLEN-BRADLEY RELAY W/ SOCKET, 120VAC COIL CAT. #700-HP32A1 W/ SOCKET #700-HN123
35	1	NORTHERN TECHNOLOGIES SURGE ARRESTER CAT. #TCS-HWR
36	AS REQ'D	ETHERNET CABLE -

Issued for information only
NOT FOR CONSTRUCTION

CONESTOGA-ROVERS & ASSOCIATES

Source Reference:

Project Manager: G. WALTERS
Reviewed By: J.MICHALOWSKI
Designed By: J. MICHALOWSKI
Drawn By: J. PAUTLET
Date: JANUARY 2010
Project No: 19190-02
Report No: 044
Scale: NONE
Drawing No: EL-08

19190-02(044)EL-BU010 FEB 04/2010

RADIO MATERIALS CORPORATION
ATTICA, INDIANA

SVE AND AIR SPARGE TREATMENT SYSTEM

PLC CONTROL PANEL ARRANGEMENT
AND BILL OF MATERIALS

SCALE VERIFICATION
THIS BAR MEASURES 1" ON ORIGINAL. ADJUST SCALE ACCORDINGLY.

Approved

No	Revision	Date	Initial
A	REVIEW AND COMMENT	01/19/10	JWM

Issued for information only
NOT FOR CONSTRUCTION

LEGEND

INDICATES EXTERNAL TO CONTROL PANEL WIRING

INDICATES PLC WIRING

NOTES

1. REFER TO DRAWING EL-08 FOR WIRE SIZE AND COLOR CODE.

CONESTOGA-ROVERS & ASSOCIATES

Source Reference:

Project Manager: G. WALTERS

Reviewed By: J.MICHALOWSKI

Designed By: J. MICHALOWSKI

Drawn By: J. PAUTLER

Date: JANUARY 2010

Scale: NONE

Project No: 19190-02

Report No: 044

Drawing No: EL-09 SHT. 1

19190-02(044)EL-BU011 FEB 04/2010

RADIO MATERIALS CORPORATION
ATTICA, INDIANA

SVE AND AIR SPARGE TREATMENT SYSTEM

PLC CONTROL PANEL
120 VAC POWER DISTRIBUTION DIAGRAM

SCALE VERIFICATION

THIS BAR MEASURES 1" ON ORIGINAL. ADJUST SCALE ACCORDINGLY.

Approved

No	Revision	Date	Initial
A	REVIEW AND COMMENT	01/19/10	JWM

PLC TO AUTO DIALER WIRING
(PURCHASED FROM AUTODIALER VENDOR)

Issued for information only
NOT FOR CONSTRUCTION

LEGEND

– – – – – INDICATES EXTERNAL TO CONTROL PANEL WIRING
——— INDICATES PLC WIRING

NOTES

1. REFER TO DRAWING EL-08 FOR WIRE SIZE AND COLOR CODE.

CONESTOGA-ROVERS & ASSOCIATES

Source Reference:

Date: JANUARY 2010
Drawn By: J. PAUTLER
Designed By: J. MECHALOWSKI
Reviewed By: J.MICHALOWSKI
Project Manager: G. WALTERS
Project No: 19190-02
Report No: 044
Scale: NONE
Drawing No: EL-09 SHT. 2

19190-02(044)EL-BU021 FEB 04/2010

RADIO MATERIALS CORPORATION
ATTICA, INDIANA

SVE AND AIR SPARGE TREATMENT SYSTEM

PLC CONTROL PANEL
24VDC POWER DISTRIBUTION DIAGRAM

SCALE VERIFICATION
THIS BAR MEASURES 1" ON ORIGINAL. ADJUST SCALE ACCORDINGLY.

Approved

No	Revision	Date	Initial
A	REVIEW AND COMMENT	01/19/10	JWM

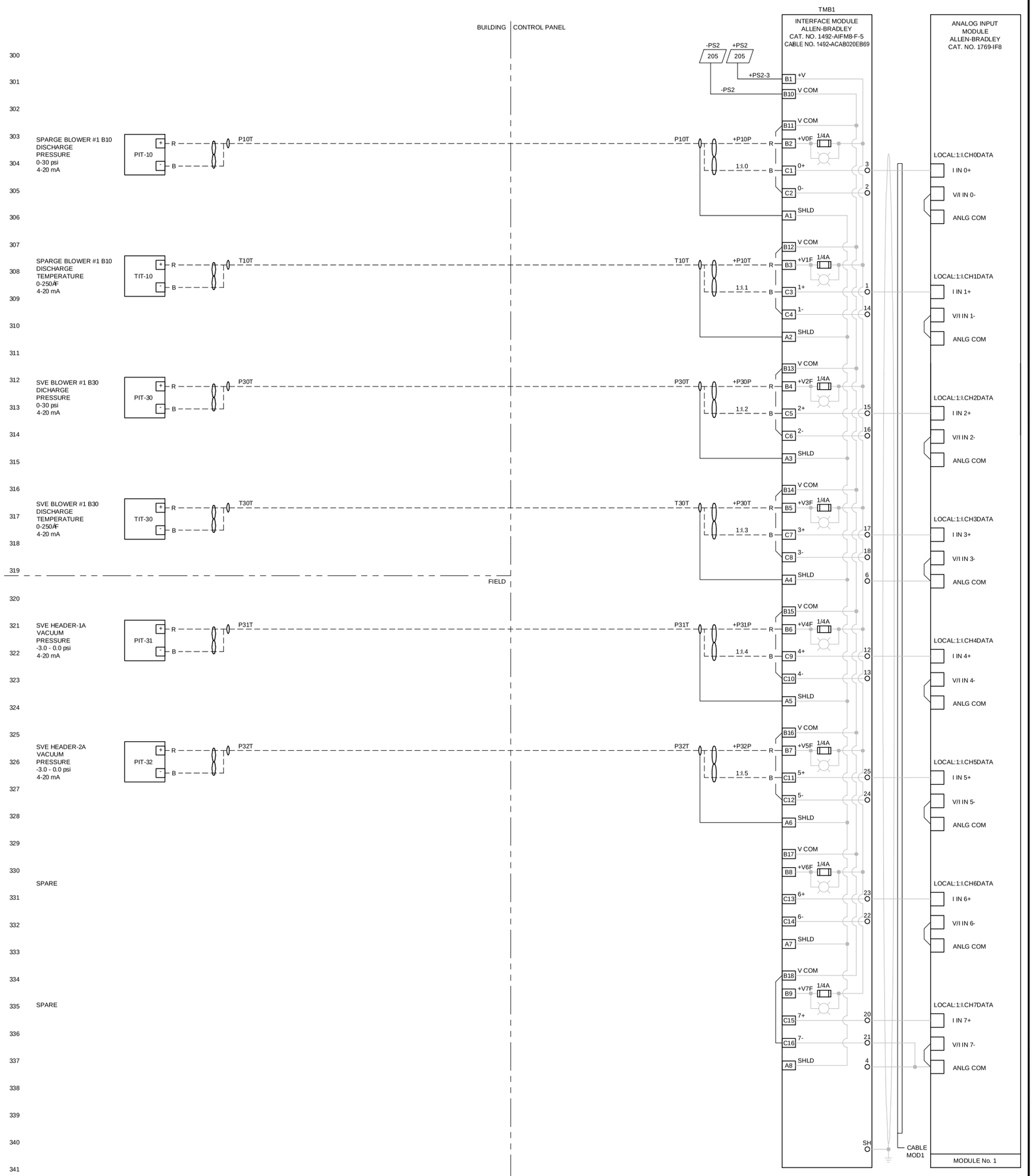

Issued for information only
NOT FOR CONSTRUCTION

No	Revision	Date	Initial
A	REVIEW AND COMMENT	01/19/10	JWM

SCALE VERIFICATION

THIS BAR MEASURES 1" ON ORIGINAL. ADJUST SCALE ACCORDINGLY.

Approved

RADIO MATERIALS CORPORATION
ATTICA, INDIANA

SVE AND AIR SPARGE TREATMENT SYSTEM

PLC CONTROL PANEL
ANALOG INPUT WIRING DIAGRAM

CONESTOGA-ROVERS & ASSOCIATES

Source Reference:			Date: JANUARY 2010
Project Manager: G. WALTERS	Reviewed By: J.MICHALOWSKI	Designed By: J. MICHALOWSKI	Drawn By: J. PAUTLER
Scale: NONE	Project No: 19190-02	Report No: 044	Drawing No: EL-09 SHT. 3

19190-02(044)EL-BU012 JAN 15/2010

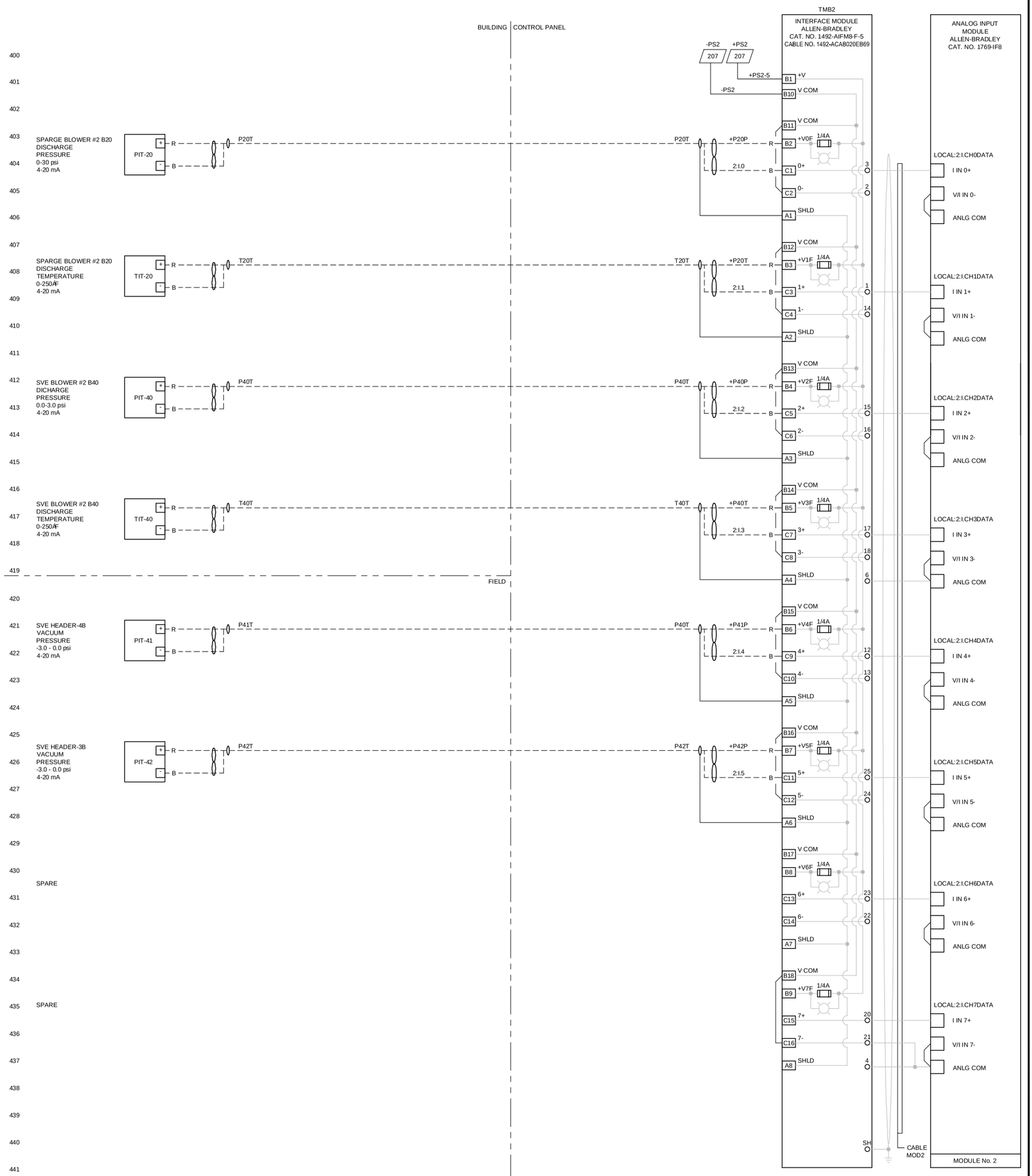

Issued for information only
NOT FOR CONSTRUCTION

No	Revision	Date	Initial
A	REVIEW AND COMMENT	01/19/10	JWM

SCALE VERIFICATION

THIS BAR MEASURES 1" ON ORIGINAL. ADJUST SCALE ACCORDINGLY.

Approved

RADIO MATERIALS CORPORATION
ATTICA, INDIANA

SVE AND AIR SPARGE TREATMENT SYSTEM

PLC CONTROL PANEL
ANALOG INPUT WIRING DIAGRAM

CONESTOGA-ROVERS & ASSOCIATES

Source Reference:			Date: JANUARY 2010
Project Manager: G. WALTERS	Reviewed By: J.MICHALOWSKI	Designed By: J. MICHALOWSKI	Drawn By: J. PAUTLER
Scale: NONE	Project No: 19190-02	Report No: 044	Drawing No: EL-09 SHT. 4

19190-02(044)EL-BU013 JAN 18/2010

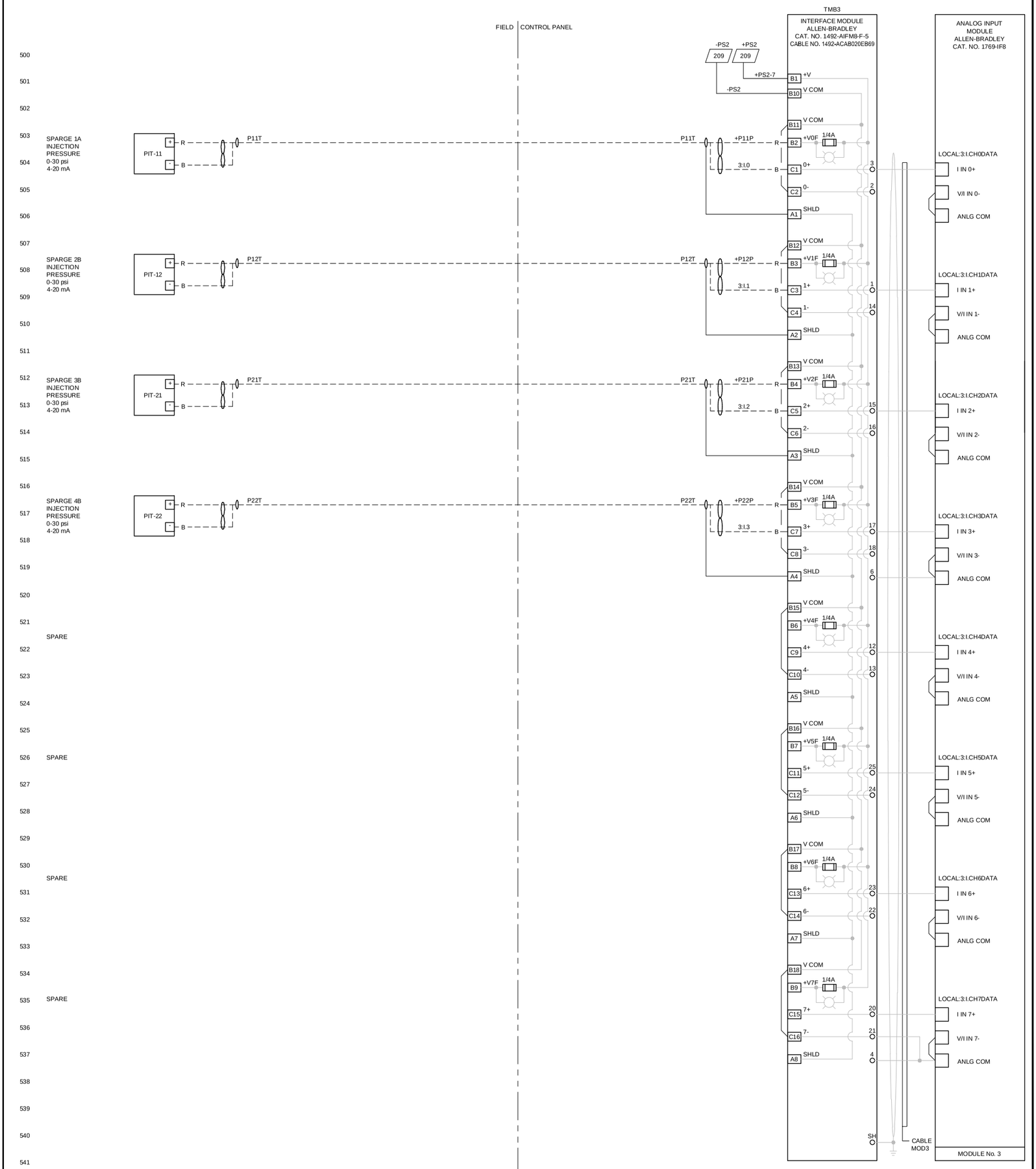

Issued for information only
NOT FOR CONSTRUCTION

No	Revision	Date	Initial
A	REVIEW AND COMMENT	01/19/10	JWM

SCALE VERIFICATION

THIS BAR MEASURES 1" ON ORIGINAL. ADJUST SCALE ACCORDINGLY.

Approved

RADIO MATERIALS CORPORATION
ATTICA, INDIANA

SVE AND AIR SPARGE TREATMENT SYSTEM

PLC CONTROL PANEL
ANALOG INPUT WIRING DIAGRAM

CONESTOGA-ROVERS & ASSOCIATES

Source Reference:			Date: JANUARY 2010
Project Manager: G. WALTERS	Reviewed By: J.MICHALOWSKI	Designed By: J. MICHALOWSKI	Drawn By: J. PAUTLER
Scale: NONE	Project No: 19190-02	Report No: 044	Drawing No: EL-09 SHT. 5

19190-02(044)EL-BU014 FEB 04/2010

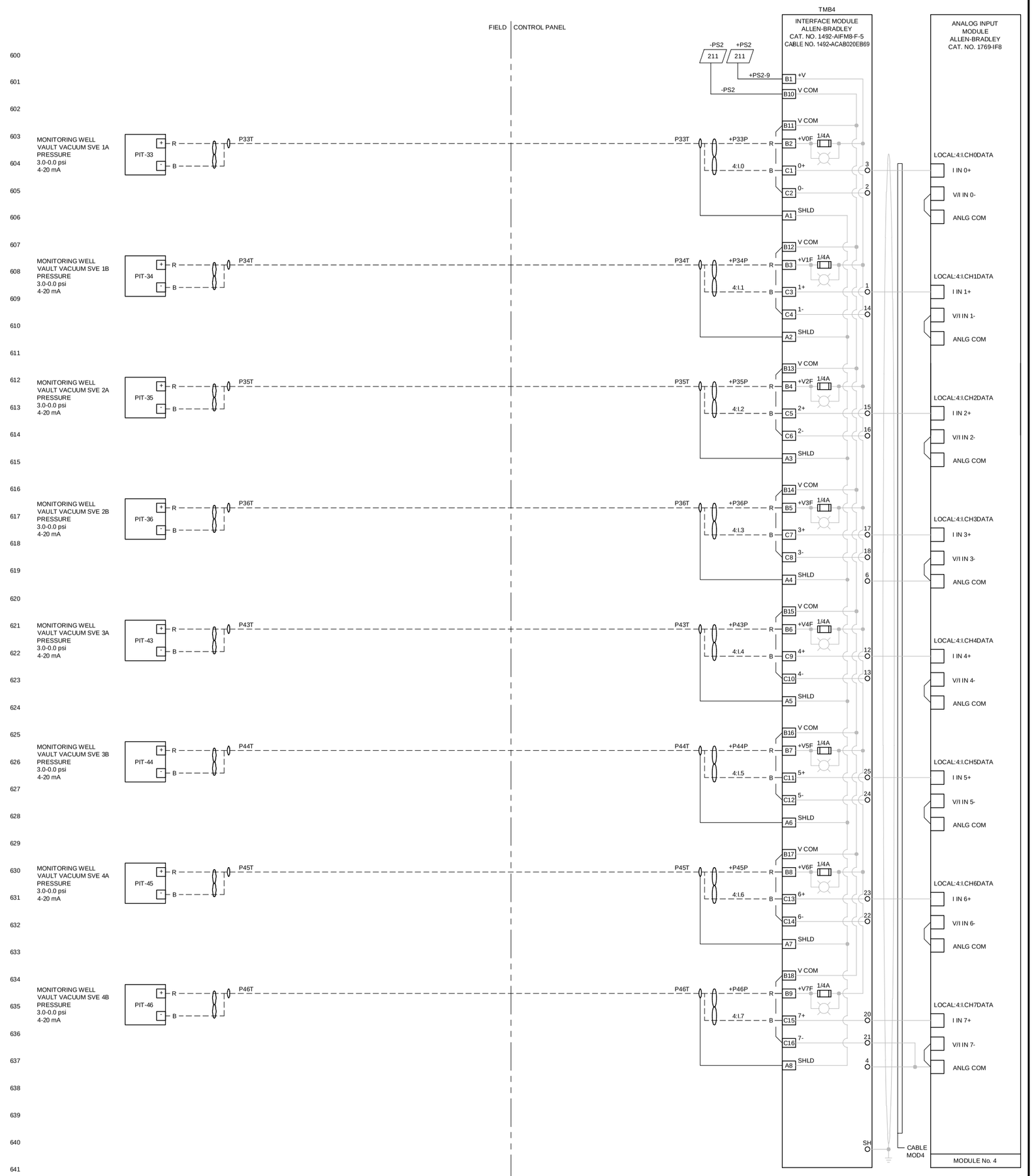

Issued for information only
NOT FOR CONSTRUCTION

No	Revision	Date	Initial
A	REVIEW AND COMMENT	01/19/10	JWM

SCALE VERIFICATION

THIS BAR MEASURES 1" ON ORIGINAL. ADJUST SCALE ACCORDINGLY.

Approved

RADIO MATERIALS CORPORATION
ATTICA, INDIANA

SVE AND AIR SPARGE TREATMENT SYSTEM

PLC CONTROL PANEL
ANALOG INPUT WIRING DIAGRAM

CONESTOGA-ROVERS & ASSOCIATES

Source Reference:			Date: JANUARY 2010
Project Manager: G. WALTERS	Reviewed By: J. MICHALOWSKI	Designed By: J. MICHALOWSKI	Drawn By: J. PAUTLER
Scale: NONE	Project No: 19190-02	Report No: 044	Drawing No: EL-09 SHT. 6

19190-02(044)EL-BU023 FEB 04/2010

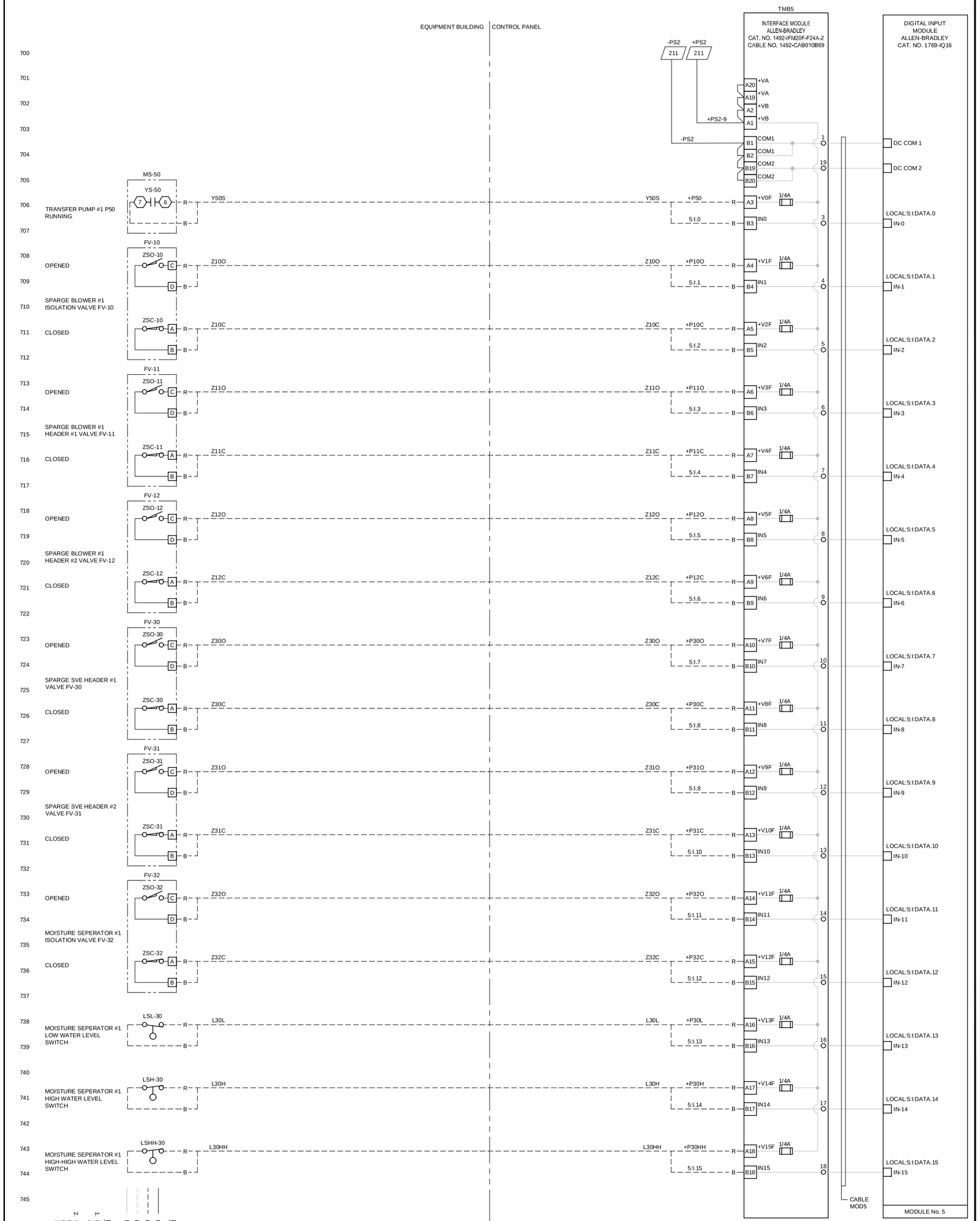

Issued for information only
NOT FOR CONSTRUCTION

No	Revision	Date	Initial
A	REVIEW AND COMMENT	01/19/10	JWM

SCALE VERIFICATION

THIS BAR MEASURES 1" ON ORIGINAL. ADJUST SCALE ACCORDINGLY.

Approved

RADIO MATERIALS CORPORATION
ATTICA, INDIANA

SVE AND AIR SPARGE TREATMENT SYSTEM

PLC CONTROL PANEL
DIGITAL INPUT WIRING DIAGRAM

CONESTOGA-ROVERS & ASSOCIATES

Source Reference:			Date: JANUARY 2010
Project Manager: G. WALTERS	Reviewed By: J.MICHALOWSKI	Designed By: J. MICHALOWSKI	Drawn By: J. PAUTLER
Scale: NONE	Project No: 19190-02	Report No: 044	Drawing No: EL-09 SHT. 7

19190-02(044)EL-BU015 JAN 15/2010

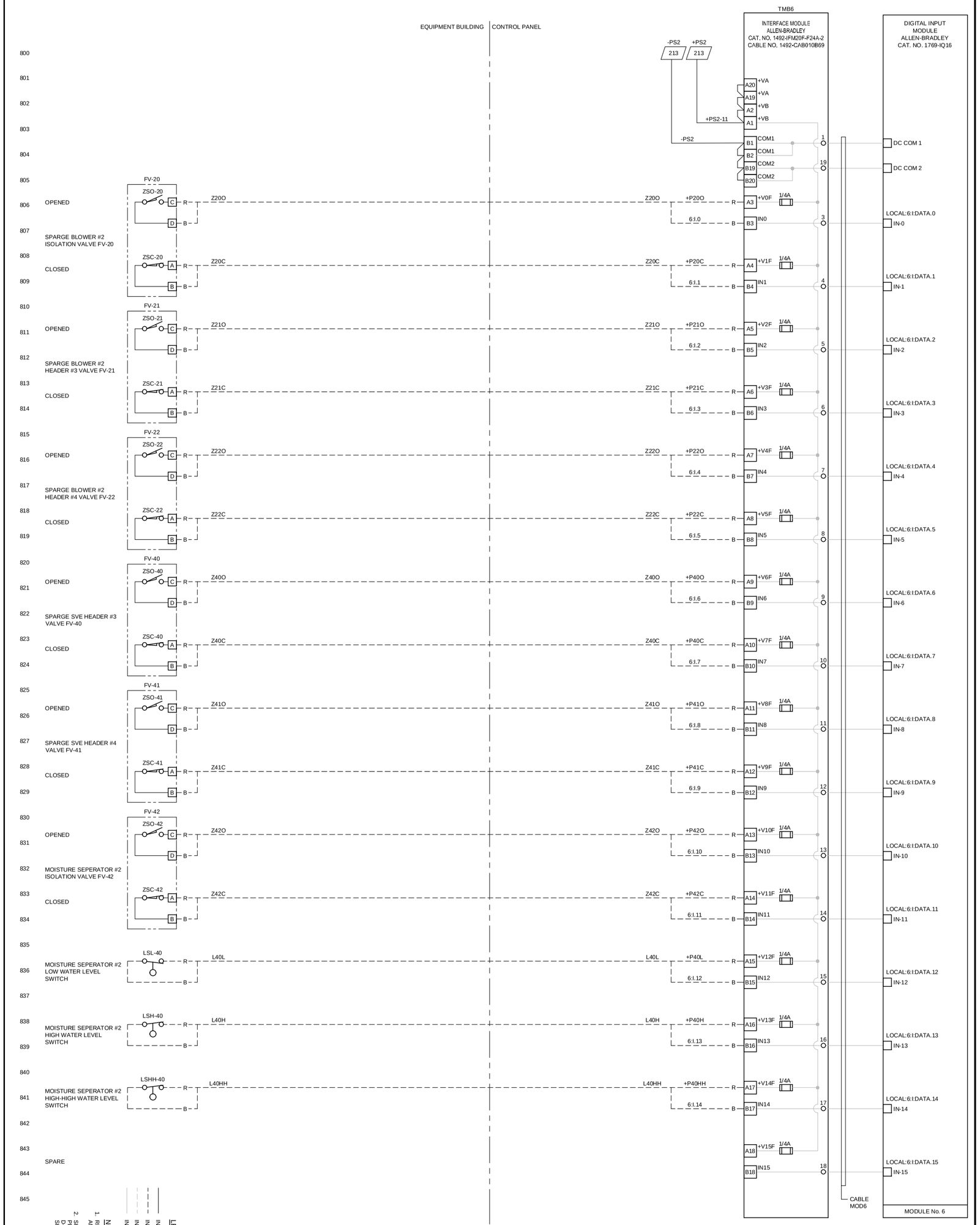

Issued for information only
NOT FOR CONSTRUCTION

No	Revision	Date	Initial
A	REVIEW AND COMMENT	01/19/10	JWM

SCALE VERIFICATION

THIS BAR MEASURES 1" ON ORIGINAL. ADJUST SCALE ACCORDINGLY.

Approved

RADIO MATERIALS CORPORATION
ATTICA, INDIANA

SVE AND AIR SPARGE TREATMENT SYSTEM

PLC CONTROL PANEL
DIGITAL INPUT WIRING DIAGRAM

CONESTOGA-ROVERS & ASSOCIATES

Source Reference:			Date: JANUARY 2010
Project Manager: G. WALTERS	Reviewed By: J.MICHALOWSKI	Designed By: J. MICHALOWSKI	Drawn By: J. PAUTLER
Scale: NONE	Project No: 19190-02	Report No: 044	Drawing No: EL-09 SHT. 8

19190-02(044)EL-BU016 JAN 15/2010

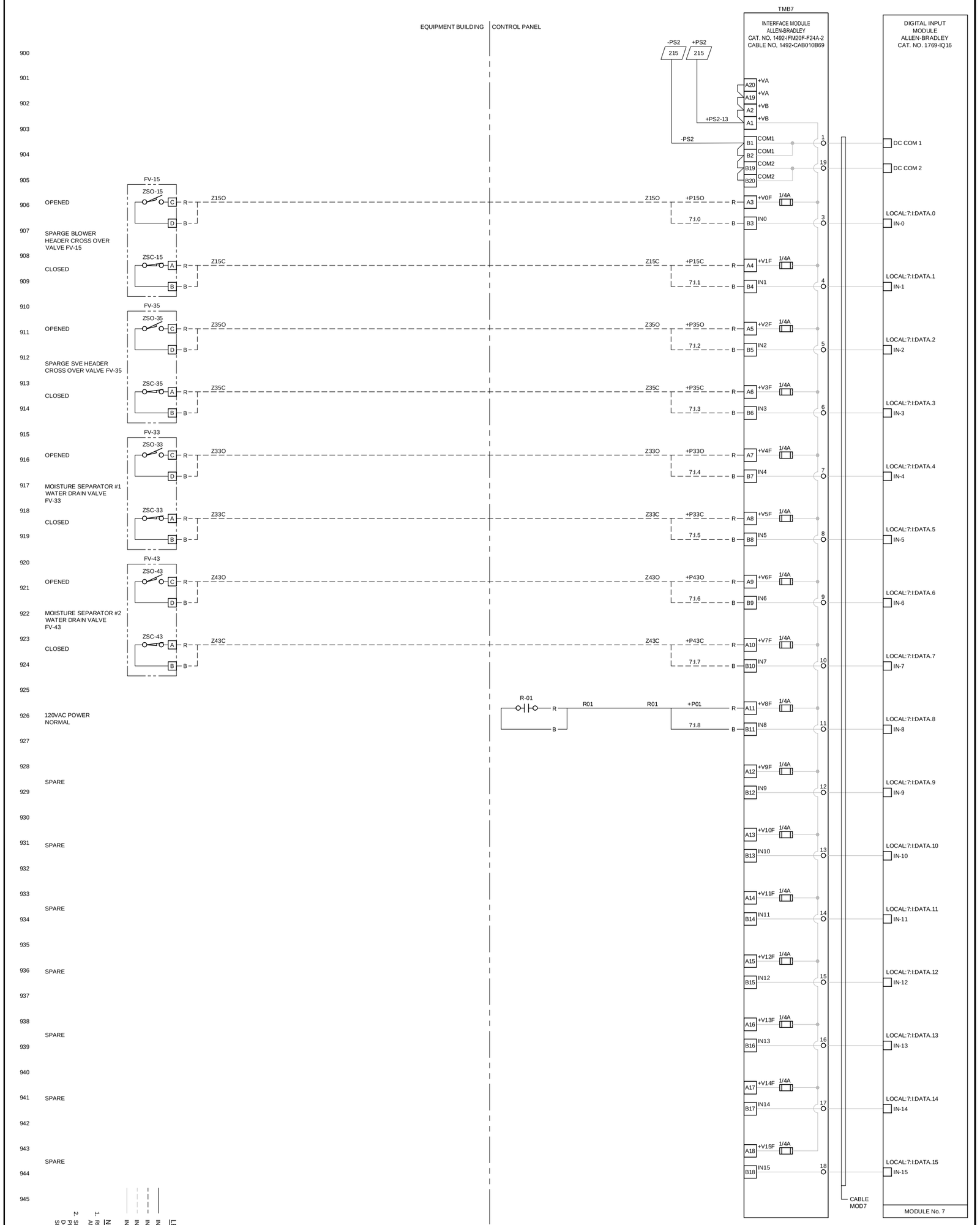

LEGEND

- INDICATES PANEL WIRING
- INDICATES FIELD WIRING
- INDICATES EXISTING WIRING
- INDICATES VENDOR WIRING

NOTES

1. REFER TO DRAWING EL-08 FOR WIRE SIZE AND COLOR CODE.
2. SHIELD TERMINALS ARE CONNECTED TO PRE-WIRED CABLE SHIELD THROUGH DRAIN WIRE. DRAIN WIRE SHIELD TO CHASSIS GROUND CABLE

Issued for information only
NOT FOR CONSTRUCTION

No	Revision	Date	Initial
A	REVIEW AND COMMENT	01/19/10	JWM

SCALE VERIFICATION

THIS BAR MEASURES 1" ON ORIGINAL. ADJUST SCALE ACCORDINGLY.

Approved

RADIO MATERIALS CORPORATION
ATTICA, INDIANA

SVE AND AIR SPARGE TREATMENT SYSTEM

PLC CONTROL PANEL
DIGITAL INPUT WIRING DIAGRAM

CONESTOGA-ROVERS & ASSOCIATES

Source Reference:			Date: JANUARY 2010
Project Manager: G. WALTERS	Reviewed By: J.MICHALOWSKI	Designed By: J. MICHALOWSKI	Drawn By: J. PAUTLER
Scale: NONE	Project No: 19190-02	Report No: 044	Drawing No: EL-09 SHT. 9

19190-02(044)EL-BU017 JAN 15/2010

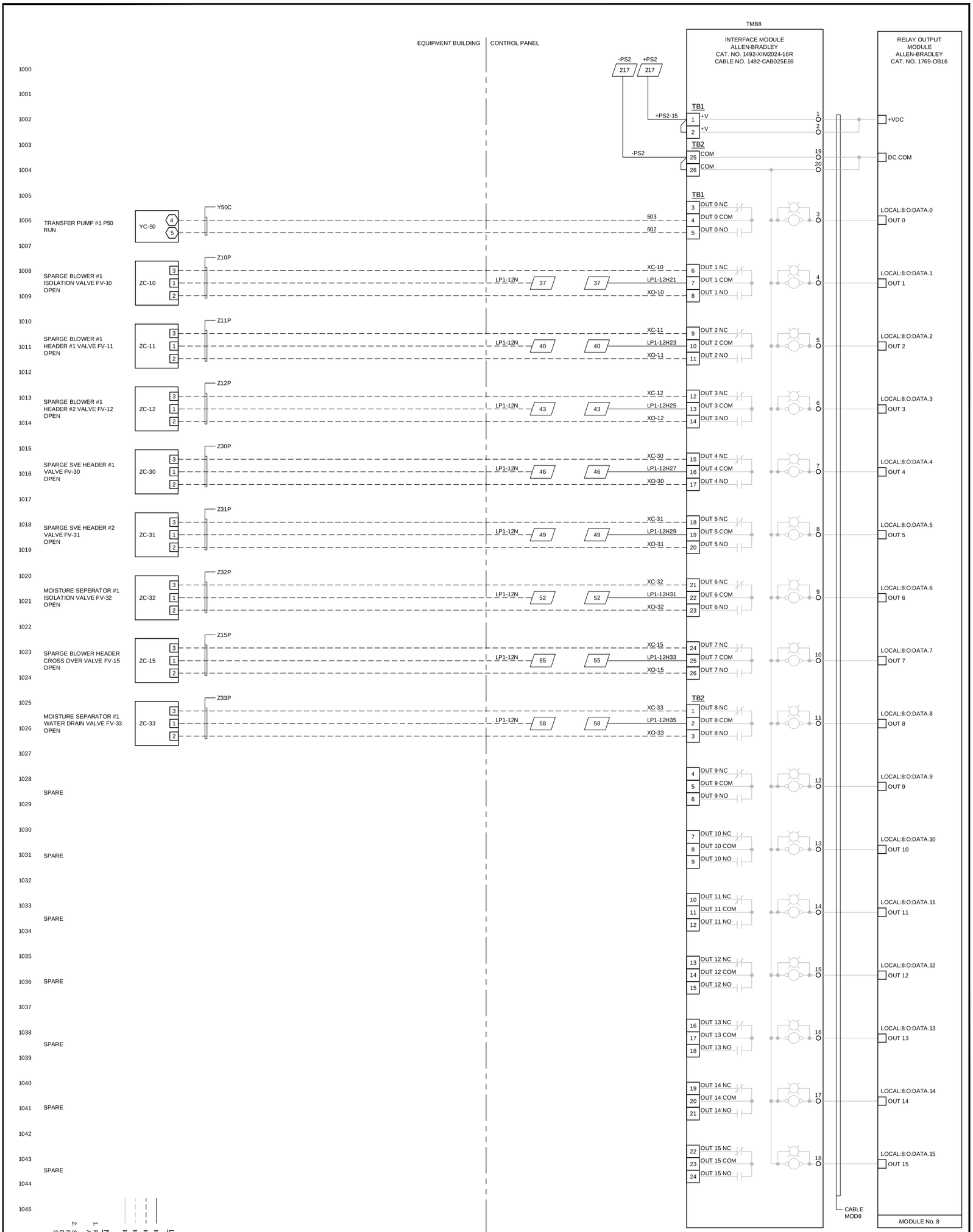

Issued for information only
NOT FOR CONSTRUCTION

No	Revision	Date	Intial
A	REVIEW AND COMMENT	01/19/10	JWM

SCALE VERIFICATION

THIS BAR MEASURES 1" ON ORIGINAL. ADJUST SCALE ACCORDINGLY.

Approved

RADIO MATERIALS CORPORATION
ATTICA, INDIANA

SVE AND AIR SPARGE TREATMENT SYSTEM

PLC CONTROL PANEL
DIGITAL OUTPUT WIRING DIAGRAM

CONESTOGA-ROVERS & ASSOCIATES

Source Reference:			Date: JANUARY 2010
Project Manager: G. WALTERS	Reviewed By: J.MICHALOWSKI	Designed By: J. MICHALOWSKI	Drawn By: J. PAUTLER
Scale: NONE	Project No: 19190-02	Report No: 044	Drawing No: EL-09 SHT. 10

19190-02(044)EL-BU018 JAN 18/2010

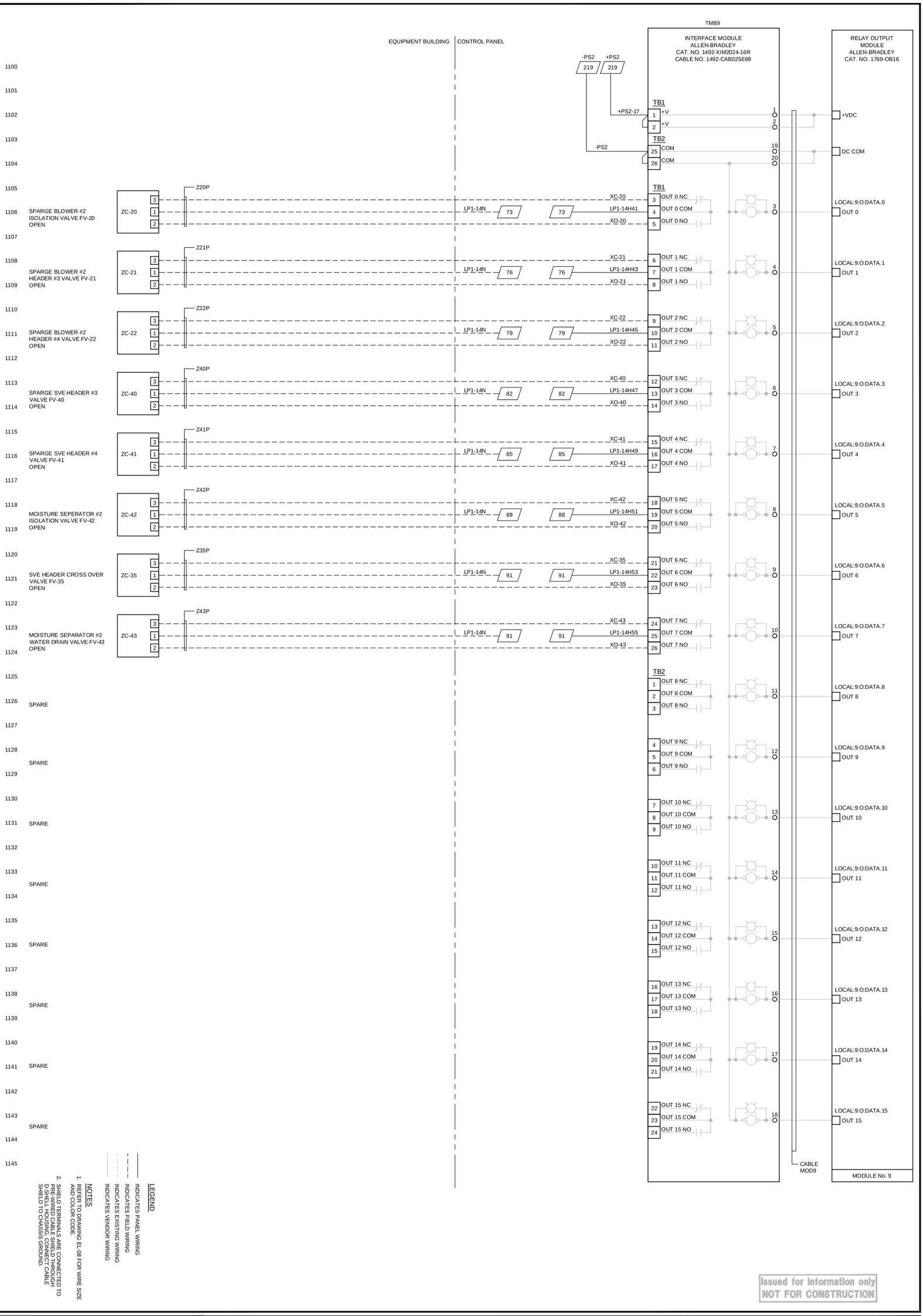

Issued for information only
NOT FOR CONSTRUCTION

No	Revision	Date	Initial
A	REVIEW AND COMMENT	01/19/10	JWM

SCALE VERIFICATION

THIS BAR MEASURES 1" ON ORIGINAL. ADJUST SCALE ACCORDINGLY.

Approved

RADIO MATERIALS CORPORATION
ATTICA, INDIANA

SVE AND AIR SPARGE TREATMENT SYSTEM

PLC CONTROL PANEL
DIGITAL OUTPUT WIRING DIAGRAM

CONESTOGA-ROVERS & ASSOCIATES

Source Reference:			Date: JANUARY 2010
Project Manager: G. WALTERS	Reviewed By: J.MICHALOWSKI	Designed By: J. MICHALOWSKI	Drawn By: J. PAUTLER
Scale: NONE	Project No: 19190-02	Report No: 044	Drawing No: EL-09 SHT. 11

19190-02(044)EL-BU019 JAN 18/2010

TABLE OF CONTENTS

PROJECT SPECIFICATIONS

DIVISION 1 – ADMINISTRATIVE

01400 QUALITY REQUIREMENTS
01610 TRANSPORTATION AND HANDLING
01620 STORAGE OF MATERIAL
01630 SUBSTITUTIONS
01650 FIELD TESTS OF EQUIPMENT
01660 STARTING OF SYSTEMS
01700 EXECUTION REQUIREMENTS
01800 FACILITY OPERATIONS

DIVISION 2 – SITE CONSTRUCTION

02221 TRENCHING, BACKFILLING, AND COMPACTING
02315 EXCAVATION

DIVISION 3 – CONCRETE

03300 CAST-IN-PLACE CONCRETE

DIVISION 5 – METALS

05120 STRUCTURAL STEEL

DIVISION 9 – FINISHES

09900 PAINTS AND COATINGS

DIVISION 11 – EQUIPMENT

11305 PROCESS EQUIPMENT
11376 BLOWERS

DIVISION 13 – SPECIAL CONSTRUCTION

13121 PRE-ENGINEERED BUILDING INSTALLATION

DIVISION 16 – ELECTRICAL

16075 ELECTRICAL IDENTIFICATION
16120 WIRE AND CABLE
16140 WIRING DEVICES
16265 480VAC VARIABLE FREQUENCY DRIVES
16680 SURGE PROTECTION

DIVISION 17 – INSTRUMENTATION

17420 INSTRUMENTS
17431 CONTROL PANELS
17451 PROGRAMMABLE CONTROLLERS

SECTION 01400

QUALITY REQUIREMENTS

1.1 SECTION INCLUDES

A. Quality control.

B. Tolerances.

C. References.

D. Inspecting and testing services.

E. Manufacturers' field services and reports.

F. Measurement and payment.

1.2 QUALITY CONTROL

A. Monitor quality control over Suppliers, products, services, the Site conditions, and workmanship, to produce Works of specified quality.

B. Comply with manufacturers' instructions, including each step in sequence.

C. Should manufacturers' instructions conflict with the contract documents, we request clarification from ENGINEER before proceeding.

D. Comply with specified standards as minimum quality for the Works except where more stringent tolerances, codes, or specified requirements indicate higher standards or more precise workmanship.

E. Perform work by persons qualified to produce workmanship of specified quality. Use persons licensed to perform the Works where required by these Specifications or Laws and Regulations.

F. Secure products in place with positive anchorage devices designed and sized to withstand stresses, vibration, physical distortion, or disfigurement.

G. Materials furnished and finished or intermediate stages of the Works shall be sampled, tested, and inspected as specified in individual Sections and as required by reference standards.

1.3 TOLERANCES

A. Monitor tolerance control of installed products to produce acceptable Works. Do not permit tolerances to accumulate.

B. Comply with manufacturers' tolerances. Should manufacturers' tolerances conflict with the contract documents, request clarification from ENGINEER before proceeding.

C. Adjust products to appropriate dimensions; position before securing products in place.

1.4 REFERENCES

A. For products or workmanship specified by association, trade, or other consensus standards, comply with requirements of the standard, except when more rigid requirements are specified or are required by applicable Laws and Regulations.

B. Specific provisions of Laws or Regulations may be referenced in the Project Specifications to assist CONTRACTOR and identify options selected by ENGINEER. Such references do not relieve CONTRACTOR from compliance with other applicable provisions of Laws or Regulations not specifically referenced.

C. No inference or provision of any reference document including but not limited to any standard specification, manual, or code shall be effective to change the relationships, duties, and responsibilities of OWNER, CONTRACTOR, or ENGINEER from those set forth in the contract documents, nor shall it be effective to assign to OWNER or ENGINEER any duty or authority to supervise or direct the furnishing or performance of the Works or any duty or authority to undertake responsibility inconsistent with the provisions of the contract.

D. Publications referred to in these Specifications form part of the Specifications to the extent specified in individual Sections.

E. In case of conflict or discrepancy between a reference standard and the Project Specifications or with another reference standard, the more stringent requirements shall apply.

F. Should specified reference standards conflict with the contract documents, we request clarification from ENGINEER before proceeding.

1.5 INSPECTING AND TESTING SERVICES

A. OWNER shall employ and pay for services of an independent inspecting company and testing laboratory to perform inspecting and testing services as specified in individual Sections.

B. CONTRACTOR Responsibilities:

1. Deliver to inspecting company and testing laboratory at designated location, adequate samples of materials proposed to be used which require testing, along with proposed mix designs for concrete, and other material mixes that require testing by inspecting and testing laboratory.

2. Cooperate with personnel of independent inspecting company and testing laboratory, and provide safe access to the Works and to manufacturer's operations.

3. Provide incidental labor and facilities:

1. To provide access to the Works to be tested.

2. To obtain and handle samples at the Site or at source of products to be tested.

3. To facilitate tests and inspections.

4. For inspecting company and testing laboratory's exclusive use for storage and curing of test samples.

5. Forms for preparing concrete test beams and cylinders.

4. Notify ENGINEER and inspecting company and testing laboratory 24 hours prior to expected time for operations requiring inspecting and testing services to allow for assignment of personnel and scheduling of tests.

5. Furnish copies of product test reports.

6. Promptly notify ENGINEER of all observed irregularities or non-conformance of the Works.

7. Retesting required because of CONTRACTOR negligence or non-conformance to specified requirements shall be performed by the same inspecting and testing laboratory on instructions by ENGINEER at CONTRACTOR's expense and at no additional cost to OWNER.

8. If defects or deficiencies are revealed during testing or inspecting, correct such defects and deficiencies and retest affected portions of the Works.

1.6 MANUFACTURERS' FIELD SERVICES AND REPORTS

A. When specified in individual Sections, require Suppliers to provide qualified staff personnel to observe Site conditions, conditions of surfaces and installation, quality of workmanship, perform startup of equipment, test, adjust, and balance of equipment and certify operation as applicable, and to initiate instructions when necessary.

B. Submit qualifications of observer to ENGINEER 30 days in advance of required observations. Observer subject to approval of OWNER.

C. Report observations and Site decisions or instructions given to applicators or installers that are supplemental or contrary to manufacturers' written instructions.

D. Submit report within 14 days of observation to ENGINEER for information.

END OF SECTION

SECTION 01610

TRANSPORTATION AND HANDLING OF MATERIALS AND EQUIPMENT

PART 1 GENERAL

1.01 SECTION INCLUDES

A. The CONTRACTORS responsibilities relative to the transportation and handling of materials and equipment.

1.02 RELATED SECTIONS

A. Section 01620 – Storage of Materials.

1.03 TRANSPORTATION AND HANDLING

A. The CONTRACTOR shall make all arrangements for transportation, delivery and handling of equipment and materials required for prosecution and completion of the Work.

B. Shipments of materials to CONTRACTOR or Subcontractors shall be delivered to the site only during regular working hours. Shipments shall be addressed and consigned to the CONTRACTOR giving name of Project, street number and city. Shipments shall not be delivered to OWNER except where otherwise directed.

C. If necessary to move stored materials and equipment during construction, CONTRACTOR shall move or cause to be moved materials and equipment without any additional compensation.

1.04 DELIVERY

A. Arrange deliveries of products in accordance with construction schedules and in ample time to facilitate inspection prior to installation.

B. Coordinate deliveries to avoid conflict with Work and conditions at site and to accommodate the following:

1. Work of other CONTRACTORS or OWNER.

2. Limitations of storage space.

3. Availability of equipment and personnel for handling products.

4. OWNER'S use of premises.

C. Do not have products delivered to project site until related Shop Drawings have been approved by the ENGINEER.

D. Do not have products delivered to site until required storage facilities have been provided.

E. Have products delivered to site in manufacturer's original, unopened, labeled containers. Keep ENGINEER informed of delivery of all equipment to be incorporated in the Work.

F. Partial deliveries of component parts of equipment shall be clearly marked to identify the equipment, to permit easy accumulation of parts and to facilitate assembly.

G. Immediately upon delivery. inspect shipment to assure:

1. Product complies with requirements of Contract Documents and reviewed submittals.

2. Quantities are correct.

3. Containers and packages are intact; labels are legible.

4. Products are properly protected and undamaged.

1.05 PRODUCT HANDLING

A. Provide equipment and personnel necessary to handle products, including those purchased by OWNER, by methods to prevent soiling or damage to products or packaging.

B. Provide additional protection during handling as necessary to prevent scraping, marring, or otherwise damaging products or surrounding surfaces.

C. Handle products by methods to prevent bending or overstressing.

D. Lift heavy components only at designated lifting points.

E. Materials and equipment shall at all times be handled in a safe manner and as recommended by manufacturer or supplier so that no damage will occur to them. Do not drop, roll, or skid products off delivery vehicles. Hand carry or use suitable materials handling equipment.

PART 2 PRODUCTS - NOT USED

PART 3 EXECUTION - NOT USED

END OF SECTION

SECTION 01620

STORAGE OF MATERIAL

PART 1 GENERAL

1.01 SECTION INCLUDES

A. The definition of the minimum requirements of the storage of material, by material type and protection required.

1.02 RELATED SECTIONS

A. Section 01610 – Transportation and Handling of Materials and Equipment.

1.03 STORAGE OF MATERIAL

A. Store and protect materials in accordance with recommendations of the manufacturer and requirements of Specifications.

B. CONTRACTOR shall make all arrangements and provisions necessary for the storage of materials and equipment.

C. All excavated materials, construction equipment, and materials and equipment to be incorporated into the Work shall be placed so as not to injure any part of the Work or existing facilities and so that free access can be had at all times to all parts of the Work and to all public utility installations in the vicinity of the Work.

D. Materials and equipment shall be kept neatly and compactly stored in locations that will cause a minimum of inconvenience to other contractors, public travel, adjoining OWNERS, tenants, and occupants. Arrange storage in a manner to provide easy access for inspection.

E. Areas available on the construction site for storage of material and equipment shall be as shown or approved by the ENGINEER.

F. Materials and equipment which are to become the property of the OWNER shall be stored to facilitate their inspection and insure preservation of the quality and fitness of the Work, including proper protection against damage by freezing and moisture. They shall be placed inside storage areas unless otherwise acceptable to OWNER.

G. Lawns, grass plots, or other private property shall not be used for storage purposes without written permission of the OWNER or other person in possession or control of such premises.

H. CONTRACTOR shall be fully responsible for loss or damage to stored materials and equipment.

I. Do not open containers of the manufacturer until time of installation unless recommended by the manufacturer or otherwise specified.

J. Do not store products in the structures being constructed unless approved in writing by the ENGINEER.

1.02 UNCOVERED STORAGE

A. The following types of materials may be stored out-of-doors without cover:

1. Reinforcing steel.

2. Precast concrete items.

3. Masonry block and brick.

4. Castings.

5. Manholes and exterior buried pipe.

B. Store the above materials on wood blocking so there is no contact with the ground.

1.03 COVERED STORAGE

A. The following types of materials may be stored out-of-doors if covered with material impervious to water:

1. Rough lumber.

2. Piping.

B. Tie down covers with rope and slope to prevent accumulation of water on covers.

C. Store materials on wood blocking.

1.04 FULLY PROTECTED STORAGE

A. Store all products not named above in buildings or trailers which have a concrete or wooden floor, a roof, and fully closed walls on all sides.

B. Provide heated storage space for materials which would be damaged by freezing.

C. Protect mechanical and electrical equipment from being contaminated by dust, dirt, and moisture.

D. Maintain humidity at levels recommended by manufacturers for electrical and electronic equipment.

1.05 MAINTENANCE OF STORAGE

A. Maintain periodic system of inspection of stored products on scheduled basis to assure that:

1. State of storage facilities is adequate to provide required conditions.

2. Required environmental conditions are maintained on continuing basis.

3. Products exposed to elements are not adversely affected.

PART 2 PRODUCTS – NOT USED

PART 3 EXECUTION – NOT USED

END OF SECTION

SECTION 01630

SUBSTITUTIONS

PART 1 GENERAL

1.01 SECTION INCLUDES

A. Submission Procedures

B. CONTRACTOR responsibilities.

C. Acceptance Criteria.

D. Engineering Costs.

1.02 RELATED SECTIONS

A. All technical sections of these specifications.

1.03 SUBMITTALS

A. Any item substituted as an "or equal" shall be considered a substitution.

B. Within thirty (30) days after execution of Agreement, ENGINEER will consider formal request from CONTRACTOR for substitution of products or construction methods.

C. Within thirty (30) days after execution of Agreement, submit five (5) copies of complete list of products proposed for substitution in the Work tabulated by Sections and with complete data and identification. Include in the submission the following:

1. Complete data substantiating compliance of proposed substitution with Contract Documents.

2. For products:

a. Product identification, including the name and address of the manufacturer.

b. Literature of the manufacturer complete with product description, performance and test data, and reference standards.

c. Samples.

d. Name and address of similar projects on which product was used, and date of installation.

3. For construction methods:

a. Detailed description of proposed method.

b. Drawings illustrating methods.

c. Itemized comparison of proposed substitution with product or method specified.

d. Data relating to changes in construction schedule.

e. Relation to separate contracts, if any.

f. Accurate cost data on proposed substitution in comparison with product or method specified.

1.04 CONTRACTOR'S RESPONSIBILITIES

A. In making request for substitution the CONTRACTOR represents:

1. CONTRACTOR has personally investigated proposed product or method, and determined that it is equal or superior in all respects to that specified.

2. CONTRACTOR will provide the same or better guarantee for substitution as for product or method specified.

3. CONTRACTOR will coordinate installation of accepted substitution into Work, making such changes as required in all respects.

4. CONTRACTOR waives all claims for additional costs related to substitution that consequently becomes apparent.

5. Cost data is complete and includes all related costs under this Contract.

1.05 ACCEPTANCE CRITERIA

A. ENGINEER will determine whether substitute brands or products are equal to those specified in the Contract Documents.

B. If the ENGINEER determines that a substitute is not equal to that named in the specification, the CONTRACTOR shall furnish one of the brands or products specified, at no additional cost to the OWNER.

C. Substitutions will not be accepted if:

1. They are only shown or implied on Shop Drawings.

2. Acceptance will require substantial revision of Contract Documents.

3. Substitutions would change design concepts or Specifications.

4. Substitutions would delay completion of the Work.

5. Substitutions involve items for which a manufacturer was declared at time of bidding.

6. Substitution is not compatible with existing equipment.

1.06 ENGINEERING COSTS

A. CONTRACTOR shall reimburse the OWNER for actual evaluation costs of ENGINEER and his consultants if:

1. Proposed substitute does not meet requirements of the Contract Drawings and Specifications and is rejected.

2. Acceptance of proposed substitute requires changes to the Work.

B. CONTRACTOR shall reimburse OWNER for all associated engineering costs, including redesign, additional Shop Drawing reviews, investigations, consultant fees, and revision of the Contract Documents required because of the substitution.

C. Costs of ENGINEER shall be the sum of the following:

1. Salary costs.
2. Overhead costs.
3. Out-of-pocket costs.
4 Consultant fees.

PART 2 PRODUCTS – NOT USED

PART 3 EXECUTION – NOT USED

END OF SECTION

SECTION 01650

FIELD TESTS OF EQUIPMENT

PART 1 - GENERAL

1.01 SECTION INCLUDES

A. Definition of CONTRACTOR'S responsibility in the startup, commission, and testing of equipment installed under this Contract.

1.02 RELATED SECTIONS

A. Section 01010 - Summary of Work.

B. Section 01660 – Starting of Systems.

C. Section 01700 – Contract Closeout.

1.03 SUBMITTALS

A. CONTRACTOR shall submit a testing plan for each piece of equipment for the OWNER'S/ENGINEER'S approval. The plan shall include, at a minimum, items defined below in Preliminary and Final Testing.

1.04 PRELIMINARY TESTS

A. CONTRACTOR shall make preliminary field tests of equipment as soon as conditions permit. This shall include, but not be limited to, the following:

1. Verification, proper and complete, of lubrication.

2. Verification of electric power, wiring phasing and capacity.

3. Verification of mechanical adjustments and alignments (i.e., seals, couplings, bolt tension, etc.).

4. Verification of operation of ancillary systems such as seal water, lube and cooling water systems, etc.

5. Verification of proper rotation.

6. Verification of foundation and anchor integrity.

B. CONTRACTOR shall furnish all water or chemicals, labor, materials, instruments, fuel, incidentals, and expendables required, unless otherwise provided. Locations of temporary connections for obtaining water shall be designated at the time of approval of CONTRACTOR'S proposed testing plan and schedule.

C. CONTRACTOR shall make all changes, adjustments and replacements required to place equipment in service.

D. OWNER shall provide water for initial field test of equipment. If repeated field tests of equipment are necessary, CONTRACTOR shall pay to the OWNER all costs for water supplied.

E. ENGINEER shall be given sufficient prior notice to witness tests.

1.05 FINAL TESTS

A. Upon completion of the Work, but prior to final acceptance, CONTRACTOR shall perform final field testing on all equipment.

B. CONTRACTOR shall provide the services of the manufacturer's field service representative for the duration of final testing. The field services representative shall be knowledgeable in the startup and troubleshooting of the equipment, and be capable of inspection of equipment installation and approval of the same for operation and acceptable installations.

C. Purpose of the tests is to demonstrate that equipment is:

1. Properly installed. This shall include, but not be limited to, the following:

a. Equipment operates within vibration and temperature tolerances.

b. Equipment can complete intended operation without bending or overload.

2. Completely ready for operation by the OWNER. This shall include, but not be limited to, the following:

a. All controls are in place and function properly, as designed. Equipment sequence, as specified.

b. All subsystems in place and function properly, as designed.

3. In compliance with design conditions and all other Contract Document requirements. This shall include, but not be limited to, the following:

a. Pumps operate at specified design condition through these ranges of operations.

b. Filters and filter backwashes operate at specified design conditions through these ranges of operations.

c. Miscellaneous instruments operate at specified design conditions through these ranges of operations.

d. Heating, ventilation, dehumidification, and cooling equipment operate as specified.

D. CONTRACTOR shall furnish all labor, materials, instruments, and expendables required for the tests.

E. Until final field tests are completed and approved, CONTRACTOR shall make all necessary changes, adjustments and replacements.

F. CONTRACTOR shall submit a written report of equipment testing including alignment results, lubrication verification (quantity and type), etc.

G. CONTRACTOR shall notify ENGINEER at least 24 hours prior to beginning of tests. CONTRACTOR shall keep notes and data on tests and submit copy to the ENGINEER. ENGINEER and OWNER'S operating personnel shall witness all tests.

PART 2 - PRODUCTS – NOT USED.

PART 3 - EXECUTION – NOT USED.

SECTION 01660

STARTING OF SYSTEMS

PART 1 - GENERAL

1.01 SECTION INCLUDES

A. Starting systems.

B. Demonstration and instructions.

1.02 RELATED SECTIONS

A. Section 01010 – Summary of Work.

B. Section 01700 - Contract Closeout.

C. Section 01650 - Field Tests of Equipment.

1.03 SUBMITTALS

A. CONTRACTOR shall submit a System Startup Plan for each system for the OWNER/ENGINEER'S approval. The Plan shall include at a minimum equipment involved, required personnel involvement, schedule, and proposed startup methodology.

1.04 STARTING SYSTEMS

A. Coordinate schedule for start-up of various equipment systems with the OWNER and all other CONTRACTORS involved in the installation and successful completion of the system.

B. Notify the ENGINEER and OWNER a minimum of seven (7) days prior to start-up of each item.

C. Verify field testing of equipment within the system is complete (refer to Section 01650).

D. Execute startup of systems under supervision of applicable personnel (either the personnel of the CONTRACTOR or the personnel of the manufacturer as specified in the individual technical Specification Sections) in strict accordance with the instructions of the manufacturer.

E. Systems at a minimum shall be cycled through a complete sequence from start to finish, all safety interlocks and controls shall be verified, system capacity and volumes shall be confirmed.

F. Submit a written report that equipment or system has been properly installed and is functioning correctly.

1.05 DEMONSTRATION AND INSTRUCTIONS

A. Demonstrate operation and maintenance of products to the personnel of the OWNER a minimum of two (2) weeks prior to date of Substantial Completion.

B. Demonstrate new project equipment and instruct the personnel of the OWNER in a classroom type environment by a qualified representative of the manufacturer who is knowledgeable about the project.

C. For equipment or systems requiring seasonal operation, perform demonstration for other season prior to the beginning of the season when the equipment will be utilized.

D. Utilize operation and maintenance manuals as basis for instruction. Review contents of manual with the personnel of the OWNER.

E. Demonstrate start-up, operation, control, adjustment, trouble-shooting, servicing, maintenance, and shutdown of each item of equipment at the agreed upon time, at a designated location.

F. Prepare and insert additional data in operations and maintenance manuals when need for additional data becomes apparent during instruction.

PART 2 – PRODUCTS – NOT USED

PART 3 – EXECUTION – NOT USED

END OF SECTION

SECTION 01700

EXECUTION REQUIREMENTS

1.1 SECTION INCLUDES

A. Examination.

B. Preparation.

C. Field surveying.

D. Restoration.

E. Progress cleaning.

F. Final cleaning.

G. Removal and disposal.

H. Starting and adjusting.

I. Protection of installed work.

J. Closeout procedures.

K. Project record documents.

L. Spare parts, maintenance materials, and extra materials.

M. Operation and maintenance data.

N. Warranties.

O. Measurement and payment.

1.2 EXAMINATION

A. Prior to commencement of work at the Site, inspect the Site with ENGINEER to review and establish the condition of surface features including existing roads, parking areas, buildings, wells, trees and other plants, grassed areas, fencing, service poles, wires, paving, and survey bench marks or monuments on or adjacent to the Site which may be affected by the Works. This inventory shall be mutually agreed between ENGINEER and CONTRACTOR and shall not thereafter be subject to dispute. Such inventory as may be amended, from time to time, will be used by ENGINEER to check compliance by CONTRACTOR with the requirements of the contract documents.

B. Provide ongoing review, inspection, and attendance during performance of the Works to properly document conditions. Promptly inform ENGINEER of any existing condition at the Site affected by the Works, which may require restoration, repair, or replacement. Do not cover up any of the Works without prior approval from ENGINEER.

C. Maintain and protect existing Site structures and facilities from damage which may be affected by the Works while work is in progress. Repair or replace damage resulting from the Works to ENGINEER's approval.

D. Verify that existing Site conditions and substrate surfaces are acceptable for subsequent work. Beginning new work means acceptance by CONTRACTOR of existing conditions.

E. Verify that existing substrate is capable of structural attachment of new work being applied or attached or that existing or previously constructed surfaces are ready to receive subsequent work.

F. Examine and verify specific conditions described in individual Sections.

G. Verify that utility services are available, of the correct characteristics, and in the correct location.

1.3 PREPARATION

A. Clean substrate surfaces prior to applying next material or substance.

B. Seal cracks or openings of substrate prior to applying next material or substance.

C. Apply manufacturer required or recommended substrate primer, sealer, or conditioner prior to applying new material or substance in contact or bond.

1.4 FIELD SURVEYING

A. Quality Assurance:

1. Employ a land surveyor registered in the State of Indiana and acceptable to ENGINEER to perform survey work of this Article.

2. ENGINEER may, at any time, check CONTRACTOR's survey and layout work but this shall not relieve CONTRACTOR of any of its responsibilities to carry out the Works to the lines and grades set out in accordance with the Drawings and the Project Specifications or as otherwise necessary for performance of the Works in accordance with the contract documents.

B. Record Documents:

1. Maintain a complete and accurate log of control and survey work as it progresses.

2. Prepare a certified survey illustrating dimensions, locations, angles, and elevations of construction, and the Site work.

3. Submit record documents under provisions of Article 1.12.

C. Survey Reference Points:

1. Locate, preserve, and protect survey control and reference points.

2. Control datum for survey is that established by OWNER.

3. Promptly report to ENGINEER the loss or destruction of any reference point or relocation required because of changes in grades or other reasons.

4. Make good any errors entering into the Works through CONTRACTOR failure to notify ENGINEER concerning lack of preservation of such survey reference points.

5. Accurately replace or relocate disturbed reference or survey control points based on original survey control. Make no changes without prior written notice to and approval of ENGINEER.

D. Survey Requirements:

1. Utilize recognized engineering survey practices. Locate and lay out the Works using properly calibrated instrumentation.

2. Establish elevations, lines, and levels.

3. Periodically verify layouts by same means and methods.

4. Establish a minimum of two temporary bench marks on the Site, referenced to established control points. Record locations, with horizontal and vertical data, on Project record documents.

5. Provide reasonable and necessary opportunities and facilities for setting points and making measurements during construction.

6. Develop and make such additional detailed surveys as are needed for construction, such as bench marks, slope stakes, batterboards, stakes for establishing the design elevations of excavations and final grades, and other working points, lines, and elevations. Maintain bench marks and base lines established, existing property boundaries, lines and grade hubs, and other references and construction or survey points.

1.5 RESTORATION

A. As a minimum, restoration shall mean replacement, repairs, or reconstruction to a condition at least as good as or better than the condition prior to commencement of the Works.

B. Except where specifically required otherwise by other Sections, restore areas of the Works and areas affected by the performance of the Works to conditions that existed prior to commencement of the Works and to match condition of similar adjacent, undisturbed areas.

C. Ensure that restored areas match existing grade and surface drainage characteristics, except as otherwise specified, and ensure a smooth transition from restored surfaces to existing surfaces.

D. Do not alter original conditions without prior written approval from ENGINEER.

E. Without limiting the generality of the foregoing or other requirements of the contract documents, preserve and protect existing features encountered at the Site during the performance of the Works including, but not limited to buildings, wells, structures, curbs and gutters, fences, pavement, manholes and catch basins, utilities, railroad sidings, roads, streets, walks, grassed areas, and other graded or improved areas.

F. Utilize construction methods and procedures during the performance of the Works which keeps disturbance and damage of whatever nature to existing conditions to the practical minimum. Where work necessitates root or branch cutting, do not proceed without ENGINEER's prior approval.

G. Ensure that quality, grades, elevations, and extent of bedding, cover, and other backfill materials including subgrades, finish grades, and thickness of pavements for roadways and parking areas are properly documented during their removal to ensure reconstruction to at least their original and functional condition.

H. Restoration Material: New, except as otherwise specified, not damaged or defective, and of the best quality for the purpose intended. Furnish evidence as to type, source, and quality of materials or products furnished when requested by ENGINEER or specified in other Sections.

I. Should any dispute arise as to the quality or fitness of materials, whether obtained on the Site or off the Site, whether previously inspected by ENGINEER prior to use or not, the decision to use any material or product in the finished Works will rest solely with ENGINEER.

J. Remove from the Site clean material not approved for reuse.

K. Handle and store products and materials in a manner to prevent damage, adulteration, deterioration, and soiling and in accordance with manufacturer's instructions when applicable.

L. Prior to commencement of restoration work, inform ENGINEER of proposed material, methods, and procedures to repair, replace, or reconstruct disturbed, damaged, or suspected damage to the Works.

M. Perform cutting, fitting, remedial, and coordination work to make the several parts of the Works fit together.

N. Except as specified otherwise, dismantle and salvage materials for reuse where practicable. Exercise due care when removing material for salvage. Repair or replace materials damaged through improper handling or through loss after removal.

O. Store and protect removed material approved for reuse in approved locations. Beginning of restoration work means acceptance of existing conditions.

P. Unless otherwise specified, restore pavement by:

1. Removing and replacing the entire portions between joints or scores and not merely refinishing or patching localized areas.

2. Saw cutting surfaces, curbs and gutters, and similar structures or surfaces.

3. Protecting adjacent joints and load transfer devices and underlying granular materials.

1.6 PROGRESS CLEANING

A. Execute cleaning during progress of the Works as required, but no less than daily.

B. Requirements of Regulatory Agencies:

1. In addition to the requirements herein, maintain the cleanliness of the Works and surrounding premises within the Works limits so as to comply with federal, state, and local fire and safety laws, ordinances, codes, and regulations.

2. Comply with all federal, state, and local anti-pollution laws, ordinances, codes, and regulations when disposing of waste materials, debris, and rubbish.

C. Coordinate cleaning operations with disposal operations to prevent accumulation of dust, dirt, debris, rubbish, and waste materials on or within the Works or on the premises surrounding the Works.

1.7 FINAL CLEANING

A. Execute final cleaning prior to Substantial Completion of the Works.

B. Clean interior and exterior glass, surfaces exposed to view; remove temporary labels, stains and foreign substances, polish transparent and glossy surfaces.

C. Clean equipment and fixtures to a sanitary condition with cleaning materials appropriate to the surface and material being cleaned.

D. Clean debris from roofs, gutters, downspouts, and drainage systems.

E. Clean the Site; sweep paved areas, and rake clean landscaped surfaces.

F. Repair pavement, roads, sod, and all other areas affected by construction operations and restore them to original condition or to minimum condition specified.

G. Maintain cleaning until acceptance and occupation by OWNER.

1.8 REMOVAL AND DISPOSAL

A. Remove surplus materials and temporary facilities and controls from the Site.

B. Dispose of all non-contaminated waste materials, litter, debris, and rubbish off Site.

C. Do not burn or bury rubbish and waste materials on the Site.

D. Do not dispose of volatile or hazardous wastes such as mineral spirits, oil, or paint thinner in storm or sanitary drains.

E. Do not discharge wastes into streams or waterways.

F. Dispose of the following materials at an appropriate off-Site facility identified by CONTRACTOR and approved by OWNER:

1. Debris including excess construction material, non-contaminated litter and rubbish.

2. Spent Tyvek and other disposable PPE worn during final cleaning.

3. Soil cuttings.

4. Well development water.

G. Dispose of materials in accordance State of Indiana regulations and local requirements and as directed by ENGINEER.

1.9 STARTING AND ADJUSTING

A. Adjust operating products and equipment to ensure smooth and unhindered operation.

1.10 PROTECTION OF INSTALLED WORK

A. Protect installed work and provide special protection where specified in individual Sections.

B. Provide temporary and removable protection for installed products. Control activity in immediate work area to prevent damage.

C. Provide protective coverings at walls, projections, jambs, sills, and soffits of openings.

D. Protect finished floors, stairs, and other surfaces from traffic, dirt, wear, damage, or movement of heavy objects, by protecting with durable sheet materials.

E. Prohibit traffic or storage upon waterproofed or roofed surfaces. If traffic or activity is necessary, obtain recommendations for protection from waterproofing or roofing material manufacturer.

F. Prohibit traffic upon landscaped areas.

G. Maintenance of Flow: Maintain the flow of water in the water distribution system and in existing sewers, drains, and watercourses. In the event that any emergency or situation should arise which requires interruption of normal operation of any existing systems, restore normal operation as soon as possible even though permission for such planned shutdown was obtained.

H. Flotation: Take necessary precautions against the flotation of any structures during construction. Make good any damage caused by flotation.

1.11 CLOSEOUT PROCEDURES

A. Submit written certification that the contract documents have been reviewed, the Works has been inspected, and that the Works is complete in accordance with the contract documents and in compliance with Laws and Regulations including, but not limited to, the provision of all applicable federal, state, and local health, safety, and environmental laws and regulations, including OSHA, and ready for ENGINEER's review.

B. Submit final Application for Payment identifying previous payments and amounts remaining due.

C. Complete and furnish submittals to ENGINEER that are required by governing or other authorities and by the contract documents. Payment shall not become due and payable until all submittals have been made acceptable to ENGINEER.

1.12 PROJECT RECORD DOCUMENTS

A. Maintain one set of the following record documents on the Site; record actual revisions to the Works:

1. Drawings.

2. Specifications.

3. Change Orders and other modifications to the contract.

4. Reviewed Shop Drawings, product data, and Samples.

5. Manufacturer's instruction for assembly, installation, and adjusting.

B. Ensure entries are complete and accurate, enabling future reference by OWNER.

C. Store record documents separate from documents used for construction.

D. Record information concurrent with construction progress.

E. Specifications: Legibly mark and record, at each Section of the Specifications, a description of actual products installed, including the following:

1. Manufacturer's name and product model and number.

2. Product substitutions or alternates utilized.

3. Changes made by modifications.

F. Record Documents and Shop Drawings: Legibly mark each item to record actual construction including:

1. Measured depths of foundations in relation to finished floor datum.

2. Measured horizontal and vertical locations of underground utilities and appurtenances, referenced to permanent surface improvements.

3. Measured locations of internal utilities and appurtenances concealed in construction, referenced to visible and accessible features of the Works.

4. Field changes of dimension and detail.

5. Details not on original Drawings.

G. Remove ENGINEER title block and seal from all documents generated by CONTRACTOR.

H. Submit documents to ENGINEER.

1.13 SPARE PARTS, MAINTENANCE MATERIALS, AND EXTRA MATERIALS

A. Provide products, spare parts, maintenance, and extra materials in quantities specified in individual Sections.

B. Deliver to the Site or other location to be specified; obtain receipt from ENGINEER or OWNER.

C. Provide list of spare parts and maintenance and extra materials furnished prior to final payment.

1.14 OPERATION AND MAINTENANCE DATA

A. Submit data bound in 8 1/2 by 11-inch text pages, 3-D side ring binders with durable plastic covers.

B. Prepare binder cover with printed title "OPERATION AND MAINTENANCE INSTRUCTIONS", title of Project, and subject matter of binder when multiple binders are required.

C. Internally subdivide the binder contents with permanent page dividers, logically organized as described below; with tab titling clearly printed under reinforced laminated plastic tabs.

D. Contents: Prepare a Table of Contents for each volume, with each product or system description identified, typed on white paper, in three parts as follows:

1. Part 1: Directory, listing names, addresses, and telephone numbers of ENGINEER, CONTRACTOR, Subcontractors, and major equipment Suppliers.

2. Part 2: Operation and maintenance instructions, arranged by process flow and subdivided by component. For each category identify names, addresses, and telephone numbers of Subcontractors and Suppliers. Identify the following:

1. Significant design criteria.

2. List of equipment.

3. Parts list for each component.

4. Operating instructions.

5. Maintenance instructions for equipment and systems.

3. Part 3: Project documents and certificates, including the following:

1. Shop Drawings and product data.

2. Certificates.

3. Photocopies of warranties and bonds.

E. Submit two draft copies of completed volumes 15 days prior to final inspection. These copies will be reviewed and returned, with ENGINEER's comments. Revise content of all document sets as required prior to final submission.

F. Submit three sets of revised final volumes within 15 days after final inspection.

1.15 WARRANTIES

A. Obtain warranties, executed in duplicate by responsible Subcontractors and Suppliers within 14 days after completion of the applicable item of work. Except for items put into use with OWNER's permission, leave date of beginning of time of warranty open until the date of Substantial Completion is determined.

B. Verify that documents are in proper form, contain full information, and are notarized.

C. Co-execute submittals when required.

D. Retain warranties until time specified for submittal.

E. Bind in commercial quality 8 1/2 by 11-inch 3-D side ring binders with durable plastic covers. Identify each binder with typed title WARRANTIES, with title of Project; name, address, and telephone number of CONTRACTOR and equipment Supplier; and name of responsible company principal. Neatly type Table of Contents, in the sequence of the Table of Contents of the contract documents, with each item identified with the number and title of the Section in which specified, and the name of the project or work item. Separate each warranty with index tab sheets keyed to the Table of Contents listing. Provide full information, using separate typed sheets as necessary. List Subcontractor and Supplier, with name, address, and telephone number of responsible principal.

F. Make submittals within 10 days after the date of Substantial Completion.

G. For items of the Works for which acceptance is delayed beyond the date of Substantial Completion, furnish updated submittal within 10 days after acceptance of the affected item. The date of acceptance of such item shall be the start of the warranty period for that item.

END OF SECTION

SECTION 01800

FACILITY OPERATION

1.1 SECTION INCLUDES

A. Definitions.

B. Progress submittals.

C. Closeout submittals.

D. Qualifications.

E. Pre-commissioning meeting.

F. Sequencing and scheduling.

G. Manufacturer's field services.

H. Commissioning.

I. Demonstration.

J. Training.

K. Turnover.

L. Commissioning report.

M. Schedules.

N. Measurement and payment.

1.2 DEFINITIONS

A. For commissioning purposes, the term "facility" means the Works of this contract entirely.

B. The term "commission" or "commissioning" means the overall process of starting, testing, adjusting, and balancing the various components, equipment, and subsystems of the facility to place the facility into a fully operational condition.

1.3 PROGRESS SUBMITTALS

A. Submit, 14 days prior to start of commissioning, 2 draft copies of the operations and maintenance manuals in accordance with Section 01700.

B. Submit, 14 days prior to start of commissioning, a written procedure to be followed in commissioning the facility, indicating order of specific component, equipment, or subsystems to be commissioned, personnel or resources required, and expected time for each task. Include specific rates, upper and lower limits, duration at each rate, and any special requirements for setup or adjustments to complete each specific task. Indicate any deficiencies in the facility that would prevent proper testing, adjusting, and balancing of systems and equipment to achieve specified performance.

C. Submit, 14 days prior to start of commissioning, sample report forms or outlines indicating adjusting, balancing, and equipment data to be recorded, on forms prepared specifically for commissioning of the facility, containing information as outlined in Article 1.14. Record data in U.S. units. Report actual locations of measurements and approximate position of valves.

D. Submit, 7 days prior to start of commissioning, written confirmation that every individual component and piece of equipment has been installed and tested alone and in combination with related components.

E. Certify to ENGINEER that the facility has been fully and successfully commissioned, prior to start of demonstration period.

1.4 CLOSEOUT SUBMITTALS

A. Section 01700 - Execution Requirements: Requirements for closeout submittals.

B. Submit, within 14 days after completion of commissioning, 2 draft copies of the commissioning report, covering all aspects of the starting, testing, adjusting, and balancing of the individual components, equipment, and subsystems of the facility. Include all completed report forms or outlines, for review and approval of ENGINEER.

1.5 QUALIFICATIONS

A. Provide CONTRACTOR appointed commissioning supervisor, experienced in the installation and operations of the various components, equipment, and subsystems of the facility.

B. Provide personnel experienced in the installation and operations of the various components, equipment, and subsystems of the facility. Personnel to perform work under direct supervision of CONTRACTOR-appointed commissioning supervisor.

1.6 PRE-COMMISSIONING MEETING

A. A pre-commissioning meeting shall be held 7 days prior to commencing work of this Section.

B. Attendance at the pre-commissioning meeting shall include OWNER, ENGINEER, CONTRACTOR-appointed commissioning supervisor, and key CONTRACTOR personnel involved with the commissioning of the Works.

1.7 SEQUENCING AND SCHEDULING

A. Other Sections of the Specifications may contain specific installation, lubrication, cleaning, disinfecting, checking, testing, setting, calibration, adjusting, balancing, or operations requirements, which are to be followed in conjunction with this Section.

B. Every individual component and piece of equipment shall be tested alone and in combination with related components (subsystems) to ensure that the component and the subsystem are in perfect operating condition, comply with specified requirements, and are ready for incorporation in the overall system and entire facility operations.

C. Coordinate schedule for startup and testing of various equipment and systems. Follow the procedure and schedule established for commissioning unless otherwise approved by ENGINEER.

D. Schedule and provide assistance in final adjustment and testing of the fire and security systems with the ENGINEER and local authority.

1.8 MANUFACTURER'S FIELD SERVICES

A. Manufacturer's field services for equipment as specified in other Sections.

1.9 COMMISSIONING

A. Commissioning shall normally proceed in 4 steps:

1. Commissioning of individual components and equipment forming subsystems, ready for subsystem operations.

2. Commissioning of subsystems and the overall facility in its entirety.

3. Demonstration and training of the operations of individual components, equipment, subsystems, and the overall facility.

4. Turn over of facility to OWNER.

B. Commissioning shall be performed by CONTRACTOR, in the presence of ENGINEER and OWNER's personnel. CONTRACTOR's appointed commissioning supervisor is to lead the commissioning group of CONTRACTOR personnel, Subcontractor personnel, and manufacturer/Supplier representatives.

C. During the commissioning and demonstration period, only CONTRACTOR shall operate the facility, ENGINEER and OWNER's personnel shall only observe and receive operations instructions.

D. Starting Systems and Testing:

1. Verify that each component, piece of equipment, or subsystem has been checked for all required connections, proper lubrication, drive rotation, alignment, belt tension, control sequence, safety devices, operating speed, leakage, or for other conditions which may cause damage.

2. Verify that tests, meter readings, and specified electrical and mechanical characteristics for equipment, instruments, and systems, agree with those required by the equipment or system manufacturer. Verify wiring and support components for equipment are completed and tested. Record data for startup and testing against various requirements on prescribed forms.

3. Provide instruments required for testing, adjusting, and balancing operations. Make instruments available to ENGINEER and OWNER's personnel to facilitate spot checks.

4. Simulate flow, level, or other signals as needed to troubleshoot the control system. Include the manual or automatic activation of field devices. Verify operations of alarms and related failure logic.

5. Starting systems and testing will be performed by qualified technician or manufacturer's representative who is knowledgeable about the equipment or subsystem under direction of CONTRACTOR's commissioning supervisor.

6. Execute startup under supervision of CONTRACTOR's personnel in accordance with manufacturer's instructions. Record performance of equipment, instrumentation, and systems at startup.

E. Adjusting and Balancing:

1. Adjusting and balancing to be performed under direction of CONTRACTOR's commissioning supervisor by qualified technician or manufacturer's representative knowledgeable about the specific equipment or subsystem.

2. Ensure recorded data represents actual measured or observed conditions.

3. Mark settings of valves, dampers, and other adjustment devices, allowing settings to be restored. Set and lock any memory stops.

4. After adjustment, take measurements to verify balance has not been disrupted or that such disruption has been rectified.

5. Leave systems in proper working order, replacing belt guards, closing access doors, replacing switch box covers, and restoring systems to specified settings.

F. Fulfillment of commissioning period requires CONTRACTOR operation of the facility as a complete system, at nominal rates, for 7 continuous calendar days, without fault in operations. Training period duration will begin only upon successful completion of the commissioning period.

G. In the event that the commissioning, demonstration, or training period has to be extended because of the malfunctioning of or problems with equipment, CONTRACTOR shall be responsible for all costs arising out of any extension of time at no additional cost to OWNER.

H. Inform all Subcontractors and Suppliers/manufacturers of the requirements herein and include all costs for the required services in the Contract Price. Where a minimum amount of time is stated in the Specifications for a manufacturer's services, any additional time required to perform the specified services satisfactorily shall be at no additional cost to OWNER.

1.10 DEMONSTRATION

A. Demonstrate operations, maintenance, and calibration of each piece of equipment, instrument, and system. Instruction to be by a qualified technician or manufacturer's representative who is knowledgeable about the instrument, equipment, or subsystem.

B. Demonstrate startup, operations, control, adjustment, troubleshooting, servicing, maintenance, and shutdown of each component or piece of equipment at agreed time.

C. During the demonstration period, CONTRACTOR shall demonstrate that operations of the facility as a whole is correct and in accordance with the contract requirements by demonstrating individual components, equipment, and subsystems.

D. All malfunctions, alarms, safety devices, interlocks, and annunciation, which exist as actual field devices or which may exist as programmable logic control (computer programming), shall be demonstrated by simulation of conditions as necessary.

E. Should the demonstration reveal any defects, then such effects shall be promptly rectified by CONTRACTOR and the demonstration of the equipment repeated to the satisfaction of ENGINEER. Should such repeat demonstration require a second or subsequent visit to the Site by ENGINEER and/or OWNER's personnel, then the additional costs incurred shall, at the discretion of ENGINEER, be paid for by CONTRACTOR.

F. All components shall be demonstrated over the entire range of operations specified, including variations in flow, pressures, speeds and controls. See Schedule provided in this Section for summary of performance characteristics criteria.

1.11 TRAINING

A. Provide a training program to OWNER and any designated personnel assigned for operations and maintenance of the facility.

B. Arrange with suppliers of equipment for the provision of a qualified representative to provide training for OWNER's personnel.

C. Coordinate and establish with each Supplier and Subcontractor the time period necessary to complete training of OWNER's staff. The minimum time for any one session to be allowed for by the Supplier shall be four hours.

D. Arrange for the provision of these training sessions by the Supplier and Subcontractor through ENGINEER, who will coordinate the necessary arrangements with OWNER.

E. Provide for two training sessions. The period between such sessions shall be approximately one week, or as mutually agreed between CONTRACTOR and OWNER.

F. Training of OWNER's Personnel:

1. Throughout the commissioning period, provide access to OWNER’s personnel to observe the operations of the facility. OWNER’s personnel will not operate equipment during the commissioning period.

2. Following successful commissioning of the facility, CONTRACTOR shall train two of OWNER's personnel over a period of one week to operate the facility.

3. CONTRACTOR shall:

1. Demonstrate operations and maintenance of each piece of equipment, instrument, and system.

2. Utilize operations and maintenance manuals as a basis for training. Review contents of manuals with OWNER's personnel in detail, to explain all aspects of operations and maintenance.

3. Prepare and insert additional data in operations and maintenance manuals when need for additional data becomes apparent during demonstration or training.

4. Establish through verbal examination and demonstration, that OWNER's personnel are fully cognizant of the operations and maintenance requirements of the facility.

1.12 TURNOVER

A. Turnover of the facility for operations by OWNER shall occur only upon completion and acceptance of all demonstration and training of the operations of the facility by ENGINEER.

1.13 COMMISSIONING REPORT

A. Commissioning Report shall include:

1. Title Page:

1. Project name, location, name of ENGINEER and Project reference number, name of CONTRACTOR and Project reference/identification.

2. Name, address, telephone number, and Project reference/identification of testing, adjusting, and balancing agency, and date of report.

2. Summary Comments:

1. Design performance versus final performance.

2. Notable characteristics of system.

3. Description of system operations sequence.

4. Summary of flows, from source to outlet, including any internal circulation lines or secondary processes.

5. Nomenclature used throughout report.

6. Test conditions.

3. Specific Equipment Test Parameters:

1. Instrument List: Unique identification tag, instrument name, manufacturer, model number, serial number, range of instrument, and calibration date.

2. Motor Requirements: Unique identification tag, manufacturer, model/frame, HP/BHP, phase, voltage, amperage (nameplate, actual, and no load conditions), rpm, service factor, starter size and rating, heater elements, and coupling or direct drive information.

3. Blower Data: Unique identification tag, manufacturer, model, orientation, rpm, and flow rate.

4. Pump Data: Unique identification tag, manufacture, size/model, outlet connection size and type, impeller data, service, flow rate and pressure drop across pump, BHP, discharge pressure, suction pressure, total operating head pressure , discharge and suction pressures at shut off, and total head pressure at shutoff. Note: Provide design and actual data where applicable.

5. Sound Level Report: Location, equipment off conditions, and equipment running conditions (provide for multiple run conditions if applicable). Check sound levels inside building and at property line.

6. Vibration Test Report: Location of test points (equipment bearing drive or opposite end, motor bearing drive or opposite end, casing top or bottom, duct connection after flexible connector on suction or discharge side), test readings, normally acceptable readings, unusual conditions at time of test, and vibration source if non-complying.

B. Include all completed test report forms as an appendix to the commissioning report.

C. Include manufacturer's representative's reports in a separate appendix to the report.

1.14 SCHEDULES

A. Performance test equipment and system in accordance with the following:

	Component, Equipment, or Subsystem Commissioning Duration Requirement	*Minimum Rate and Duration*	*Maximum Rate and Duration*	*Nominal Rate and Duration*
1.	Building Sump Pump	- -	- -	50 gpm 4 hours
2.	Air Sparge Blower No. 1	- -	- -	400 scfm 24 hours
3.	Air Sparge Blower No. 2	- -	- -	400 scfm 24 hours
4.	SVE Blower No. 1	- -	- -	600 cfm 24 hours
5.	SVE Blower No. 2	- -	- -	600 cfm 24 hours
6.	Exhaust Fan	- -	- -	2 days
7.	Unit Heater	- -	- -	2 days
8.	Lighting	- -	- -	2 days
9.	Electrical Panel Heater	- -	- -	2 days
10.	Control Components	- -	- -	2 days

END OF SECTION

SECTION 02221

TRENCHING, BACKFILLING AND COMPACTING

PART 1 GENERAL

1.01 SECTION INCLUDES

A. Excavating trenches for piping and utilities.

B. Backfilling and compacting around foundations, under slabs on grade and exterior ramps and pads, site backfilling and backfilling for over-excavation.

1.02 REFERENCES

A. ASTM D 2922 - Density of Soil and Soil-Aggregate in Place by Nuclear Methods (Shallow Depth).

B. ANSI/ASTM D 698 -Test Methods for Moisture-Density Relations of Soils and Soil-Aggregate Mixtures, Using 5.5 lb. (2.49 Kg) Rammer and 12 inch (304.8 mm) Drop.

1.03 SUBMITTALS

A. Materials Sources: Submit name of imported materials source.

B. Fill Composition Test Reports: Results of laboratory tests on proposed and actual materials used.

C. Compaction Density Test Reports.

1.04 QUALITY ASSURANCE

A The Contractor shall employ and pay for services of the independent testing laboratory for tests required to show compliance with the specifications. Test results shall be submitted directly to the Owner Site Representative. Selection of the testing laboratory is subject to approval of the Owner Site Representative.

B Determine moisture density relations of soils encountered during construction in accordance with Standard Proctor Method. Provide graph of Proctor soil density versus water content for reach soil encountered.

C. Provide gradation and materials tests for pipe bedding and stabilizing material.

D. Test trench backfill soil density and moisture at three tests per three foot (3') lift per four-hundred lineal feet (400LF) of trench under pavements.

If trench backfill or pavement subgrade fail density tests, rework backfill or subgrade and retest until specified density is obtained.

E. Jacking, boring, or tunneling Contractor shall be a company specializing in the applicable jacking, boring or tunneling work with a minimum of 5 years and 25 jobs of satisfactory documented experience.

1.05 SITE CONDITIONS

A. Verify that survey benchmark and intended elevations for the Work are as indicated on Drawings.

1.06 GENERAL REQUIREMENTS

A. Remove excess topsoil and excavated material suitable for backfill to location obtained by the Contractor and/or identified by the Owner as shown on construction drawings.

B. Remove brush, rubbish, spoil, and material not suitable for backfill and dispose to an off-site location obtained by Contractor.
   1. Remove waste material promptly as it is generated by construction operations; do not permit it to accumulate. See also "Cleanup," this Section.
   2. Grade disposal areas periodically to reasonably neat surface to provide for drainage and access by others.
   3. Haul routes:
      a. Determine haul roads with approval of agency having jurisdiction over proposed roadway.
      b. Make condition survey of haul roads prior to use and document with necessary photographs and written descriptions.
      c. Keep reasonably free from dirt, dust, mud, and other debris from construction operations.
      d. Clean a minimum of twice a week.
      e. Repair any damaged haul routes to match existing conditions before use.

1.07 EXISTING UTILITIES

A. Before starting operations in any area in the vicinity of utility facilities, notify each utility of any operation which may affect their facilities. Provide notice to each utility sufficiently in advance of such operations to allow the utility time to mark the location of, relocate, adjust, or otherwise protect their facilities. Reach an agreement with each utility on appropriate action necessary to protect or relocate the utility facilities. The cost of such action to protect the facilities, except for locates, be borne by the Contractor. Utilize local state One-Call System, if available, for locates for those utilities which subscribe to this service. Contact all other utilities that do not subscribe to the One-Call System.

B. At all times conduct operation so that necessary clearances are maintained and said utility facilities are protected. Comply with all local, state, and federal, or other regulations in performing work near utility facilities.

C. Should the Contractor damage any of the utility facilities during Contractor's operations or determine the work cannot be performed safely. Immediately notify the utility involved and cease work until arrangements are made to prevent further damage or a serious accident.

D. Failure of the Contractor to provide timely notice to the utility or to conduct his operations in such manner that proper clearances are maintained and the utility facilities are protected at all times will be grounds for the issuance of a Stop Work Order.

E. Notify Engineer of unexpected subsurface conditions and discontinue Work in area until Engineer provides notification to resume work.

1.08 CLASSIFICATION OF MATERIALS

A. Earth: All materials not classified as rock or rubble includes: clay, silt, sand, gravel, hardpan, disintegrated shale and rock debris, junk, brick, loose stones, and boulders less than 1/3 cubic yards in volume.

B. Rock: Buried boulders larger than 1/3 cubic yards in volume or materials so hard and dense that continuous loosening by pneumatic tools or blasting is required for removal.

C. Rubble: Buried concrete foundations, beams, walls, and other materials which require continuous use of pneumatic tools or blasting.

D. Topsoil: Upper portion of soil profile containing a good supply of humus and a high degree of fertility. Topsoil is free of rocks, clods and other debris larger than 2" in diameter.

1.09 PROJECT RECORD DOCUMENTS

A. Accurately record actual locations of utilities remaining, by horizontal dimensions, elevations or inverts, and slope gradients.

PART 2 PRODUCTS

2.01 BACKFILL AND BEDDING MATERIALS

A. Pipe Bedding and Structural Backfill: Select backfill and bedding for pipes and structures shall be approved select material meeting the following gradation. Material to be free of foreign substance, debris, large stones, rocks (1-1/2 in, 37 mm.), roots, organic or frozen material, expansive material and other deleterious materials. See details on Drawings and/or Typical Detail drawings herein for typical extent of bedding and backfill.

Sieve	Percent Passing
1	100
3/4	90-100
3/8"	50-90
No. 4	35-80
No. 10	25-65
No. 40	10-35
No. 200	3-10

B. Topsoil: Fill upper portion of excavation in grass areas with 4 inches minimum of topsoil.

C. Subbase Material: To consist of approved blast furnace slag, stone, sand and gravel or blends of these materials:

Sieve	Percent Passing
3"	100
2"	90-100
1/4"	30-65
No. 40	5-40
No. 200	0-10

D. Stone top: Material to be free of foreign substance, debris, large stones, rocks (1-1/2 in, 37 mm.), roots, organic or frozen material, expansive material and other deleterious materials. See details on Drawings and/or Typical Detail drawings herein for typical extent of bedding and backfill.

Sieve	Percent Passing
1	100
3/4	90-100
3/8"	50-90
No. 4	35-80
No. 10	25-65
No. 40	10-35
No. 200	3-10

2.02 ACCESSORIES

A. Filter Fabric: Manufacturer's standard non-woven 8 ounce pervious geotextile fabric of polypropylene, nylon or polyester fibers, or a combination.
   1. Provide filter fabrics that meet or exceed the listed minimum physical properties determined according to ASTM D 4759 and the referenced standard test methods in parenthesis:
      a. Grab Tensile Strength (ASTM D 4632): 100 pounds.
      b. Apparent Opening Size (ASTM D 4751): #100 U.S. Standard Sieve.
      c. Permeability (ASTM D 4491): 150 Gallons per minute per square foot.

PART 3 EXECUTION

3.01 GENERAL

A. Trenching and backfilling: All excavation, backfilling, compacting, disposal of surplus material, furnishing additional backfill material, and all other work incidental to the construction of trenches, including any additional excavation.

B. Trench Bottom:
   1. Provide firm, stable and uniform support for full length of pipe.
   2. With acceptable soils, lay pipe on layer of loose material after leveling trench bottom. If no loose material remains, shave soft material from trench walls and compact or granular bedding. *See Part 3.08.*
   3. If trench bottom is rocky or hard, over-excavate trench and place select or granular backfill below pipe. Cushion material shall be the same as the specified bedding material.
   4. When unstable material is encountered, which may not provide a suitable foundation for pipe, remove unsuitable material and replace with stabilizing material.

C. Trees, Hedges and Shrubbery:
   1. Minimize damage caused by construction operations.
   2. Trim and repair trees, hedges, and shrubbery damaged by construction operations; remove broken branches.
   3. Cut no tree roots larger than 3" diameter (75 mm).
   4. Notify Engineer prior to removing trees larger than 2" (50 mm) diameter; and hedges and shrubbery.

5. Dispose of all items to an off-site location obtained by Contractor.

D. Use caution when placing and compacting backfill to avoid placing construction loads on pipe which may damage or displace newly laid pipe.

E. Remove, replace and repair fences, signs and other obstructions as necessary for construction; return all items to equal or better than original conditions.

F. Repair any drainage tile interrupted during the course of construction according to details on Drawings and/or Typical Detail Drawings.

G. Utility mains shown on Drawings, in conflict with new facilities: Perform relocation or make arrangements with utility to perform Work at no additional cost to Owner.

H. Utility mains not shown on Drawings, in conflict with new facilities: Notify Engineer immediately.

I. Excavate all material encountered to depth indicated on Drawings.

J. Schedule work to avoid property owner inconvenience insofar as practicable during construction.

K. Restore obstructions removed to accommodate construction equipment or to facilitate excavation.

L. Exercise care in operating equipment beneath or adjacent to trees to prevent damage.

M. Pile excavated material suitable for backfill in an orderly manner a sufficient distance from edge of excavation to avoid rollbacks, slides, or cave-ins. Stockpile topsoil.

N. Remove spoil not suitable for backfill; waste at disposal area obtained by the Contractor at no cost to the Owner.

O. Excavate in open cut the existing roads, utilities, and structures except as noted on Drawings.

P. Where new construction crosses or closely parallels existing utilities or utility services, excavate in advance of pipe laying to determine location and crossing arrangement, including exact construction line and grade.

Q. Excavations are Contractor’s responsibility and must comply with applicable local, state, and federal standards.

R. Contractor responsible for providing adequate barricades and protection around excavation and work areas.

S. Contractor responsible for providing and removing adequate temporary fencing for any fences that are disturbed by construction operations.

T. Maximum length of trench opening at any time: 300 feet (100 m).

U. Sections of the Work conducted in highway rights-of way: Strictly follow local permit requirements. Provide traffic control with signage, flagging, channeling devices, and barricades as required.

V. Temporary, unsupported cut slopes, in native soils with no seepage, shall not be excavated any steeper than 1.5H:1V. If exposed for long periods of time, cover with Visqueen to maintain stability and minimize erosion and continually monitor.

3.02 TRENCH EXCAVATION

A. Strip and stockpile topsoil for use in surface restoration.

B. Keep sides of trench as nearly vertical as practicable within the limits of excavation codes and safety requirements; maintain vertical walls of excavation below top of pipe. Provide trench wall support as needed.

C. Excavate to full depth by machine; level trench bottom to provide uniform bearing and support for full length of pipe.

D. Provide bell holes at each pipe joint; allow access completely around circumference of pipe for proper jointing operations.

E. Conform to common trench bottom construction practices as recommended by pipe manufacturer.

F. Trench bottoms carried below required grade; backfill to property elevation with crushed stone as specified for sewer pipe bedding at no expense to the Owner.

G. When unstable material is encountered, which may not provide a suitable foundation for pipe.
   1. Notify Engineer immediately.
   2. Engineer will investigate questionable material to determine its suitability for pipe foundation.
   3. If material is considered unsuitable for pipe foundations, Engineer will specify and authorize remedial measures in writing.
   4. If removal of unsuitable material is authorized:
      a. Replace with trench stabilizing material.
      b. Provide minimum of 4 inches (100 mm) of bedding material on top of stabilizing material to prevent point load. Bedding material graded sufficiently coarse to prevent movement and loss of bedding into trench stabilizing material.

H. Minimize the width of trench below the top of the pipe, but maintain trench width of no less than pipe O.D. plus 24".

I. When the material being excavated is such that it is physically impossible to stabilize the trench bottom or secure a uniform bearing using dewatering and a granular foundation and in the judgment of the Engineer concrete encasement, concrete cradling or pilings are necessary to support the pipe, provide such support when directed in writing by the Engineer.

J. Provide cradling or strengthening at Contractor's expense if above trench width is exceeded.

K. Concrete encasement, concrete cradling and pilings, if not shown on the Drawings or indicated in these specifications: paid for as extra work.

L. Excavate by hand:
   1. Under and around utilities.
   2. Where overhead clearance prevents use of machine.
   3. Under trees and shrubs where shown on Drawings.

3.03 ROCK EXCAVATION

A. Rock excavation: Rock requiring the use of pneumatic tools or explosives for removal.

B. When the material can be excavated by means other than pneumatic tools or explosives, such

as a ripper, this excavation considered as earth excavation and, as such, no payment made for rock excavation.

C. When rock is encountered at locations generally indicated on the Drawings, excavate and haul all rock to an approved site obtained by the Contractor at no additional cost to the Owner. Where unanticipated rock is encountered, notify Engineer prior to removal.

D. Include the cost for anticipated rock excavation hauling and disposal in the unit price as shown on Form of Proposal. Negotiate the cost for removal of unanticipated rock prior to removal.

E. Excavate to provide pipe bedding cushion for pipeline structures and appurtenances in accordance with Typical Detail Drawings herein.

F. Remove and dispose of excavated rock not suitable for backfill; disposal is incidental to cost of rock excavation.

3.04 RUBBLE EXCAVATION

A. Removal: As specified for rock.

B. Remove and dispose of excavated rubble not suitable for backfill; disposal is incidental to cost of rubble excavation.

3.05 SHEETING, SHORING, AND BRACING

A. Construct sheeting, shoring, and bracing required to hold walls of excavation and to provide safety for workers, to protect existing utilities and structures, and to permit dry conditions for construction.

B. Sheeting: wood or steel.

C. Wood sheeting driven below level of pipe: leave in place to a level 5 ft. (2 m) below finish grade.

D. Pull steel sheeting except where shown on Drawings.

E. When movable trench shield is used below spring line of pipe, lift shield prior to any forward movement to avoid pipe displacement. Fill void left by removal of shield, between consolidated fill and stable trench wall, with consolidated fill of the same type as specified adjacent to the pipe.

F. Sheeting, shoring, and bracing: not paid for as a separate pay item, but considered incidental to the project.

G. Sheeting and shoring in accordance with OSHA and all other governmental regulations. Contractor solely responsible for complying with the regulations.

3.06 DEWATERING

A. Do all work in dry conditions; obtain the Engineer's approval of proposed methods of dewatering.

B. Provide for handling water encountered during construction.

C. Lay no pipe in, and place no concrete on, excessively wet soil.

D. If groundwater is encountered, provide sumps in the trench or some other methods for removal

of water and stabilization of trench bottom.

E. Prevent surface water from flowing into excavation; remove water as it accumulates.

F. Divert stream flow and sewage away from areas of construction.

G. Do not pump water to existing sanitary sewers or onto adjacent property without approval of the Engineer and adjacent property owner.

H. Protect against settlement or damage to adjacent property.

I. Trench dewatering is incidental to the project.

3.07 BACKFILL FOR STRUCTURES

A. Backfill after concrete has cured for 5 days and has been reviewed and approved by Owner Site Representative.

B. Backfill with material removed from excavation except where granular backfill is specified; use no debris, frozen earth, large clods, stones, or other unsuitable material.

C. Backfill simultaneously on all sides of structures; protect structures from damage at all times.

D. Compact backfill at structures to density not less than specified for adjacent trench, or as shown on the Drawings.

E. Terminate backfill at finish grade as shown on Drawings; dispose of excess excavated material as directed by Engineer.

F. Prepare backfill for surface restoration as specified for adjacent trench.

G. Construct structures and appurtenances and perform backfilling as work progresses.

3.08 BEDDING AND BACKFILL FOR TRENCHES

A. Place bedding from bottom of pipe trench to pipe spring line as indicated on applicable Typical Detail Drawings contained herein. Bedding includes material below bottom of pipe as specified. Compact bedding below bottom of pipe prior to installation of pipe to minimize settlement. Bedding materials and degree of compaction as follows:

B. Bedding materials and degree of compaction as follows:

1. Bedding for Gravity Lines: Granular pipe bedding material as specified in 2.01 A. Compacted in 6 inch (150 mm) lifts from trench bottom to pipe spring line to a minimum of 90% Standard Proctor Density (ASTM D 698). Thickness of bedding material below the bottom of pipe barrel of 1/8 pipe O.D., or 4 inch (100 mm) minimum.
2. Bedding for Pressure Lines: Granular pipe bedding and backfill material as specified in 2.01 A. Where rock or other unyielding material is encountered in trench bottom, provide a cushion of granular pipe bedding with thickness as shown on Typical Detail Drawing herein. Bedding and cushioning materials compacted in 6 inch (150 mm) lifts from trench bottom to pipe spring line to a minimum of 90% Standard Proctor Density.

C. Backfill trench after locations of connections and appurtenances have been recorded. Conform to applicable Typical Detail Drawings contained herein.

D. Backfill with material removed from excavation except where imported backfill is specified; use no debris, frozen earth, large clods, stones, or other unsuitable material. If native material is too wet or dry to achieve specified compaction, Contractor required to dry or wet material or

replace with approved imported material at no additional cost to the Owner.

E. Backfill simultaneously on both sides of pipe to prevent displacement.

F. Place backfill into the trench at an angle to minimize impact on installed pipe is minimized.

G. Percent maximum density shall mean a soil density no less than the stated percent of optimum density for soil as determined by ASTM D 698, Standard Proctor Density or ASTM D 1557, Modified Proctor Density.

H. Rocks 1-1/2" (37 mm) in diameter and larger, wood, frozen earth, clods of earth and/or hard, bulky materials shall be considered as spoil materials and shall not be used as selected material for bedding, initial and trench backfill. Dispose of spoil material by hauling materials to a suitable disposal site obtained by the Contractor.

I. Place all initial backfill in such a manner so not to damage pipe. Compact to minimize settlement of trench backfill and provide optimum support of pipe.

J. Initial Backfill.
   1. Polyvinyl Chloride Pipe: Carefully place and compact initial backfill with pneumatic or mechanical tampers from the spring line to a point 1 foot (1/3 m) above tope of pipe barrel. Backfill material shall be crushed stone as specified for bedding in Part 2.01 A.
   2. High Density Polyethylene Pipe: Material and compaction as specified for trench backfill.

K. Place trench backfill only after initial backfill has been placed, compacted, and approved. Trench backfill, material and compaction requirements depend on what area the pipe is located beneath as specified. Trench backfill begins 1 foot (1/3 m) above pipe barrel and terminates at final grade or subgrade.

L. Trench Backfill.
   1. Grass Parking Areas and Unpaved Areas: Select material as previously defined. Compact backfill material to a minimum of 90% Standard Proctor Density (ASTM D 698).
   2. Paved Areas: Select material compacted in 6" (150 mm) lifts with pneumatic or mechanical tampers to finish grade or subgrade. Compact to a minimum of 95% Standard Proctor Density (ASTM D 698).

3.10 UTILITY CROSSINGS

A. Provide compacted sand or granular material under all existing utilities or service lines that are located above the new pipeline. Compact material to a minimum of 90% ASTM D 1557 Maximum Dry Density value, except in paved and structural areas, where material shall be compacted to at least 95% Maximum Dry Density value ASTM D 1557.

B. Notify utility companies before excavating; utilize local state One-Call system, if available, conform to current utility notification requirements.

C. Sections of the Work conducted in highway rights-of way: Strictly follow local permit requirements. Provide traffic control with signage, flagging, channeling devices, and barricades as required.

3.11 CLEANUP

A. Clean up each portion of construction as it is completed.

B. Remove unused stockpiled materials, rubbish, and debris and leave area in a clean and neat condition. Grade stockpile area to prevent standing surface water.

C. Leave site in a clean and neat condition. Grade to prevent standing surface water.

3.12 FIELD QUALITY CONTROL

A. Perform compaction density testing on compacted fill in accordance with ASTM D 1556, ASTM D 2167, ASTM D 2922, or ASTM D 3017.

B. Evaluate results in relation to compaction curve determined by testing uncompacted material in accordance with ASTM D 698 ("standard Proctor"), ASTM D 1557 ("modified Proctor"), or AASHTO T 180.

C. If tests indicate work does not meet specified requirements, remove work, replace and retest at no cost to Owner.

D. Frequency of Tests: Perform soil density tests uniformly throughout the placing of the fill to maintain quality control at all times. Testing in accordance with ASTM D 2922 and D698.

END OF SECTION

SECTION 02315

EXCAVATION

PART 1 GENERAL

1.01 SECTION INCLUDES

A. Excavating for footings, foundation walls, slabs-on-grade, well chambers and underground piping and utilities.

1.02 PROJECT CONDITIONS

A. Verify that survey bench mark and intended elevations for the Work are as indicated.

1.03 CLASSIFICATION OF MATERIALS

A. See specification 02221 - Trenching, Backfilling and Compacting

1.04 SUBMITTALS

A. Excavation Plan: Prior to mobilization to the Site, submit a detailed Excavation Plan demonstrating compliance with specified requirements and to permit Owner Site Representative to schedule testing and measurement activities. Include written procedures, schedules, and drawings as applicable.

PART 2 PRODUCTS - NOT USED

PART 3 EXECUTION

3.01 PREPARATION

A. Identify required lines, levels, contours, and datum locations.

B. Locate, identify, and protect utilities that remain and protect from damage.

C. Notify utility company to remove and relocate utilities.

D. Use special care when excavating under and around existing facilities. Support existing facilities and earth under facilities to prevent settlement resulting from construction operations.

3.02 EXCAVATING - GENERAL

A. General excavation for buildings and structures shall be performed within building lines and sufficiently beyond to allow for proper construction, inspection and to provide ample room for erection and removal of formwork.

B. Excavate to depth indicated on the drawings and remove all loose soil. Where soft spots are encountered, remove all unstable material and replace with structural fill in sufficient depth to develop a firm foundation as directed by the Engineer.

C. The earth surface upon which foundations, footings and structures will be placed is to be mechanically compacted to 95% of the maximum dry density in accordance with ASTM D-1557 for a depth of 12 inches.

D. Apply necessary moisture to the construction area and haul roads to prevent the spread of dust. Following excavation and grading on this project the Contractor shall be responsible

for disposing of excess material from the project to a location designated by the Owner.

E. In the event any unsuitable bearing material is encountered at design depth, this condition shall be called to the attention of the Owner, or his representative, by the Contractor and a determination will be made prior to continuance. In the event over-excavation and special backfill are required, the Contractor shall proceed as instructed by the Engineer. If unsuitable bearing subgrade conditions were caused by the Contractor's operations at the site, then the cost of reestablishing suitable bearing conditions shall be at the expense of the Contractor and as directed by the Engineer. If unsuitable bearing conditions are a natural occurrence the extra cost shall be paid by the Owner.

F. Strip grass and vegetation from entire construction area and dispose of at landfill or location obtained by the Contractor.

G. Remove topsoil to minimum depth of eight inches (8") and stockpile for reuse to finish earth surfaces. In rural crop land areas, remove topsoil to a minimum depth of twelve inches (12") and stockpile for replacement on top of excavation.

H. Provide temporary drainage facilities to prevent damage when necessary to interrupt natural drainage or flow of artificial drains.

I. Use special care when excavating under and around existing facilities and structures. Prevent settlement of existing structures which may result from construction operation.

J. Underpin adjacent structures which may be damaged by excavating work.

K. Excavate to accommodate new structures and construction operations.

L. Notify Engineer of unexpected subsurface conditions and discontinue affected Work in area until notified to resume work.

M. Do not interfere with 45 degree bearing splay of foundations.

N. Hand trim excavations. Remove loose matter.

O. Remove lumped subsoil, boulders, and rock up to 1/3 cu yd measured by volume.

P. Grade top perimeter of excavation to prevent surface water from draining into excavation.

Q. Remove excavated material that is unsuitable for re-use from site.

R. Stockpile excavated material to be re-used in area designated on site.

3.03 EXCAVATION - SUBSOIL

A. Excavate subsoil from areas to be further excavated or re-graded.

B. Stockpile in area designated on site. Remove excess subsoil not being reused from site.

C. Do not excavate wet subsoil.

D. Stockpile subsoil to depth not exceeding 8 feet.

3.04 EXCAVATION FOR APPURTENANCES

A. Excavate as required for appurtenances.

B. Carry excavation to firm, undisturbed soil.

END OF SECTION

SECTION 03300

CAST IN PLACE CONCRETE

PART 1 GENERAL

1.01 SECTION INCLUDES

A. This specification covers the technical requirements for furnishing, delivery, forming, placing, finishing, and curing of plain and reinforced concrete, including the fabrication and placement of reinforcing steel, and the installation of embedded items whether furnished under this specification or not, in accordance with the drawings and as specified herein.

1.02 STANDARDS AND CODES

A. The work covered by this specification shall conform to Building Code Requirements for Reinforced Concrete (ACI 318). Specifications for Structural Concrete for Buildings (ACI 301), and other referenced and related codes and standards as designated herein.

B. All specifications, standards, codes, etc., referred to are the latest edition, and together with all addenda, revisions, and supplements shall be considered part of this specification.

1.03 SUBMITTALS

A. Concrete Mix Data and Test Reports

1. Prior to any concrete placement, the Contractor shall provide the Owner with four (4) copies of the concrete mix data and test reports (trial mix data and/or field strength test) for approval. In addition, laboratory test results on the aggregate and cement shall be submitted with the mix design data. Manufacturer's literature shall also be submitted on all admixtures to be used in the concrete.

B. Working drawings - Erection drawings of reinforcing, showing dimensions, bar schedules, and details shall conform to ACI-315. Submit four (4) copies each for review and approval by Owner.

PART 2 PRODUCTS

2.01 MATERIALS

A. Portland Cement

1. Portland cement shall conform to the “Standard Specifications for Portland Cement,” ASTM C150. Type IA or Type IIA cement with air-entraining agent shall be used in all concrete except where specifically called for on the drawings.

2. Aggregates – Igneous Type

a. All aggregates, unless otherwise specified, shall conform to the Standard Specifications for Concrete Aggregate, ASTM C33. Fine aggregate shall consist of clean, washed, natural or crushed sand of uniform gradation. Coarse aggregate shall consist of washed gravel or washed crushed rock having hard, strong, durable pieces free from adherent coatings or other weak, deleterious substances.
b. Maximum size aggregate shall conform to ACI-31 8. In general, 1-1/2” maximum aggregate shall be utilized unless rebar spacing prohibits.

B. Water

1. Water for mixing concrete shall be clean and free from injurious amounts of oil, acid, alkali, organic matter, sulfates, or other substances that can adversely affect concrete strength, durability and/or chemical resistance.

C. Admixtures

1. Chemical admixtures shall be used in concrete to improve its characteristics in one or more respects, including economy, strength, durability, workability, water-tightness, drying shrinkage behavior and increased resistance to damage from cyclic freezing and thawing.

2. The selection of the admixture(s) to be used in the mix shall be based on an appropriate evaluation of its effects which shows it to be desirable for use in the particular concrete under the conditions of the use intended. The admixtures to be used shall be subject to the approval of the Engineer. Unless otherwise specified, use shall be limited to the types generally recognized as water-reducing, set-controlling, air-entraining, or combinations of these functional types.

3. Water-reducing admixtures shall conform to ASTM C94, Chemical Admixtures for Concrete, potable. High-range water reducers (super plasticizers) may be utilized.

4. Concrete shall contain an air-entraining admixture conforming to ASTM C260.

5. No other admixtures will be permitted. In particular, Calcium Chloride based compounds are specifically prohibited.

6. Contractor and contractor’s supplier are also responsible to correct for any and all synergistic effects caused by intermixing of two or more different brands of additives.

D Reinforcement

1. Metal reinforcement shall conform to the requirements of the “Standard Specifications for Billet-Steel Bars for Concrete Reinforcement”, ASTM A615, Grade 60, unless otherwise specified. All reinforcing steel shall be epoxy coated per ASTM A934.

E. Expansion Joint Filler

1. Premolded, non-extruding type, ASTM D 1751.

F. Expansion Joint Sealer

1. One component polyurethane "Sikaflex-1A" by Sika Chemical Corporation, or an approved equal.

G. Water Stops

1. Water stops shall be serrated polyvinyl chloride with center bulb similar and equal to Cat. No. RB4-316 by Vinylex Corporation, or approved equal. Size to be as indicated on drawings. All joints and splices shall be one hundred percent (100%) fused.

H. Anchor Bolts

1. Carbon steel, ASTM F 1554, with heavy hex head nuts. Bolts, nuts, and washers shall be galvanized, ASTM A 123, unless indicated otherwise on drawings.

I. Miscellaneous Embedded Steel

1. Carbon Steel, ASTM A 36.

J. Wood Sleepers

1. No. 2 Dimension Douglas Fir or West Coast Hemlock pressure treated against fire and decay using "Non-Com" by Koppers Co., Inc. or approved equal.

PART 3 EXECUTION

3.01 STORAGE OF MATERIALS

A. Cement and aggregates shall be stored in such a manner as to prevent deterioration or intrusion of foreign matter. Liquid admixtures shall be protected from freezing and from settling out of solution. Any deteriorated or damaged materials shall not be used for concrete.

PART 4 CONCRETE QUALITY

A. Concrete Strength

1. All concrete for this specification shall have a minimum 28 day compressive strength of 4,000 psi.

B. Slump

1. Slump of concrete shall be three and a half inches (3-1/2”) plus or minus one (1) inch.

2. Slump shall be measured at the discharge of the concrete mixer truck and prior to pumping.

C. Air Content

1. All concrete under this specification shall be air entrained to produce 4% air by volume. Concrete within air content greater than 6.5% will be rejected.

PART 5 CONCRETE PROPORTIONS AND CONSISTENCY

A. Concrete shall be proportioned by Method 1 or 2 of ACI 301.

B. Proportions of cement, aggregate and water for concrete shall produce the specified minimum compressive strength of 28 days. Cement quantity shall be the minimum required to achieve the specified strength. The mixture shall work readily into corners and angles of forms and around reinforcement with the method of placing employed but without permitting segregation of material or collection of free water on the surface. Water/cement ratio shall be 0.45 (max).

C. Slump tests shall be in accordance with ASTM C143. Tests shall be made by the Owner except when indicated otherwise in the project specifications.

D. All concrete for this specification shall contain entrained air.

E. All water shall be added at the batch plant. Water may not be added at the construction site unless approved by the Engineer.

PART 6 FORM WORK

A. Formwork shall conform to ACI 318 and ACI 347.

B. Wood forms for exposed surfaces of concrete shall be of plywood or other dressed wood material and shall be free from knots, warps, breaks, or other defects likely to cause irregular surfaces.

C. Metal forms shall be free from irregularities, dents and sags.

D. Form ties shall be snap-off type with ends terminating 1" below finished concrete surface. Water seal coil type shall be used in walls of water-bearing structures.

E. The contractor shall be responsible for design of formwork, safe practice in removing forms and shoring, and placing adequate reshores.

F. Chamfer Strips - A ¾" chamfer shall be provided at all exposed edges of concrete except the top horizontal edges of pump pads, curbs and piers shall be edge tooled.

G. An approved release agent shall be applied to all forms to facilitate form removal.

PART 7 REINFORCEMENT AND EMBEDMENTS

A. Fabrication and placement of reinforcing steel shall conform to ACI 318.

B. Unless otherwise indicated on the drawings, minimum concrete protection for reinforcement shall conform to ACI 318.

C. Water Stops

1. Install in all construction joints where indicated.

2. Install conforming to manufacturer's printed instructions. Take special precautions to avoid bending or displacing water stop while placing concrete around it.

D. The Contractor shall notify the Owner when reinforcement and other inserts are set and ready for inspection.

PART 8 JOINT SYSTEMS

A. Expansion Joints to be located where indicated and provide full isolation between materials.

B. Control joints shall be as indicated on the drawings. Joints shall be sawed as soon as the concrete surface is firm enough not to be torn or damaged by the blade.

C. Construction Joints

1. No construction joints shall be made in slabs, mats, walls, beams, trenches or footings unless shown on the drawings or approved in writing by the Owner.

2. Obtain Owner's approval of joints located by Contractor prior to preparation of reinforcing steel drawings. Locate joints not indicated or specified to least impair the strength of the structure.

PART 9 MIXING AND PLACING CONCRETE

Conform with ACI 301 and as specified herein.

9.1 Mixing

1. Ready-mixed concrete shall be mixed and delivered in accordance with specifications for Ready-Mixed Concrete (ASTM C 94).

2. For job-mixed concrete, the mixer shall be rotated at a speed recommended by the manufacturer. Each batch of 1 cubic yard or less shall be mixed for at least one (1) minute after all materials are in the mixer. The mixing time shall be increased fifteen (15) seconds for each cubic yard or fraction thereof. The entire batch shall be discharged before the mixer is recharged.

9.2 Conveying

1. Concrete shall be conveyed from the mixer to the place of final deposit by methods that will prevent segregation or loss of materials.

2. Equipment for chuting, pumping, and pneumatically conveying concrete shall be of such size and design as to ensure a practically continuous flow of concrete at the delivery end without segregation of materials.

9.3 Placing of Concrete

1. Concrete shall be deposited as nearly as practical in its final position to avoid segregation due to rehandling or flowing. The placing of concrete shall be carried on at such a rate that concrete is at all times plastic and flows readily into the spaces between the bars.

2. When placing is started, it shall be carried on as a continuous operation until placement of the panel or section is completed.

3. Place concrete on properly prepared and unfrozen subgrade and only in dewatered excavation and forms.

4. Use forms for all concrete except where otherwise indicated or specified.

5. Do not use concrete that has partially hardened or has been contaminated by foreign materials.

6. Prevent mud or foreign materials from entering the concrete or forms during placement operations.

9.4 Depositing

1. Place concrete in continuous horizontal lifts not to exceed 18" and place concrete against bulkheads and keyways at vertical joints.

2. Maximum free drop of concrete shall be 5 feet in walls 10 or less in thickness with 1 foot additional drop allowed for each 1” of wall thickness over 10”, with a maximum drop of 10 feet.

3. When moisture barrier is used, keep lapped joints closed and take precautions to avoid puncturing the barrier.

9.5 Consolidation of Concrete

1. Consolidate concrete as recommended by the Report of ACI Committee 609. Characteristics and application of concrete vibrators shall be as set forth in Table I of the Report.

2. Provide an adequate number of vibrators of sufficient capacity to keep up with the maximum rate of concrete placement. Keep on hand adequate standby equipment in serviceable condition.

3. Vibrate concrete only until the concrete is thoroughly consolidated and the voids filled as evidenced by the leveled appearance of the concrete at the exposed surface and the embedment of the surface aggregate.

4. Insert internal vibrators vertically to the full depth of the layer being placed and into the previous layer where not hardened. Do not drag vibrators through the concrete. Insert and withdraw slowly with the vibrator running continuously so that no hole will be left in the concrete. Avoid flow of concrete from one location to another by use of a vibrator.

5. Consolidate concrete layer to full depth when using a surface vibrator. Use thinner layers or more powerful vibrator if necessary to achieve complete consolidation.

6. Use form vibrators only where sections are too thin or where sections are inaccessible for internal vibrators.

9.6 Protection

1. Unless adequate protection is provided and acceptance is obtained, concrete shall not be placed during rain, sleet or snow.

2. Spray Confilm, as manufactured by Master Builders, over the surface of the concrete immediately after screeding and or bull floating to reduce rapid evaporation of the free water. Apply per manufacturer's written instructions.

9.7 Hot-Weather Concreting

1. Conform to ACI 305 when temperature is 90°F or above, or is likely to rise above 90°F within the 72 hour period after placing.

2. Concrete shall have an in-place temperature of 85°F or lower.

3. Cool concrete by shading and water fogging for a minimum period of 24 hours, starting immediately after placing.

9.8 Cold-Weather Concreting

1. Conform with ACI 306 when temperature is below 40°F or is likely to fall below 40°F during the 72 hour period after placing.

2. Do not expose fresh concrete to carbon monoxide or carbon dioxide fumes from heaters or engines. Concrete with carbonation shall be repaired or replaced at the contractor's s expense.

3. Place concrete at temperatures recommended in Table 1 of ACI 306.

9.9 Time Requirements

1. Place concrete at a sufficient rate to assure that lifts below have not taken initial set before concrete is deposited. Settlement shrinkage shall have occurred prior to placing subsequent lifts.

2. Place concrete within forty five (45) minutes after mixing, except that this period may be extended to ninety (90) minutes (maximum) if weather conditions are favorable, concrete temperatures have not exceeded specified limits, significant slump loss has not occurred, and the Owner concurs.

PART 10 FINISHES

10.1 General

1. Remove fins and burrs and patch voids on irregularities in all exposed vertical surfaces.

2. Tie holes shall be patched by applying water to saturate the concrete, apply mortar with hammer and ramming rod flush with surface, and rub to finish.

10.2 Slabs

1. Finishing of concrete floors and slabs shall be in accordance with ACI 302. In general, surface of slabs shall be brought to proper level by screeding followed immediately with a wooden bull float. Bull float shall be used only to level the surface, not to close the surface. Bull floating must be completed before any excess water or bleeding water is present at the surface.

   A slight stiffening of concrete with no bleed water present is necessary before proceeding further. When the concrete will bear the weight of a man with a maximum 1/4" indentation, the concrete shall be floated by hand or by a trowel machine outfitted with float shoes. Finish surface with one pass of a flat steel trowel followed by a light broom finish in the direction of the slope of the slab.

2. Screed level and wood float surface of all equipment pads.

PART 11 CURING AND PROTECTION

11.1 Curing of Concrete

Cure all concrete by the following methods, unless approved otherwise by the Engineer. Curing method shall begin as soon as the surface of the concrete will not be marred by its operation.

1. Leaving in forms for a minimum of seven (7) days. Keep formwork wet to prevent drying of concrete surfaces. Exposed surfaces shall be kept continuously wet.

2. Newly placed concrete shall be kept wet by the continuous application of water with a nozzle, soakers, or wet burlap for the first seven (7) days after the concrete has been placed. Alternatively, use polyethylene sheets applied in full contact with surfaces, and maintain the concrete surfaces wet in an approved manner for a minimum of seven (7) days. This curing water shall be clean and free of contaminating substances that would discolor the concrete.

   Upon approval of the Civil Engineer, the concrete may be dewatered after three (3) days and a membrane curing compound, conforming to ASTM C 309, applied before the concrete surface is dry. The curing compound shall have a fugitive dye and shall be applied according to the manufacturer's written instructions.

3. The curing methods recommended in ACI 305 and ACI 306 shall be followed for concrete placed during hot or cold weather, except that a membrane curing compound shall not be used for hot weather concrete.

PART 12 CONCRETE TEST AND INSPECTION

12.1 General

1. The Contractor shall employ and pay for services of the independent testing laboratory for tests required to show compliance with the specifications. Test results shall be submitted directly to the Owner Site Representative. Selection of the testing laboratory is subject to approval of the Owner Site Representative.

2. Tests required by the Contractor or his supplier which are necessary to check conformity to the specifications are the responsibility of the Contractor and/or his suppliers.

3. Materials and operations shall be tested and inspected as work progresses. Failure to detect defective work shall not prevent nor inhibit rejection when defect is discovered, nor shall it obligate the Owner for final acceptance.

4. Testing agencies shall meet the requirements of "Recommended Practice for Inspection and Testing Agencies for Concrete and Steel in Construction ASTM E-329-77.

12.2 Tests

1. Fresh concrete will be sampled from each concrete supplier on a daily basis. One strength test, consisting of five (5) test cylinders shall be made from each 50 cubic yards of concrete, or where a days pour does not amount to 50 cubic yards. One cylinder of each set will be broken at the age of seven (7) days, one cylinder at fourteen (14) days, two at twenty eight (28) days and one at forty five (45) days. Samples from which compression test specimens are molded shall be secured in accordance with ASTM C 172.

2. For each strength sample made, slump, air content, fresh-unit weight and concrete

temperature will be tested from the same concrete truck. In addition, temperature, air content and slump will be tested regularly to ensure conformance with the specification.

3. Compression test specimens shall be made in accordance with ASTM C 31. Specimens taken to the laboratory for curing will be cured in accordance with ASTM C192. Specimens will be tested in accordance with ASTM C 39.

4. If the average strength of the 28 day test cylinders fall below the required strength, further test samples (taken by the Contractor) may be required by the Owner before the structure will be accepted.

5. Core drilling and testing, if required, will be performed by the Owner in accordance with ASTM C 42 at the expense of the Contractor unless the tests indicate satisfactory construction.

6. The Contractor shall provide and maintain for the use of the Owner's testing agency adequate facilities for proper curing of concrete specimens on -the project in accordance with Method of Making and Curing Concrete Test Specimens in the Field, ASTM C 31.

7. The Contractor shall provide the Owner with batching tickets from each and every truck. The following information shall be shown:

    1. Truck Number
    2. Ticket number
    3. Time batched
    4. Time arrived on job site
    5. Amount of rock, sand, cement, admixtures and total water
    6. Mix number

8. The Owner's Quality Control Technician will advise the Owner of any and all noncompliance by the Contractor.

END OF SECTION

SECTION 05120

STRUCTURAL STEEL

PART 1 GENERAL

1.01 SCOPE

A. This specification establishes requirements for detailing, furnishing, fabricating and erecting structural steel framing and miscellaneous steel. Structural and miscellaneous steel includes all items listed in Section 2.0 Classification of Materials, of AISC code.

1.02 ATTACHMENTS

A. The following attachments form an integral part of this specification:

1. Specification 9900 - Paints and Coatings

1.03 CODES, SPECIFICATIONS AND REFERENCES

A. Codes and Specifications -- The detailing, fabrication and erection of structural steel framing shall comply with the latest edition of codes and specifications listed below. Any conflicts between this specification, drawings, and codes shall be brought to Owner's attention. The conflict shall be resolved in writing before work begins.

1. AWS Code – "Structural Welding Code-Steel AWS D1.1," by the American Welding Society.

2. AISC Code – "Code of Standard Practice for Steel Buildings and Bridges," by the American Institute of Steel Construction.

3. AISC Specification – "Specification for the Design, Fabrication and Erection of Structural Steel for Buildings, by the American Institute of Steel Construction.

4. Research Council on Structural Connections Specification "Specification for Structural Joints Using ASTM A325 or A490 Bolts," by the Research Council on Riveted and Bolted Structural Joints of the Engineering Foundation.

B. References -- The following are referred to elsewhere in this specification or in the above codes and specifications:

1. AISC Manual – "Manual of Steel Construction," by the American Institute of Steel Construction.

2. ASTM Standards – "ASTM Standards," by the American Society for Testing and Materials.

3. ANSI Standards – "American National Standards," by the American National Standards Institute.

C. Design Requirements

1. Substitution of Members — If section designated on drawings cannot be obtained, Contractor may make substitution only after receiving Owner's approval in writing. Substitution shall be section of at least equal strength and shall conform to design requirements.

2. Connections -- The following provisions shall apply to all members except bracings:

    a. If beam reactions are not shown on drawings, design the connections to support one half the total uniform load capacity shown in the Allowable Uniform Load Tables in the AISC Manual, for the given shape, span and specified grade of steel. Generally, one-sided connections shall not be used.

    b. Design the connections without increase in allowable unit stresses. Minimum connection design force shall be equal to the capacity of two 3/4 in. diameter ASTM A325 high strength bolts in single shear.

    c. Design all gusset plates and clip angles of beams subjected to direct tension for the axial load shown on the drawings. Gusset plates and clip angles shall have a minimum thickness of 5/16 in. unless otherwise noted on drawings.

3. Bracing Connections -- The following provisions shall apply to all bracing members:

    a. If axial bracing loads or connection requirements are not shown on the drawings, minimum bracing connection design force shall be equal to the capacity of two 3/4 in. diameter ASTM A325 high strength bolts in single shear. Design the connections without increase in allowable stresses.

    b. Design all gusset plates, clip angles and connecting plates of members subjected to direct tension/compression for the axial load shown on the drawings or the capacity of the connections if forces are omitted. Gusset plates and clip angles shall have a minimum thickness of 5/16 in. unless otherwise noted on drawings.

4. Bolted Joints -- Bolted joint details shall conform to requirements of the Research Council Specification on Structural Connections.

    a. Main Connections – Use ASTM A325 high strength bolts.

    b. Secondary Connections - Use ASTM A307 unfinished bolts for connection of secondary members such as purlins and girts unless designated otherwise.

    c. Welded Joints — Welded joint details shall conform to the requirements of AWS Code Dl.1.

D.. Drawings

1. Shop Detail Drawings -- Vendor shall furnish completed and checked Shop Detail Drawings. Each drawing shall be referenced to the related Structural Design Drawing. Original tracings of shop detail drawings shall become the Owner’s property.

2. Erection Drawings -- Vendor shall furnish completed and checked Erection Drawings. Each drawing shall be referenced to the related Structural Design Drawing. Where field welding is required, show on Erection Drawings the type, size and amount. Vendor shall furnish list showing the types, diameter, length and placement of field bolting. Original Erection Drawings shall become the Owner’s property.

3. Submittals — The following indicates the number of sets of drawings to be furnished by contractor.

    a. Contractor shall prepare and submit four (4) prints of all shop details drawings for all structural and miscellaneous steel to Owner for approval prior to fabrication. In general,

two (2) prints will be returned to the contractor marked either “Approved as Noted” or “Resubmit for Approval.” One (1) approved set of prints will be sent to the site representative.

b. The contractor shall submit either the originals or mylar sepias of all shop drawings at the end of construction for owner records. This final submittal shall reflect all changes requested by owner on the approval drawings. In addition, all “as built” conditions shall be reflected on the final drawings.

PART 2 PRODUCTS

2.01 MATERIALS

A. Contractor shall supply materials designated, or equal. Materials shall meet the following requirements, unless designated otherwise on the drawings.

B. Structural Steel W and WT Shapes -- ASTM A992

C. Structural Steel Other shapes, Plates and Bars -- ASTM A36.

D. Grating— For floors or stair treads, welded steel, sized per drawings, with serrated bearing bars and twisted cross bars unless otherwise indicated on drawings.

E. Handrail

1. Pipe Handrail -- 1.25 in. (1.5 in. nominal OD.) standard weight carbon steel pipe, ASTM A53 Grade B. with 1/4 in. thick steel toe plate (see drawings for depth).

2. Angle Handrail -- 2.5 in. by 2.5 in. by 1/4 in., ASTM A36, welded construction, with 1/4 in. thick steel toe plate (see drawings for depth).

F. Door Frames - ASTM A36 steel unless otherwise indicated on drawings.

G. Pipe Ladders - ASTM A53 Grade B standard weight pipe, sizes per drawings.

H. Bolting Materials - Use the type of bolting specified on drawings, and as follows:

1. High Strength -- Tempered carbon steel high strength bolts, ASTM A325, with hardened washers, under rotating part of nut and bolt assembly. Galvanized nuts shall be ASTM A563 Grade DH or ASTM Al 94 Grade 2H.

2. Unfinished Bolts -- Low carbon steel nuts and bolts, ASTM A307. Washers are required.

3. Countersunk Flat Head Bolts -- ASTM A307, ANSI B1 8.5.

4. Headed Stud-Type Shear Connectors -- ASTM A108, Grade 1015 or 1020 with a minimum tensile strength of 60,000 psi.

5. Fasteners For Grating -- Fabco/H-3 stainless steel structural fasteners, No. 14 diameter with Style #1 Weath-R-Seal stainless steel washers, both by Fabricated Products Div., Townsend Co. Assemble with stainless steel saddle clips.

6. Concrete Anchors -- Heavy Duty Anchors by HILTI or Red Head.

I. Nonmetallic Shrinkage-Resistant Grout -- Use one of the following, unless otherwise noted on

the drawings, or equal:

1. Five Star Epoxy Grout by Five Start Products, Inc. (preferred).

2. “MASTERFLOW 713” or “MASTERFLQW 928” by MASTER BUILDERS

K. Statements and Reports -- Upon request of owner, vendor shall supply certified statements or copies of mill test reports for specified materials, which are required to conform to indicated ASTM or other standard specifications.

PART 3 EXECUTION

3.01 FABRICATION

A. General — Fabricate all steel for delivery sequence that will expedite erection and minimize field handling of materials. Contractor may utilize shop welded frame construction or field bolted construction at his option, however, all field connections shall be bolted.

B. Marking — All members shall be clearly marked, and erection drawings shall be furnished showing clearly the location of all members for ease in erection.

C. Shop Assembly - Items shall be completely shop assembled, where practicable, ready for field erection. Assemble and weld built-up sections by methods that will produce true alignment of axes without warp. All steel shall be galvanized after fabrication is completed. Welding of units shall be completed before galvanizing starts.

D. Columns - Finish bearing ends to allow full bearing on entire cross-sectional area of member at both column splice and base plate.

E. Handrails - Dimensions and detailing of handrails shall be as shown on standard detail drawings. Perform all welded construction unless indicated otherwise on drawings. Remove all weld spatter, and grind all welds, metal projections and sharp edges to a smooth contour. Use post mounting method designated on drawings.

1. All corner turns for pipe handrail shall be made by bending, except that acute angles of pipe handrail shall be made by mitering. All corner turns of angle handrail shall be made by mitering. Set posts plumb within 1/8 in. of vertical and fasten to stair stringers and/or platform framing. Set longitudinal members parallel with each other and with floor or stair stringers to within 1/8 in. each 10 ft.

2. Field Joints — All pipe handrail joints have been field seal welded. Comply with the following requirements:

   a. Use materials and methods that minimize distortion and develop strength and corrosion resistance of base metals.

   b. Obtain fusion without undercut or overlap, and remove welding flux immediately.

   c. At exposed connections, finish exposed welds and surfaces smooth and blended so that no roughness shows after finishing, and welded surface matches contours of adjoining surfaces.

F. Connections -- Shop-weld or field-bolt connections, unless designated otherwise on drawings.

G. Welding — Shall follow the AWS Code – "Structural Welding Code-Steel AWS D1.1," by the American Welding Society.

H. Tubes & Pipes — All galvanized pipe and tube sections shall have vent holes.

1. All bolts shall be galvanized.

2. Refer to attached project coating schedule for coating requirements.

3.02.DELIVERY, STORAGE, & HANDLING

A. Delivery - Deliver materials to site at such intervals to ensure uninterrupted progress of work.

B. Storage - Structural material, either plain or fabricated, shall be stored above the ground upon skids, blocking or other supports. Material shall be free from dirt, grease and other foreign matter.

C. Handling - Care shall be taken during handling and erection to prevent damage to connections, attachments, and to minimize damage to finished paint. Any damaged paint or galvanized surfaces shall be repaired as per touchup section of attached coating specifications.

3.03 ERECTION

A. General -- Any special instructions noted on Structural Design Drawings shall be followed during erection.

B. Temporary Bracing and Supports -- Provide and maintain temporary bracing as required to develop structural integrity during erection. Remove such bracing upon completion of work.

C. Bolting -- Installation, tension control, type of equipment used and inspection methods shall conform to Research Council On Structural Connections Specification. Bolting materials shall be high strength type unless other types are permitted by drawings or by this specification. Bolts identified on the drawings as slip critical or direct-tension shall be installed by “turn of the nut” method, all other bolts shall be brought to a “snug-tight condition only.

D. Field Welding and Cutting — Field welding shall be per design drawings only. Gas blowing and reaming shall not be permitted for making holes, all holes shall be drilled. Cutting or welding to correct fabrication errors shall be done only with consent of Owner.

E. Anchor Bolts — Anchor bolts will be furnished and installed by concrete contractor.

F. Framing -- Erect framing plumb and true. Connect securely all work as erection progresses, providing for all wind and erection stresses and dead and live loads.

G. Columns — Columns shall be plumb within the tolerance listed in AISC Code, and there shall be uniform bearing pressure under the base plates.

1. Columns shall be set with their base plates fully seated on leveling plates.

2. Columns may be set without leveling plates by shimming and grouting base plates.

H. Milled-End Compression Members - Connect splices only when contact surfaces are fully seated and secured in complete contact.

I. Floor Grating

1 Installation -- Fasten grating with stainless steel fasteners and stainless steel saddle clips. Fasteners shall be provided two per panel at each supporting member.

2. Openings -- All openings in grating shall be banded prior to application of coating.

J. Touch-up Painting – Refer to project painting specifications.

3.04 QUALITY CONTROL

A. Inspection -- Material and workmanship are subject to inspection in mill, shop and field by qualified inspectors supplied by Owner. Failure of Owner to reject defective material or inferior workmanship does not absolve Contractor's responsibility.

B. Provide access for testing agency to places where structural steel work is being fabricated or produced so that required inspection and testing can be performed.

C. Correct deficiencies in structural and/or miscellaneous steel work that inspections and laboratory tests reports have indicated to be not in compliance with requirements. Perform additional tests, at contractor's expense, as necessary to reconfirm any noncompliance of original work and to show compliance of corrected work.

END OF SECTION

SECTION 09900

PAINT AND COATINGS

PART 1 GENERAL

1.01 SECTION INCLUDES

A. The contractor shall provide all labor, material, tools, equipment and supervision as required to complete all work as indicated in this section.

B. Work shall include all surface preparation, cleaning and painting, including touch up. Contractor is also responsible for protection of newly painted surfaces during transportation and installation. *The contractor in conformance with this specification shall touch up damaged surfaces.*

1. Material - The contractor shall furnish all materials.

2. Shop Painting - All new steel shall be shop painted. Field painting of new steel shall be limited to touch up as required.

3. Manufacturer's Instructions and Recommendations - The contractor shall be familiar with the manufacturer's instructions as to the surface preparation and installation of all paint. He shall comply with all manufacturers' recommendations. Paint applied contrary to instructions shall be removed, the surface shall be re-prepared and new paint installed at no cost to owner.

   If the contractor chooses a comparative product by a manufacturer other than those listed under Section 2, he shall submit all pertinent product data to owner site representative prior to starting work. He may not apply any paint until he receives approval from Owner's site representative.

PART 2 PRODUCTS

2.01 MATERIALS

A. Materials to be used shall comply with one of the following approved paint systems. It should be noted that owner's site representative might substitute comparative products by other manufacturers only with prior approval.

	Devoe
Epoxy Primer	Bar-Rust 235 (Buff Color)
Epoxy Intermediate Coat	Bar-Rust 235(Off White)
Aliphatic Urethane Finish Coat	Devthane 379 High Build Gloss

B. Color - The finish coat color shall be as specified below:

Structural and Miscellaneous Steel	Clay Tan
Handrail and Toe Plate	Safety Yellow

Color Standards	**Devoe**
Clay Tan	#1600
Safety Yellow	#9400

PART 3 EXECUTION

3.01 GENERAL

A. This system includes an epoxy primer followed by an epoxy polyamide intermediate coat and an aliphatic urethane finish coat. The system exhibits a durable high gloss finish with excellent chemical resistance.

B. All coats shall be uniformly applied in a workmanlike manner. Paint shall be thoroughly mixed and applied in accordance with the manufacturer's instructions. Each coat shall be evenly applied free from runs, sags, pinholes and other defects. Successive coats shall be of different colors to facilitate inspection.

C. Film imperfections such as "orange peel" and "dry over-spray" are unacceptable and shall be corrected at no cost to owner.

D. All work shall be done with spray equipment, roller or brush as recommended by the manufacturer

1. Surface Preparation - Prepare surface by sandblasting to near-white metal (SSPC-SP 10).

2. Primer - Priming (1 coat) shall be done immediately after cleaning while the prepared surface is free of dust and other contaminants. The allowable time between cleaning and painting shall be determined by the humidity, cleanliness, etc., of the area. Good judgment shall be used.

   The dry film thickness of the primer coat shall be 2.5 to 3.5 mils.

   Allow a 12-hour cure time before applying the intermediate coat.

3. Intermediate Coat - Apply a polyamide cured epoxy intermediate coat consisting of one coat applied in multiple passes to yield a minimum thickness of 4 mils dry.

   Allow a 12-hour cure time before applying the finish coat

4. Finish Coat - Apply a one-coat aliphatic finish coat consisting of multiple passes to yield 1 1/2 to 2 mils dry.

5. Touch Up - After erection of steel the contractor shall power tool clean, prime and touch up all unpainted, burned and damaged areas. Oil and grease shall first be removed per solvent cleaning SSPC-SP 1.

   Clean all surfaces per SSPC-SP 3 (Power Tool Cleaning). Surface shall not be burnished smooth. The profile depth shall be 1 1/2 to 2 mils.

   Apply one coat of epoxy primer immediately after cleaning. The minimum dry thickness shall be 3 mils dry.

   Intermediate coat application and film thickness shall be the same as for parts 3.D.3 and 3.D.4 above.

3.02 INSPECTION

A. Notification - Contractor shall notify the owner site representative or his designate after surface preparation and before the application of each successive coat of paint. Contractor shall allow for inspection of the surface preparation and each coat of paint.

B. Paint Thickness - The paint thickness shall be measured by a magnetic instrument approved by owner or by another appropriate instrument approved by owner.

END OF SECTION

SECTION 11305

PROCESS EQUIPMENT

PART 1 GENERAL

1.1 SECTION INCLUDES

A. Knock-out pots.

B. Knock-out pot pump and motors.

C. Sump pump and motor.

1.2 SECTION DESCRIPTION

A. This Section is intended for use for miscellaneous process equipment that is not specified in stand-alone Sections.

1.3 PROGRESS SUBMITTALS

A. Shop Drawings: Indicate layout, general assembly, components, dimensions, weights, clearances required, and methods of assembly. List any exclusions or exceptions to the Specifications and list operating limitations such as minimum or maximum speed, minimum output, maximum duty cycle, pressure rating, temperature rating, cooling requirements, chemical resistance and other pertinent data.

B. Product Data: Provide manufacturer's literature including assembly, performance data, and characteristics, controls, wiring diagrams, electrical load requirements, and connection details.

C. Test Reports: Indicate shop test data.

D. Manufacturer's Certificate: Certify that products meet or exceed specified requirements at specified operating conditions.

E. Manufacturer's Instructions: Indicate installation instructions and requirements. Include instructions for storing, handling, preparation, setup, and adjustment of product.

F. Manufacturer's Field Reports: Indicate if products are installed correctly and report operating conditions, motor voltage/amperage, and performance. Report deficiencies to be corrected by CONTRACTOR.

1.4 CLOSEOUT SUBMITTALS

A. Section 01700 – Closeout Procedures.

B. Record Documents: Indicate final location of equipment and components.

C. Operation and Maintenance Data: Indicate operating instructions, maintenance instructions and procedures, and parts lists including recommended spare parts. Provide six complete copies of the operating and maintenance instructions, including parts lists for all of the equipment. One copy to be single sided for production of additional operation and maintenance manuals. Bind material in sections in hard backed binders.

D. Warranties: Complete warranty forms in OWNER's name and register warranty. Provide 1 year manufacturer's warranty for the system.

1.5 QUALIFICATIONS

A. Manufacturer: Company specializing in manufacturing the products specified in this Section with minimum three years documented experience.

B. Installer: Company specializing in performing the work of this Section with minimum five years documented experience.

1.6 DELIVERY, STORAGE, AND HANDLING

A. Section 01610 - Product Requirements: Product delivery, storage, and handling.

B. Accept equipment on the Site in factory containers. Inspect for damage.

C. Store in clean and dry area. Protect from excessive heat or cold.

1.7 SYSTEM STARTUP AND COMMISSIONING

A. Start-up and commissioning services can be requested by the OWNER at any time, and the CONTRACTOR or equipment supplier must be capable of supplying this service.

B. Site commissioning services include:

1. Inspecting the installation and certification that installations and connections are satisfactory.

2. Inspecting the interior of the units to ensure they are clear and clean.

3. Checking that field painting of items primed in the shop has been carried out to the satisfaction of manufacturer, and that items finish painted in the shop have been touched up as required.

4. Supervising the startup of equipment.

5. Checking controls and instrumentation. Completion of calibration and adjustments.

6. Check to ensure correct installation, lubrication, drive alignment, rotation, and voltage before startup.

C. Service technicians shall be equipped with necessary equipment including signal generators and pressure calibration kits to verify the setup of controls and instrumentation.

D. Provide a detailed written report advising the results of Site inspection, startup, and process checking, with numerical data to support the latter.

E. Spare parts are not required, but Supplier shall provide a list of recommended spare parts, complete with prices.

PART 2 PRODUCTS

2.1 KNOCK-OUT POTS

A. Knock-out pots to remove liquids and solid particulates from process air streams, as manufactured by MK Environmental or equal.

B. Equipment Tag Numbers: KOP-No.1, KOP-No.2.

C. Capacity: 600 cfm

D. Model: AWS-1

1. Carbon steel housing.

2. Inlet filter assembly.

3. Sight glass.

4. 300 gallon tank.

5. 1 1/2-inch outlet flanged connections (water).

6. 6-inch inlet and outlet flanged connections (air).

7. Three (3) ¾-inch NPT connections for low, high and high level switches.

E. Products:

1. Groundwater and air with VOCs.

F. Miscellaneous:

1. Supply knock-out pots with vortex breaker on liquid discharge nozzles.

2.2 KNOCK-OUT POT PUMP

A. Knock-out pot pump, as manufactured by Moyno or equal.

B. Performance:

1. Flow: 15 gpm.

2. Total Dynamic Head: 20 psi.

3. Model: 356.

4. Speed - Maximum: 1,725 rpm.

D. Operating Conditions:

1. Liquid: Water.

2. Specific Gravity: 1.0.

Pump Motor: 460 volt, 3-phase. Motor to be specified per Division 16 – Electrical

2.3 SUMP PUMP

A. Sump pump, as manufactured by Goulds or equal.

B. Performance of P-200 (Treatment Facility Sump Pump):

1. Flow: 50 gpm.

2. Total Dynamic Head: 30 feet.

3. Model: 3885.

4. Speed - Maximum: 3,500 rpm.

C. Operating Conditions:

1. Liquid: Water.

2. Specific Gravity: 1.0.

D. Pump Motor: 460 volt, 3-phase. Motor to be specified per Division 16 – Electrical.

PART 3 EXECUTION

3.1 EXAMINATION

A. Section 01700 - Execution Requirements: Examination.

B. Verify that surfaces and the Site conditions are ready to receive work.

3.2 INSTALLATION

A. Install in accordance with manufacturer's instructions and as shown on the Drawings.

B. Provide clearance around equipment as specified or as required by manufacturer.

C. Support piping or electrical work adjacent to equipment so that no load is carried by equipment.

3.3 FIELD QUALITY CONTROL

A. Section 01400 - Quality Requirements: Quality control.

B. Hydrostatically test tanks after installation.

3.4 ADJUSTING

A. Adjust each item of equipment to operate smoothly and effectively as directed by ENGINEER.

B. Balance flow rates, adjust speed, gage needles, switch settings, belt tension alignment, stops on valves, relief valve settings, pressure regulators, etc.

3.5 PROTECTION OF FINISHED WORK

A. Section 01700 - Execution Requirements: Protection of installed construction.

B. Protect finished work from construction activities.

3.6 DEMONSTRATION

A. Section 01700 – Closeout Procedures: Demonstration and training.

END OF SECTION

SECTION 11376

BLOWERS

PART 1 GENERAL

1.1 SECTION INCLUDES

A. Air Sparge blowers and motors.

B. SVE blowers and motor.

C. Blower accessories.

1.2 PROGRESS SUBMITTALS

A. Shop Drawings: Indicate outline dimensions, general assembly, components, operating data, system drawings, materials of construction, and wiring diagrams.

B. Product Data: Include engineering data and electrical characteristics.

C. Test Reports: Include performance curves, and head loss curves.

D. Manufacturer's Certificates: Certify that products meet or exceed specified requirements.

E. Manufacturer's Instructions: Include instructions for storing, handling, preparation, installation, setup, and adjustment of products.

F. Manufacturer's Field Reports: State that equipment has been installed in accordance with the manufacturer's requirements.

1.3 CLOSEOUT SUBMITTALS

A. Section 01700 – Closeout Procedures.

B. Record Documents: Indicate actual locations of equipment. Indicate amps and voltage on each phase at startup.

C. Operation and Maintenance Data: Indicate operation, maintenance, and parts lists including list of recommended spare parts. Provide six complete copies of the operating and maintenance instructions, including parts lists for all of the equipment. One copy to be single sided for production of additional operation and maintenance manuals. Bind material in sections in hard backed binders.

D. Warranties: Completed original warranty forms filled out in OWNER's name and registered with manufacturer. Provide one year manufacturer's warranty for metals, blowers, and seals.

1.4 DELIVERY, STORAGE, AND HANDLING

A. Section 01610 - Product Requirements: Product delivery, storage, and handling.

B. Accept equipment on the Site in factory containers. Inspect for damage.

C. Store in a clean and dry area. Protect from excessive heat and cold. Ventilate to prevent condensation.

PART 2 PRODUCTS

2.1 AIR SPARGE BLOWER

A. Blower, as manufactured by HSI or equal.

B. Equipment Name: Sparge Blower No. 1 and No. 2.

C. Description: HST HT-50 High Speed Turbo Blower Package, a pre-assembled working unit and contains the following

1. Model: HT-50.
2. Motor: 50 HP, 460/3/60 Motor IP 45/54.
3. Electrical Enclosure: UL/ULC – Nema 12 Rated Electrical Enclosure.
4. Motor Starter: VFD Starter w/Disconnect.
5. Controller: Programmable Logic Controller with touch screen HMI interface.
6. Airend: (1 or 2) impellers mounted on a single shaft, supported by air foil bearings in an integral steel casing.
7. Pressure relief with silencer.
8. Sound enclosure: Heavy duty steel I-beam construction with fork lift access.
9. Paint: Powder coated with two coat epoxy paint.
10. Noise: Less than 85dBA per OSHA standards.
11. Discharge: 6-inch check valve, 6” expansion joint, and 6” butterfly valve.
12. 2” modulating blow-off valve with 4-20mA actuator and silencer, analog output card and plc programming.
13. Maximum noise levels at outside wall of facility not to exceed 85 dB. Blower enclosure needs to be provided if sound level exceeds 85 dB.

D. Performance:

1. Flow: 400 cfm at 15 psig discharge pressure.
2. Model: HT-50.

E. Blower Motor:

1. 50 hp, 460 volt, 3-phase
2. Motor to be specified per Division 16 – Electrical.

F. Blower Accessories:

1. Inlet silencer as manufactured by Universal model SU5-12 or approved equal.

2.2 SVE BLOWER

A. Blower, as manufactured by HSI or equal.

B. Equipment Name: SVE Blower No. 1 and No. 2.

C. Description: New 05204 Mulitstage Centrifugal Blower, skid mounted with coupling and coupling guard:

1. Model: 05204.

2. Motor: 15 HP, 460/3/60.

3. Impeller diameter: 22-inch.

4. Casing: Cast iron ASTM A48 grade 25/30.

5. Bearing Cap and Housing: Cast iron ASTM A48 grade 25/30.

6. Shaft: Carbon steel

7. Impellers: Cast aluminum.

8. Seals: Cast iron ASTM A48 grade 30 with lead babbitt insert zinc-alloy, ZA-12

D. Performance:

1. Flow: 600 cfm.

2. Vacuum: 80 in. w.c..

3. Model: 5204

E. Blower Motor:

1. 15 hp, 460 volt, 3-phase, 3550 rpm.

2. Motor to be specified per Division 16 – Electrical.

F. Blower Accessories:

1. Discharge exhaust silencer as manufactured by Universal model SU5-12 or approved equal.

PART 3 EXECUTION

3.1 INSTALLATION

A. The blowers shall be installed by qualified tradesmen having experience in the installation of this type of equipment.

B. Install in accordance with the manufacturer's recommendations. Mount blowers as shown on the Drawings. Where used, anchor bolt size and material shall be as shown in reviewed manufacturer's shop drawings. Bolts shall be accurately placed with templates. Coat bolt thread projections with lubricant to facilitate future nut removal.

C. All strain from attached piping shall be eliminated from the blowers and any evidence of blower or driver misalignment, noisy operation, or other signs of improper setting shall be corrected by CONTRACTOR.

3.2 FIELD TESTS

A. Functional Test: Prior to facility startup, all equipment shall be inspected for proper alignment, operation, connection, and satisfactory performance by means of a functional test.

B. Performance Test: Prior to acceptance of the installed blower, demonstrate proper operation of the blower at the guarantee point, at which time data shall be recorded on the total head, capacity, and power requirements of the pump. Driving motor voltage and amperage to be measured for each phase.

C. Testing Equipment: Furnish all instruments and labor as required for this procedure.

D. Test Failure: A unit failing the performance test shall be realigned and retested. If a blower fails the second test, the unit will be rejected and CONTRACTOR shall furnish a unit that will perform as specified.

END OF SECTION

SECTION 13121

PRE-ENGINEERED BUILDING

PART 1 GENERAL

This specification establishes requirements for the design, fabrication and installation of a pre-engineered metal building including doors, and louvers. The erection of the building shall comply with the latest edition of all codes and specifications, and most stringent criteria.

1.1 SECTION INCLUDES

A. Pre-engineered, shop-fabricated, primed and painted structural steel building frame.

B. Pre-finished insulated metal wall and sloped roof system including gutters and downspouts, and flashing and sealant for penetrations.

C. Louvers, exterior door, and overhead coiling door, with hardware.

1.2 REFERENCES

A. American Institute of Steel Construction, Inc. (AISC):

1. Code of Standard Practice for Steel Buildings and Bridges.

2. Manual of Steel Construction.

3. Specification for Structural Steel for Buildings - Allowable Stress Design and Plastic Design.

4. Quality Certification Program, Category MB.

B. American Society for Testing and Materials (ASTM):

1. A36/A36M - Standard Specification for Carbon Structural Steel.

2. A153/A153M - Standard Specification for Zinc Coating (Hot-Dip) on Iron and Steel Hardware.

3. A307 - Standard Specification for Carbon Steel Bolts and Studs, 60,000 psi Tensile Strength.

4. A325 - Standard Specification for Structural Bolts, Steel, Heat Treated, 120/105 ksi Minimum Tensile Strength.

5. A490 - Standard Specification for Heat Treated Steel Structural Bolts, 150 ksi Minimum Tensile Strength.

6. A500 - Standard Specification for Cold-Formed Welded and Seamless Carbon Steel Structural Tubing in Rounds and Shapes.

7. A501 - Standard Specification for Hot-Formed Welded and Seamless Carbon Steel Structural Tubing.

8. A529/A529M - Standard Specification for High-Strength Carbon-Manganese Steel of Structural Quality.

9. A653/A653M - Standard Specification for Steel Sheet, Zinc-Coated (Galvanized) or Zinc-Iron Alloy-Coated (Galvannealed) by the Hot-Dip Process.

10. A792/A792M - Standard Specification for Steel Sheet, 55% Aluminum-Zinc Alloy-Coated by the Hot-Dip Process.

11. C1107 - Standard Specification for Packaged Dry, Hydraulic-Cement Grout (Nonshrink).

C. American Welding Society, Inc. (AWS):

1. A2.4 - Standard Welding Symbols.

2. D1.1 - Structural Welding Code - Steel.

D. Metal Building Manufacturer's Association (MBMA):

1. Metal Building Systems Manual.

2. Low Rise Building Systems Manual.

1.3 DEFINITIONS

A. Auxiliary Load: Dynamic live load such as a crane, or material handling system.

B. Collateral Load: Additional dead load, other than the weight of the metal building system, such as sprinklers, electrical systems, floors, ceiling, and mechanical piping or systems.

C. Rigid Frame: A structural framework in which columns and beams are rigidly connected together without hinged joints. The frame is stable with respect to design loads and does not need bracing in the plane of frame.

D. Sandwich Panel: A panel assembly used as a building covering consisting of insulated cover material between inner and outer metal skins.

1.4 PROGRESS SUBMITTALS

A. Design Calculations: Indicate governing building code and structural loads. Furnish detailed design calculations for the building superstructure including foundation reactions signed and sealed by a licensed professional structural engineer.

B. Shop Drawings: Indicate assembly dimensions, elevations, locations, sizes and steel grades of structural members, connections, attachments, openings, cambers, and loads; wall and roof system dimensions, panel layout, general construction details, anchorages and method of anchorage; framing base plate and anchor bolt settings, sizes, and locations from datum, and foundation loads; indicate welded connections with AWS A2.4 welding symbols; indicate net weld lengths; provide professional seal and signature of structural engineer licensed in the state of Indiana.

C. Erection Drawings: Indicate members by label, assembly sequence, and temporary erection bracing.

D. Product Data: Include for profiles, component dimensions, anchor bolts, and fasteners.

E. Samples: Submit 2 samples of precoated metal panels for each color selected, 6 by 6 inch in size, illustrating color and texture of finish.

F. Mill Test Reports: Submit test reports on metal material if requested by ENGINEER.

G. Manufacturer's Certificates: Certify that products meet or exceed specified requirements.

H. Welders Certificates: Certify welders employed on the Works, verifying AWS qualification within the previous 12 months.

I. Manufacturer's Instructions: Indicate preparation requirements, and anchor bolt placement.

1.5 CLOSEOUT SUBMITTALS

A. Design Engineer's Certificate: On completion of building provide the Site visit and certification in writing by pre-engineered building design engineer that work is in accordance with the design.

B. Record Documents: Record actual locations of concealed components and utilities.

C. Warranties: Completed original warranty forms filled out in OWNER's name and registered with manufacturer.

1.6 QUALITY ASSURANCE

A. Perform work in accordance with AISC Specification for Structural Steel Buildings, AISC Code of Standard Practice, AISC Quality Certification Program, Category MB, MBMA Metal Building Systems Manual, and MBMA Low Rise Building Systems Manual; which ever is most stringent.

B. Comply with International Building Code, 2006, and all applicable local and state building code requirements.

C. Qualify welding process and welding operators in accordance with AWS standards.

D. Weld steel in accordance with AWS standards.

1.7 QUALIFICATIONS

A. Manufacturer: Company specializing in manufacturing the products specified in this Section with minimum 5 years documented experience.

B. Erector: Company specializing in performing the work with minimum 5 years documented experience and approved, under license, by manufacturer.

C. Design structural components, develop shop drawings, and perform shop and Site work under direct supervision of a professional structural engineer experienced in design of this work and licensed in the state of Indiana.

1.8 DELIVERY, STORAGE, AND HANDLING

A. Comply with manufacturer's instructions.

B. Deliver materials to the Site bearing manufacturer's labels and seals intact.

C. Store materials in a weathertight, damp-free structure, and in accordance with manufacturer's instructions.

1.9 SEQUENCING AND SCHEDULING

A. Sequence and schedule work to coordinate with installation of process equipment and mechanical/electrical requirements.

1.10 MANUFACTURER'S WARRANTY

A. Provide 2-year manufacturer's warranty for pre-engineered building with 10-year extended warranty for roof panels and roof weathertightness.

B. Warranty: Include coverage for exterior prefinished surfaces to cover prefinished color coat against chipping, cracking or crazing, blistering, peeling, chalking, or fading. Include coverage for weathertightness of building enclosure elements after installation.

C. Fill out original warranty forms in OWNER's name and register with manufacturer.

PART 2 PRODUCTS

2.1 DESIGN REQUIREMENTS

A. Single span rigid frame with tapered/gabled beam and straight (non-tapered) columns.

B. Primary Framing: Rigid frame of rafter beams and columns, intermediate columns, braced end frames, and wind bracing.

C. Secondary Framing: Purlins, girts, eave struts, flange bracing, sill supports, clips, and other items.

D. Wall System: Preformed metal panels of vertical profile, and accessory components.

E. Roof System: Preformed metal panels of upslope profile, and accessory components. Design roof system for collateral live load of 15 pounds per sq. ft.

F. Roof Slope: 1- inch in 12 inches.

G. Thermal Resistance of Wall System: R-value of 13.

H. Thermal Resistance of Roof System: R-value of 20.

I. Design members to withstand the most severe load combination of dead load, applicable snow load, auxiliary loads, collateral loads, seismic loads, and loads due to pressure and suction of wind, in accordance with applicable building code.

J. Exterior wall and roof system shall withstand imposed loads with maximum allowable deflection of span: 1/180

K. Provide drainage to exterior for water entering or condensation occurring within wall or roof system.

L. Permit thermal movement of components without buckling, failure of joint seals, undue stress on fasteners, or other detrimental effects, when subject to ambient temperature range of 120 degrees Fahrenheit.

M. Size and fabricate wall and roof systems free of distortion or defects detrimental to appearance or performance.

N. Use of other acceptable manufacturers' products and arrangement of girts may require changes to foundation dimensions, design, and building size in order to maintain inside building clearances as shown on the Drawings, such changes being at no additional cost to OWNER.

O. Auxiliary Loads: Design for collateral, pipe, cable, and equipment loads as shown on the Drawings.

2.2 MANUFACTURER(S) - BUILDING SYSTEM.

A. Butler Manufacturing Company, product size and shape as indicated on the drawings;

B. Nucor Building Systems;

C. Ceco Building Systems;

D. Approved equal.

2.3 BUILDING DESCRIPTION AND SITE LOCATION

A. The building is to be installed in Attica, Indiana.

B. The building will be used to house the equipment shown on the contract drawings.

C. Building Type: Pre-Engineered Metal, Structural Steel Rigid Frame.

D. Building Occupancy Class: F-2 (Factory-Industrial Low Hazard Occupancy).

E. Construction: Non combustible Type 2B (IBC 2006 Section 602.2, Table 1003.2.2.2).

F. Roof Live load: 15 pounds per square foot

G. Ground Snow load: 20 pounds per square foot
Snow exposure factor = 1.0
Snow load importance factor = 1.0.

H. Wind Load: 90 miles per hour
Exposure category C
Wind load importance factor = 1.0.

I. Earthquake Load: Seismic Group = 1
Seismic importance factor = 1.0
Mapped spectral response acceleration - short period = 0.305
Design spectral response coefficient - short period = 0.203
Seismic Design category C

2.4 BUILDING DIMENSIONS

A. Approximately 20'-0" by 24'-0" (centerline of exterior column dimensions).
12 feet clear inside height
Area = approximately 480 square feet

2.5 BUILDING ACCESSORIES

A. The building scope of work to include the supply and installation of the following items and quantities. The location within the structure building is indicated on the drawings

- One (1) exterior man door, insulated, 3ft x 7ft. standard per building manufacturer.
- One (1) manually operated, insulated overhead door (provided by the building manufacturer).
- Building shall be designed and constructed to support louvers, fans and heaters as shown on the Drawings.
- Framed openings for (1) 6-inch diameter exhaust silencer piping through wall as shown on the Drawings.

B. The building may include framed openings in the building exterior walls for equipment installed by others at a later date. The Contractor shall design the building accordingly.

2.6 MATERIALS - FRAMING

A. Structural Steel Members W, WT, HP Shapes: ASTM A992, 50 ksi minimum yield stress.

B. Structural Tubing: ASTM A500 Grade B.

C. Channels and angles: ASTM A36

D. Plate or Bar Stock: ASTM A36.

E. Anchor Bolts: ASTM F1554, hot dipped galvanized in accordance with ASTM A153 and A123.

F. Connection Bolts, Nuts, and Washers: ASTM A325 and A490, hot dipped galvanized in accordance with ASTM A153.

G. Welding Materials: AWS D1.1, type required for materials being welded.

2.7 MATERIALS - WALL AND ROOF SYSTEM.

A. Wall: Butler Manufacturing Company - Butlerib II Siding, 26 gage, galvanized and Butler-Cote 500 FP (Kynar-Hylar fluoropolymer coating) finish system painted. Liner panel MOD-36, 28 gage, galvalume, white.

B. Roof: Butler Manufacturing Company - MR-24 Standing Seam Roof, 24 gage, galvanized and Butler-Cote 500 FP (Kynar-Hylar fluoropolymer coating) finish system painted.

C. Insulation: Roll glass fiber type, faced with reinforced white vinyl, Underwriters Laboratories Inc flame spread classification of 25 or less where exposed.

D. Joint Seal Gaskets: Manufacturer's standard.

E. Fasteners: Manufacturer's standard, galvanized in accordance with ASTM A153, 1.25 ounces per square foot galvanized coating, finish to match adjacent surfaces when exterior exposed.

F. Sealant: Manufacturer's standard, non-staining, elastomeric, skinning.

G. Metal Mesh: Galvanized steel wire, woven.

H. Trim, Closure Pieces, Caps, Flashings, Rainwater Diverter, Fascias, and Infills: Same material, thickness, and finish as exterior sheets; formed to required profiles.

2.8 METAL DOORS AND FRAMES

A. Doors, frames and hardware: Manufacturer's standard.

2.9 OVERHEAD DOOR

A. Overhead Doors: Manufacturer's standard, able to withstand 20psf wind load. Size as shown on the Drawings.

B. Overhead Door Frame: Manufacturer's standard. Formed steel sections braced to building frame. Provide building framing to suit.

2.10 FABRICATION - FRAMING

A. Fabricate members in accordance with AISC specification for plate, bar, tube, or rolled structural shapes.

B. Anchor Bolts: Formed with straight shank, assembled with template for casting into concrete.

C. Provide framing for doors, louvers and piping penetrations.

D. Field welding of framing members will not be permitted. Welding of structural members shall be completed in the building manufacturer's plant.

E. All field connections shall be bolted. Members fabricated in the shop shall include all bolt connection holes.

F. All primary and secondary structural steel shall be shop primed by the building manufacturer.

2.11 FABRICATION - WALL AND ROOF SYSTEMS

A. Manufacturer's standard for wall siding, roofing, and liner panel, type and gage.

B. Roofing: Butler MR 24 standing seam roof system, color selected by OWNER from manufacturer's standard range.

C. Liner: Butlerib II liner panel, plain galvanized, color selected by OWNER from manufacturer's standard range.

D. Girts/Purlins: Rolled formed structural shape to receive siding, roofing and liner sheet.

E. Internal Corners: Same material thickness and finish as adjacent material, profile shop cut and factory mitered to required angles.

F. Fasteners: To maintain load requirements and weathertight installation, same finish as cladding, non-corrosive finish.

2.12 FABRICATION - GUTTERS AND DOWNSPOUTS

A. Fabricate of same material and finish as roofing metal, color selected by OWNER from manufacturer's standard range.

B. Form gutters and downspouts of profile and size to collect and remove water. Fabricate with connection pieces.

C. Form sections in maximum possible lengths. Hem exposed edges. Allow for expansion at joints.

D. Fabricate support straps of same material and finish as roofing metal, color selected by OWNER from manufacturer's standard range.

\2.13 FINISHING

A. All wall and roof systems including accessories shall be shop pre-finished with galvanizing and Butler-Cote 500 FP finish system.

B. For all structural steel members including primary and secondary framing scheduled to be

painted, prime and paint in accordance with Section 09900 Paints and Coatings.

C. Color as selected by Engineer/Owner from manufacturer's standard range.

PART 3 EXECUTION

3.1 EXAMINATION

A. Verify that foundation, floor slab, mechanical and electrical utilities, and anchor bolts are in correct position.

B. Verify that the Shop Drawings have been submitted and reviewed by ENGINEER.

3.2 PREPARATION

A. Comply with manufacturer's instructions.

B. Keep units free of temporary construction loads until permanently secured.

C. Protect galvanized or other finished surfaces from damage.

D. Modify framing and/or base plates to correct inaccuracies in foundation anchor bolts placements.

3.3 ERECTION - FRAMING

A. Erect framing in accordance with AISC Specification for Structural Steel for Buildings and manufacturer's instructions. Set structural members level and plumb, in correct position.

B. Provide for erection and wind loads. Provide temporary bracing to maintain structure safe, plumb and in true alignment until completion of erection and installation of permanent bracing.

C. Set column base plates with non-shrink grout to achieve full plate bearing.

D. Do not field cut or alter structural members.

E. After erection, prime welds, abrasions, and surfaces not shop primed.

F. Correct slight inaccuracies in punching by reaming. Do not enlarge holes by drifting.

G. Verify that final connections have been accomplished.

3.4 ERECTION - WALL AND ROOFING SYSTEMS

A. Install wall and roofing systems in accordance with manufacturer's instructions.

B. Exercise care when cutting pre-finished material to ensure cuttings do not remain on finish surface.

C. Fasten cladding system to structural supports, aligned level and plumb.

D. Locate end laps over supports. End laps minimum 2 inches. Place side laps over bearing.

E. Provide expansion joints where shown on the Drawings.

F. Install insulation and vapor retarder utilizing girts and purlins for attachment. Place wire mesh under vapor retarder for support between framing members.

G. Install flashing, sealant, and gaskets to prevent weather penetration.

H. Secure wall assemblies ensuring a completed installation free from noise, rattles, wind whistles, or noise due to thermal movement.

I. Ensure continuous vapor barrier seal by pre-caulking female joints.

H. Install base angle/channel, base trim and flashing over perimeter foundation wall insulation.

3.5 ERECTION - GUTTER AND DOWNSPOUT

A. Rigidly support and secure components with self-tapping screws. Joint lengths with formed seams sealed watertight. Flash and seal gutters to downspouts.

B. Apply bituminous paint on surfaces in contact with cementitious materials.

C. Slope gutters minimum 1/8 inch per foot.

D. Install splash pads under each downspout as required.

3.6 INSTALLATION - ACCESSORIES

A. Install door frames, door, overhead coiling door, and hardware in accordance with manufacturer's instructions.

B. Flash and seal wall and roof accessories weathertight with sealant, both sides.

3.7 TOLERANCES

A. Framing Members: 1/4 inch from level; 1/8 inch from plumb.

B. Siding and Roofing: 1/8 inch from true position.

END OF SECTION

SECTION 16075

ELECTRICAL IDENTIFICATION

PART 1 - GENERAL

1.01 SECTION INCLUDES

A. This section includes minimum requirements for the project electrical identification means in all project locations as shown on the drawings and as specified herein. This shall include equipment and device nameplates and labels, wire and cable markers, and the underground wiring warning tape.

1.02 RELATED SECTIONS

A. The following sections relate to this section Work:

1. Section 16005 – Electrical Installation.
2. Section 16010 – Electrical Conditions.
3. Section 16060 – Grounding and Bonding.
4. Section 16070 – Electrical Hangers and Supports.
5. Section 16075 – Electrical Identification.
6. Section 16110 – Conduit.
7. Section 16120 – Wire and Cable.
8. Section 16140 – Wiring Devices.
9. Section 16160 – Lighting Panelboards.
10. Section 16265 – 480V Adjustable Speed Drives.
11. Section 16405 – Utility Services.
12. Section 16500 – Lighting.
13. Section 16680 – Surge Protection.

1.03 REFERENCES

A. CONTRACTOR'S Work shall comply with the latest requirements of all applicable codes, standards, guides, practices and local regulations pertaining to the job at the time of bidding, and it shall carry approval labels where required. As a minimum, the following shall apply:

1. ANSI/NFPA 70 – National Electrical Code.
2. NFPA 70E – Standard for Electrical Safety in the Workplace.
3. ANSI/IEEE C2 – National Electrical Safety Code.
4. OSHA CER 1910, Subpart S – Electrical General, Parts 1 & 2.

1.04 SUBMITTALS FOR REVIEW

A. CONTRACTOR shall submit, for approval, catalog cuts for all wire, cable, markers, and underground warning tape proposed for this section Work.

B. CONTRACTOR shall submit identification nameplate and label legends, for approval, with the equipment shop drawing submittals which pertain to the other sections work (reference Related Sections).

PART 2 PRODUCTS

2.01 NAMEPLATES AND LABELS

A. Nameplates: Engraved 3-layer laminated plastic, black letters on white background. This shall be provided for all electrical equipment and device enclosures (if not furnished by the equipment supplier). The nameplates shall have 1/4-inch letters for identifying individual equipment and loads, 1/2-inch letters for identifying grouped equipment and loads.

B. Labels: Embossed adhesive tape, with 3/16-inch white letters on black background. Use only for identification of individual wall switches and receptacles, and control device stations.

2.02 WIRE MARKERS

A. Tubing type wire marker with typed in legend. The markers shall be by Thomas and Betts. Other acceptable manufacturers shall be Burndy, Panduit, or 3M Electrical Products.

B. Locations: Each conductor at panelboard gutters, outlet and junction boxes, control panels, and instruments.

C. Legend:

1. Power and Lighting Circuits: Branch circuit or feeder number as shown on the drawings.

2. Control and Instrumentation Circuits: Wire and circuit designation as indicated on the schematic and interconnection drawings.

2.03 UNDERGROUND WARNING TAPE

A. Underground warning tape as manufactured by LEM Products. Other acceptable manufactures shall be Thomas and Betts and 3M Electrical Products.

B. Tape Description: 6-inch wide plastic tape, detectable type, colored red, with warning legend "BURIED ELECTRICAL LINE BELOW."

PART 3 - EXECUTION

3.01 INSTALLATION – GENERAL REQUIREMENTS

A. Degrease and clean surfaces to receive nameplates and labels.

B. Install nameplates and labels parallel to equipment lines.

C. Secure nameplates to equipment front using stainless rust resistant screws.

D. Identify underground conduits using underground warning tape. Install one tape per trench at 6 inches below finished grade.

3.02 FIELD QUALITY CONTROL

A. Demonstration: On completion, demonstrate to ENGINEER that all project identification means have been supplied and installed as specified.

END OF SECTION

SECTION 16120

WIRE AND CABLE

PART 1 - GENERAL

1.01 SECTION INCLUDES

A. This section includes minimum requirements for the project wire and cable in all project locations as shown on the drawings and as specified herein. This shall include all project wire, cable, wiring identification, and terminations.

1.02 RELATED SECTIONS

A. The following sections relate to this section Work:

1. Section 16005 – Electrical Installation.
2. Section 16010 – Electrical Conditions.
3. Section 16060 – Grounding and Bonding.
4. Section 16070 – Electrical Hangers and Supports.
5. Section 16075 – Electrical Identification.
6. Section 16110 – Conduit.
7. Section 16120 – Wire and Cable.
8. Section 16140 – Wiring Devices.
9. Section 16160 – Lighting Panelboards.
10. Section 16265 – 480V Adjustable Speed Drives.
11. Section 16405 – Utility Services.
12. Section 16500 – Lighting.
13. Section 16680 – Surge Protection.

1.03 REFERENCES

A. CONTRACTOR'S Work shall comply with the latest requirements of all applicable codes, standards, guides, practices and local regulations pertaining to the job at the time of bidding, and it shall carry approval labels where required. As a minimum, the following shall apply:

1. ANSI/NFPA 70 – National Electrical Code.
2. NFPA 70E – Standard for Electrical Safety in the Workplace.
3. ANSI/IEEE C2 – National Electrical Safety Code.
4. OSHA CER 1910, Subpart S – Electrical General, Parts 1 & 2.

5. Underwriters Laboratories Inc. (UL).

1.04 SUBMITTALS FOR REVIEW

A. CONTRACTOR shall submit, for approval, catalog cuts for all wire and cable proposed for this section Work.

B. CONTRACTOR shall submit, for approval, all revised Contract Drawings showing revised wiring routing and wire sizes as specified in Section 16010, Electrical Conditions.

C. CONTRACTOR shall submit, for approval, all required interconnecting wiring termination drawings as specified in Section 16010, Electrical Conditions.

1.05 SUBMITTALS FOR CLOSEOUT

A. On completion, CONTRACTOR shall submit, for approval, accurately completed project Record Drawing showing actual location, routing and termination details of all wire and cable work.

PART 2 – PRODUCTS

2.01 MATERIAL - GENERAL REQUIREMENTS

A. All wire, cable and terminations for the project shall be NEC compliant, UL-approved product.

2.02 HIGH VOLTAGE POWER CABLE

A. Description: NEC MV type, single-conductor, 175 mil 100% insulated, copper tape shielded cable for use in aerial, direct burial, conduit and underground duct installations.

B. Conductor: Class B stranded, soft or annealed copper, sizes as shown on the drawings.

C. Voltage Rating: 15KV.

D. Insulation: EPR.

E. Temperature Rating: 90 degrees C.

F. Overall Jacket: Black sunlight resistant PVC.

G. Approved Manufacturer (s): Southwire or approved equal.

2.03 LOW VOLTAGE POWER AND CONTROL CABLE

A. Description: NEC general wiring type, single-conductor cable.

B. Conductor: Class B stranded, annealed copper, sizes as shown on the drawings.

C. Voltage Rating: 600 volts.

D. Insulation: 75 /90 degrees C, THHN/THWN type (above ground) and XHHW type (below ground).

E. Approved Manufacturer (s): General Cable, Okonite, Southwire, or approved equal.

2.04 INSTRUMENTATION CABLE

A. Analog Cable: 600V, 16AWG copper twisted shielded pair with overall PVC jacket, Belden 9342.

B. Digital Cable: 600V, 16AWG copper twisted unshielded pair with overall PVC jacket, Belden 9487.

2.05 HIGH VOLTAGE CABLE TERMINATIONS

A. All high voltage shielded cable terminations at the transformers, shall be made with Cooper Power Systems or 3M 15kV, 200A rated loadbreak elbow connectors.

B. All high voltage shielded cable terminations at the 13.2kV main switchgear and 13.2kV pad-mounted switches, shall be made with Raychem TFT-E or approved equal 15kV-rated stress relief connectors.

2.06 LOW VOLTAGE WIRING CONNECTORS

A. All 480 V power terminations at motors and buswork shall be made with Burndy two-hole “Hylug” or approved equal compression type connectors.

B. All instrumentation wiring terminating at screw type terminals shall be made with Thomas & Betts “Sta-Kon” or approved equal insulated “fork-type” spring connectors.

PART 3 EXECUTION

3.01 GENERAL REQUIREMENTS

A. The wire and cable quantity and sizes, as shown on the Contract Drawings shall not be considered absolute. This information, as indicated on the Contract Drawings or in this specification, is based on preliminary engineering data available to ENGINEER during preparation of the Contract Documents. CONTRACTOR shall completely revise the Contract Drawings, as specified in Section 16010, Electrical Conditions and based on the equipment data and actual field conditions, and furnish all necessary project wire and cable as required.

3.02 INSTALLATION – GUIDELINES

A. The wire and cable installation shall include wire and cable handling, cutting, training, pulling, termination and testing.

B. All wiring and cable shall be enclosed in conduit, except temporary wiring installation, which shall comply with NEC requirements for temporary installations and as instructed by OWNER and /or by the local authority having jurisdiction.

C. All wiring shall be properly grounded, color-coded, phased and/or polarized throughout. The wiring color code shall be as follows:

1. AC Power and Lighting Wiring: Black phase markings in accordance with NEC.

2. AC Control Wiring: Red.

3. Ground: Green.

4. Instrumentation Analog and Digital Cable: Red (+), black (-).

D. No conductor shall be installed until the raceway system that contains it is complete.

E. Install wire and cable in accordance with manufacturer's instructions. Employ manufacturer recommended tools and installation methods. Never exceed manufacturer's recommended cable bending radiuses and pull tensions. Pull all conductors into raceway at the same time. Use manufacturer recommended greaseless conductor pulling compound only.

F. All conductors shall be installed in continuous runs, from origin to equipment, without splices or joint unless specifically indicated on the Contract Drawings.

G. Cable splices, if any, and terminations shall carry full ampacity of conductors with no perceptible temperature rise.

H. All wire/cable terminations shall be made to terminal blocks, bus, or connectors in approved enclosures.

I. All conductors shall be installed and terminated without nicking the insulation.

J. Neatly train and lace wiring inside boxes, equipment, and panelboards.

K. All cables, cables conductors and wires shall be clearly identified with identification numbers, as indicated on the drawings, at all pull boxes, equipment and devices enclosures, and at the terminating points. Identify each cable, cable conductor, or wire by a marker at each terminating point in accordance with Section 16075, Electrical Identification. All identification letters and numbers shall be typed.

L. Wire pulled prior to the equipment setting, or completion of conduit termination, shall be protected from the environment and shall be neatly coiled and protected from damage.

M. Terminations:

1. All cable terminations shall be completed only after the cable checks and tests have been performed and found acceptable by ENGINEER.

2. Conducting surfaces of the cable terminating ends shall be thoroughly cleaned before applying connectors.

3. No more than two wires shall be terminated at any terminal. Wire twisting around the terminal will not be allowed.

N. Checkouts and Tests:

1. Prove all interconnecting cable and wire continuity and freedom from grounds and short circuit.

2. Ensure the equipment proper polarity and phasing, and that all conductors have been terminated at the correct terminals.

3. All power, control, and instrumentation wiring shall be tested. Cable, which fails the test, shall be promptly replaced at CONTRACTOR’S expense.

4. All underground cables shall be tested twice prior to and after backfill of the trenches.

5. All test results shall be documented and submitted to ENGINEER for review and comments, and shall later become a part of the as-built documents.

6. The high voltage cable shall be given manufacturer’s recommended high voltage test.

7. The low voltage cable tests shall be performed with a digital insulation and continuity tester (AVO INTERNATIONAL Megger BM80 or approved equal) as follows:

   a. All 480V power and motor feeders shall be 1000 VDC megger tested. Record lowest readings. Reference insulation resistance numbers shall be obtained from the cable manufacturer.

   b. Instrumentation cable shall be checked for continuity only (disconnect all associated surge protective devices during the test).

O. Phasing:

1. The entire electrical system shall be properly phased-out by CONTRACTOR, so that all three-phase transformers, motor control center, distribution panels, disconnects, power outlets, etc., are identical in phase relationship.

2. The phasing shall be of A-B-C sequence, left to right, top to bottom, front to back.

3.03 DEBRIS

A. During cable installation, at the end of each day, CONTRACTOR shall ensure that cable cuttings and other cable waste are deposited into a trash container to avoid any debris left in the work area, and in the equipment enclosures.

3.04 DAILY RUNNING RECORD

A. CONTRACTOR shall keep a daily running record of cables pulled and terminated, and it should be available for ENGINEER'S periodic inspection.

3.05 FIELD QUALITY CONTROL

A. On completion, CONTRACTOR shall demonstrate to ENGINEER that all project wire and cable has been installed as specified.

END OF SECTION

SECTION 16140

WIRING DEVICES

PART 1 - GENERAL

1.01 SCOPE

A. This Section covers minimum requirements for miscellaneous wiring devices furnished by the CONTRACTOR.

B. The miscellaneous wiring devices shall include, but not be limited to: convenience receptacles, GFCI convenience receptacles, locking receptacles, and plugs.

C. All receptacles shall be supplied and installed complete with all necessary accessories such as boxes (enclosures), cover plates, and supports.

D. Refer to the Contract Drawings for additional requirements.

1.02 SUBMITTAL

A. For Approval

1. Submit Manufacturer's data (i.e., catalog cut sheets) for each type of device supplied.

PART 2 - PRODUCT

2.01 GENERAL

A. Each device shall be UL listed and bear a label or imprinted mark stating so.

B. Furnish devices as manufactured by: Hubbell; Leviton; Pass & Seymour/Legrand; or equal.

2.01 CONVENIENCE RECEPTACLES

A. Straight Blade Duplex Receptacle

1. 125VAC rating.

2. 15 Ampere.

3. 2 pole, 3 wire, U ground slot.

4. Industrial Specification Grade.

5. Side wired.

6. Ivory color (except where wall finish is wood or dark in color, then use brown).

7. Leviton Model #5242-I or equal.

2.01 GFCI CONVENIENCE RECEPTACLES

A. Straight Blade GFCI Duplex Receptacle

1. 125VAC rating.
2. 15 Ampere.
3. 2 pole, 3 wire, U ground slot.
4. Commercial Specification Grade.
5. Side wired.
6. Test and Reset buttons.
7. Device operation to automatically lockout if ground continuity is absent.
8. Leviton Model #8599-I or equal.

2.02 LOCKING RECEPTACLES

A. When indicated on the Contract Drawings, a locking plug and receptacle shall be utilized as a means of isolating small building service loads (i.e. electric unit heaters, high bay light fixtures, etc.) or small pieces of process equipment (i.e. metering pumps, chlorinators, etc.).

B. Receptacle

1. Unless noted otherwise, utilize single (as opposed to duplex) receptacle devices.
2. Each device to include one (1) grounding contact.
3. Standard NEMA rating and configuration.
4. Industrial Specification Grade.
5. Leviton or equal.

2.03 PLUGS

A. Locking Plugs

1. Each device to include one (1) grounding pin.
2. Standard NEMA rating and configuration.
3. Industrial Specification Grade.
4. Device supplier to include a length, minimum 1’-6” ± (18” nominal) and maximum 4’-0” ± (48” nominal), of extra flexible cable to interconnect the device and the piece of equipment.
5. Leviton or equal.

2.04 COVER PLATES

A. Recessed Box(es)

1. Commercial grade molded nylon wall plates to match color of receptacle.

B. Surface Mounted Box(es)

1. Commercial grade stamped Type 430 stainless steel complete with rounded or beveled edges.

C. Weatherproof Surface Mounted Box(es)

1. Commercial specification grade self-closing clear plastic cover which maintains the rain tight status even when the receptacle is in use.

2. Covers utilized in exterior applications shall also be padlockable.

PART 3 - EXECUTION

3.01 INSTALLATION

A. Unless noted otherwise on the Contract Drawings:

1. Mount convenience receptacles 1’-6”± (18” nominal) above the finished floor (A.F.F.).

2. Mount locking receptacles, utilized as equipment disconnects, at:

a. 2’-0” ± (24” nominal) above the finished floor for floor mounted equipment.

b. 6’-0” ± (72” nominal) above the finished floor for ceiling mounted equipment.

3. Mount devices vertically with the ground pole on the bottom.

END OF SECTION

SECTION 16265

480VAC VARIABLE FREQUENCY DRIVES

PART 1 GENERAL

1.01 SCOPE

A. This Section covers minimum requirements for low voltage (600V or less) Variable Frequency Drives (VFDs) furnished by the CONTRACTOR. Unit(s) shall be utilized to power AC electric motors for sewage pumps.

B. The drive manufacturer shall have a minimum of ten (10) continuous years of experience in the production and application of this type of equipment in the specified process field.

C. All necessary equipment, whether specified or not, shall be furnished and properly coordinated in accordance with the intent of this Specification. The vertical pump supplier shall be responsible for the proper function of all components. Any item, material, or detail not specified or indicated on the Contract Drawings shall be determined by the vertical pump manufacturer and shall be subject to approval.

1.02 QUALITY ASSURANCE

A. The drive manufacturing facility shall be ISO 9001 certified.

1.03 SUBMITTAL

A. For Approval

1. Submit manufacturer's standard data (i.e., catalog cut sheets) for each type of unit supplied.

2. A minimum of one (1) job specific layout drawing per unit type or rating complete with dimensions, total weight, shipping splits (if required), and material list.

3. Unit front face (operator interface) layout complete with devices.

4. Elementary diagrams complete with internal and external (field) wiring information.

5. Engineering data to prove compliance with IEEE Standard 519 Guide for Harmonic Control and Reactive Compensation for Static Power Converters. Include project specific analysis indicating total harmonic voltage distortion.

6. The name, address, and telephone number of a local (within 150 miles or less) factory authorized service organization.

   a. Include a signed statement indicating the maximum time required to have a factory trained service technician on-Site after telephone notification of an equipment malfunction.

   b. Include a signed statement indicating that standard replacement parts can be obtained, shipped, and delivered to the OWNER within 24-hours of a written request.

1.04 GUARANTEE

A. Each VFD unit shall be guaranteed to be free from defects in materials and workmanship for a minimum period of twelve (12) months from the date of certified start-up and acceptance by the OWNER. The guarantee shall include all parts, field and shop labor, travel time, and expenses.

B. The above general guarantee shall not act as a waiver of any original equipment manufacturers (OEM) warranty of greater length in time.

PART 2 PRODUCT

2.01 GENERAL

A. Each unit shall be:

1. UL listed and bear a label stating so.

2. Manufacturer's standard rating.

3. Permanently labeled with a Model number and a unique Serial number.

4. Manufactured and installed in accordance with the latest issue of ANSI, NEMA, IEEE, and NEC standards.

B. Site Conditions

1. Continuously operating (24-hours per day, 7-days per week) municipal wastewater facilities.

2. Non-hazardous industrial environment (damp, humid, dust, and dirt).

3. Indoor temperature range of 0-degree C (32-degrees F) to 40-degrees C (104-degrees F) and relative humidity 0 percent to 95 percent.

4. Elevation below 1,000 meters (3,300 feet) above sea level.

5. System Voltage

a. 480/277 VAC -10% +5% (432 to 504 volts AC).

b. 3 Phase.

c. 4 Wire.

d. 60 Hertz +/- 1 Hertz.

C. Motor Data

1. Unless noted otherwise or required by the process, each VFD shall be fully capable of operating any standard 460VAC three phase NEMA B squirrel cage induction motor.

2. The motor shall be energy efficient (premium).

2.02 FABRICATION

A. Enclosure

1. Each drive shall be open chassis for field mounting within an existing enclosure.

2. Each unit shall be vibration resistant.

3. Each unit shall be electro-magnetic interference (EMI) resistant.

B. Electrical

1. In multiple drive applications, each unit shall be fed incoming AC power from a common bus. Power distribution shall be supplied via a distribution panelboard.

2. Each drive shall include an incoming power disconnect device. The device shall provide unit overload protection and unit short circuit protection. The device shall be fused.

3. Each drive shall have a symmetrical short circuit current rating equal to or greater than the rating of the feeder circuit breaker and distribution switchboard.

4. A separately mounted incoming power isolation transformers shall be furnished; if required because of power quality

5. Units shall not be affected by (insensitive to) incoming AC power phase rotation.

6. Each drive shall utilize a full wave rectifier, DC bus filter, and, unless noted otherwise, a pulse width modulating (PWM) inverter.

7. Each unit shall be the manufacturers commonly produced solid state, microprocessor based, fully digital system utilizing surface mounted devices and modular construction. All control components shall be physically and electrically isolated from the power circuits.

8. No external sources of internal control power will be provided. Each drive shall include a 120 VAC control power transformer (CPT) with both primaries fused, one secondary fused, and one secondary grounded. Also, if necessary, a +24VDC power supply shall be included.

9. Internal wiring shall be 600V copper MTW. Minimum #14 AWG for power and #16 AWG for 120 VAC control. Provide plastic sleeve wire labels on both ends of each conductor. All ground conductor insulation shall be green and all external source interlocks shall be yellow.

10. Drive supplier shall guarantee that each unit, as measured at the drive incoming power terminals, shall not contribute more than 5 percent total harmonic distortion (THD) and 3 percent single harmonic distortion per IEEE 519 to the existing power distribution system. If the drive supplier determines that an AC input line reactor and/or filter is required, the reactor shall be furnished by the drive supplier and shall be mounted within the drive enclosure.

11. Internal Drive Protection:

    a. Incoming power over voltage.

    b. Incoming power under voltage.

    c. Incoming power phase loss.

    d. Instantaneous overcurrent.

e. Inverse time current.

f. Over temperature.

g. Over frequency.

h. Under frequency.

12. Drive supplier shall note the distance (or motor lead length) between the VFD and the motor. If deemed necessary by the drive supplier to avoid nuisance trips due to capacitive current flow to ground, furnish an output line reactor and/or output line filter for each VFD.

C. Performance

1. A 97 percent or better efficiency at base speed and 100 percent load. The efficiency at 50 percent of base speed shall be 95 percent or better.

2. A 0.95 lagging or better power factor at all operating speeds. Unless noted otherwise, the unit shall not exceed a unity power factor.

3. Maintain speed control, regardless of load, within ±1.0 percent of motor base speed.

D. Capabilities

1. Unit shall be able to start, without tripping, into a rotating (forward or reverse) load.

2. Constant (high) torque starting mode with automatic adjustment to variable (running) torque.

3. Each unit shall be an AC/DC/AC converter utilizing isolated gate bipolar transistor (IGBT) technology. Drives shall have an optional mode for scalar or Volts/Hertz operation. In the V/H operating mode, each drive shall be capable of maintaining a constant volts-to-hertz ratio throughout the speed range.

4. Drive output current (Io) overload capacity shall be 150 percent of the normal rated current for one minute out of every ten minutes and 200 percent for two seconds out of every fifteen (15) seconds. Unit(s) shall include instantaneous overcurrent trip at 350 percent of normal rated current. All values shall be easily field adjustable.

5. Output frequency shall be easily field adjustable between zero and three hundred Hertz.

6. Starting and running slip compensation shall be available.

7. Unit shall be capable of no-load operation during maintenance.

8. Unit shall be capable of continuous operation at full rated current and load within the Site Conditions stated in this Technical Specification Section. Each drive shall be self-adjusting to incoming AC power fluctuations. Fluctuations within this range shall cause no interruption of drive operation.

9. Provide motor protection:

a. Solid state field adjustment thermal overload.

b. Critical speed lockout.

c. Phase-to-phase short-circuit.

d. Phase-to-ground short-circuit.

10. Perform an orderly and non-component damaging shutdown upon internal fault or loss of incoming power.

11. Ability to ride through a 30-cycle (or 0.5 second) local electric utility company power outage. Include a power loss ride through feature that will allow the drive to remain fully operational after losing power as long as kinetic energy can be recovered from the rotating mass of the motor and load.

12. Unit(s) shall have an automatic energy optimization option to adjust the volts-to-hertz ratio for minimum energy consumption while maintaining the load requirements.

2.03 INTERFACE

A. Local Operator Interface

1. Each unit shall include a lamacoid nameplate (black lettering on a white background) identifying OWNER'S designation (i.e., Pump No. 1 VFD). Anchoring method shall not void the integrity (NEMA rating) of the enclosure. Minimum size shall be 3 inch by 6 inch.

2. Unless noted otherwise, each VFD shall include a front mounted Operator Control Panel (OCP) consisting of a four line by twenty-character backlit alphanumeric display and a keypad with Run/Stop, Local/Remote, Increase/Decrease, menu navigation, and parameter Select/Save pushbuttons. This keypad and display shall be able to perform all programming and configuration functions for each individual drive unit.

a. All parameter names, fault messages, warnings, and all other information shall be displayed in simple complete plain English words or standard English abbreviations to allow the user to understand what is being displayed without the use of a manual or cross-reference table (coded messages are not acceptable).

b. Each OCP shall be capable of uploading drive parameter settings to non-volatile OCP memory and downloading drive parameter settings from non-volatile OCP memory to the same drive or to another similar drive OCP.

c. The display capabilities shall include, but not be limited to:

1) Output voltage, current, frequency, or torque.

2) Output speed in RPMs, % of total, or other engineered units.

3) Input voltage, power (kW), or energy (kWh).

4) Internal drive heatsink temperature (in % of unit trip).

5) Status of discrete inputs and outputs.

6) Values of analog input and output signals.

7) Values of PID controller references, feedback loops, and error signals.

d. During normal drive operation, one line of the OCP display shall indicate the speed reference, the run/stop status, and the local/remote status. The remaining three lines shall display the values of any three (3) OWNER selected parameters. Include detailed trip and/or fault indication.

e. Provide lockout capabilities to prevent unwanted programming. Lockout must not inhibit Local/Remote selection or manual operation.

f. Loss of incoming AC power or drive internal control power shall not necessitate a reloading of any drive parameters and/or configuration. The local operator interface as well as the entire drive shall automatically reset and be ready for continued operation upon return of power.

g. Each OCP shall include capabilities to increase/decrease the motor speed when the VFD is in local or "HAND" mode.

3. Include a non-resettable elapsed running time meter (ETM).

B. External Interface

1. Hardwired Inputs

a. Include three (3) independently programmable analog inputs with easily field selectable functions. One (1) shall be 0 – 10 VAC and two (2) shall be 4 – 20 mA DC. Provide input isolation for each. Processing functions shall include scaling adjustment, adjustable filtering, and signal inversion. One input will typically be utilized for speed reference from a central control system.

b. If the speed input reference is lost, the drive shall be field adjustable to stop and alarm a fault locally and to the central control system or to continue operating at a predetermined field adjustable speed and alarm a fault locally and to the central control system.

c. Include six (6) independently programmable discrete inputs with easily field selectable functions. Each input is intended for use as a dry contact with either an internal or external control power source. One input may typically be utilized as a Run/stop signal (115 VAC) and another may be utilized as an External Stop (115 VAC; normally closed safety device).

2. Hardwired Outputs

a. Include two (2) analog outputs that shall provide 4 – 20 mA DC signals. Outputs shall be independently programmable to provide proportional signals to easily field selectable functions such as drive output speed, frequency, current, or power.

b. Include three (3) form C independently programmable relay contact outputs with easily field selectable functions. Relay contacts shall be rated 8 amps at 250 VDC. General and specific warning and fault indications shall be available. One output may typically be utilized as a Drive Fault (115 VAC) signal and another may be used as a Drive Running (115 VAC) signal to a central control system.

3. All inputs and outputs shall be wired to terminal blocks for connection to field wiring.

4. Network Communication

a. A RS485 serial port connection shall be provided for network communication purposes. Each unit shall communicate with the proposed local control panel (LCP).

b. A remote input/output interface board shall be furnished to allow connection to other equipment. All drive parameters, operation programming, monitoring, and diagnostic functions shall be available via the serial link.

c. Unless specified otherwise or required for the application, MODBUS protocol shall be provided to allow direct communication with other drives and programmable logic controllers (PLCs). Each individual drive shall be addressable for serial network communication purposes.

C. Operate Selected Parameters

1. The following easily field adjustable operator selected parameters shall be included, at a minimum.

a. Preset output speed selection (if reference signal is lost).

b. Minimum output speed (20 to 60 percent of nominal rated speed).

c. Maximum output speed (100 to 110 percent of nominal rated speed).

d. Linear acceleration and declaration rates (1.0 to 90 seconds).

e. Output torque boost.

f. Running output current limit (up to 110% of full load current).

g. Frequency avoidance band (at least one).

h. Automatically attempt to restart after an internal fault or an external incoming power failure (on or off option).

i. Number of auto restart attempts (at least three).

j. Time delay between auto restart attempts (1-30 seconds).

2.04 MANUFACTURERS

A. Provide unit(s) as manufactured by:

1. Allen-Bradley, A Division of Rockwell Automation, Powerflex 40 Series.

2. Or equal.

PART 3 EXECUTION

3.01 SHIPPING

A. Unit(s) shall be handled and stored in accordance with the manufacturers written instructions.

3.02 FIELD INSTALLATION

A. Each unit shall be securely fastened to the existing enclosure utilizing appropriate anchors, nuts, and bolts. Unit enclosures shall not be field welded in any fashion.

B. The unit shall be mounted with the highest operator device no more than 5 feet 6inches above the finished floor.

C. Each unit shall be properly grounded per the NEC.

D. Close, using proper seals, all unused openings and/or penetrations to maintain the enclosure NEMA rating.

3.03 COMMISSIONING

A. The CONTRACTOR who supplied the unit shall be responsible for proving correct operation, under all possible conditions, to the OWNER.

B. Upon completion of the commissioning, the supplier shall furnish, within the O & M Manual, a complete set of “As-Installed” schematics and wiring diagrams for each type of unit.

3.04 TRAINING

A. The drive supplier shall provide a factory trained technician to conduct a one (1) normal 8-hour workday training session for up to six (6) of the OWNER'S representatives. The session will be conducted at the OWNER'S designated site and shall consist of instruction on the proper operation and maintenance of the equipment.

B. The drive supplier shall furnish all instruction material (one per OWNER representative plus two spares) to conduct the session. Upon completion of the training, all instructional material shall become the property of the OWNER.

3.05 FINAL PAYMENT

A. The CONTRACTOR shall not receive final payment under this Contract until:

1. The complete O & M Manual, including As-Builts, is received, reviewed, and accepted by the OWNER.

2. All training is complete.

END OF SECTION

SECTION 16680

SURGE PROTECTION

PART 1 - GENERAL

1.01 SCOPE

A. This Section covers minimum requirements for transient voltage surge suppressors (TVSS) furnished either by Vendors, as part of pre-packaged equipment, or by installation CONTRACTORS.

B. All surge protection units for this Work shall be from a single manufacturer. All surge protection devices for this Work shall be from a single manufacturer. Units and devices need not be from the same manufacturer.

C. For electrical power systems that include multiple application points of surge protection units, the unit supplier shall be responsible for overall surge protection coordination.

1.02 SUBMITTAL

A. For Approval

1. Submit Manufacturer's data (i.e., catalog cut sheets) for each type of unit or device to be supplied.

PART 2 - PRODUCT

2.01 GENERAL

A. Each unit or device shall be UL listed and bear a label stating so.

B. Each unit or device shall include, at a minimum:

1. Surge arrestor.

2. EMI/RFI filter.

3. Voltage clamp.

4. Single point grounding.

5. Normal mode protection (L-N).

6. Common mode protection (L-G & N-G).

7. Industrial grade.

8. LED indication of phase protection functioning.

9. Push-to-test function to verify unit is operating properly.

10. Capability to handle 110% of the nominal system operating voltage.

2.02 SECONDARY POWER SURGE SUPPRESSORS

A. Unit enclosure shall be as indicated on the Contract Drawings or in other sections of this Specification. In general, units mounted within a control panel or within a panelboard shall be NEMA 1; units that service panelboards but are mounted externally shall match the panelboard enclosure NEMA rating; and units mounted outdoors shall be NEMA 3R.

B. Each unit shall be manufactured to UL Standard 1449 Second Edition.

C. Each unit shall contain:

1. At least one (1) non-linear component.

2. Easily field replaceable components (modular design).

3. Surge current diversion paths for all modes of protection.

4. Easily field replaceable surge rated fuses for each mode.

D. Provide unit(s) as manufactured by:

1. Advanced Protection Technologies, Inc. TE Series.

2. MCG Surge Protection XT or M Series.

3. Or equal.

2.03 TVSS RECEPTACLES

A. Individual 120VAC, 60HZ, 20A duplex receptacle complete with integral suppressor.

B. Provide device(s) as manufactured by:

1. Leviton Model 5380.

2. Or equal.

PART 3 - EXECUTION

3.01 INSTALLATION

A. Each unit or device shall be interconnected to a dedicated multi-pole circuit breaker.

B. Where indicated, furnish surge protection at motor control centers (MCC), at distribution switchboards (DSB), and at distribution (DP), lighting (LP), and/or power (PP) panelboards. For new equipment applications, surge protection unit may be internally mounted (integral to the equipment enclosure). Where new surge protection is being added to existing equipment (retrofit applications), unit shall typically be separately mounted.

C. Where indicated, furnish surge protection within control panels containing solid state electronic equipment such as programmable logic controllers (PLCs) and SCADA remote terminal units (RTUs).

D. Where indicated, furnish surge protected duplex receptacles for portable electronic equipment such as personal computers (PCs).

E. Install all units per the manufacturer's recommendations (i.e. suppression device feeder breaker sizing, etc.). For externally mounted units, minimize the distance between the circuit breaker and the unit.

F. Properly ground all surge protection devices.

G. The supplier of the unit or device shall be responsible for power, control, and grounding interconnection.

END OF SECTION

SECTION 17420

INSTRUMENTS

PART 1 GENERAL

1.1 SECTION INCLUDES

A. Temperature Indicating Transmitter

B. Pressure Indicating Transmitter

C. Liquid Level Switches

D. Air Flow Indicator

E. Temperature Indicating Gauge

F. Pressure Indicating Gauge

G. Electric Actuated Motorized Valves

H. Pressure-Vacuum Transmitter

1.2 REFERENCES

A. Section 01400 – References: Requirements for References.

B. National Electrical Manufacturers Association (NEMA).

C. National Fire Protection Association, Inc. (NFPA): 70 – National Electrical Code.

D. Underwriters Laboratories Inc. (UL).

1.3 ALLOWANCES

A. Allowances shall be made for the number of days of commissioning or supervision required for installation and startup at the time of bid with no additional payment for startup or commissioning.

1.4 REGULATORY REQUIREMENTS

A. Conform to NFPA 70.

B. Furnish products listed and classified by UL as suitable for purpose specified and shown.

1.5 PROGRESS SUBMITTALS

A. Section 01300 – Submittal Procedures: Requirements for progress submittals.

B. Shop Drawings: Indicate operating data, system drawings, wiring diagrams, and written detailed description of operation.

C. Product Data: Include manufacturer's product and engineering data for each instrument. Include ranges, materials, and dimensions.

D. Test Reports: Include calibration reports.

E. Manufacturer's Instructions: Indicate application conditions and limitations of use. Include instructions for storage, handling, preparation, installation, and setup of product.

F. Instrumentation Specification: The project instrumentation requirements are listed on Attachment 1, Instrument List. The following project instrumentation requirements, shall be completed by the CONTRACTOR.

1. Complete review and update of all project instrumentation as specified in Section 17420.

2. Determine and submit for approval, final manufacture's instrument part number to satisfy all installation, specification and functional requirements.

3. Before procurement, submit all required instrument documentation to ENGINEER for review and approval. As a minimum, this shall include specific manufactures equipment part number, equipment cut sheets, equipment manufacturer's drawings, installation and operation manuals, equipment and installation test reports and the like.

1.6 CLOSEOUT SUBMITTALS

A. Section 01700 – Closeout Procedures.

B. Record Documents: Indicate actual locations of instruments. Include actual setpoints, analog signal spans, and programming setpoints data.

C. Operation and Maintenance Data: Include bound copies of operating and programming instructions, adjustments, and preventative maintenance procedures and materials. Provide manufacturer's technical operation and maintenance manuals. Provide six complete copies of the operating and maintenance instructions, including parts lists for all of the equipment. One copy to be single sided for production of additional operation and maintenance manuals. Bind material in sections in hard backed binders.

1.7 QUALIFICATIONS

A. Installer: Company specializing in performing the work of this Section with minimum three years documented experience.

1.8 DELIVERY, STORAGE, AND HANDLING

A. Section 01600 - Product Requirements: Requirements for transporting, handling, storing, and protecting products.

B. Accept instruments on the Site in factory containers. Inspect for damage.

C. Store products in clean and dry area.

1.9 SYSTEM STARTUP AND COMMISSIONING

A. Section 01700 - Closeout Procedures: Requirements for commissioning.

B. Provide instrumentation calibration, field configuration, documentation, startup and commissioning support for all instrumentation testing and integration.

C. Provide technical support for staff training for a minimum of one day after equipment commissioning.

1.10 MAINTENANCE MATERIALS

A. Section 01700 – Closeout Procedures: Requirements for maintenance materials.

B. Furnish 1 set of calibration accessories for the humidity transmitters.

PART 2 PRODUCTS

2.1 INSTRUMENT LIST

A. Appended to this Section is Attachment 1, Instrument List, which tabulates the instruments that form part of the work. Use this list in conjunction with Drawings.

2.2 TEMPERATURE INDICATING TRANSMITTER

A. Temperature indicating transmitter and sensor as manufactured by Rosemount USA, Inc (3144P) or approved equal.

B. Model: As per Instrument List.

C. Sensor: Type J (Iron, Constantine) thermocouple, spring loaded

D. Sensor Length: (per pipeline size).

E. Power Supply: 24 VDC Loop powered.

F. Transmitter Calibrated: 4-20mA output equals 0-250 ˚F

G. Thermowell: Stainless Steel, ¾ NPT, length per pipeline size.

2.3 PRESSURE INDICATING TRANSMITTER

A. Pressure indicating transmitter as manufactured by Rosemount (2051TG) or approved equal.

B. Model: As per Instrument List.

C. Power Supply: 24 VDC loop.

D. Output: 4-20 mA calibrated as per Instrument List.

E. Enclosure: Local LCD display. NEMA 4X.

F. Mountings: 1/2" NPT thread process connection through block and bleed manifold

2.4 LIQUID LEVEL SWITCHES

A. Horizontal mounted mechanical switches as manufactured by Omega (LVN-92) or approved equal.

B. Model: As per Instrument List

C. Output: Normal Open or Closed depending on installation.

D. Mounting: Side horizontal.

2.5 AIR FLOW INDICATORS

A. Variable area mechanical flow indicator as manufactured by ERDCO (3211) or approved equal.

B. Model: As per Instrument List, with integral indicator.

C. Indication: Visual indication, scale on side.

2.6 TEMPERATURE INDICATING GAUGE

A. Bimetal thermometers as manufactured by Ashcroft (EI series) or approved equal.

B. Model: As per Instrument List

C. Connection: ½" NPT any angle.

D. Construction: Hermetically sealed, External adjustment, All-welded stainless steel, Heavy-duty glass.

E. Accuracy: ±1% full-span

2.7 PRESSURE INDICATING GAUGE

A. Mechanical Bourdon tube Solid front gauge case design, 41⁄2″ diameter Dial Size as manufactured by Ashcroft Inc (Type 1279 Duragauge) or approved equal.

B. Model: As per Instrument List, with integral indicator and transmitter.

C. Micrometer adjustable pointer, Teflon-coated pinion, welded-tube construction

D. Hermetically sealed case: IP 65

E. Pump discharge service, Liquid-filled performance in a dry gauge

F. Process Connection 316 SS socket 1⁄2" NPT Lower

2.8 ELECTRIC ACTUATED MOTORIZED VALVE

A. Motorized 2-Piece Full port Ball Valve by Flow-Tek Inc (Model F15-WCB valve , Bray motor operator) or approved equal.

B. Model: As per Instrument List, with integral motor operator.

C. Materials of Construction: carbon steel body with 316ss ball & stem, PTFE seats & stem seals.

D. Power: 120 VAC, continuous duty motor, and NEMA 4 Electrical enclosure.

E. Indication: Limit switch for full open, full closed.

F. Process Connection: Per Instrument List.

G. Manual Operator: Hand de-clutch operator for manual operation.

2.3 PRESSURE- VACUUM TRANSMITTER

A. Pressure -Vacuum transmitter as manufactured Ge Sensing/Druck, Inc. (PTX 1240) or approved equal.

B. Model: As per Instrument List.

C. Power Supply: 24 VDC loop.

D. Output: 4-20 mA calibrated as per Instrument List.

E. Electrical connection: NEMA 4X with conduit connection.

F. Mountings: 1/4" NPT thread process connection through block valve.

PART 3 EXECUTION

3.1 EXAMINATION

A. Section 01700 - Execution Requirements: Verification of existing conditions before starting work.

B. Verify that systems are ready to receive work.

C. Sequence works to ensure installation of components is complimentary to installation of similar components in other systems.

D. Coordinate installation of system components with installation of mechanical systems equipment.

3.2 INSTALLATION

A. Install equipment in accordance with manufacturer's written instructions, final Shop Drawings, Drawings, applicable standards, and with manufacturer or Supplier supervision as required.

B. Install instruments and their associated sensors to ensure easy access for maintenance, calibration, withdrawal, and replacement.

C. Calibrate, program, and setup all instruments as directed by the ENGINEER.

3.3 MANUFACTURER'S FIELD SERVICES

A. Section 01400 - Quality Requirements: Requirements for preparing and starting systems.

B. Provide manufacturer's representative to inspect magnetic water flow transmitters and ultrasonic level transmitters after installation, and submit report prior to startup, verifying installation and operation is in accordace with specifications and manufacturer's written instructions.

3.4 ADJUSTING

A. Section 01700 - Execution Requirements: Requirements for adjusting installed work.

B. Adjust instrument setpoints as directed by ENGINEER.

3.5 DEMONSTRATION

A. Section 01700 - Facility Operation: Requirements for demonstrating installed work.

B. Demonstrate operation of installed instrumentation.

3.6 PROTECTION OF FINISHED WORK

A. Section 01700 - Execution Requirements: Requirements for protecting installed work.

END OF SECTION

SECTION 17431

CONTROL PANELS

PART 1 GENERAL

1.1 SECTION INCLUDES

A. Control panels

B. Automatic telephone dialer

C. Uninterruptible power supply

D. Enclosures

E. Power Supply

F. Ethernet network components

1.2 REFERENCES

A. Section 01400 - Quality Requirements: Requirements for references.

B. National Electrical Manufacturers Association (NEMA):

1. ICS 1 - General Standards for Industrial Control Systems.

2. ICS 2 - Standards for Industrial Control Devices, Controllers, and Assemblies.

3. ICS 6 - Enclosures for Industrial Controls and Systems.

4. Standards Publication 250.

C. National Fire Protection Association, Inc. (NFPA): 70 - National Electrical Code.

D. Underwriters Laboratories Inc. (UL).

1.3 ALLOWANCES

A Allowances shall be made for the number of days of commissioning or supervision required for control panel and system installation and startup at the time of bid with no additional payment for startup or commissioning.

1.4 DRAWINGS AND DESIGN

A. Drawings, specifications, and tabulations do not purport to be complete in listing or indicating exact detail. Drawings are intended to show the intention of layout and operation.

B. Final placement of all internal and external panel components is CONTRACTOR's responsibility based on the guidelines provided by the equipment manufacturer.

1.5 REGULATORY REQUIREMENTS

A. Conform to NFPA 70.

B. Furnish products listed and classified by UL as suitable for purpose specified and shown.

1.6 PROGRESS SUBMITTALS

A. Section 01300 - Administrative Requirements: Requirements for progress submittals.

B. Shop Drawings: Submit in accordance with NEMA ICS 1. Include:

1. Prepare as-constructed control panel wiring diagrams to include any changes made during field installation and startup.

C. Product Data: Include for each component showing electrical characteristics and connection requirements.

D. Manufacturer's Instructions: Indicate application conditions and limitations of use stipulated by product testing agency. Include instructions for storage, handling, protection, examination, preparation, and installation of product.

E. Operation and Maintenance Data: Include bound copies of operating and programming instructions, adjustments, and preventative maintenance procedures and materials. Provide six complete copies of the operating and maintenance instructions, including parts lists for all of the equipment. One copy to be single sided for production of additional operation and maintenance manuals. Bind material in sections in hard backed binders.

1.7 CLOSEOUT SUBMITTALS

A. Section 01700 - Execution Requirements: Requirements for closeout submittals.

B. Record Documents: Indicate actual control panel layouts, wiring connections, and wire numbers.

C. Warranties: Completed original warranty forms filled out in OWNER's name and registered with manufacturer. Provide manufacturer's standard warranty.

1.8 QUALIFICATIONS

A. Fabricator: Company specializing in fabrication of control panels with minimum three years documented experience.

PART 2 PRODUCTS

2.1 CONTROL PANEL SCHEDULE

A. *Description*	*Drawing #*
PLC Control Panel	EL-08

B. Fabrication: Shop-fabricate control panels to NEMA ICS 1.

C. Panel dimensions given are the minimum required. Ensure items shown on the general layouts can be mounted within given panel dimensions.

D. Install products in accordance with manufacturer's written instructions.

E. Use minimum control wire sizes as per schematics.

F. Run wires for door mounted items in "expando" type flexible covering. Spiral type wrapping shall not be used. Ground door to enclosure using manufacturer supplied braids and hardware.

G. Run wires in wireway and exit the wireway at the point nearest to the device to which it is wired.

H. Do not splice wires within a wireway.

I. Identify each wire at each termination point using markers bearing the complete wire number in accordance with Section 16075.

J. Neatly harness wires within wireways using tyrap fasteners or approved manufactured wiring organization harnesses.

K. Route AC wiring separately from DC wiring. Make allowance for this in the manufacture of the panel.

L. Verify that the number of terminal blocks is sufficient to make the identified connections. Furnish 20 percent spare terminal blocks.

M. Any steel fasteners shall be hot dip galvanized. Under no circumstances shall interior fasteners penetrate the panel skin.

N. Install programmable controllers furnished in accordance with Section 17451.

O. Provide cabling required to connect the PLC equipment mounted in the panel and as shown on Drawings.

P. Provide service and component identification in accordance with Section 16075.

Q. Wire I/O points and other panel devices point-to-point, if applicable.

R. Wire spare I/O points to terminal blocks and be identified with I/O address, if applicable.

S. Color code wires as per notes on layouts and schematics.

T. Provide all fusing for rail mounted terminal blocks, sized as per schematics.

U. Provide all pre-manufactured programming, control, and communication cables for panel mounted equipment.

V. Provide a 120 VAC duplex outlet mounted inside all panels for local computer programming use. Label outlet "FOR COMPUTER USE ONLY".

2.2 UNINTERRUPTIBLE POWER SUPPLY

A. Supply uninterruptible power supplies for each PLC based control panel; PLC Control Panel-002 as shown on drawings, manufactured by APC (BR1500 Series) or approved equal.

B. Description: UPS shall be true on-line, reverse transfer type, UPS components, controls and backup battery shall be housed in one NEMA 1 enclosure. UPS shall be provided with monitoring means for local PLC to monitor UPS capacity in use and to indicate UPS alarm conditions.

C. UPS shall be of robust construction, suitable for industrial applications and provide clean, regulated AC power (120 V, 60 Hz) to the load.

D. UPS shall provide at least 30 minutes of backup power at full UPS nominal load. Size the UPS to meet the anticipated load demand of all control devices plus 25 percent.

2.3 ENCLOSURES

A. Control Enclosure: NEMA ICS 6 Type 4X for outdoor locations and Type 12 for indoor locations as manufactured by Hoffman or approved equal.

2.4 POWER SUPPLY

A. Provide and mount two industrially rated Power Supplies inside the Main Control Enclosure. Power Supplies shall be SDN Series, as manufactured by Sola, or approved equal. DIN Rail mount, 115 VAC nominal input voltage, 24 VDC nominal output voltage with 2.5 A nominal output current.

2.5 ETHERNET NETWORK

A. Provide and mount industrially rated managed Ethernet switch for the Main Control Enclosure. Switches shall be DRL-380 Series, as manufactured by Brad Communications, or approved equal. Full duplex, 10/100Mbps connection speed, 24 VDC power.

B. Switches shall be supplied with proper copper/fiber ports as necessary for local connections to PC, PLC, variable speed drives, and I/O modules.

C. Supply and terminate all CAT5 Ethernet cables and patch cords as required to interconnect the drives, PLC, PC, and I/O modules to Ethernet switches.

D. Program and configure all devices with IP addresses and subnet masks as supplied by ENGINEER.

2.6 SOURCE QUALITY CONTROL

A. Section 01400 - Quality Requirements.

B. Arrange for inspection of control panel at location of manufacture prior to shipment. Advise ENGINEER at least five working days in advance of inspection.

2.7 SPARE PARTS

A. Provide spare parts as follows:

1. Two fluorescent bulbs for panel lighting.

2. 25% by quantity of each fuse in panel (at least one).

3. One DC power supply

PART 3 EXECUTION

3.1 INSTALLATION

A. Install in accordance with manufacturer's instructions.

B. Do not install products until major construction is complete and building interior is enclosed.

3.2 FIELD QUALITY CONTROL

A. Section 01400 – Quality Requirements: Field inspection and testing. Perform operational testing on control systems to verify proper operation and field connections.

END OF SECTION

SECTION 17451

PROGRAMMABLE CONTROLLERS

PART 1 GENERAL

1.1 SECTION INCLUDES

A. Programmable controllers.

B. Programming software.

C. Cables and accessories.

D. Local operation terminal.

1.2 REFERENCES

A. Section 01400 - Quality Requirements: Requirements for references.

B. National Electrical Manufacturers Association (NEMA):

1. ICS 1 - General Standards for Industrial Control and Systems.

2. ICS 3 - Industrial Systems.

C. National Fire Protection Association, Inc. (NFPA): 70 - National Electrical Code.

D. Underwriters Laboratories Inc. (UL).

1.3 ALLOWANCES

A. Allowances shall be made for the number of days of commissioning or supervision required for installation, startup, and software debug at the time of bid with no additional payment for startup or commissioning.

1.4 REGULATORY REQUIREMENTS

A. Conform to NFPA 70.

B. Furnish products listed and classified by UL as suitable for purpose specified and shown.

1.5 PROGRESS SUBMITTALS

A. Section 01300 - Administrative Requirements: Requirements for progress submittals.

B. Shop Drawings: Indicate electrical characteristics and connection requirements, including layout of completed assemblies, interconnecting cabling, dimensions, weights, and external power requirements.

C. Product Data: Include for each component specified showing electrical characteristics and connection requirements.

D. Manufacturer's Instructions: Indicate application conditions and limitations of use stipulated by product testing agency. Include instructions for storage, handling, protection, examination, preparation, and installation of product.

E. CONTRACTOR shall submit to the ENGINEER layouts of all Operator screens, alarm summaries, databases, and reports along with all PLC software for review and approval at 30% completion, 60% completion, and prior to debug and startup of the system.

1.6 CLOSEOUT SUBMITTALS

A. Section 01700 - Execution Requirements: Requirements for closeout submittals.

B. Record Documents: Indicate actual locations of controller cabinets and input and output devices connected to system; include interconnection wiring and cabling information, and terminal block layouts in controller cabinets.

C. Operation and Maintenance Data: Include bound copies of operating and programming instructions, card replacement, adjustments, and preventative maintenance procedures and materials. Provide six complete copies of the operating and maintenance instructions, including parts lists for all of the equipment. One copy to be single sided for production of additional operation and maintenance manuals. Bind material in sections in hard backed binders.

D. Warranties: Completed original warranty forms filled out in OWNER's name and registered with manufacturer.

1.7 QUALIFICATIONS

A. Programmer: System Integrator specializing in control system programming with minimum 5 years documented experience.

1.8 DELIVERY, STORAGE, AND HANDLING

A. Section 01600 - Product Requirements: Requirements for transporting, handling, storing, and protecting products.

B. Accept products on Site in factory containers. Inspect for damage.

C. Store products in clean and dry area; maintain temperature in accordance with NEMA ICS 1.

1.9 ENVIRONMENTAL REQUIREMENTS

A. Section 01500 - Temporary Facilities and Controls: Requirements for temporary controls.

B. Maintain temperature above 32 degrees F and below 104 degrees F during and after installation of products.

C. Maintain area free of dirt and dust during and after installation of products.

1.10 WARRANTY

A. Section 01600 - Product Requirements: Requirements for warranties.

B. Provide manufacturer's standard warranty.

C. Fill out original warranty forms in OWNER's name and register with manufacturer.

D. Provide one year warranty on PLC and SCADA system custom software functionality.

1.11 SYSTEM STARTUP AND COMMISSIONING

A. Software commissioning and startup shall include, but not be limited to the following:

1. Process control system verification.

2. Operator interface device verification down to final control devices.

3. Systems power fail/restart testing to verify proper operation.

4. Verification of alarms and interlocks.

5. Loop Tuning

1.12 SOFTWARE PROGRAMMING

A. The drawings define the basic functional requirements of the control system. CONTRACTOR shall augment these functions as necessary to achieve a complete functional system. The CONTRACTOR shall provide fully operational and documented software for the PLC and SCADA Workstation. The software shall include all necessary logic, timing, filtering, deadbands, debouncing, mathematical, data handling, alarms and communication functions required to give smooth, reliable, safe control of the equipment.

B. General PLC Requirements:

1. Develop application software using Rockwell Software RSLogix 5000 programming software.

2. The overall PLC control program shall be divided into different tasks, utilizing subroutine files to segment a section of code that is particular to a specific function/device in the process.

3. For optimal system communications, all PLC data of the same type shall be assigned (mapped) to contiguous memory locations in a single data type arrays for the Panelview Plus and SCADA interface.

4. Develop Autodialer functionality logic to map alarms to the shared database as required. Configure the Autodialer for proper operation with the PLC.

C. General SCADA Interface Requirements:

1. Operator station software shall provide functionality as per drawings and 30% / 60%/ 90% review comments. This includes, but is not limited to the following:

1. Graphical viewing and control of processes.

2. Manual override where indicated and/or appropriate.

3. Historical and dynamic trending.

4. Alarm reporting and management.

5. Report generation.

6. Definition and construction of dynamic color graphic displays.

2. Provide a graphic user interface such that users shall be able to start and stop equipment or change setpoints from graphic displays through the use of a mouse and "point and click" operation.

3. Develop the SCADA application using Allen-Bradley RSView Studio software.

4. Design an efficient operator interface by making the following screen considerations: function key layout, alarm status line, time and date field, screen title, and menu selections.

D. SCADA Collection and Analysis of Historical Data:

1. Provide trending capabilities that allow the user to easily monitor and preserve records of system activity over an extended period of time. Any system point may be trended automatically at time-based intervals or changes of value, both of which shall be user-definable. Trend data may be stored on hard disk for future diagnostics and reporting.

2. Trend graphic displays shall be provided to allow the user to view all trended point data. Displays shall be actual plots of both static and/or real-time dynamic point data and may be customized to include individual points or predefined groups of at least four points. Provide additional functionality/configuration to allow any trended data to be transferred easily to Microsoft Excel. This shall allow the user to perform custom calculations such as energy usage, equipment efficiency chemical costs, and shall allow for generation of these reports on high quality plots, graphs, and charts.

3. CONTRACTOR shall, collectively with ENGINEER, determine the interval at which all trended data shall be stored on the SCADA computer hard drive.

E. SCADA Dynamic Color Graphic Displays:

1. Provide a complete set of color graphic displays based on flow sheets. All points on Attachment 1 - PLC I/O List and associated variables and parameters shall be dynamically displayed. However, no graphic display shall contain an excessive quantity of information so as to create unnecessary confusion for the operator. CONTRACTOR shall allow in his work a block of time for cooperatively defining OWNER's specific preferences for graphic display layout and organization.

2. Color conventions for graphic displays, pushbutton function, and device state or operating conditions shall be provided.

3. Provide an operator interface with a consistent look and feel. All displays should adhere to a common screen format and generally be organized in a consistent screen hierarchy that follows the flow of the process.

4. Provide an operator interface that allows users to access the various system schematics by graphical penetration or menu selection scheme. The graphical penetration scheme shall present a schematic overview as the top-level screen, then process unit schematics, then individual point, equipment, or control parameter details. A consistent screen navigation methodology shall be applied.

5. Dynamic values and equipment status shall be shown in their actual respective locations and shall automatically update to represent current conditions without operator intervention.

6. Graphic development software shall be provided to allow the user to add, modify, or delete system graphic displays.

1.13 SPARES

A. Provide one of each type of PLC I/O module and power supply for spares inventory.

PART 2 PRODUCTS

2.1 MANUFACTURERS

A. Allen-Bradley. No other acceptable manufacturers.

2.2 PROGRAMMABLE CONTROLLERS

A. Controller Requirements: The PLCs shall be Allen-Bradley CompactLogix with 1769 Series I/O as per control panel drawings and schematics. The PLC equipment is to be supplied and installed in control panels as shown on Drawings.

B. Appropriate terminal block housings and wiring harnesses is to be supplied with I/O cards and modules as appropriate for the type of card as per manufacturer's instructions.

C. Input/Output Schedule: Specific points are indicated on the Drawings and summarized in Attachment 1, PLC I/O List, appended to this Section.

D. System Configuration:

1. General Configuration: Main Control Panel:

Allen-Bradley Cat. No.	*Description*	*Quantity*
1769-L32E	CompactLogix Processor	1
1769-PA4	Power Supply	as required
1784-CF64	Compact Flash Memory	1
1769-IF8	4-20 mA, 8 pt. analog input	as required
1769-OF8C	4-20 mA, 8 pt. analog output	as required
1769-IQ16	24 VDC, 16 point input	as required
1769-OB16	24 VDC Sourcing, 16 point output	as required
Assorted	Cables, Interface Modules, Endcaps	as required

2.3 SCADA COMPUTER

A. The CONTRACTOR shall supply, program and install a desktop PC systems consisting of PC, monitor, keyboard and mouse.

B. The minimum PC hardware requirements are as follows:

1. Intel Core 2 Duo Processor E8400, 3.00 GHz, 6M, 1333 MHz FSB, with 3 GB DDR2 Non-ECC SDRAM, 800 MHz, (3 DIMM) memory.

2. Boot Drive - 160GB 3.5" SATA 3.0Gb/s and 8MB DataBurst Cache™.

3. Second Drive Option - 160GB 3.5" SATA 3.0Gb/s and 8MB DataBurst Cache™.

4. RAID 1 Hard Drive Mode.

5. 16X DVD-ROM, Cyberlink Power DVD™.

6. Integrated Video, Intel® GMA 4500.

7. 8 USB ports with at least two ports on the front.

8. Broadcom NetXtreme 10/100/1000 PCIe Gigabit Networking Card, Full Height (two cards per PC).

9. Mini-tower case, with standard power supply, operating from 120 VAC power.

10. Basic 3-year limited hardware warrantee.

11. Warranty and 3-Year NBD Onsite Support Service.

12. Chassis intrusion switch option.

13. Dell USB Optical Mouse with Scroll, All Black Design.

14. Dell Quitekey keyboard, no Hot Keys, English, Black.

15. 21-inch Wide Screen color graphics monitor.

C. The PC shall be provided with a licensed copy of Microsoft XP Professional on it.

D. The PC system shall be an OPTIPLEX 960 MT as manufactured by Dell or approved equal.

2.4 PROGRAMMING ACCESSORIES

A. PLC Programming Software: Provide RSLogix 5000, RSLinx Classic programming licenses. The licenses shall be registered in the OWNER’s name.

B. SCADA Programming Software: Provide RSView Studio Screen Development and RSView Machine Edition Runtime Software, and RSLinx Enterprise licenses. The licenses shall be registered in the OWNER’s name.

C. Provide all pre-manufactured programming, control, and communication cables for interconnecting all panel-mounted, field, and SCADA equipment.

PART 3 EXECUTION

3.1 INSTALLATION

A. Install in accordance with manufacturer's instructions.

B. Do not install products until major construction is complete and building interior is enclosed.

C. Connect input and output devices in accordance with Section 17431.

3.2 FIELD QUALITY CONTROL

A. Section 01400 - Quality Requirements: Field inspection and testing. Perform operational testing on control systems to verify proper operation and field wiring connections.

3.3 ADJUSTING

A. Section 01700 - Execution Requirements: Requirements for adjusting installed work.

B. Adjust process setpoints, alarm setpoints, timers, and durations as directed by ENGINEER.

C. Tune all control loops as directed by ENGINEER.

3.4 DEMONSTRATION

A. Section 01770 - Facility Operation: Requirements for demonstrating installed work.

B. Demonstrate the operation and programming of PLC controllers, including Ethernet communications. A PLC and SCADA software functionality testing and signoff sheet shall be developed by the CONTRACTOR, subject to approval by the ENGINEER. All aspects of system operation, display, communications, and SCADA operation shall be demonstrated in the presence of the ENGINEER in accordance with the testing and signoff sheet. Any modifications made to the system software due to insufficient testing and demonstration may nullify any previous system tests at the discretion of the ENGINEER.

C. Provide 16 hours of instruction each for two persons, to be conducted at Site with programmer.

END OF SECTION