US EPA ARCHIVE DOCUMENT

CONTAINS CONFIDENTIAL BUSINESS INFORMATION

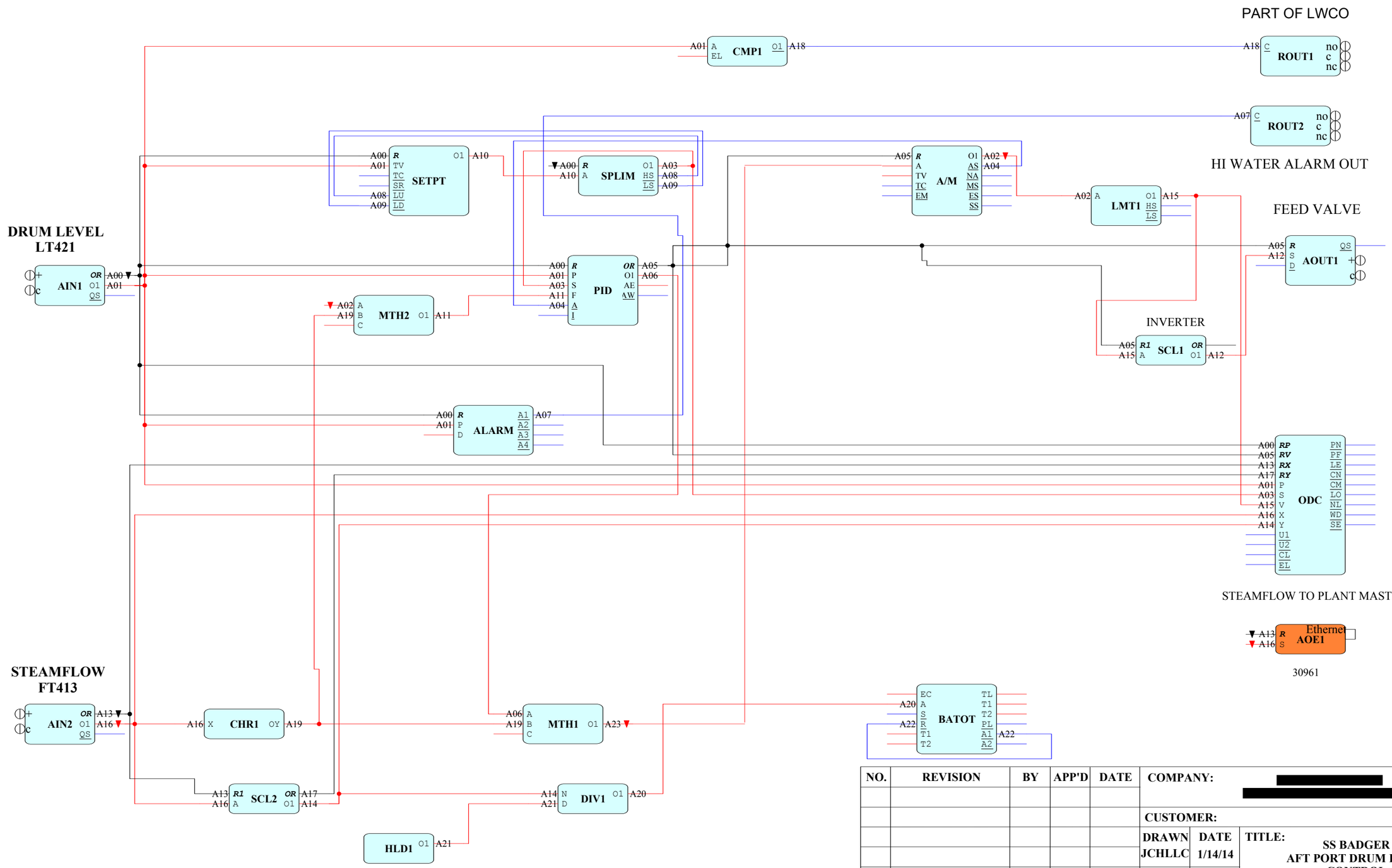

NO.	REVISION	BY	APP'D	DATE	COMPANY: [redacted]		
					CUSTOMER:		
					DRAWN JCHLLC	DATE 1/14/14	TITLE: SS BADGER AFT PORT DRUM LEVEL CONTROL
					APP'D	DATE	
							DRWG NO.:

CONTAINS CONFIDENTIAL BUSINESS INFORMATION

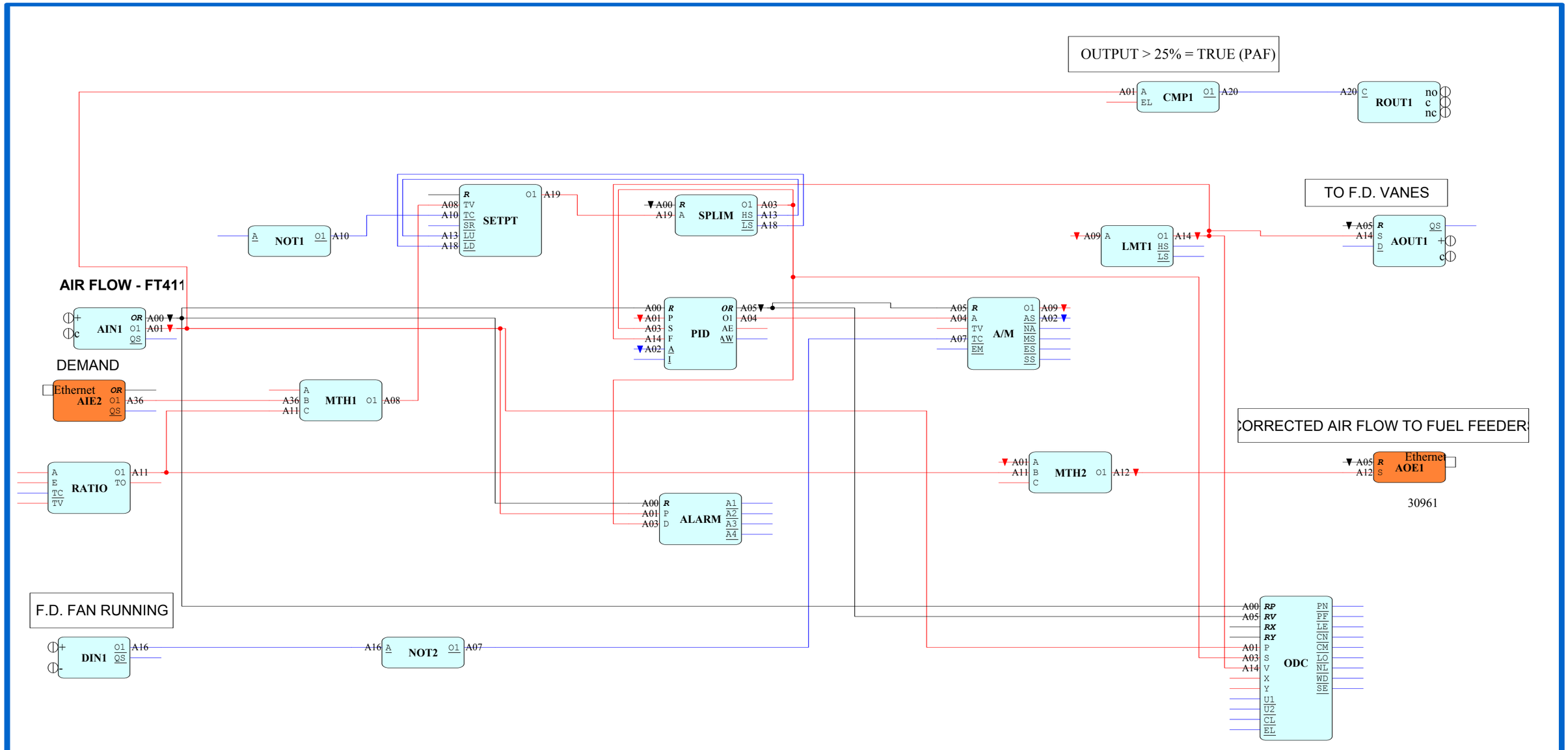

NO.	REVISION	BY	APP'D	DATE	COMPANY: [redacted]
				1	
					CUSTOMER:
					DRAWN JCHLLC / DATE 1/14/14 / TITLE: SS BADGER AFT PORT FD AIR FLOW CONTROL
					APP'D / DATE
					DRWG NO.:

CONTAINS CONFIDENTIAL BUSINESS INFORMATION

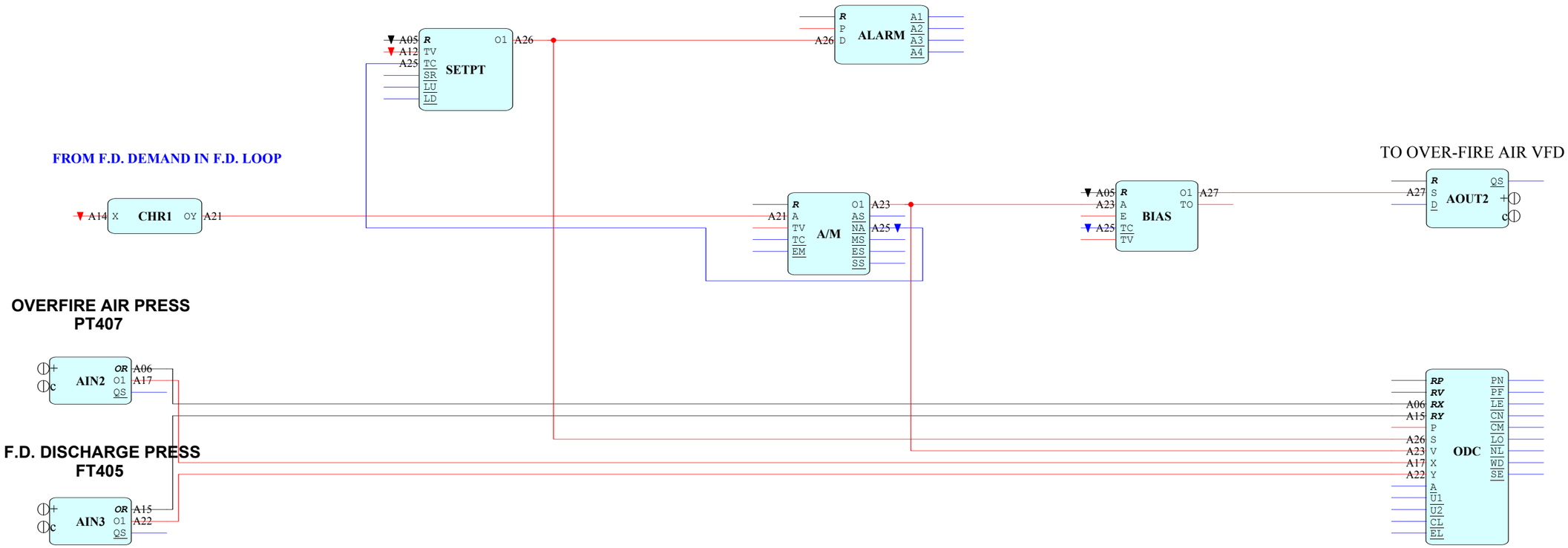

NO.	REVISION	BY	APP'D	DATE	COMPANY: [redacted]		
					CUSTOMER:		
					DRAWN JCH	DATE 8/13/13	TITLE: SS BADGER AFT PORT OVERFIRE AIR LOOP
					APP'D	DATE	
							DRWG NO.:

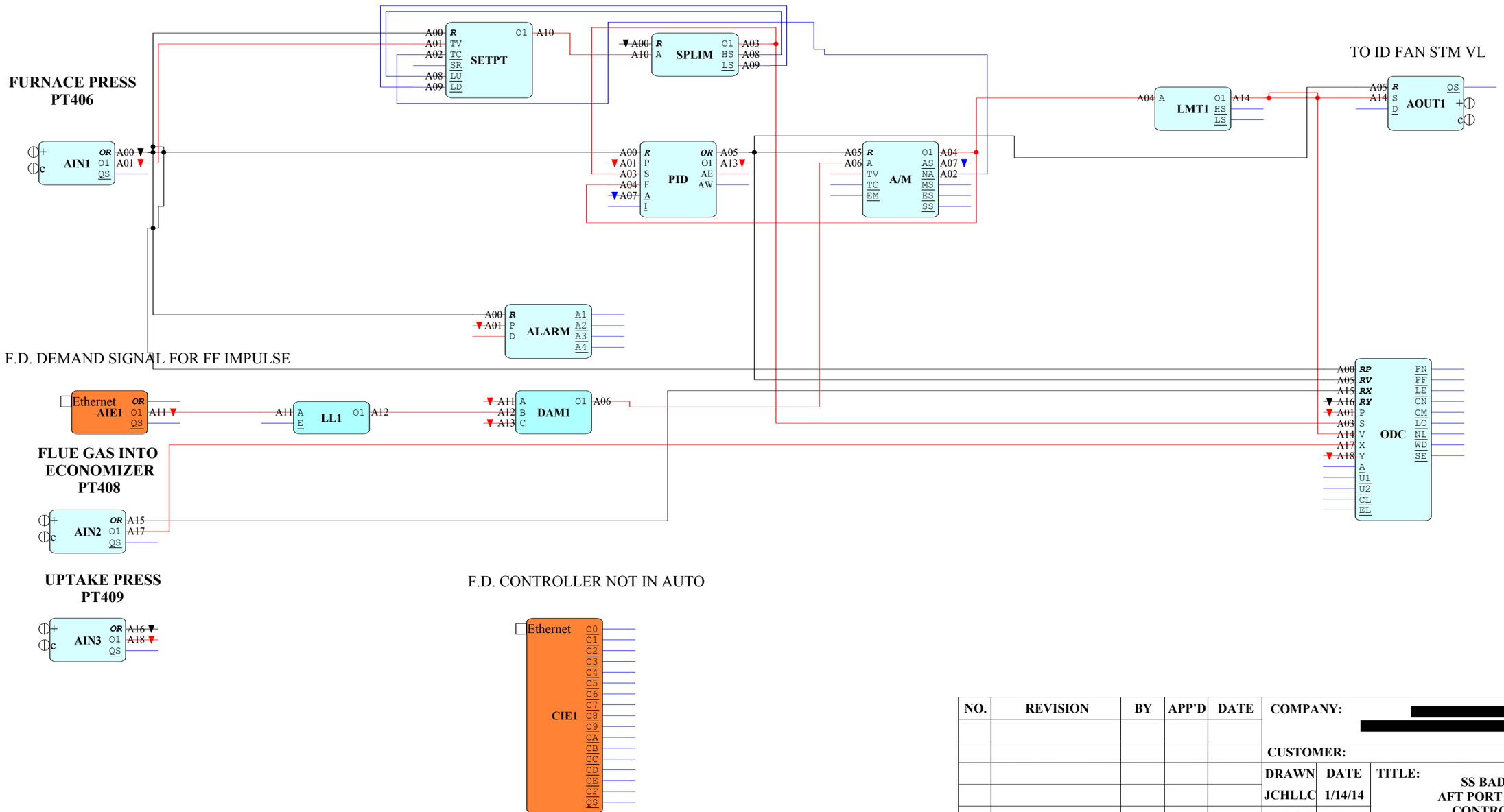

NO.	REVISION	BY	APP'D	DATE	COMPANY: [redacted]
					CUSTOMER:
					DRAWN JCHLLC / DATE 1/14/14 / TITLE: SS BADGER AFT PORT I.D. FAN CONTROLLER
					APP'D / DATE
					DRWG NO.:

CONTAINS CONFIDENTIAL BUSINESS INFORMATION

CONTAINS CONFIDENTIAL BUSINESS INFORMATION

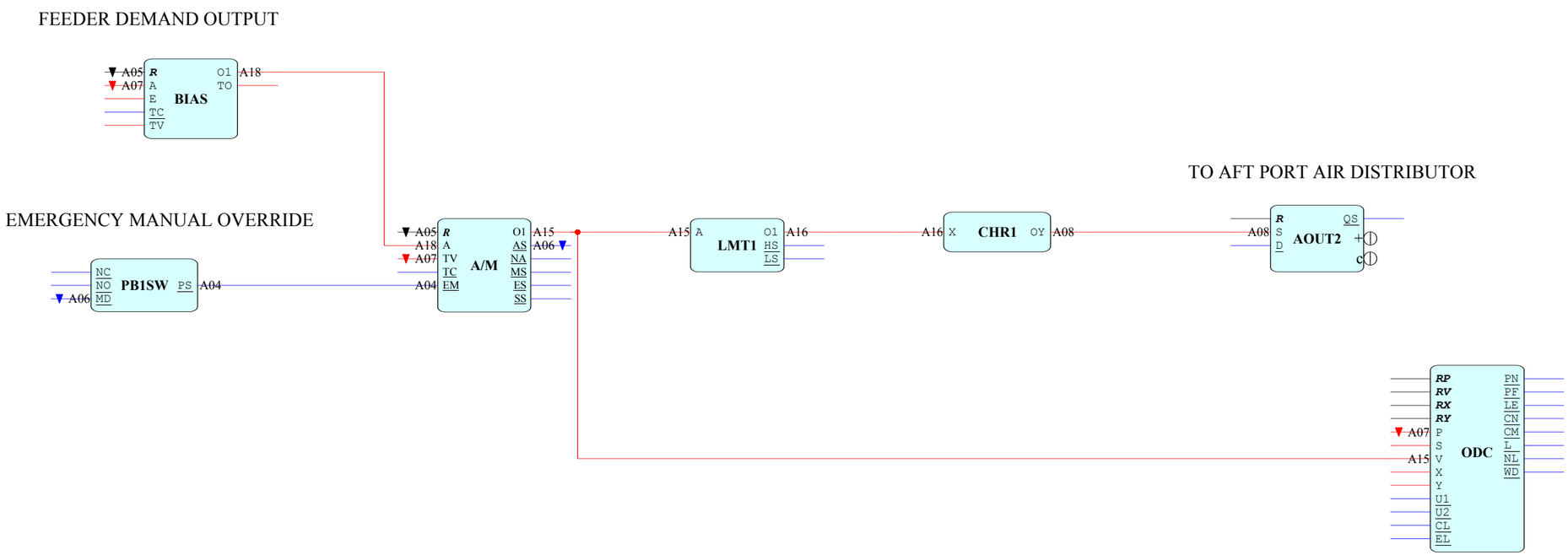

NO.	REVISION	BY	APP'D	DATE	COMPANY: [redacted]		
					CUSTOMER:		
					DRAWN JCHLLC	DATE 1/15/14	TITLE: SS BADGER AFT PORT AIR DISTRIBUTOR
					APP'D	DATE	
							DRWG NO.:

CONTAINS CONFIDENTIAL BUSINESS INFORMATION

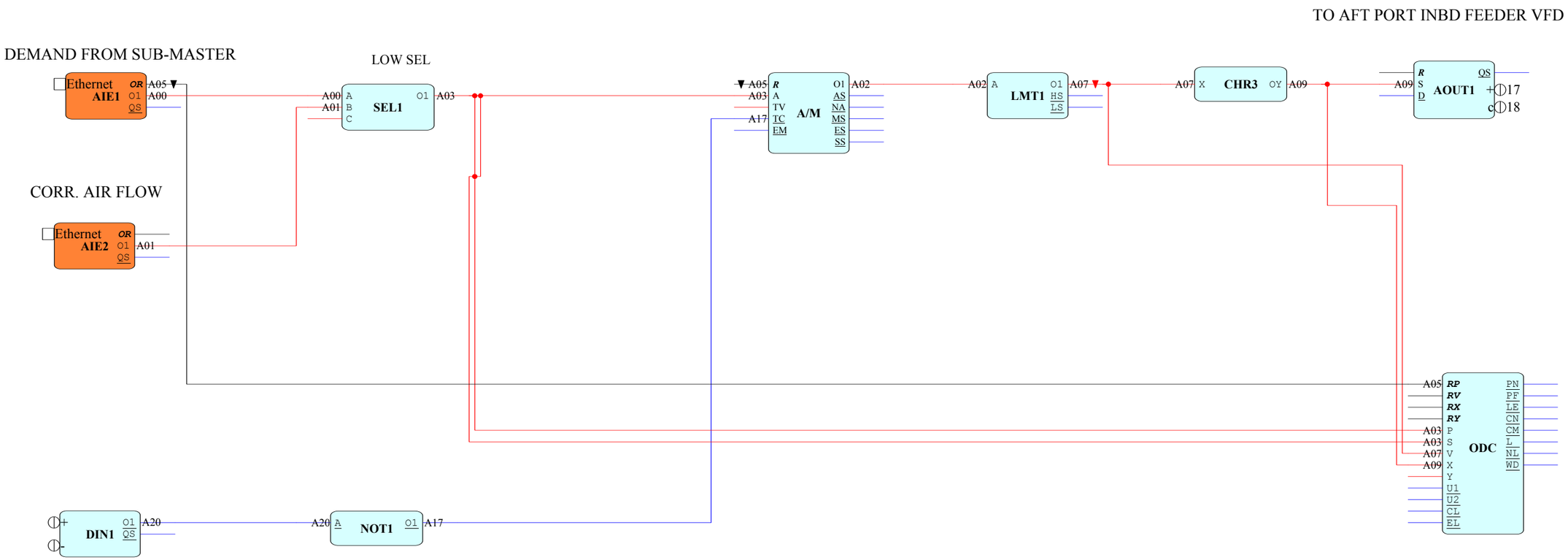

NO.	REVISION	BY	APP'D	DATE

COMPANY: [redacted]

CUSTOMER:

DRAWN	DATE
JCHLLC	1/15/14
APP'D	DATE

TITLE: SS BADGER AFT PORT INBOARD COAL FEEDER

DRWG NO.:

CONTAINS CONFIDENTIAL BUSINESS INFORMATION

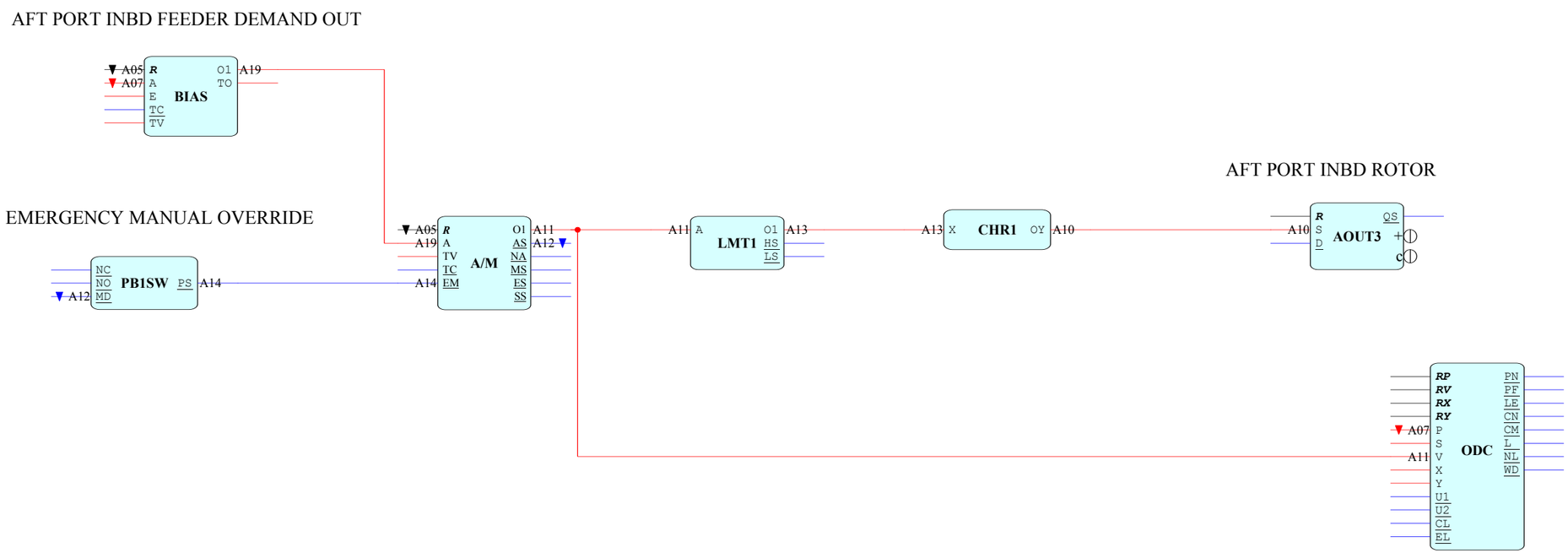

NO.	REVISION	BY	APP'D	DATE	COMPANY: [redacted]		
					CUSTOMER:		
					DRAWN JCHLLC	DATE 1/15/14	TITLE: SS BADGER AFT PORT INBD ROTOR LOOP
					APP'D	DATE	
							DRWG NO.:

CONTAINS CONFIDENTIAL BUSINESS INFORMATION

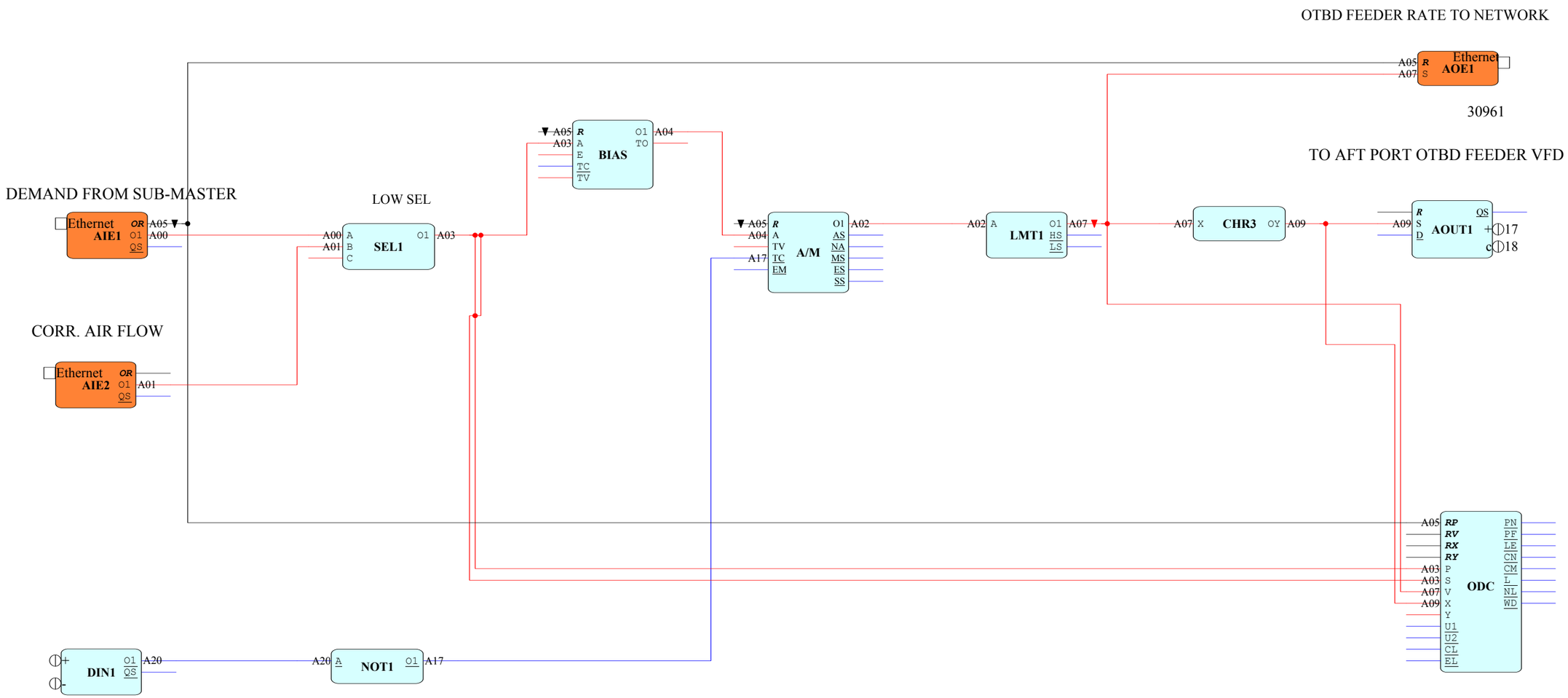

NO.	REVISION	BY	APP'D	DATE

COMPANY: [redacted]

CUSTOMER:

DRAWN	DATE
JCHLLC	1/15/14
APP'D	DATE

TITLE: SS BADGER AFT PORT OUTBOARD COAL FEEDER

DRWG NO.:

CONTAINS CONFIDENTIAL BUSINESS INFORMATION

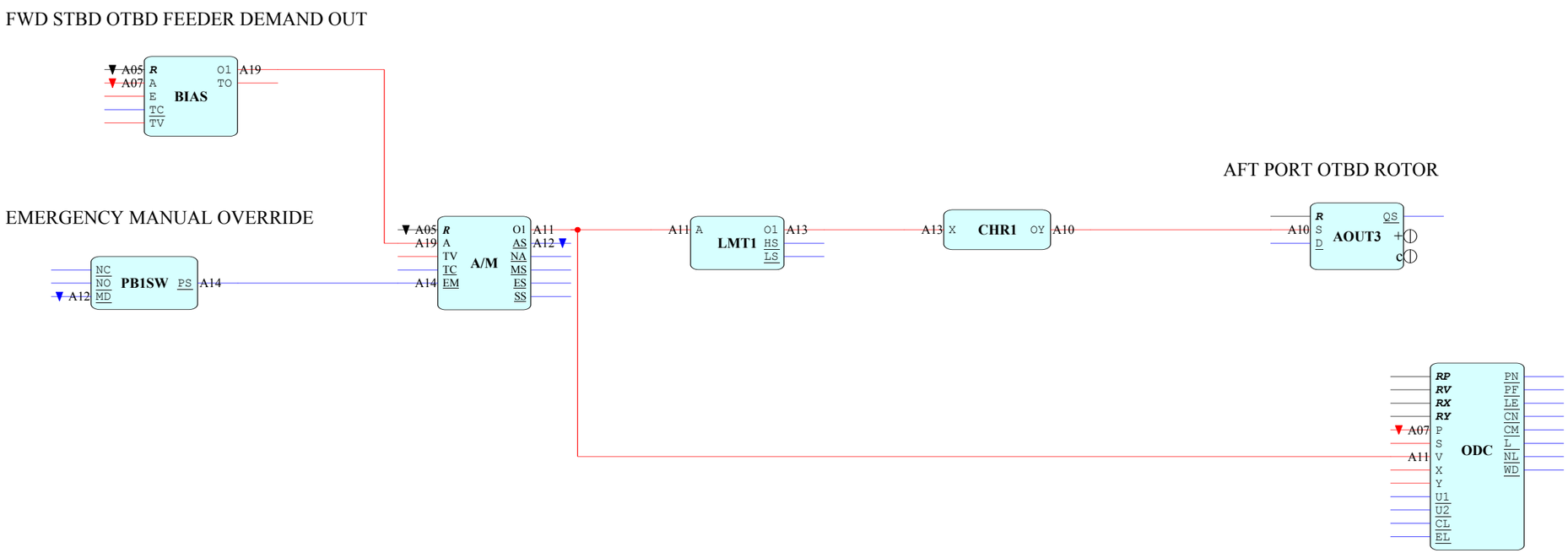

NO.	REVISION	BY	APP'D	DATE	COMPANY: [redacted]		
					CUSTOMER:		
					DRAWN JCHLLC	DATE 1/15/14	TITLE: SS BADGER AFT PORT OUTBOARD ROTOR LOOP
					APP'D	DATE	
							DRWG NO.:

CONTAINS CONFIDENTIAL BUSINESS INFORMATION

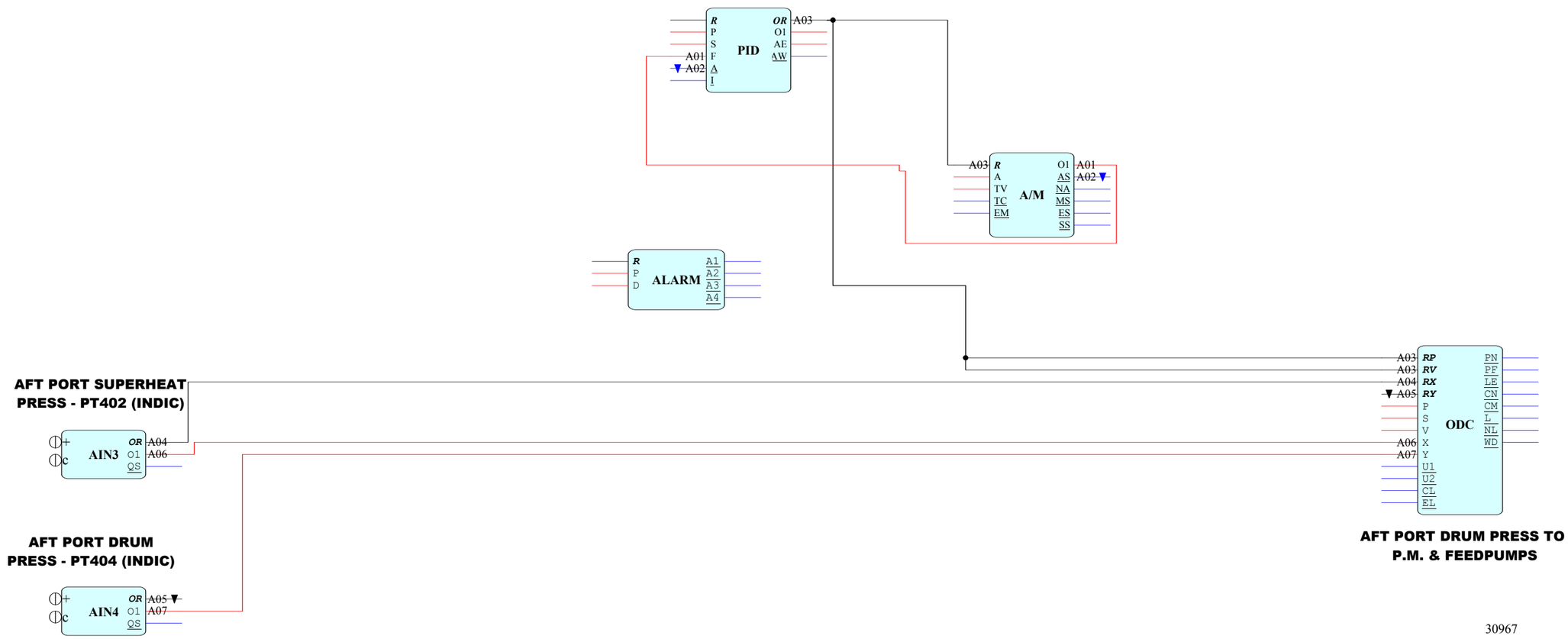

30967

NO.	REVISION	BY	APP'D	DATE	COMPANY: [redacted]		
					CUSTOMER:		
					DRAWN JCHLLC	DATE 1/24/14	TITLE: SS BADGER AFT PORT BLR STEAM PRESS LOP
					APP'D	DATE	
							DRWG NO.:

CONTAINS CONFIDENTIAL BUSINESS INFORMATION

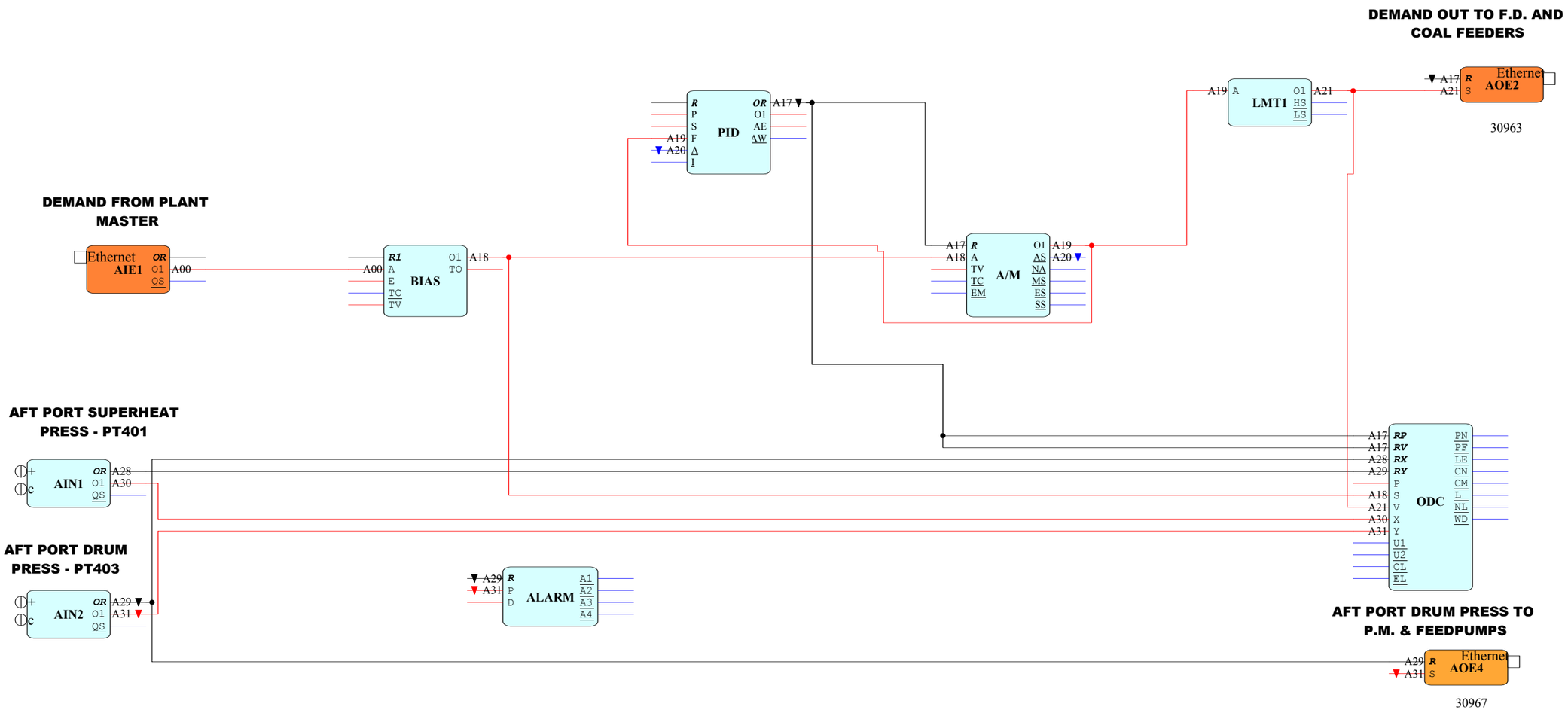

NO.	REVISION	BY	APP'D	DATE	COMPANY: [redacted]		
					CUSTOMER:		
					DRAWN JCHLLC	DATE 1/14/14	TITLE: SS BADGER AFT PORT BLR SUB-MASTER W/ BIAS
					APP'D	DATE	
							DRWG NO.:

CONTAINS CONFIDENTIAL BUSINESS INFORMATION

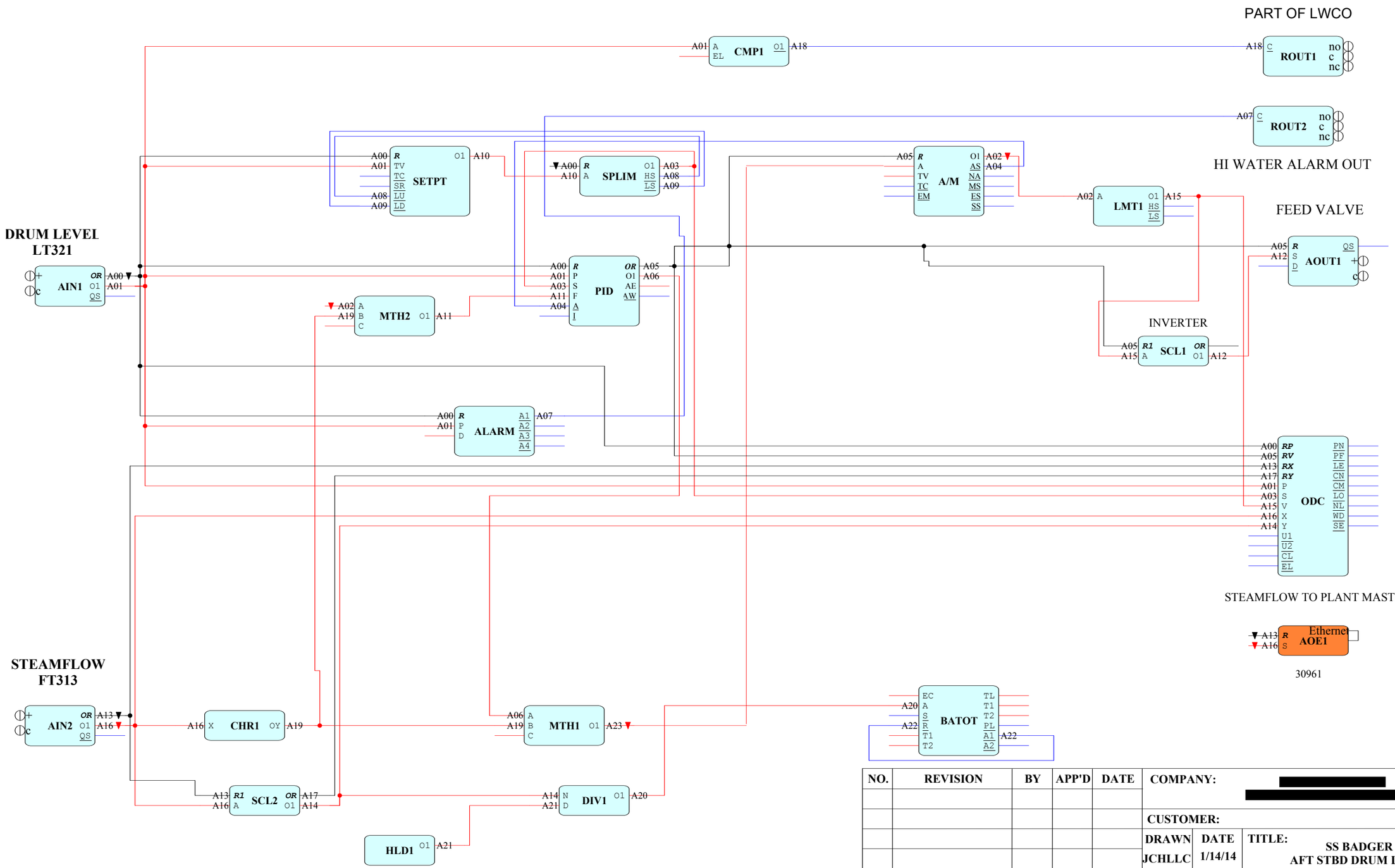

NO.	REVISION	BY	APP'D	DATE	COMPANY: [redacted]		
					CUSTOMER:		
					DRAWN JCHLLC	DATE 1/14/14	TITLE: SS BADGER AFT STBD DRUM LEVEL CONTROL
					APP'D	DATE	
							DRWG NO.:

CONTAINS CONFIDENTIAL BUSINESS INFORMATION

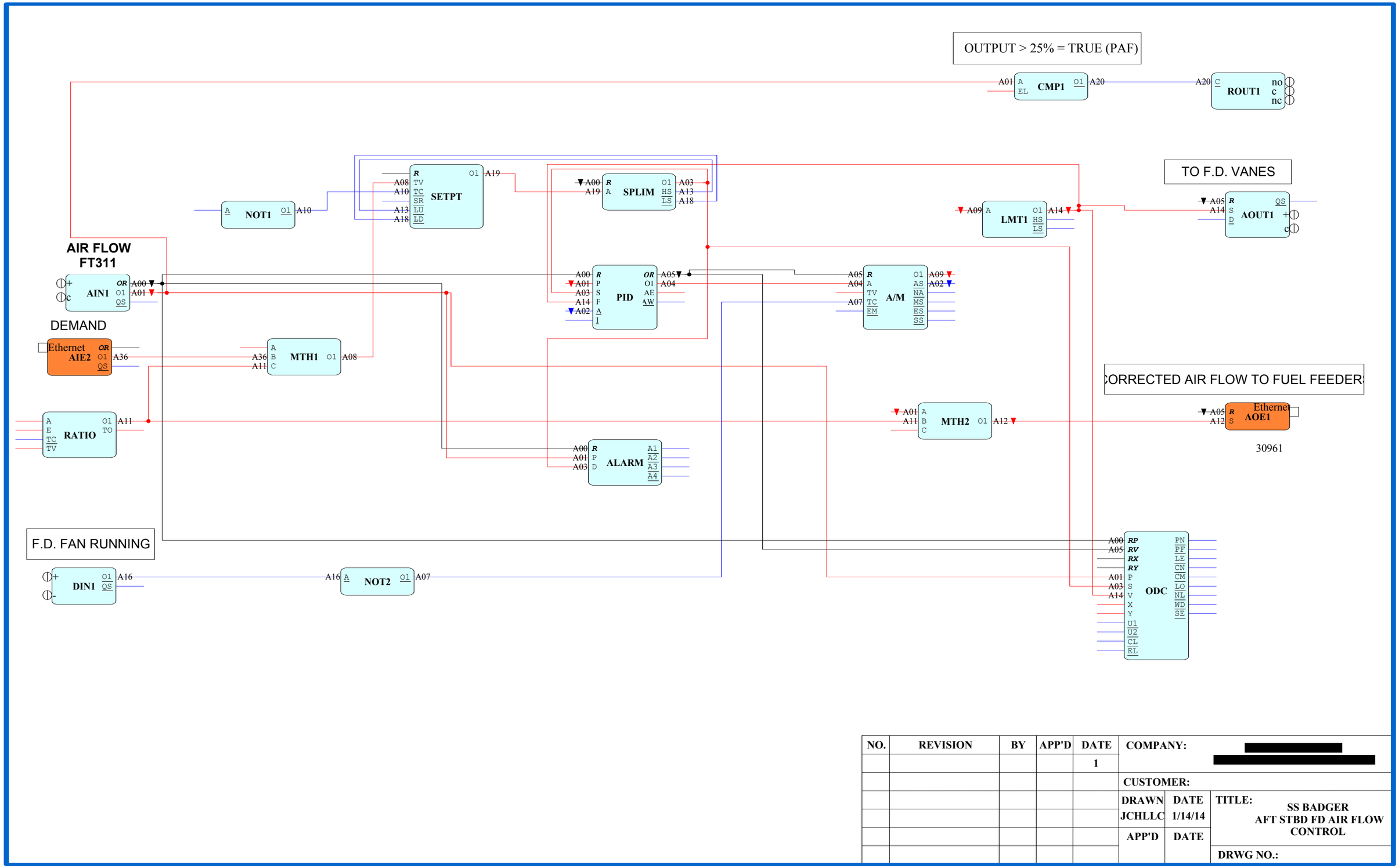

NO.	REVISION	BY	APP'D	DATE	COMPANY: [redacted]
				1	
					CUSTOMER:
					DRAWN JCHLLC / DATE 1/14/14 / TITLE: SS BADGER AFT STBD FD AIR FLOW CONTROL
					APP'D / DATE
					DRWG NO.:

CONTAINS CONFIDENTIAL BUSINESS INFORMATION

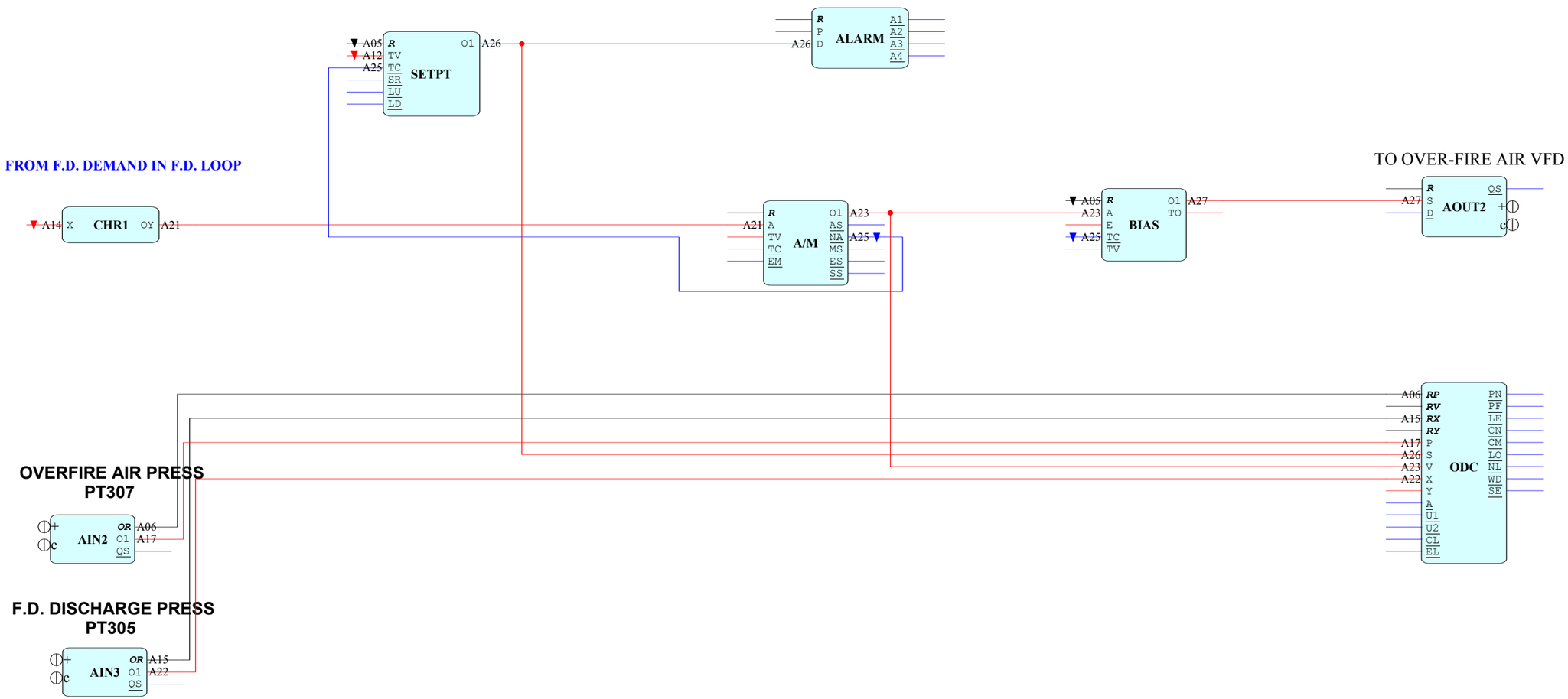

NO.	REVISION	BY	APP'D	DATE	COMPANY: [redacted]		
					CUSTOMER:		
					DRAWN	DATE	TITLE: SS BADGER AFT STBD OVERFIRE AIR LOOP
					JCHLLC	1/14/14	
					APP'D	DATE	
							DRWG NO.:

CONTAINS CONFIDENTIAL BUSINESS INFORMATION

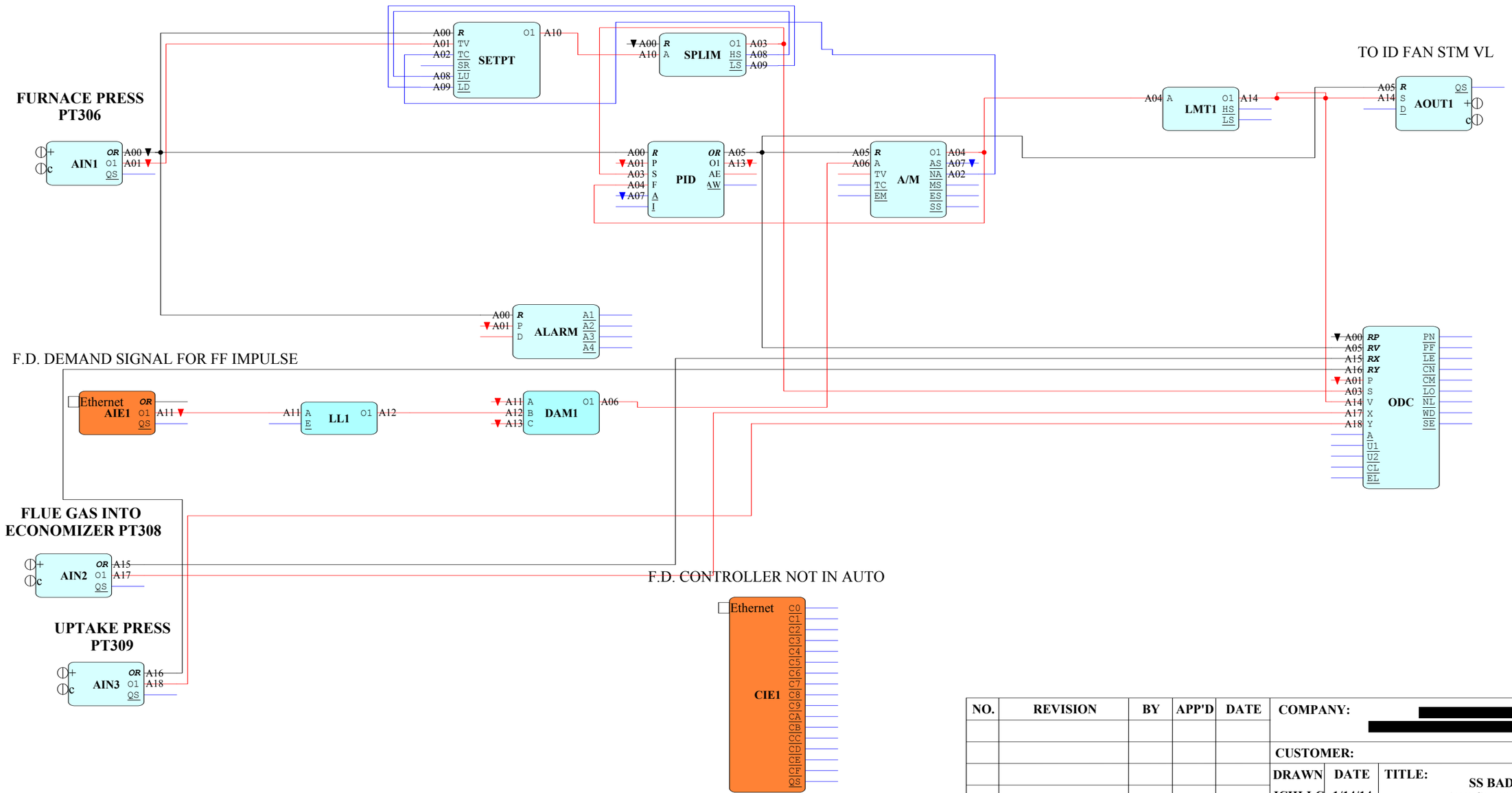

NO.	REVISION	BY	APP'D	DATE	COMPANY: [redacted]
					CUSTOMER:
					DRAWN JCHLLC / DATE 1/14/14 / TITLE: SS BADGER AFT STBD I.D. FAN CONTROLLER
					APP'D / DATE
					DRWG NO.:

CONTAINS CONFIDENTIAL BUSINESS INFORMATION

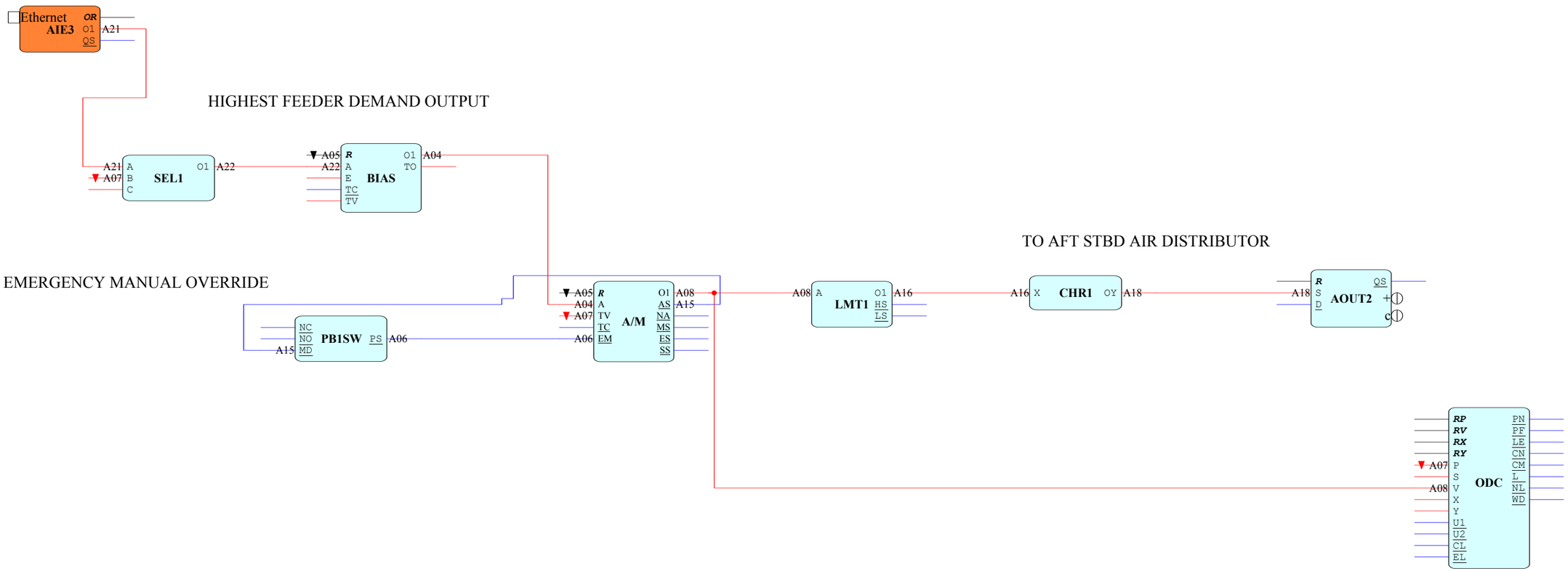

NO.	REVISION	BY	APP'D	DATE	COMPANY: [redacted]		
					CUSTOMER:		
					DRAWN JCHLLC	DATE 1/15/14	TITLE: SS BADGER AFT STBD AIR DISTRIBUTOR
					APP'D	DATE	
							DRWG NO.:

CONTAINS CONFIDENTIAL BUSINESS INFORMATION

REV.

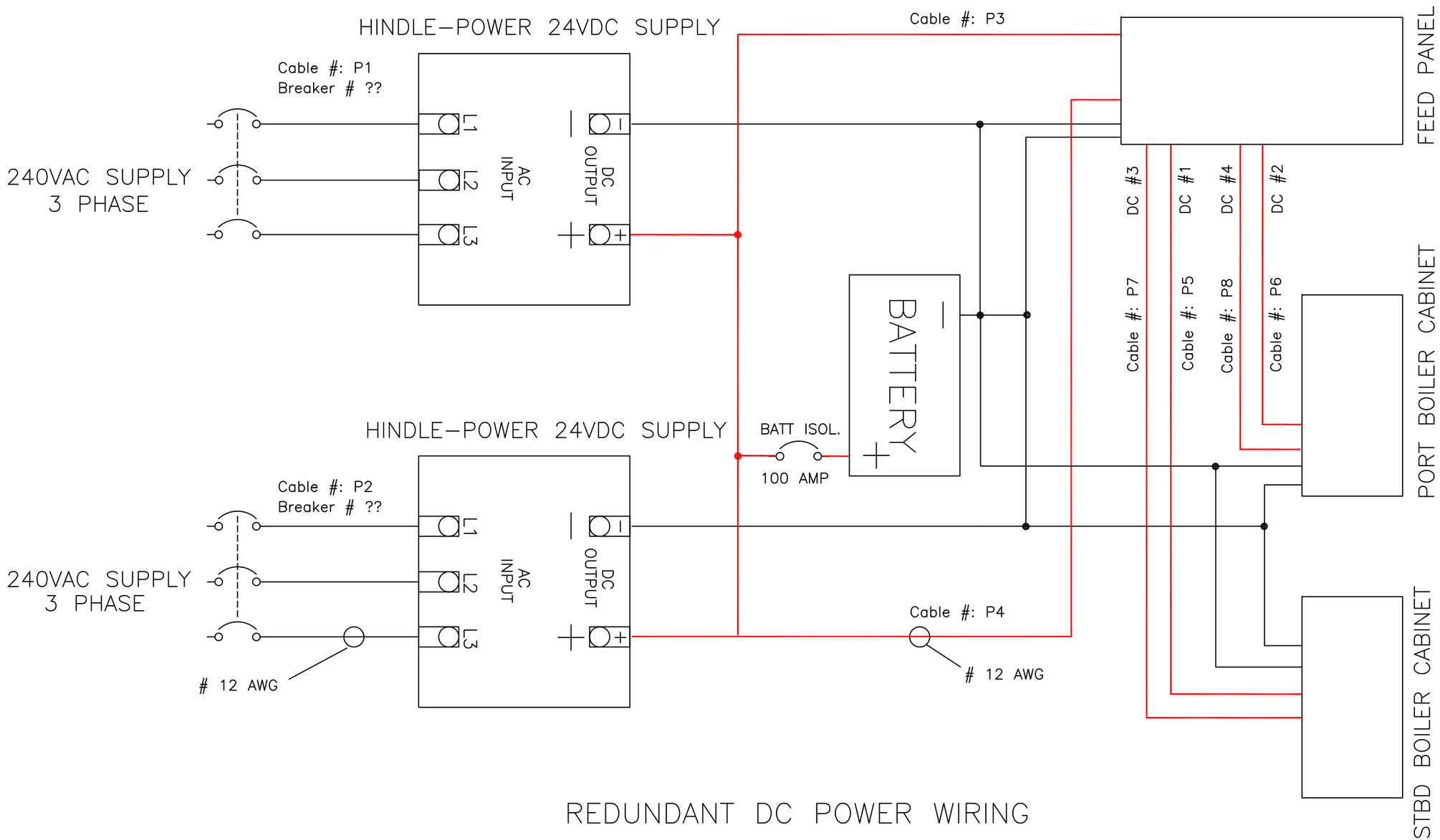

REDUNDANT DC POWER WIRING

[redacted]

SS BADGER
24VDC BATTERY–BACKED POWER

©

DRAWING NAME:		DRAWING NO:
BY: JCHLLC	DATE: 2/19/14	SHEET ___ OF ___

US EPA ARCHIVE DOCUMENT

US EPA ARCHIVE DOCUMENT

CONTAINS CONFIDENTIAL BUSINESS INFORMATION

REV.

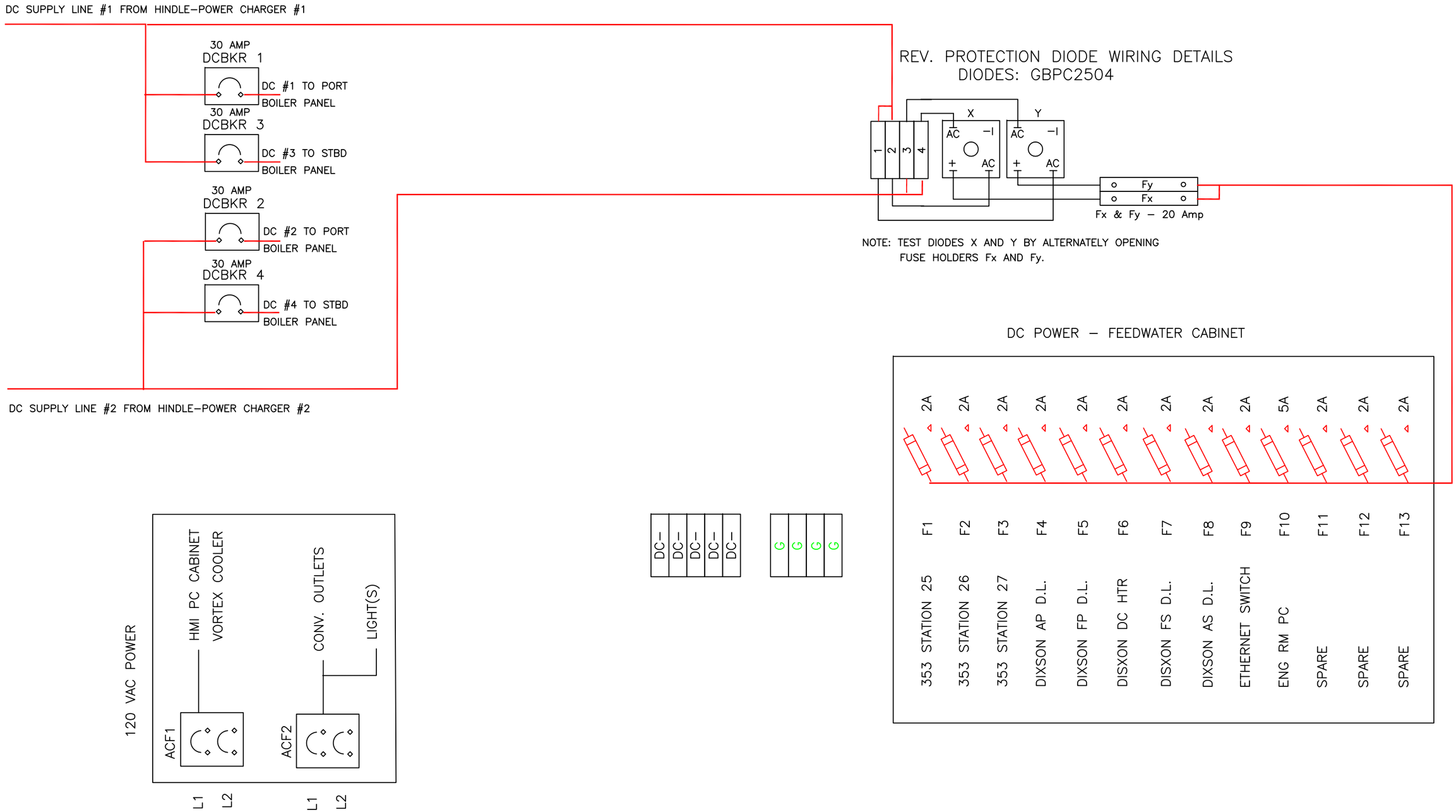

[redacted]

BADGER FEEDWATER PANEL WIRING

©

DRAWING NAME: FEEDPWR.DWG		DRAWING NUMBER:
BY: JCHLLC:	DATE: 2/3/14	SHEET ___ OF ___

US EPA ARCHIVE DOCUMENT

CONTAINS CONFIDENTIAL BUSINESS INFORMATION

REV.
1. 2/20/14 – ADDED 2ND DIODE SET.

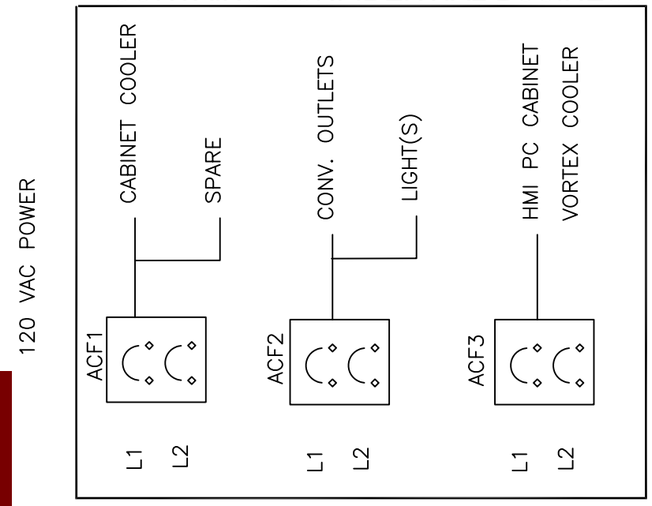

REV. PROTECTION DIODE WIRING DETAILS
DIODES: GBPC2504

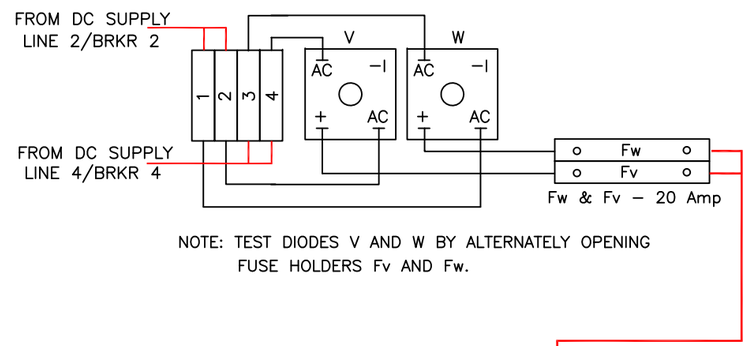

NOTE: TEST DIODES V AND W BY ALTERNATELY OPENING FUSE HOLDERS Fv AND Fw.

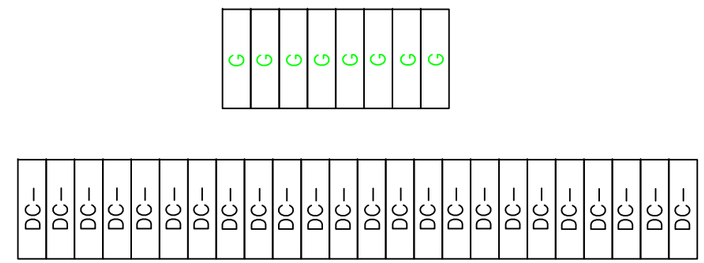

DC POWER – PORT BOILER CABINET

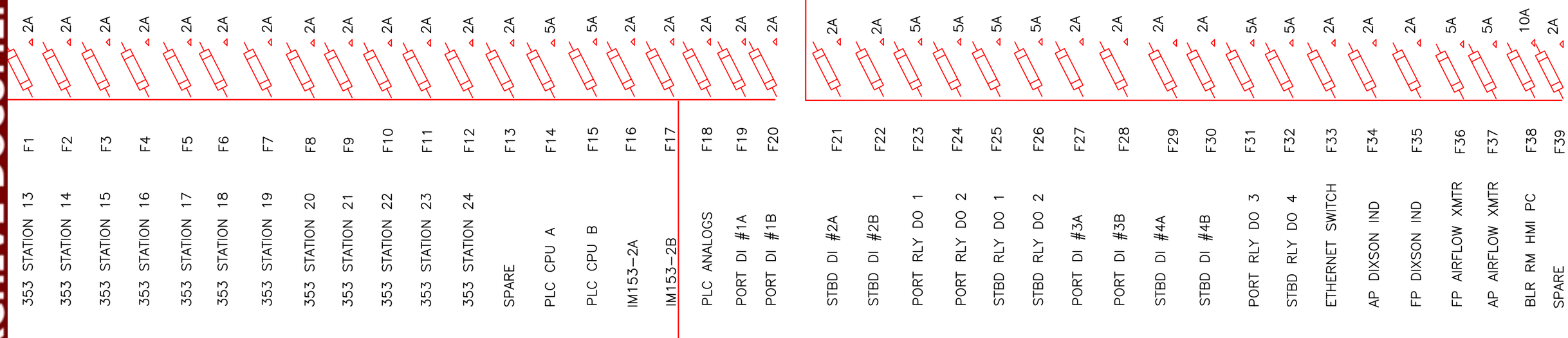

REV. PROTECTION DIODE WIRING DETAILS
DIODES: GBPC2504

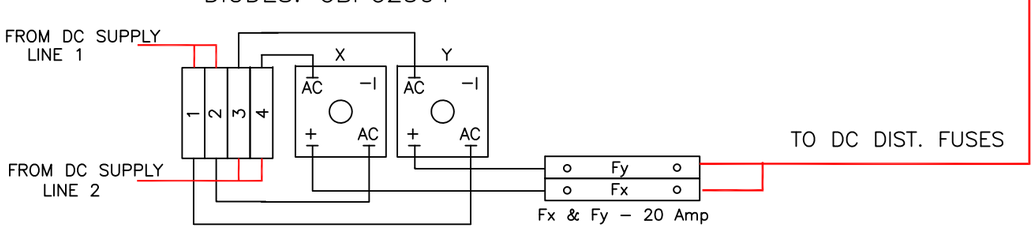

NOTE: TEST DIODES X AND Y BY ALTERNATELY OPENING FUSE HOLDERS Fx AND Fy.

DIODE CIRCUIT SCHEMATIC – TWO SETS

REVERSE POLARITY PROTECTION DIODES MODEL: GBPC2504
EMPLOYS ONE SIDE EACH, REDUNDANT BRIDGE RECTIFIERS

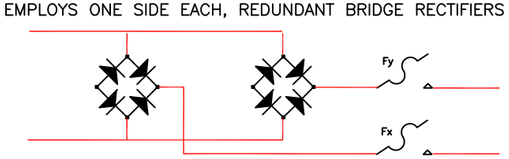

[redacted]

BADGER BOILER PANEL WIRING
PORT PANEL POWER DISTRIBUTION

©

DRAWING NAME: PORTPWR.DWG		DRAWING NUMBER:
BY: JCHLLC:	DATE: 1/31/14	SHEET ___ OF ___

CONTAINS CONFIDENTIAL BUSINESS INFORMATION

REV.

US EPA ARCHIVE DOCUMENT

REV. PROTECTION DIODE WIRING DETAILS
DIODES: GBPC2504

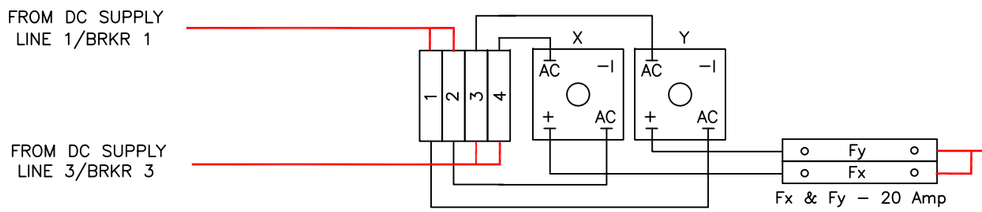

NOTE: TEST DIODES X AND Y BY ALTERNATELY OPENING
FUSE HOLDERS Fx AND Fy.

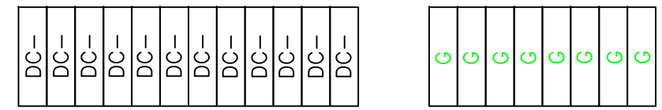

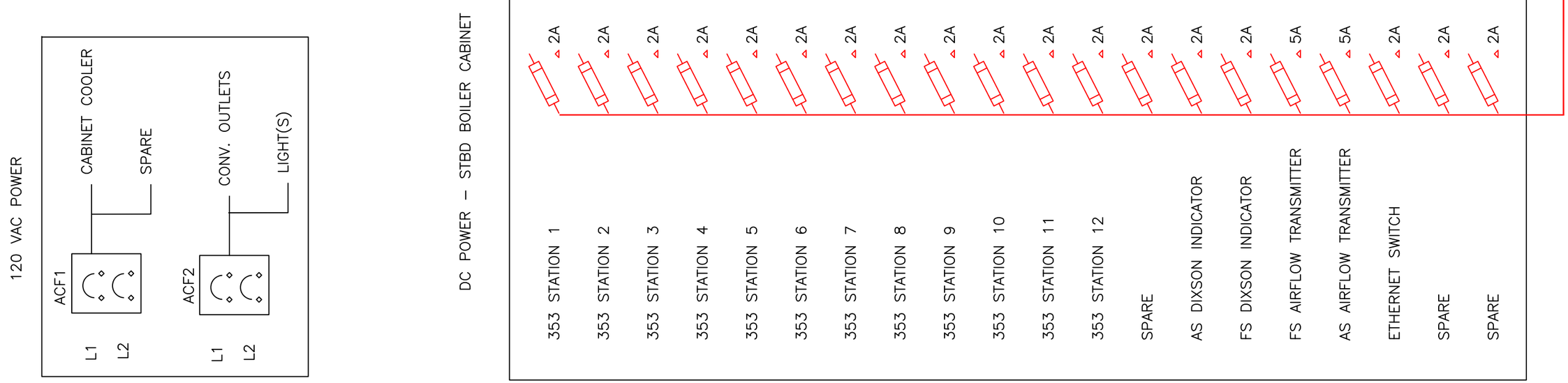

[redacted]

BADGER BOILER PANEL WIRING
STBD PANEL POWER DISTRIBUTION

©

DRAWING NAME: STBDPWR.DWG		DRAWING NUMBER:
BY: JCHLLC:	DATE: 1/31/14	SHEET ___ OF ___

CONTAINS CONFIDENTIAL BUSINESS INFORMATION

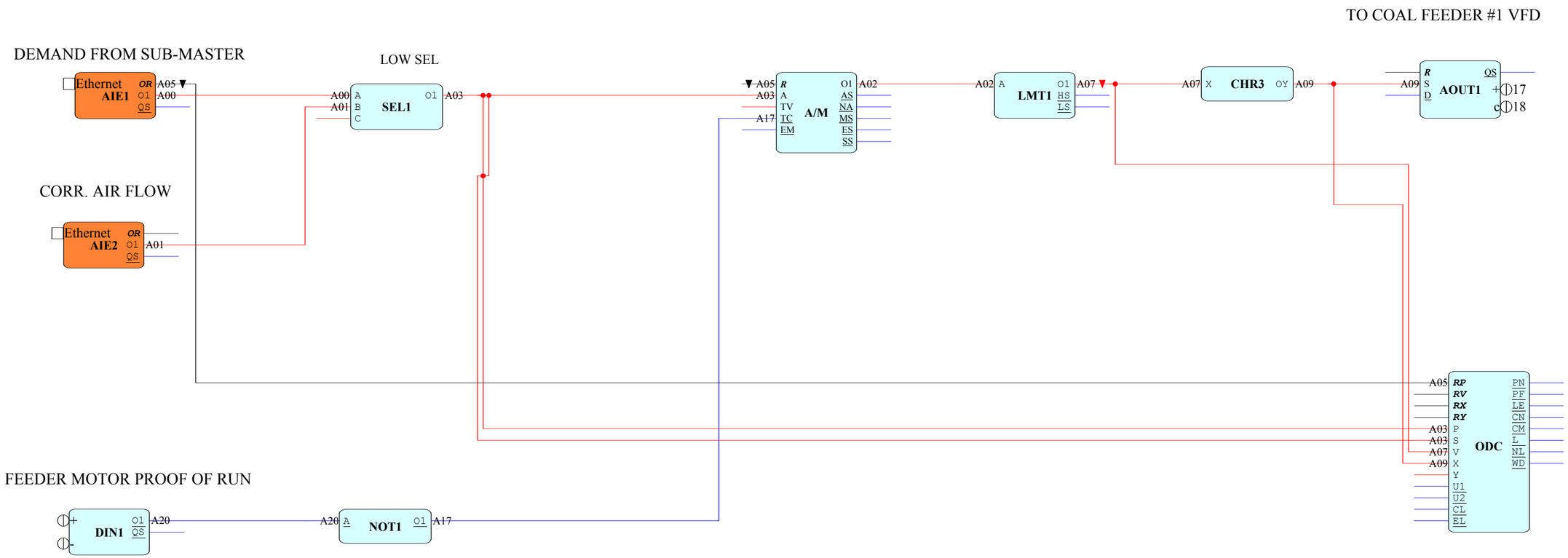

NO.	REVISION	BY	APP'D	DATE

COMPANY: [redacted]

CUSTOMER:

DRAWN	DATE
JCHLLC	1/15/14
APP'D	DATE

TITLE: SS BADGER AFT STBD INBOARD COAL FEEDER

DRWG NO.:

CONTAINS CONFIDENTIAL BUSINESS INFORMATION

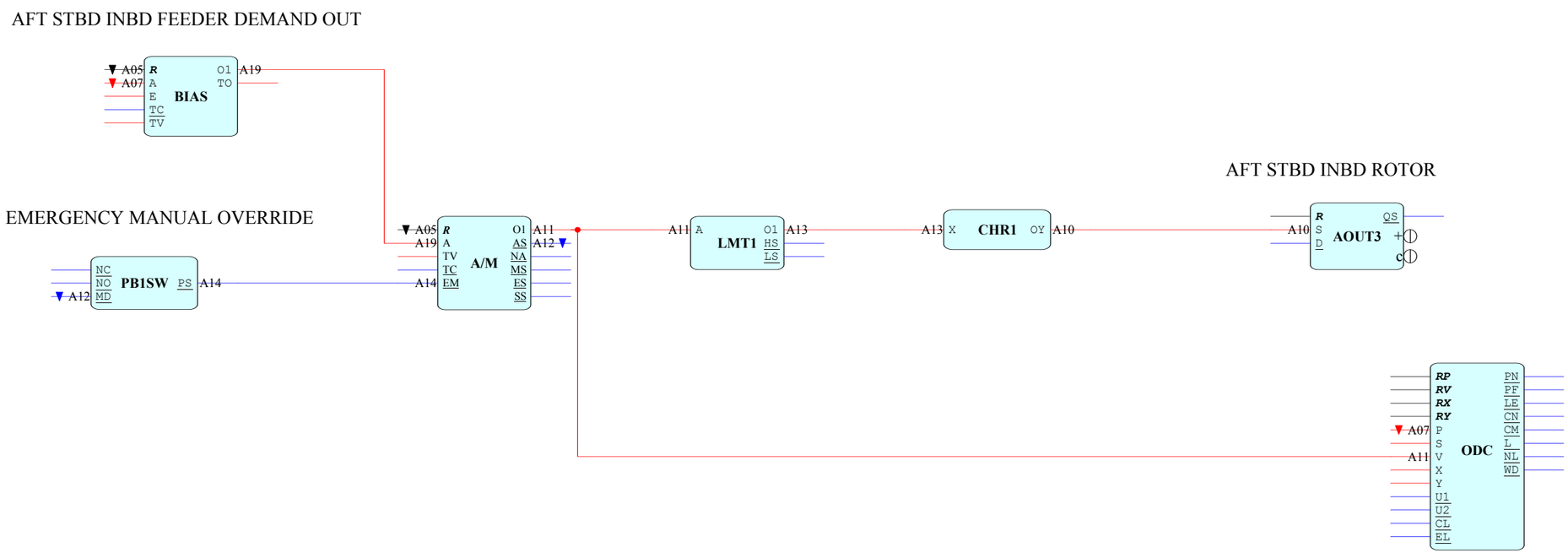

NO.	REVISION	BY	APP'D	DATE	COMPANY: [redacted]		
					CUSTOMER:		
					DRAWN JCHLLC	DATE 1/15/14	TITLE: SS BADGER AFT STBD INBD ROTOR LOOP
					APP'D	DATE	
							DRWG NO.:

CONTAINS CONFIDENTIAL BUSINESS INFORMATION

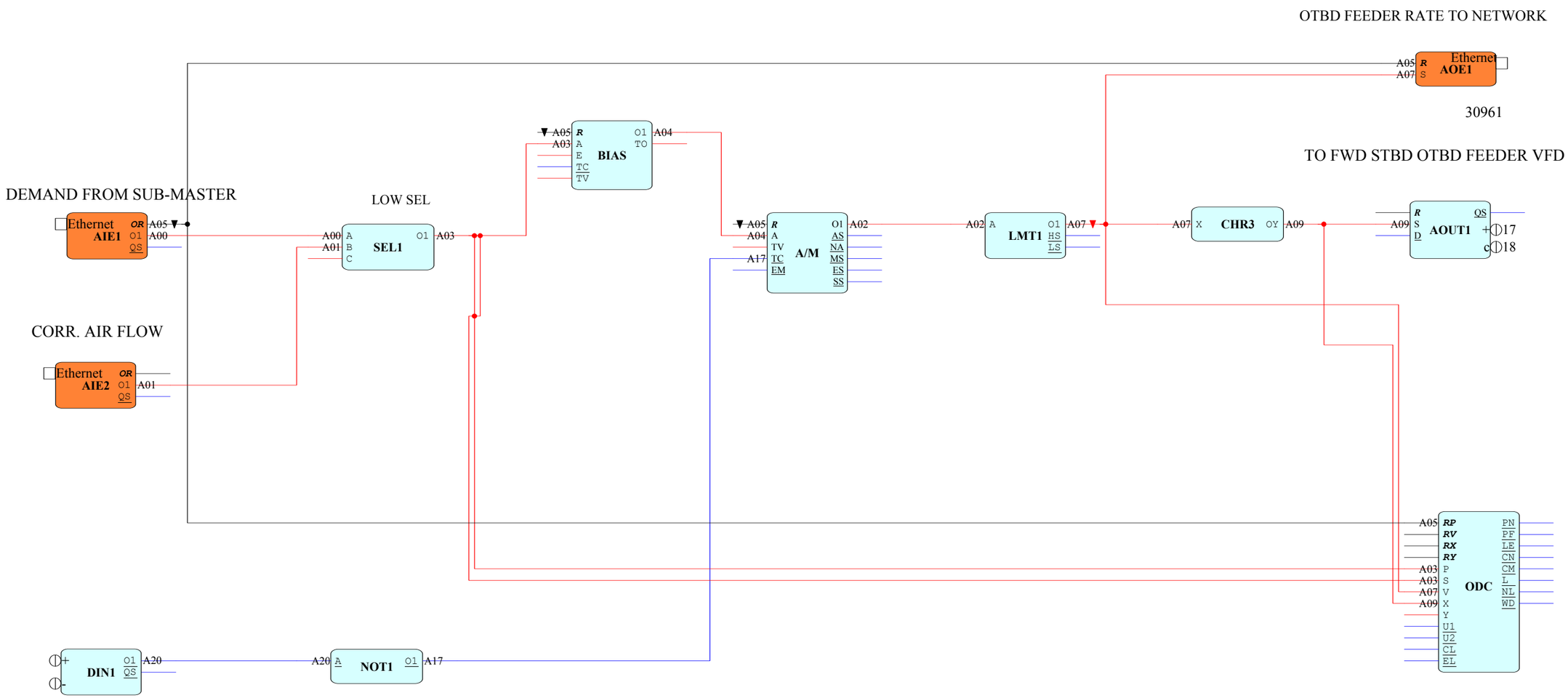

NO.	REVISION	BY	APP'D	DATE

COMPANY: [redacted]

CUSTOMER:

DRAWN	DATE
JCHLLC	1/15/14
APP'D	DATE

TITLE: SS BADGER AFT STBD OUTBOARD COAL FEEDER

DRWG NO.:

CONTAINS CONFIDENTIAL BUSINESS INFORMATION

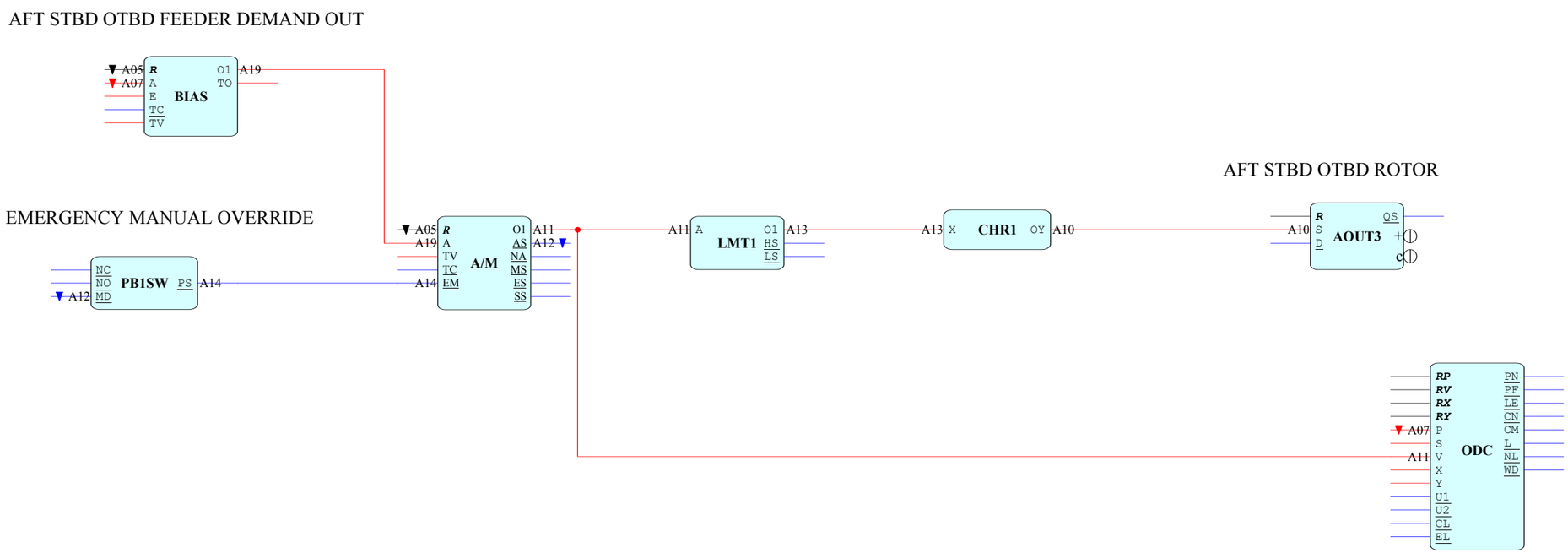

NO.	REVISION	BY	APP'D	DATE	COMPANY: [redacted]		
					CUSTOMER:		
					DRAWN JCHLLC	DATE 1/15/14	TITLE: SS BADGER AFT STBD OUTBOARD ROTOR LOOP
					APP'D	DATE	
							DRWG NO.:

CONTAINS CONFIDENTIAL BUSINESS INFORMATION

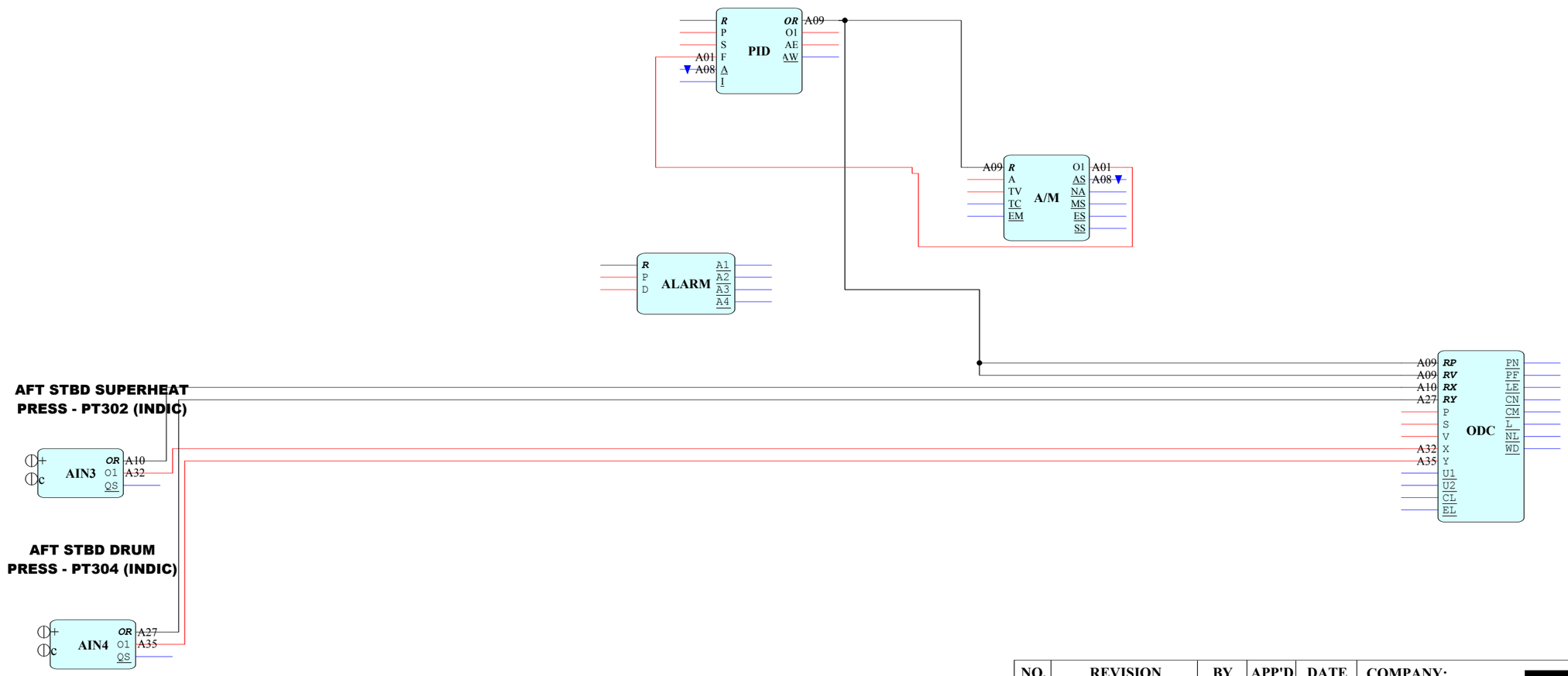

NO.	REVISION	BY	APP'D	DATE	COMPANY: [redacted]		
					CUSTOMER:		
					DRAWN JCHLLC	DATE 1/24/14	TITLE: SS BADGER AFT STBD BLR STEAM PRESS LOOP
					APP'D	DATE	
							DRWG NO.:

CONTAINS CONFIDENTIAL BUSINESS INFORMATION

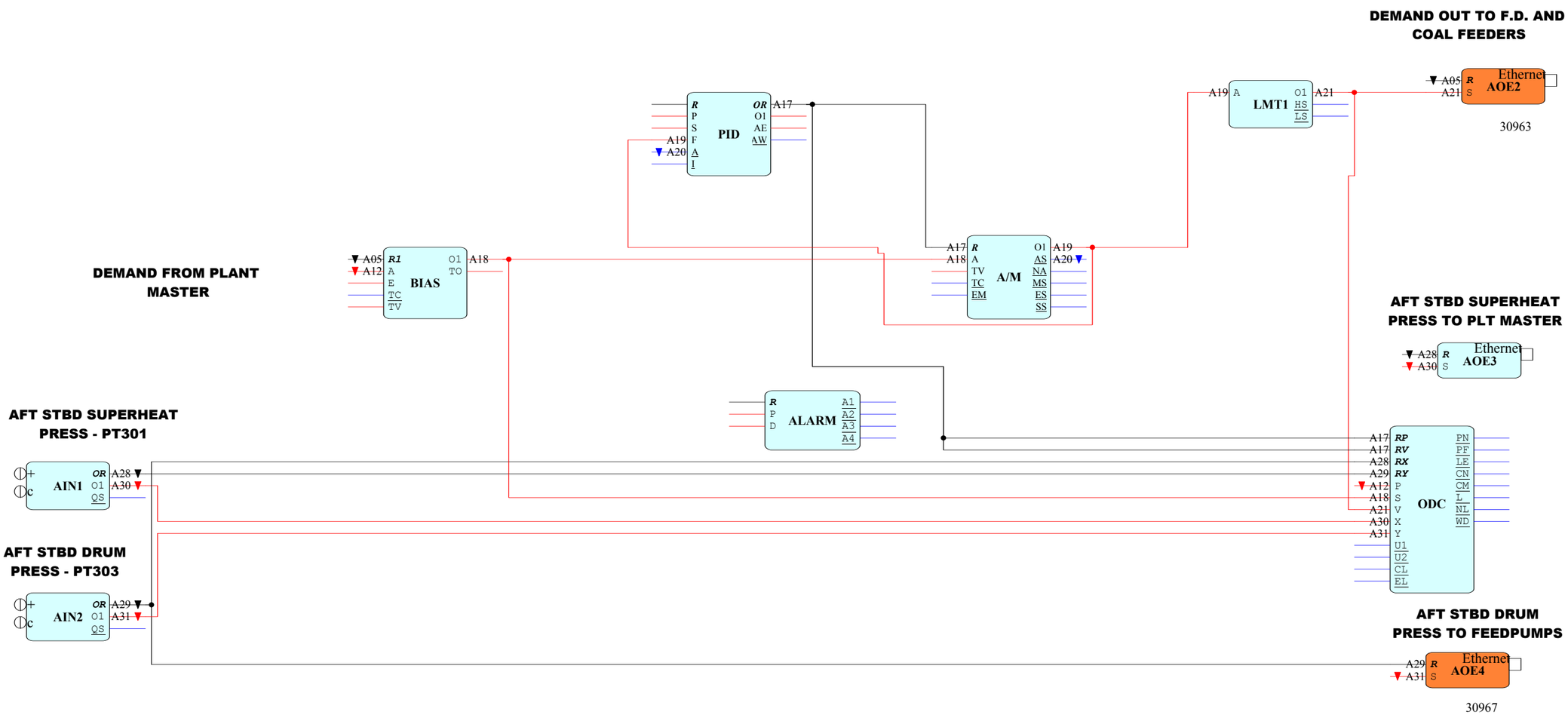

NO.	REVISION	BY	APP'D	DATE	COMPANY: [redacted]		
					CUSTOMER:		
					DRAWN JCH	DATE 2/6/02	TITLE: SS BADGER STBD AFT BLR SUB-MASTER W/ BIAS
					APP'D	DATE	
							DRWG NO.:

CONTAINS CONFIDENTIAL BUSINESS INFORMATION

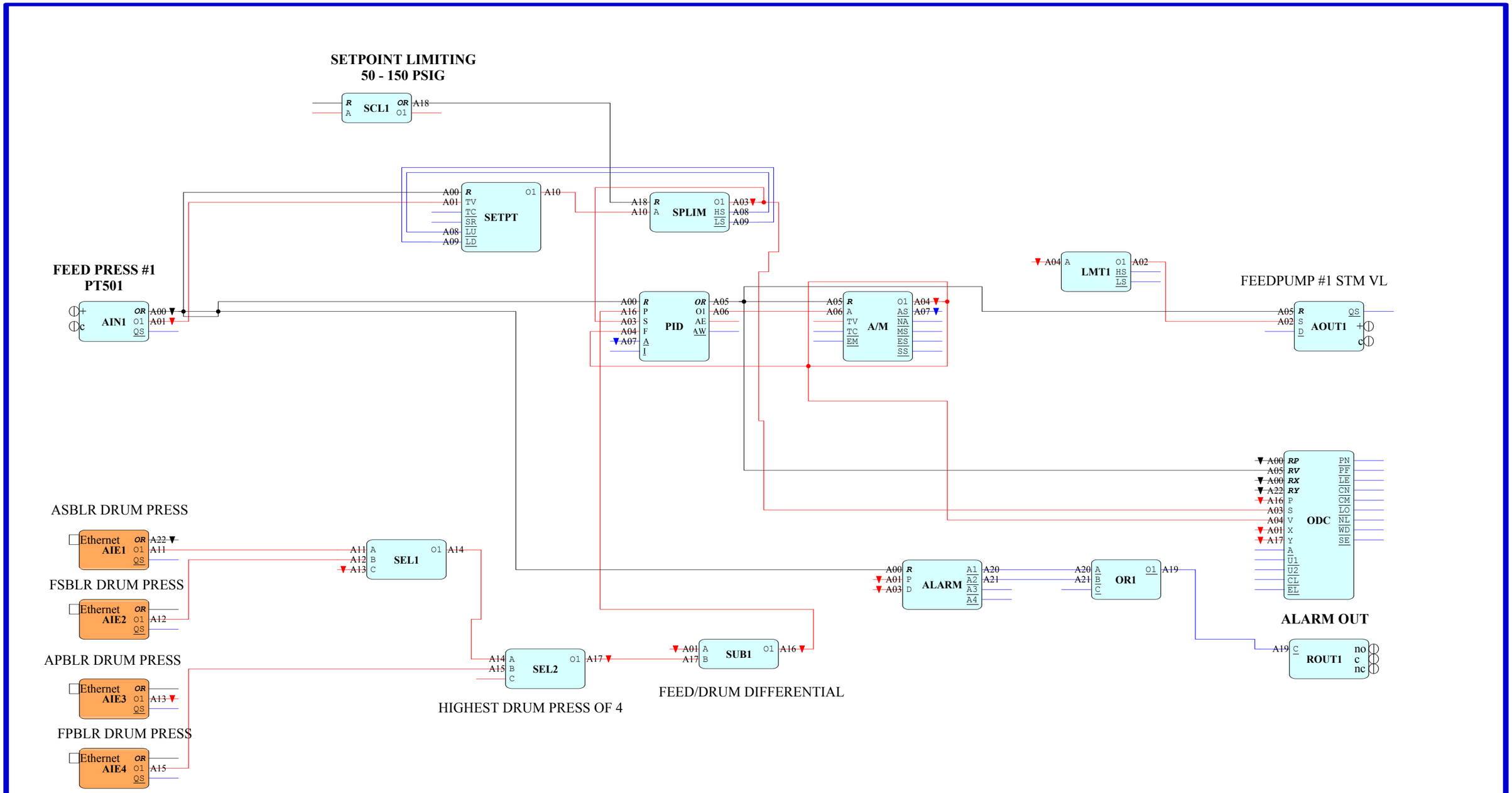

NO.	REVISION	BY	APP'D	DATE

COMPANY: [redacted]

CUSTOMER:

DRAWN	DATE
JCHLLC	1/30/14
APP'D	DATE

TITLE: SS BADGER FEEDPUMP #1 D/P CONTROLLER

DRWG NO.:

CONTAINS CONFIDENTIAL BUSINESS INFORMATION

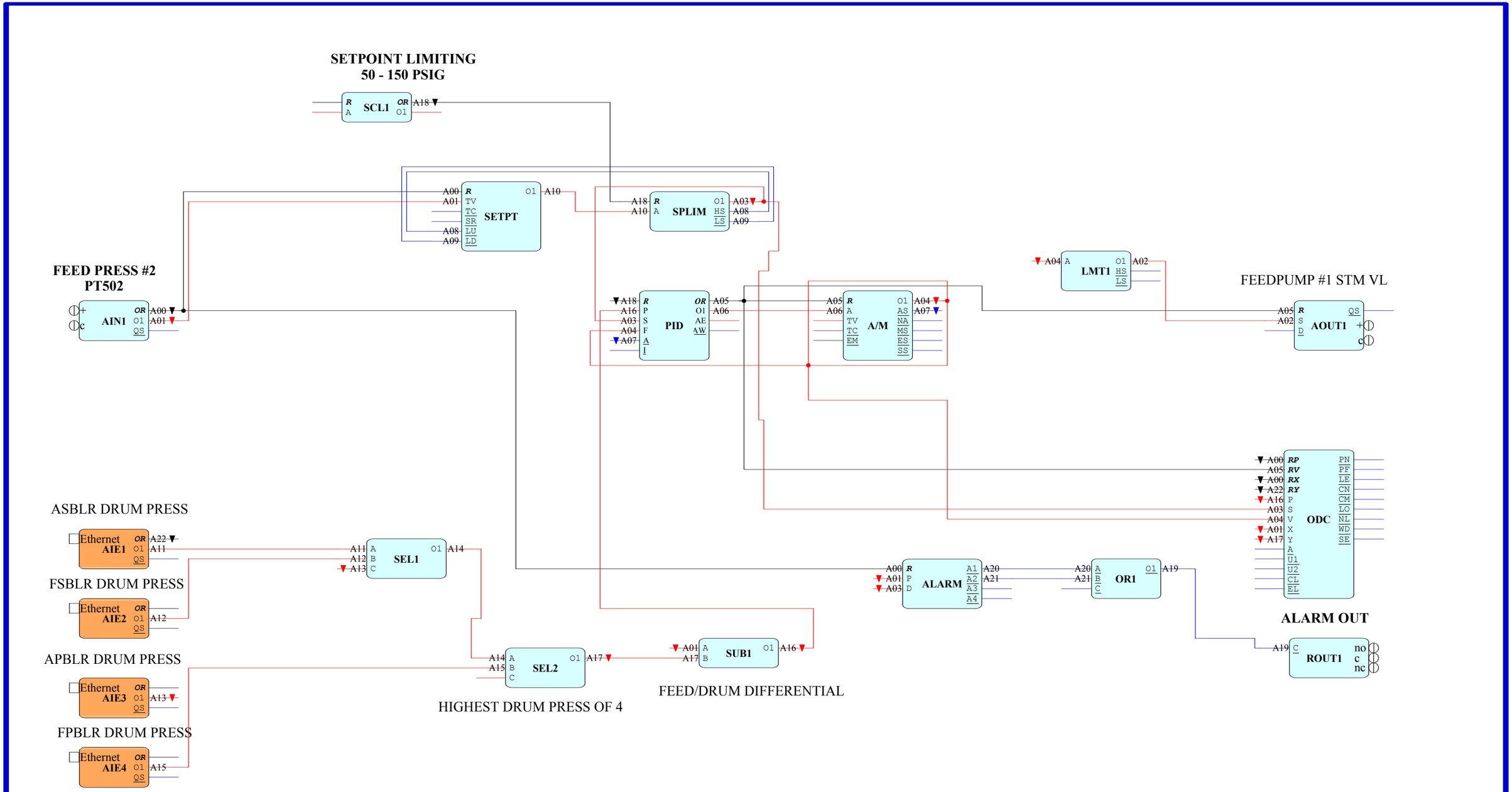

NO.	REVISION	BY	APP'D	DATE

COMPANY: [redacted]

CUSTOMER:

DRAWN	DATE
JCHLLC	1/30/14
APP'D	DATE

TITLE: SS BADGER FEEDPUMP #2 D/P CONTROLLER

DRWG NO.:

CONTAINS CONFIDENTIAL BUSINESS INFORMATION

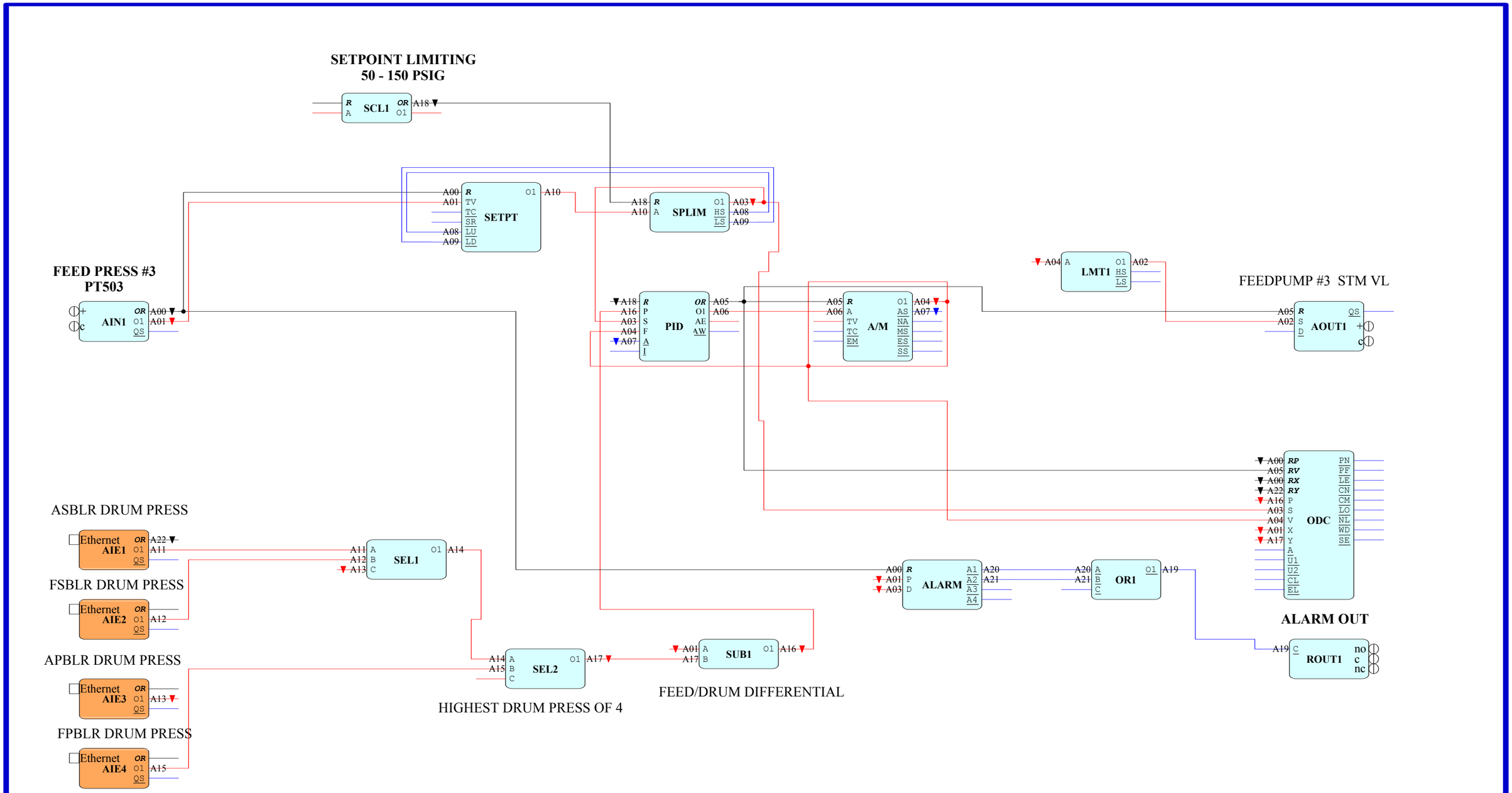

NO.	REVISION	BY	APP'D	DATE

COMPANY: [redacted]

CUSTOMER:

DRAWN	DATE
JCHLLC	1/30/14
APP'D	DATE

TITLE: SS BADGER FEEDPUMP #3 D/P CONTROLLER

DRWG NO.:

CONTAINS CONFIDENTIAL BUSINESS INFORMATION

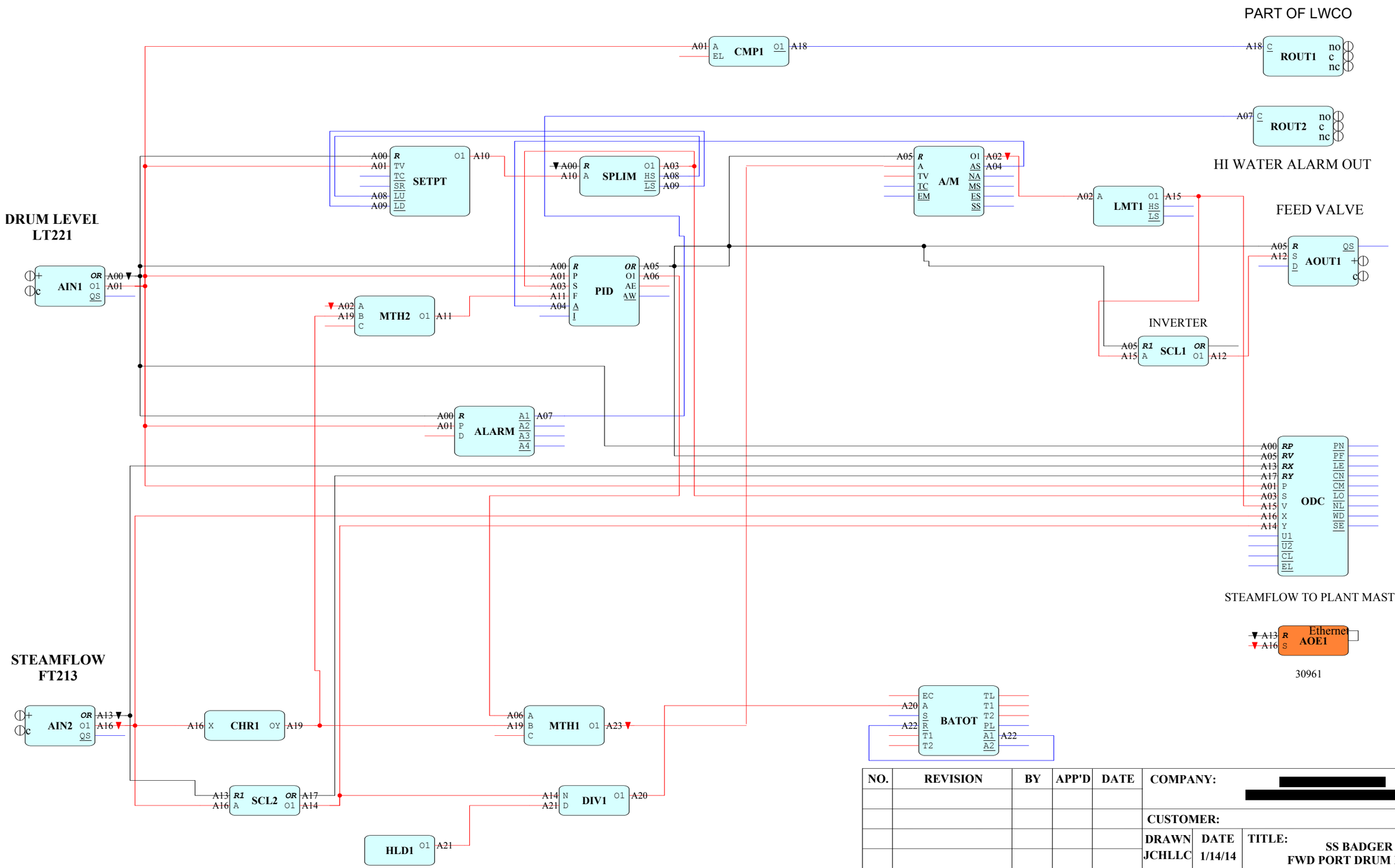

NO.	REVISION	BY	APP'D	DATE	COMPANY: [redacted]		
					CUSTOMER:		
					DRAWN JCHLLC	DATE 1/14/14	TITLE: SS BADGER FWD PORT DRUM LEVEL CONTROL
					APP'D	DATE	
							DRWG NO.:

CONTAINS CONFIDENTIAL BUSINESS INFORMATION

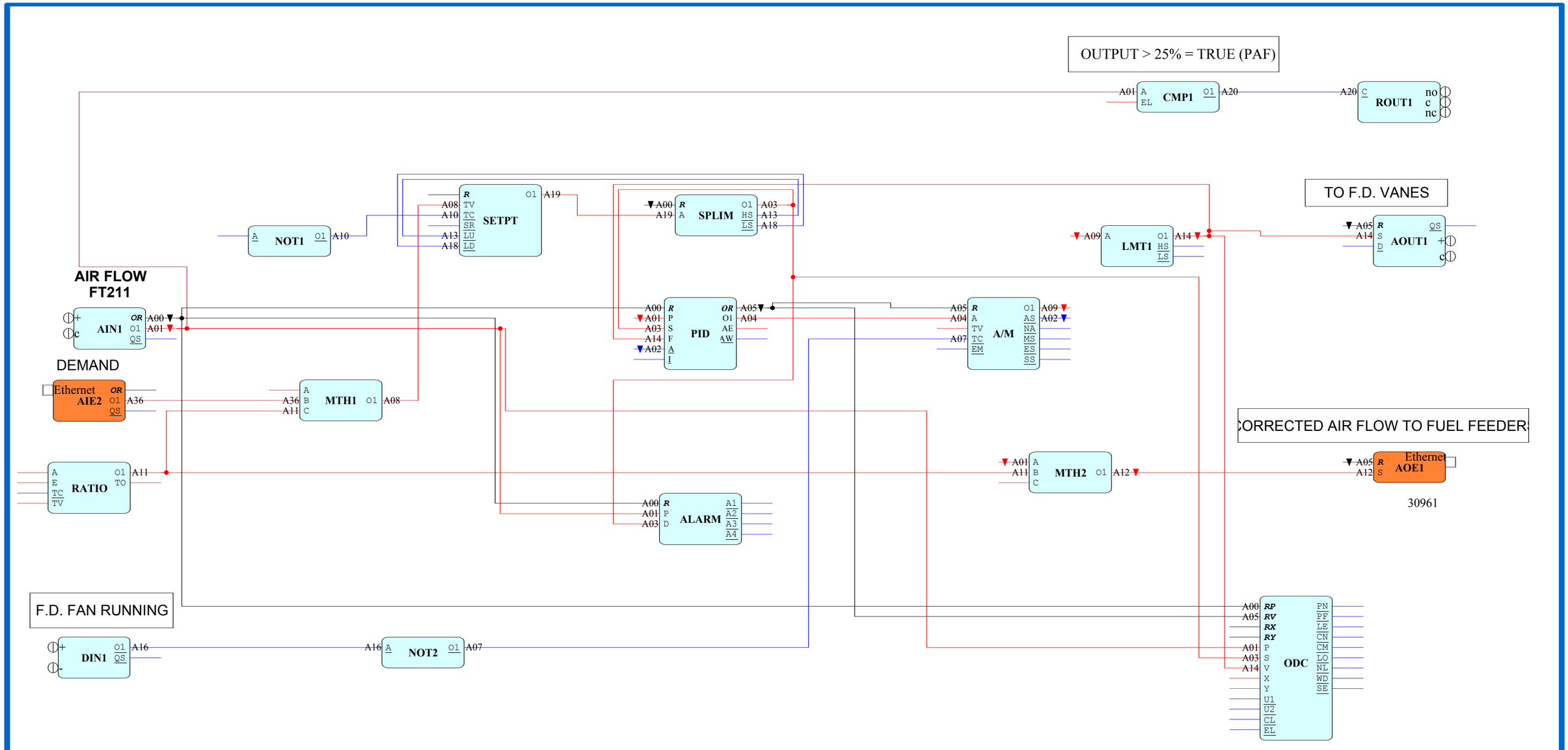

NO.	REVISION	BY	APP'D	DATE	COMPANY: [redacted]
				1	
					CUSTOMER:
					DRAWN JCHLLC / DATE 1/14/14 / TITLE: SS BADGER FWD PORT FD AIR FLOW CONTROL
					APP'D / DATE
					DRWG NO.:

CONTAINS CONFIDENTIAL BUSINESS INFORMATION

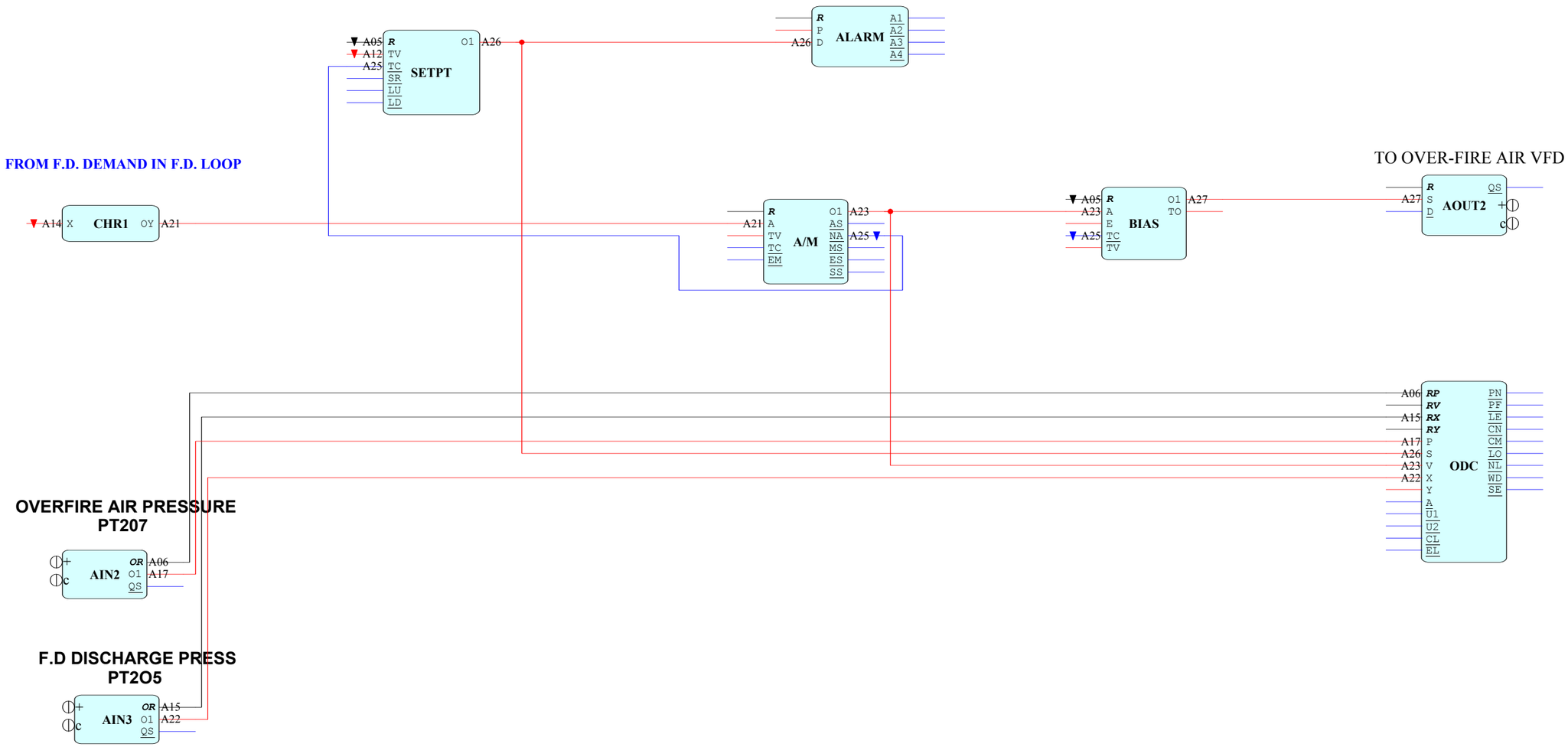

NO.	REVISION	BY	APP'D	DATE	COMPANY: [redacted]		
					CUSTOMER:		
					DRAWN	DATE	TITLE: SS BADGER FP FD OVERFIRE AIR LOOP
					JCHLLC	1/14/14	
					APP'D	DATE	
							DRWG NO.:

CONTAINS CONFIDENTIAL BUSINESS INFORMATION

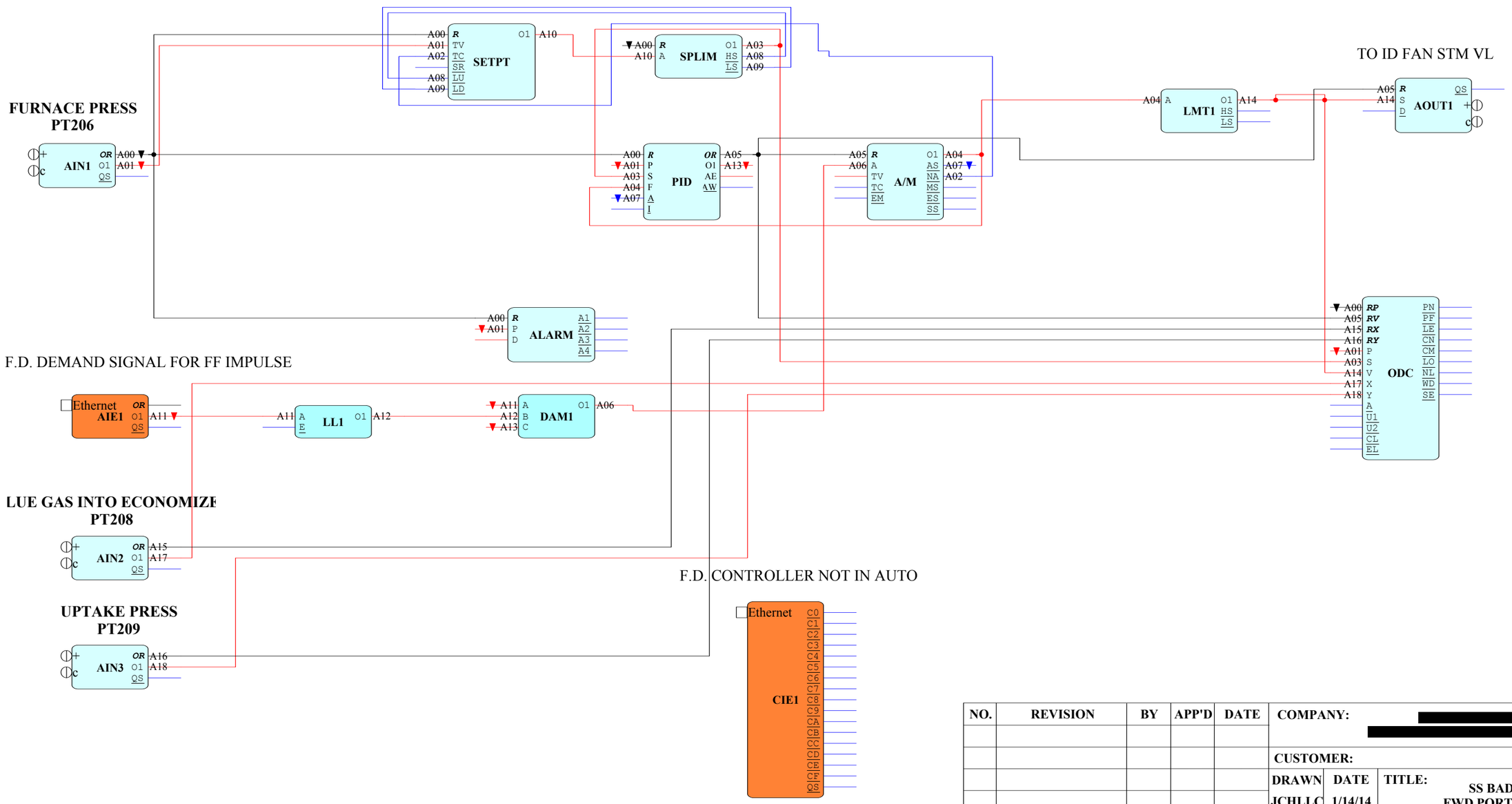

NO.	REVISION	BY	APP'D	DATE	COMPANY: [redacted]		
					CUSTOMER:		
					DRAWN	DATE	TITLE: SS BADGER FWD PORT I.D. FAN CONTROLLER
					JCHLLC	1/14/14	
					APP'D	DATE	
							DRWG NO.:

CONTAINS CONFIDENTIAL BUSINESS INFORMATION

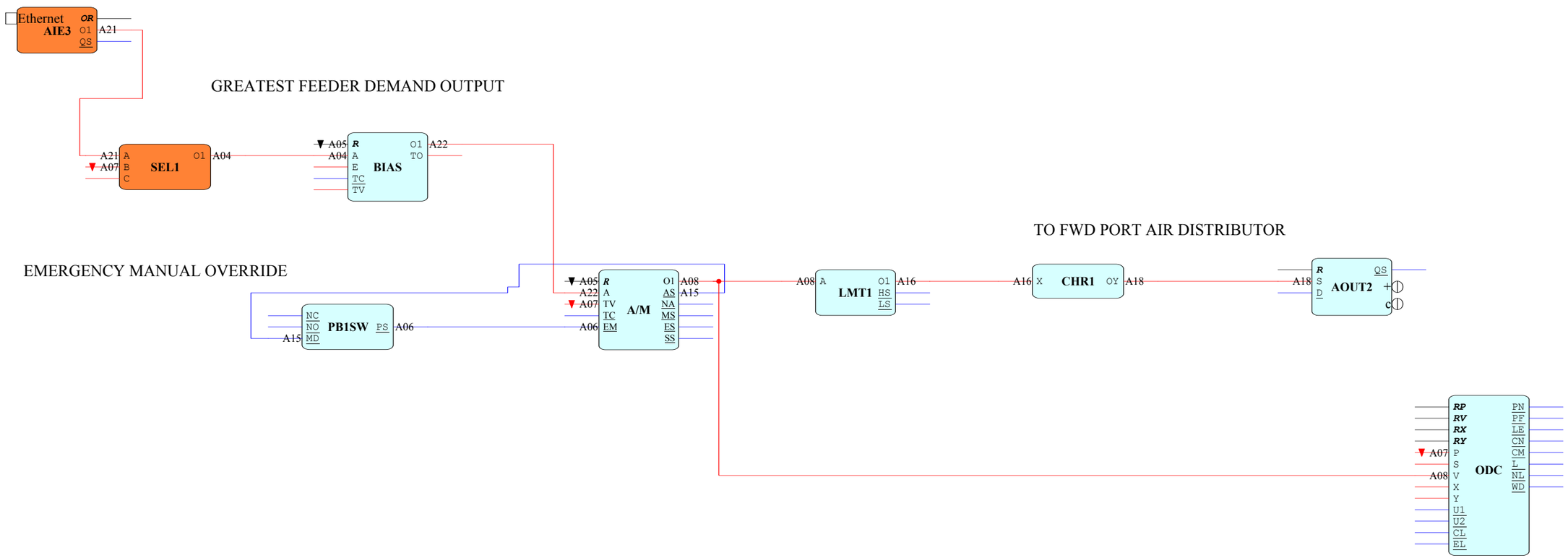

NO.	REVISION	BY	APP'D	DATE	COMPANY: [redacted]		
					CUSTOMER:		
					DRAWN JCHLLC	DATE 1/15/14	TITLE: SS BADGER FWD PORT AIR DISTRIBUTOR
					APP'D	DATE	
							DRWG NO.:

CONTAINS CONFIDENTIAL BUSINESS INFORMATION

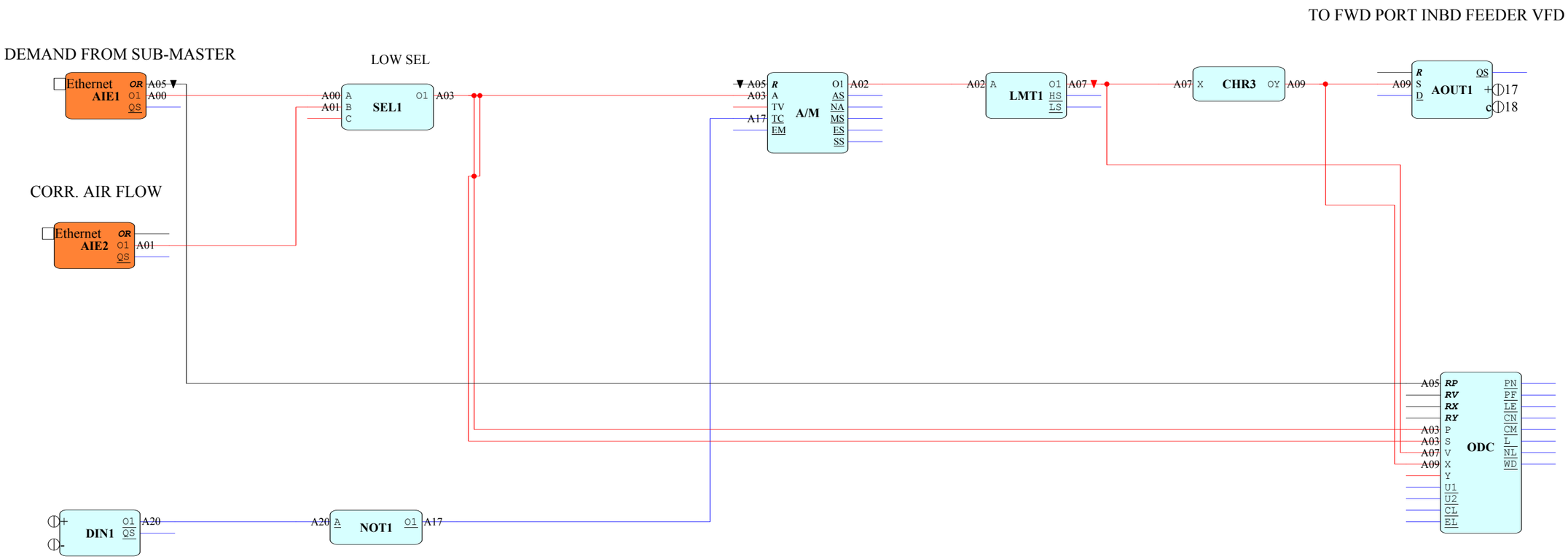

NO.	REVISION	BY	APP'D	DATE

COMPANY: [redacted]

CUSTOMER:

DRAWN	DATE
JCHLLC	1/15/14
APP'D	DATE

TITLE: SS BADGER FWD PORT INBOARD COAL FEEDER

DRWG NO.:

CONTAINS CONFIDENTIAL BUSINESS INFORMATION

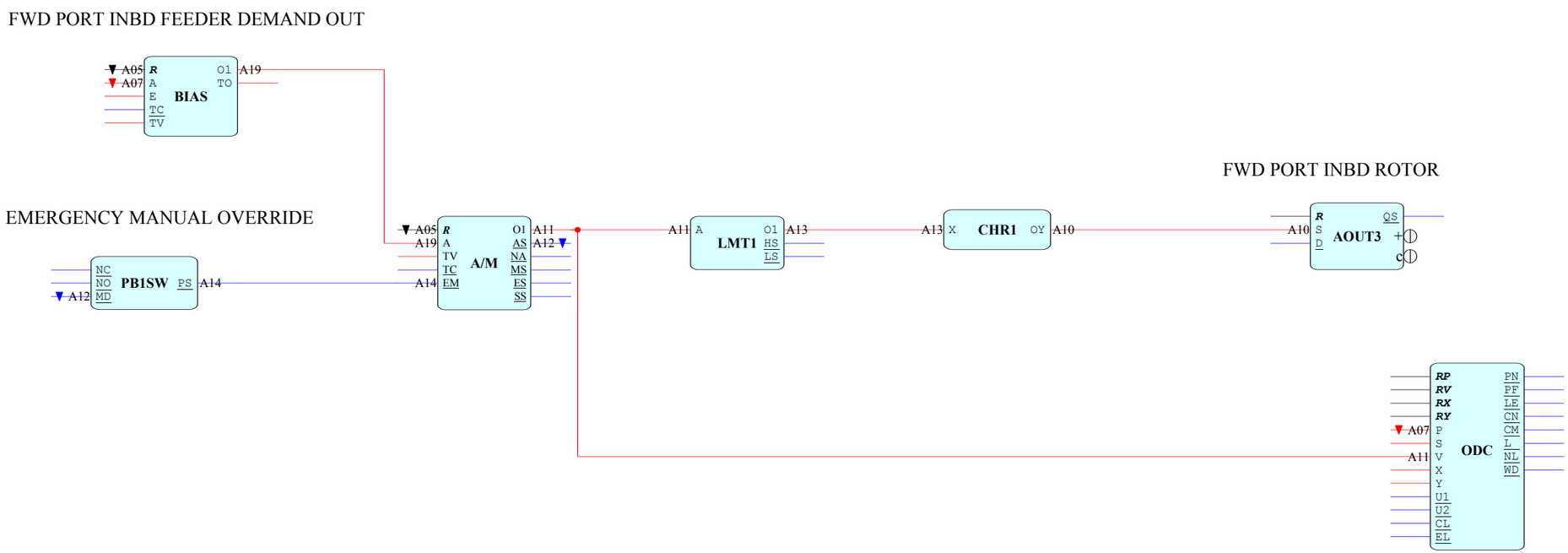

NO.	REVISION	BY	APP'D	DATE	COMPANY: [redacted]		
					CUSTOMER:		
					DRAWN JCHLLC	DATE 1/15/14	TITLE: SS BADGER FWD PORT INBD ROTOR LOOP
					APP'D	DATE	
							DRWG NO.:

CONTAINS CONFIDENTIAL BUSINESS INFORMATION

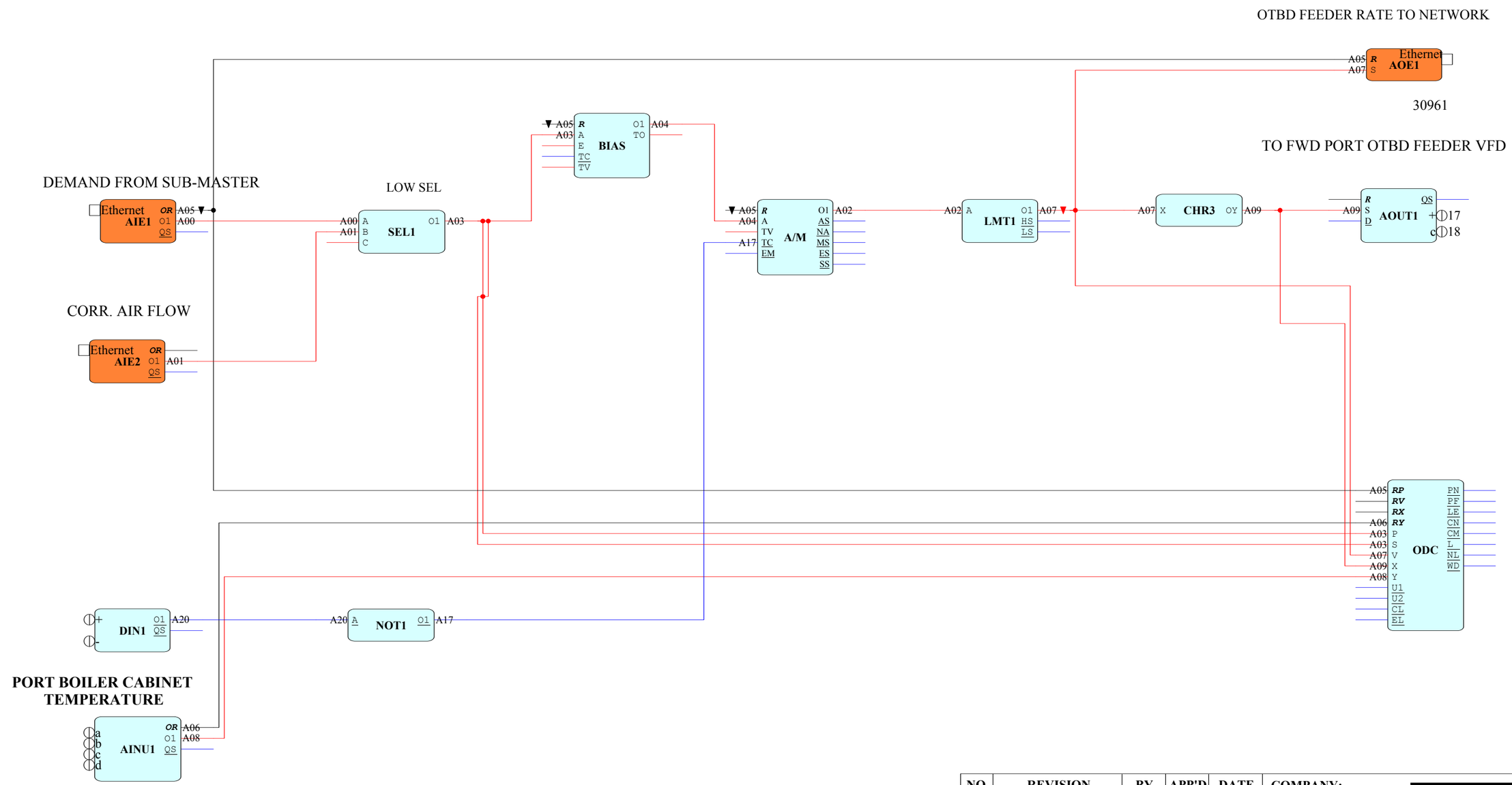

NO.	REVISION	BY	APP'D	DATE
1	ADDED CAB TEMP	JCH		1/29/14

COMPANY: [redacted]

CUSTOMER:

DRAWN JCHLLC | DATE 1/15/14

APP'D | DATE

TITLE: SS BADGER FWD PORT OUTBOARD COAL FEEDER

DRWG NO.:

CONTAINS CONFIDENTIAL BUSINESS INFORMATION

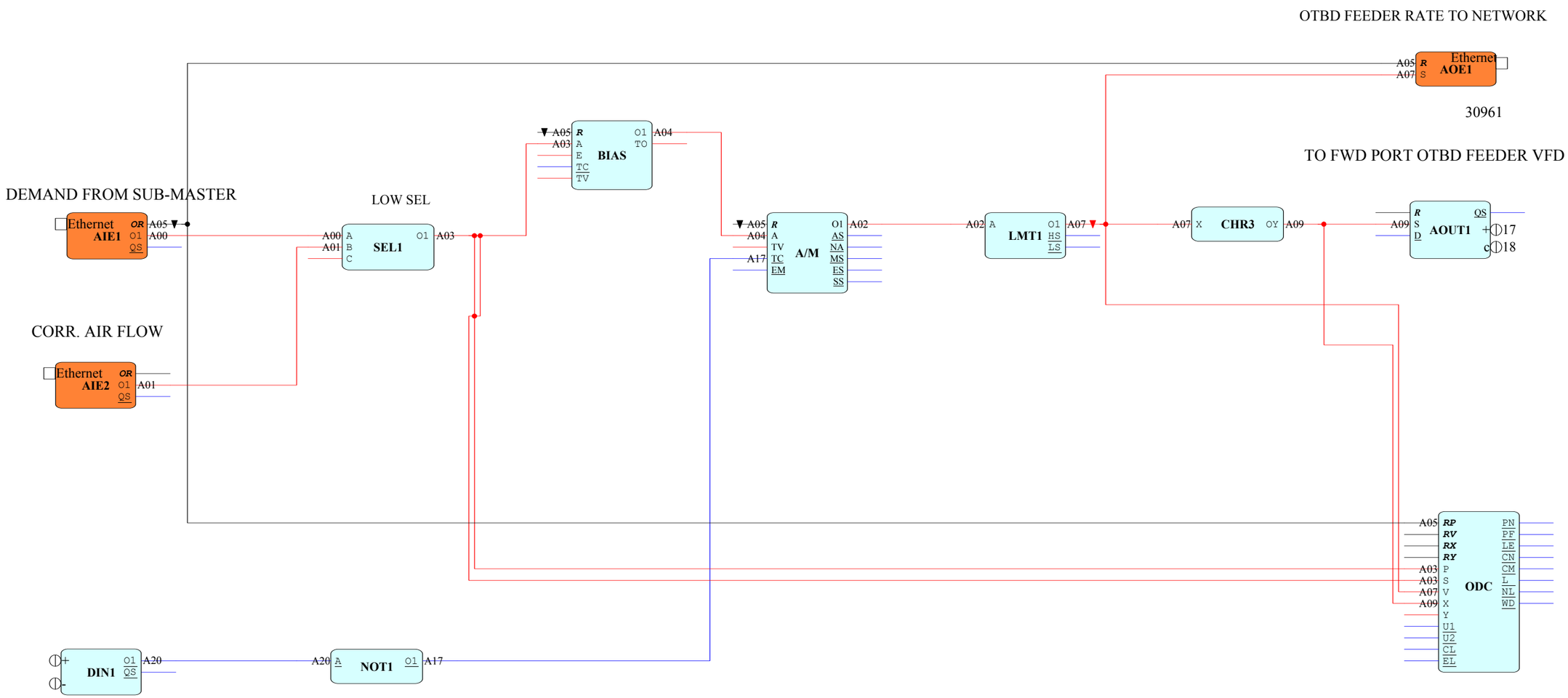

NO.	REVISION	BY	APP'D	DATE	COMPANY: [redacted]		
					CUSTOMER:		
					DRAWN JCHLLC	DATE 1/15/14	TITLE: SS BADGER FWD PORT OUTBOARD COAL FEEDER
					APP'D	DATE	
							DRWG NO.:

CONTAINS CONFIDENTIAL BUSINESS INFORMATION

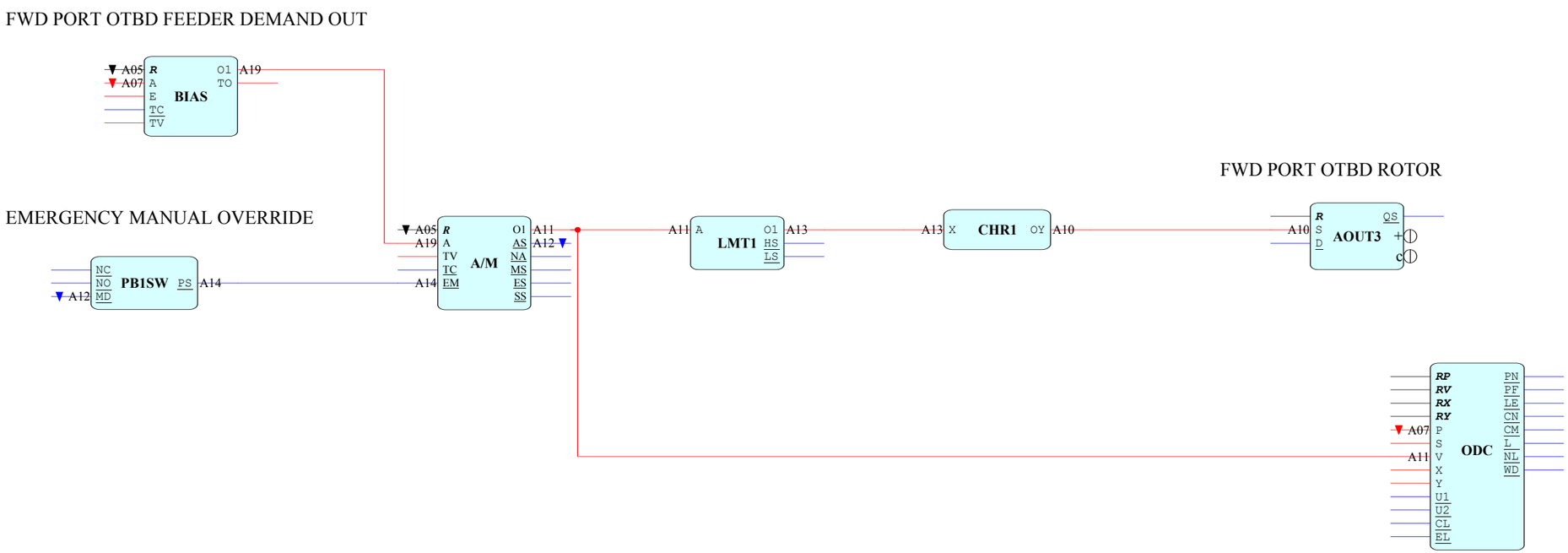

NO.	REVISION	BY	APP'D	DATE	COMPANY: [redacted]		
					CUSTOMER:		
					DRAWN JCHLLC	DATE 1/15/14	TITLE: SS BADGER FWD PORT OUTBOARD ROTOR LOOP
					APP'D	DATE	
							DRWG NO.:

CONTAINS CONFIDENTIAL BUSINESS INFORMATION

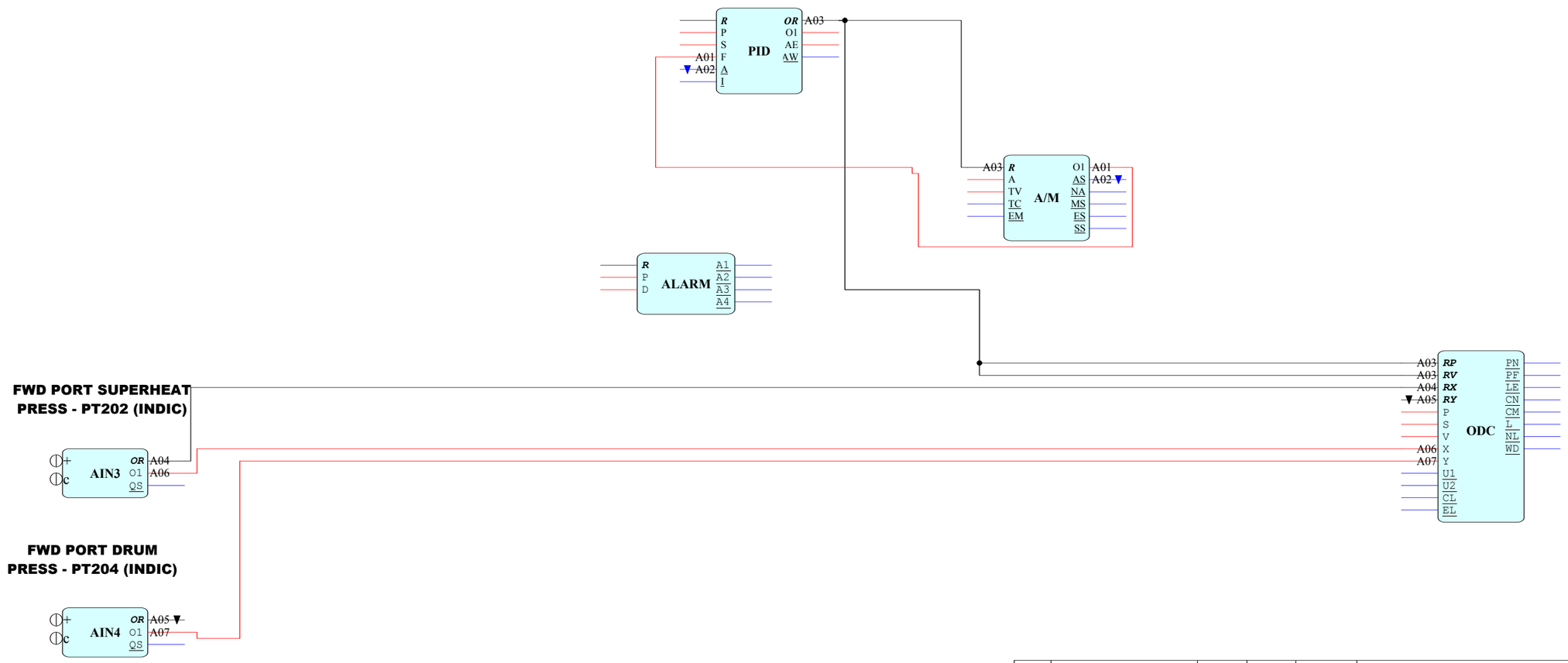

NO.	REVISION	BY	APP'D	DATE	COMPANY: [redacted]		
					CUSTOMER:		
					DRAWN JCHLLC	DATE 1/24/14	TITLE: SS BADGER FWD PORT BLR STEAM PRESS LOOP
					APP'D	DATE	
							DRWG NO.:

CONTAINS CONFIDENTIAL BUSINESS INFORMATION

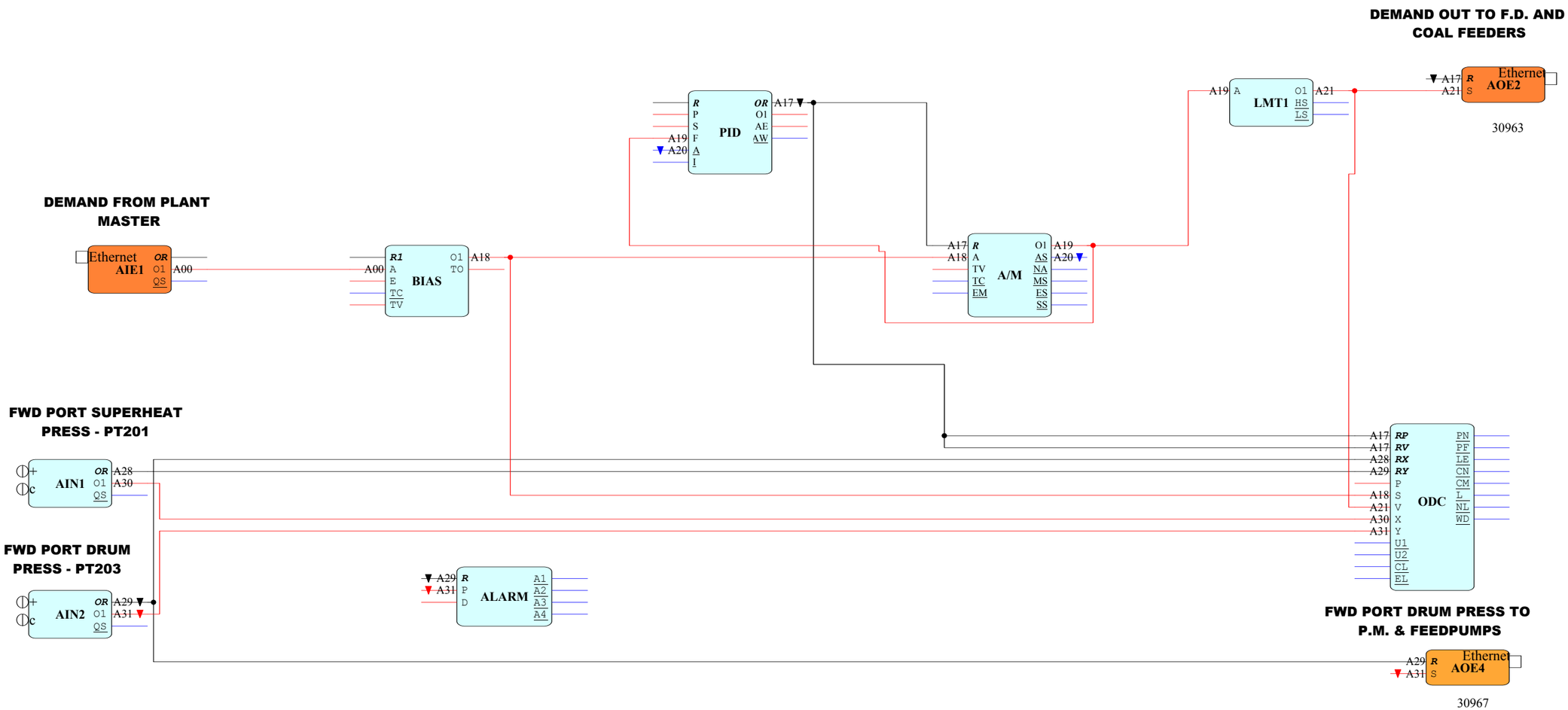

NO.	REVISION	BY	APP'D	DATE	COMPANY: [redacted]		
					CUSTOMER:		
					DRAWN JCHLLC	DATE 1/14/14	TITLE: SS BADGER FWD PORT BLR SUB-MASTER W/ BIAS
					APP'D	DATE	
							DRWG NO.:

CONTAINS CONFIDENTIAL BUSINESS INFORMATION

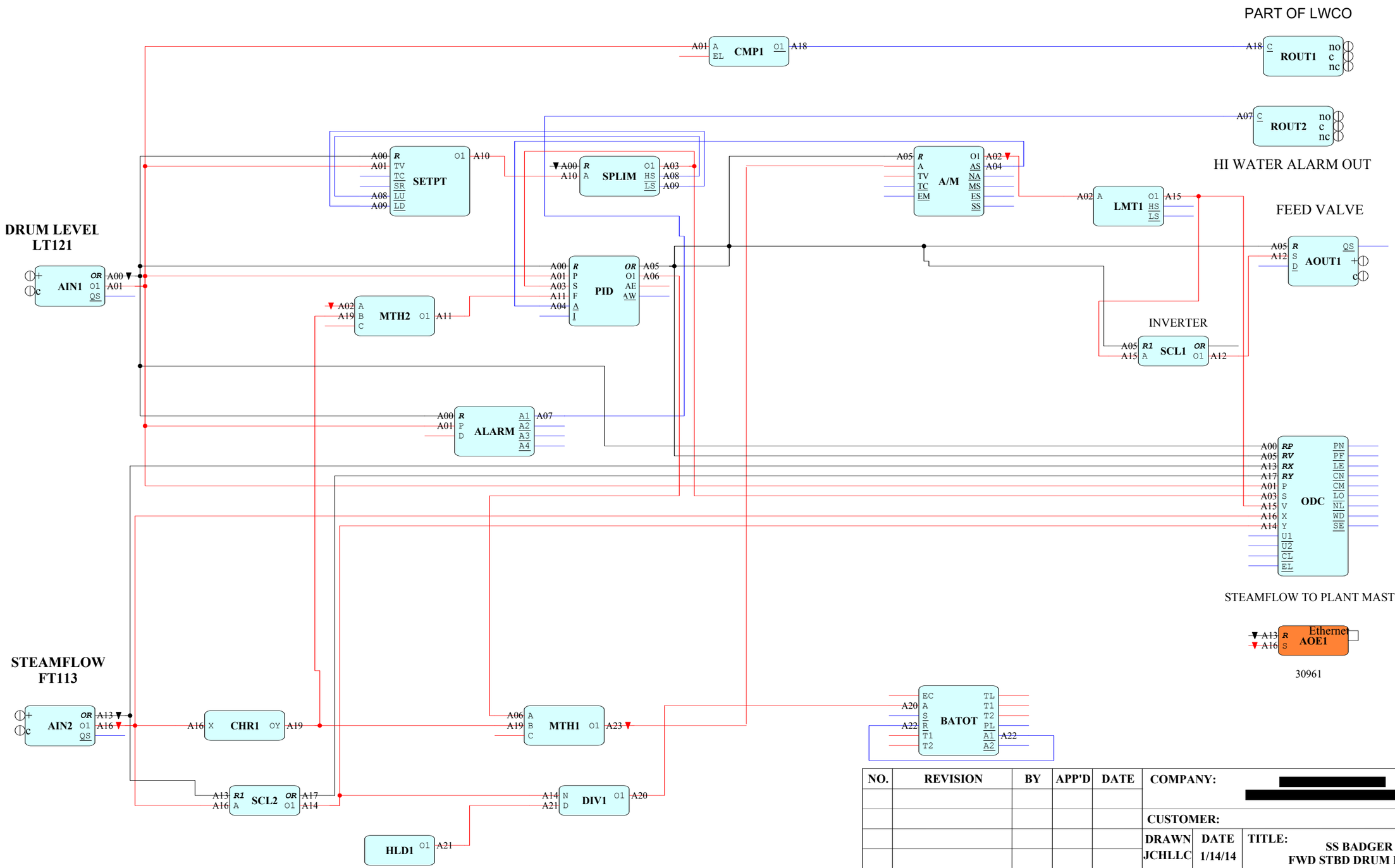

NO.	REVISION	BY	APP'D	DATE	COMPANY: [redacted]		
					CUSTOMER:		
					DRAWN JCHLLC	DATE 1/14/14	TITLE: SS BADGER FWD STBD DRUM LEVEL CONTROL
					APP'D	DATE	
							DRWG NO.:

CONTAINS CONFIDENTIAL BUSINESS INFORMATION

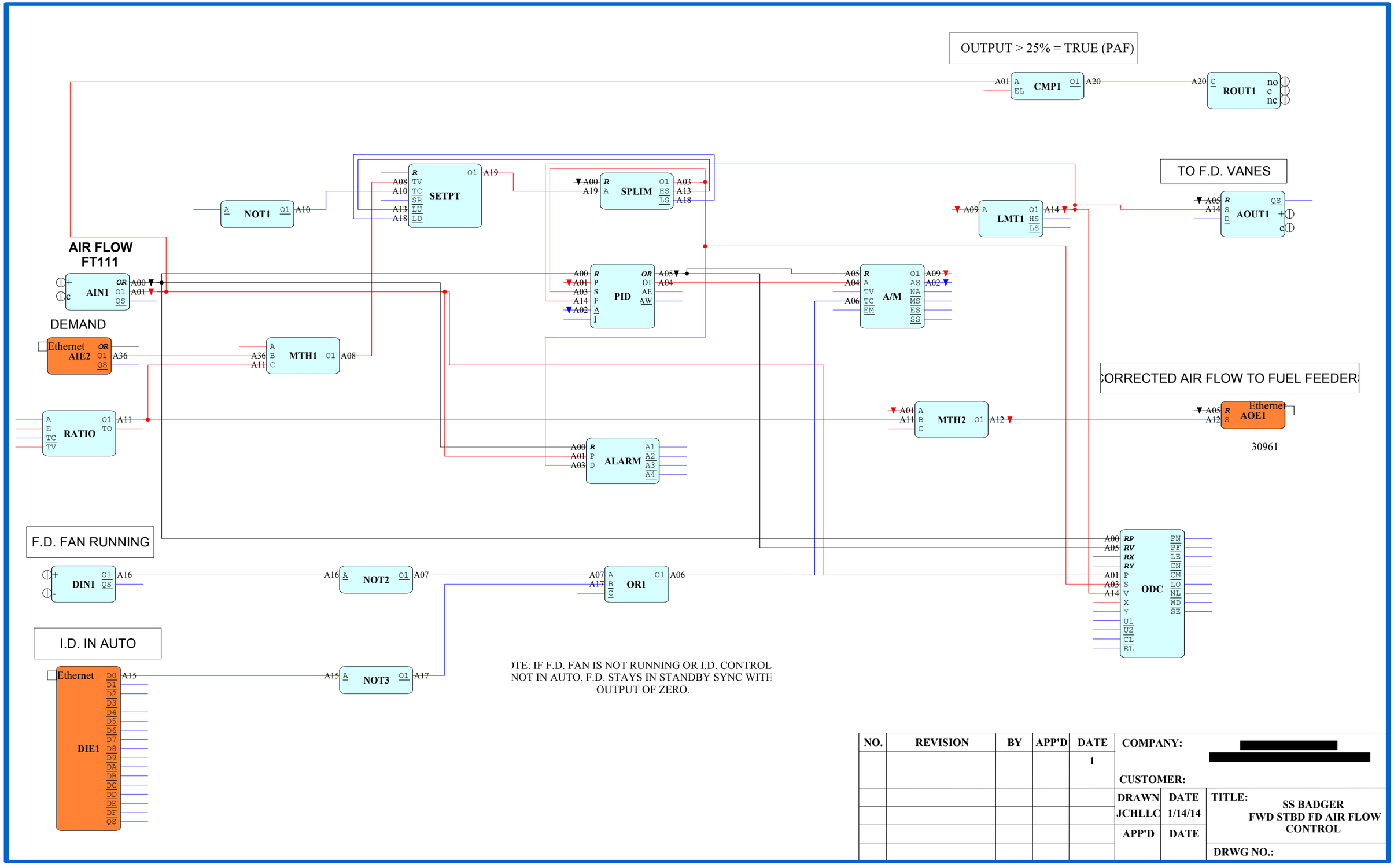

NO.	REVISION	BY	APP'D	DATE	COMPANY: [redacted]
				1	
					CUSTOMER:
					DRAWN JCHLLC / DATE 1/14/14 / TITLE: SS BADGER FWD STBD FD AIR FLOW CONTROL
					APP'D / DATE
					DRWG NO.:

CONTAINS CONFIDENTIAL BUSINESS INFORMATION

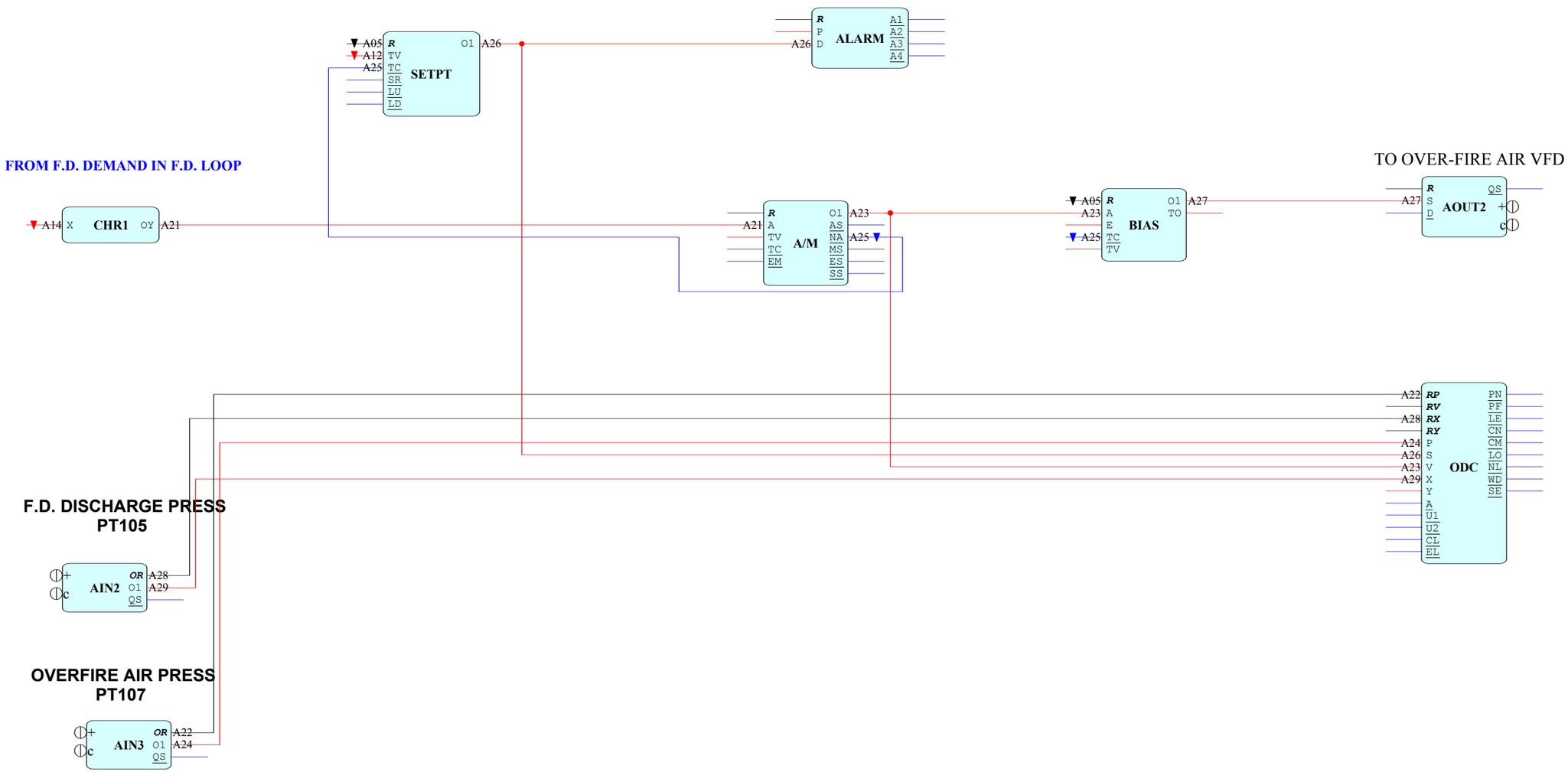

NO.	REVISION	BY	APP'D	DATE	COMPANY: [redacted]		
					CUSTOMER:		
					DRAWN	DATE	TITLE: SS BADGER FWD STBD OVERFIRE AIR LOOP
					JCHLLC	1/14/14	
					APP'D	DATE	
							DRWG NO.:

CONTAINS CONFIDENTIAL BUSINESS INFORMATION

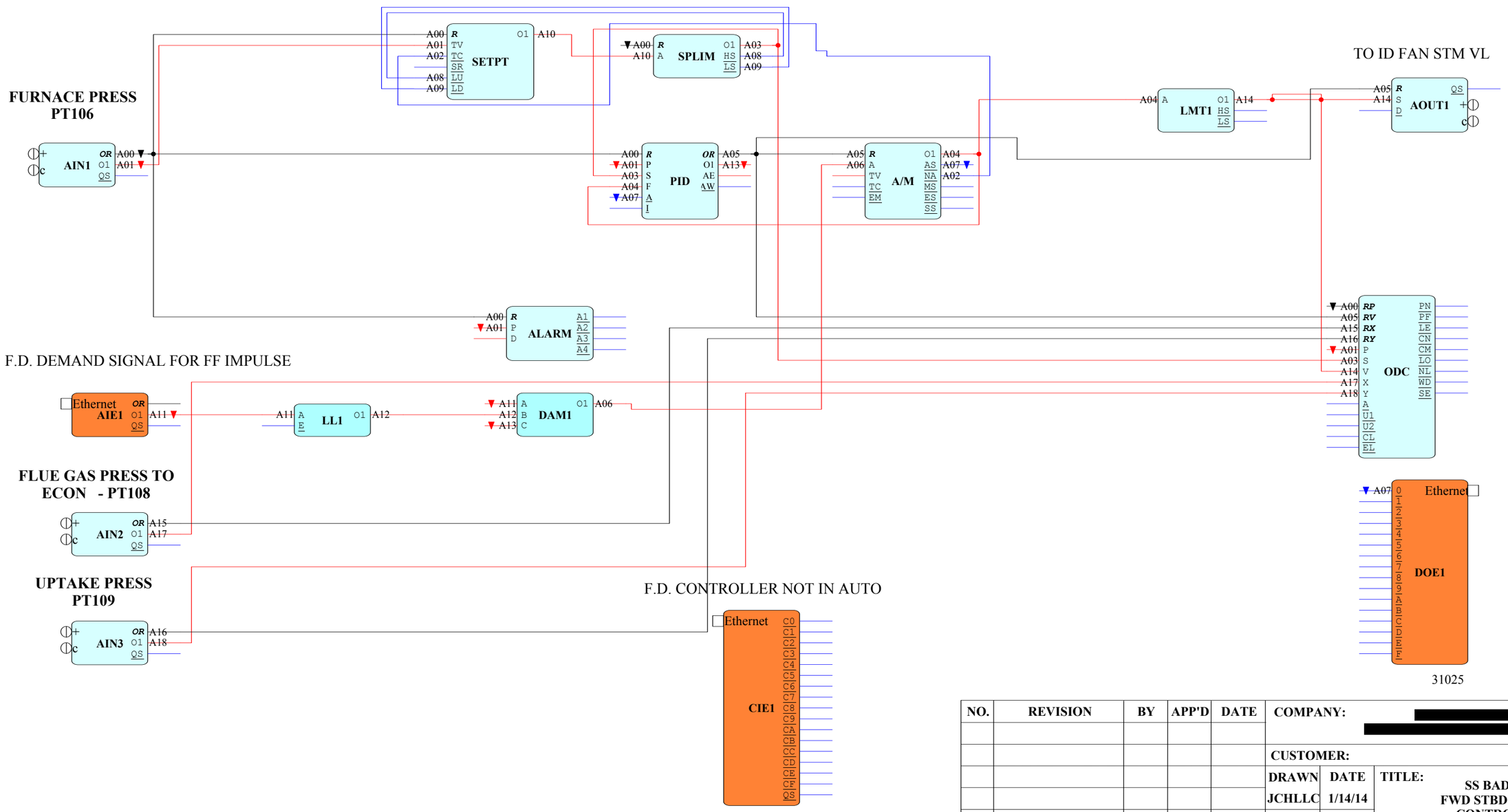

NO.	REVISION	BY	APP'D	DATE	COMPANY: [redacted]
					CUSTOMER:
					DRAWN JCHLLC / DATE 1/14/14 / TITLE: SS BADGER FWD STBD I.D. FAN CONTROLLER
					APP'D / DATE
					DRWG NO.:

CONTAINS CONFIDENTIAL BUSINESS INFORMATION

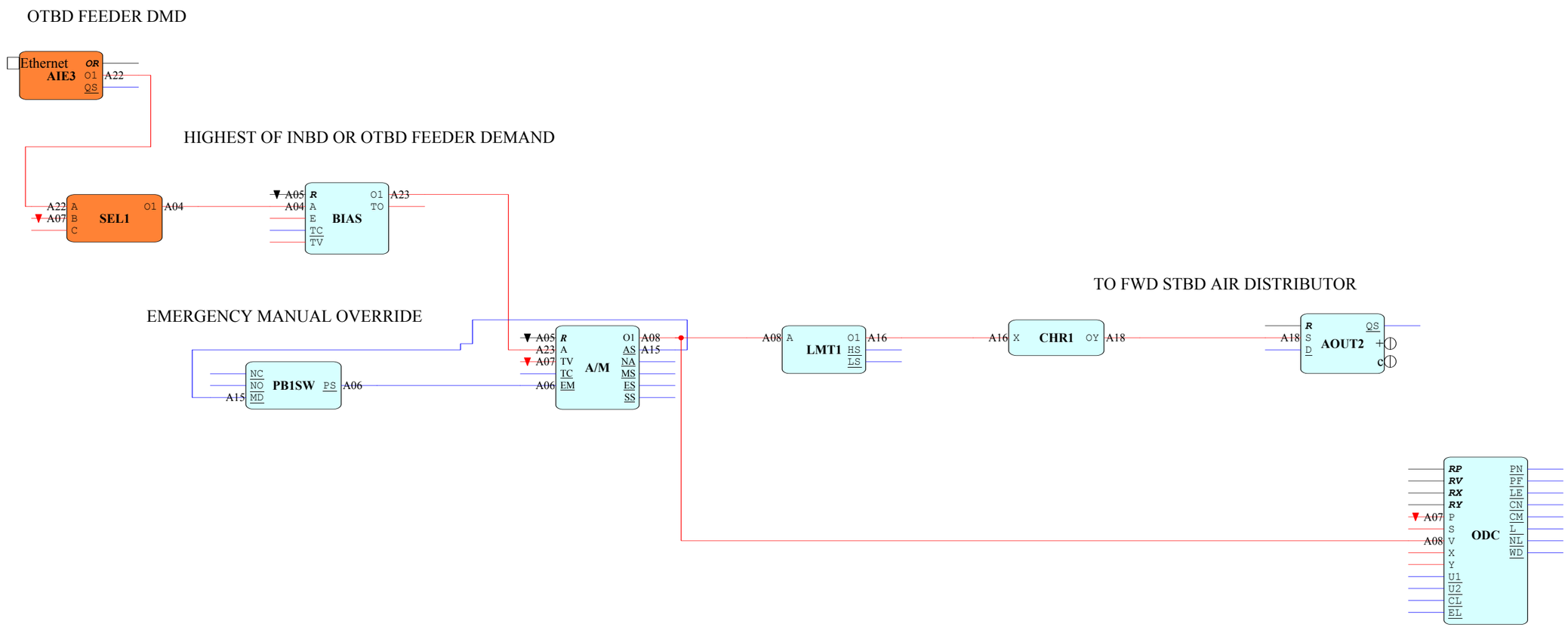

NO.	REVISION	BY	APP'D	DATE	COMPANY: [redacted]		
					CUSTOMER:		
					DRAWN JCHLLC	DATE 1/15/14	TITLE: SS BADGER FWD STBD AIR DISTRIBUTOR
					APP'D	DATE	
							DRWG NO.:

CONTAINS CONFIDENTIAL BUSINESS INFORMATION

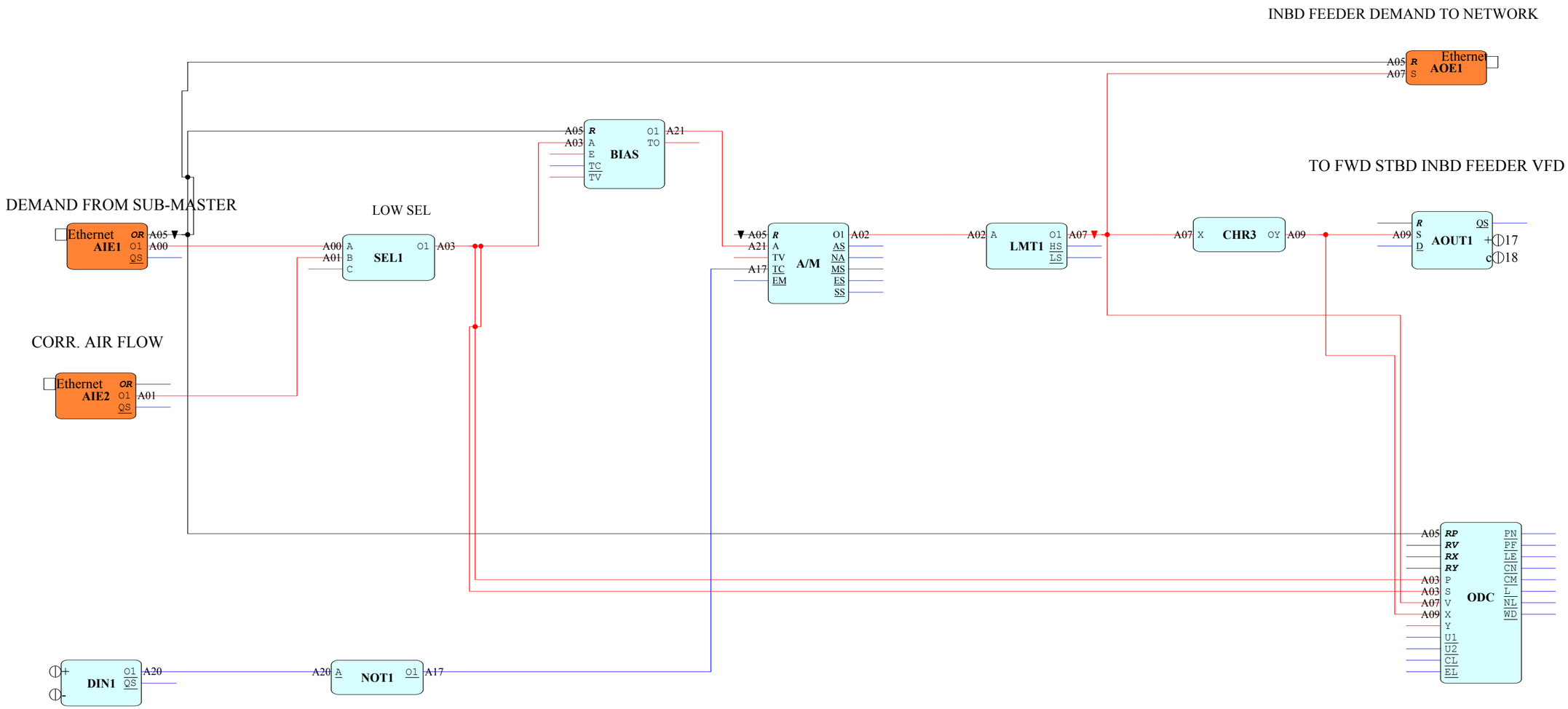

NO.	REVISION	BY	APP'D	DATE	COMPANY: [redacted]		
					CUSTOMER:		
					DRAWN JCHLLC	DATE 1/15/14	TITLE: SS BADGER FWD STBD INBOARD COAL FEEDER
					APP'D	DATE	
							DRWG NO.:

CONTAINS CONFIDENTIAL BUSINESS INFORMATION

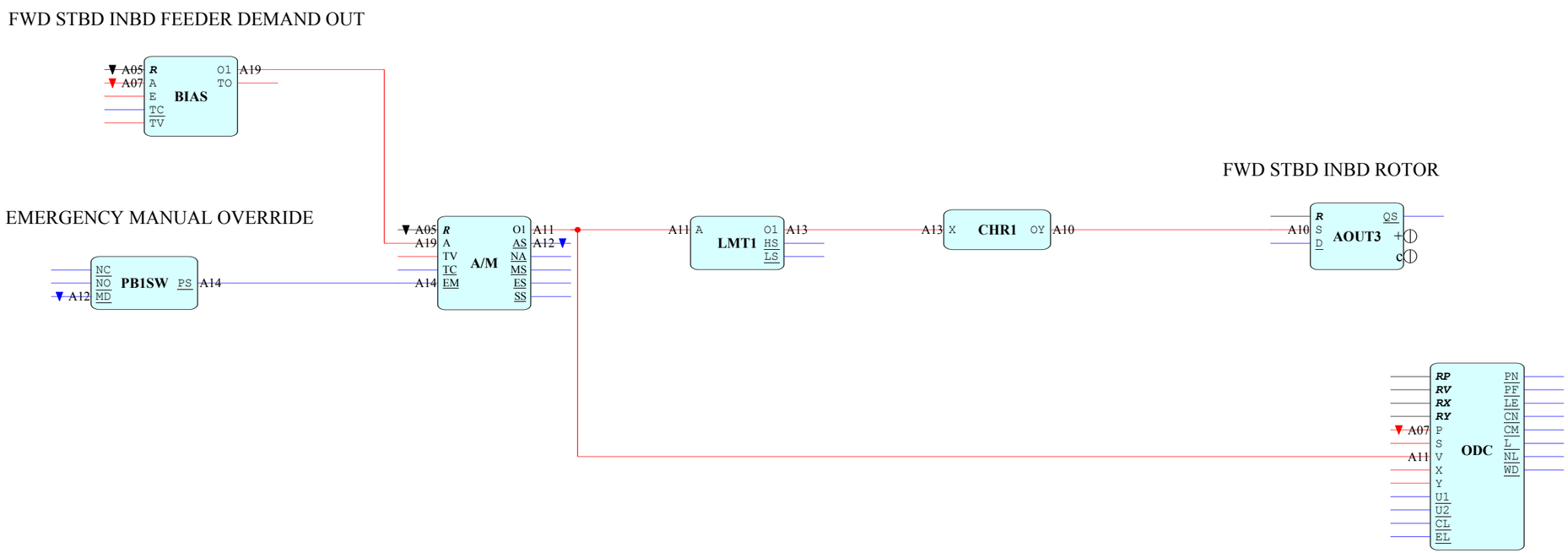

NO.	REVISION	BY	APP'D	DATE	COMPANY: [redacted]		
					CUSTOMER:		
					DRAWN JCHLLC	DATE 1/15/14	TITLE: SS BADGER FWD STBD INBD ROTOR LOOP
					APP'D	DATE	
							DRWG NO.:

US EPA ARCHIVE DOCUMENT

CONTAINS CONFIDENTIAL BUSINESS INFORMATION

REV.

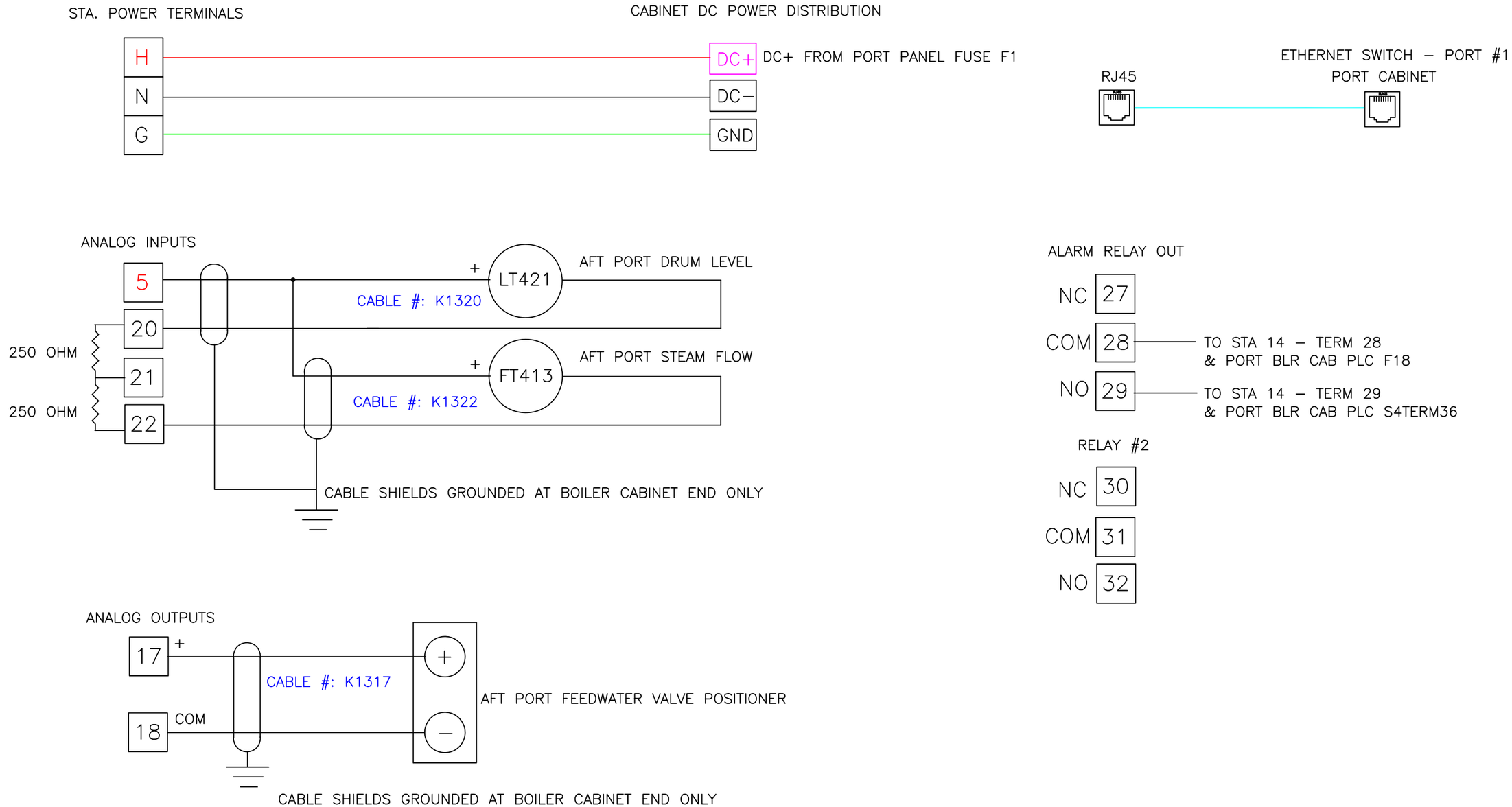

[redacted]

SS BADGER
STATION 13 – AFT PORT DRUM LEVEL
WIRING DETAILS

©

DRAWING NAME: STA13.DWG		DRAWING NUMBER:
BY: JCHLLC	DATE: 1/29/14	SHEET ___ OF ___

US EPA ARCHIVE DOCUMENT

CONTAINS CONFIDENTIAL BUSINESS INFORMATION

REV.

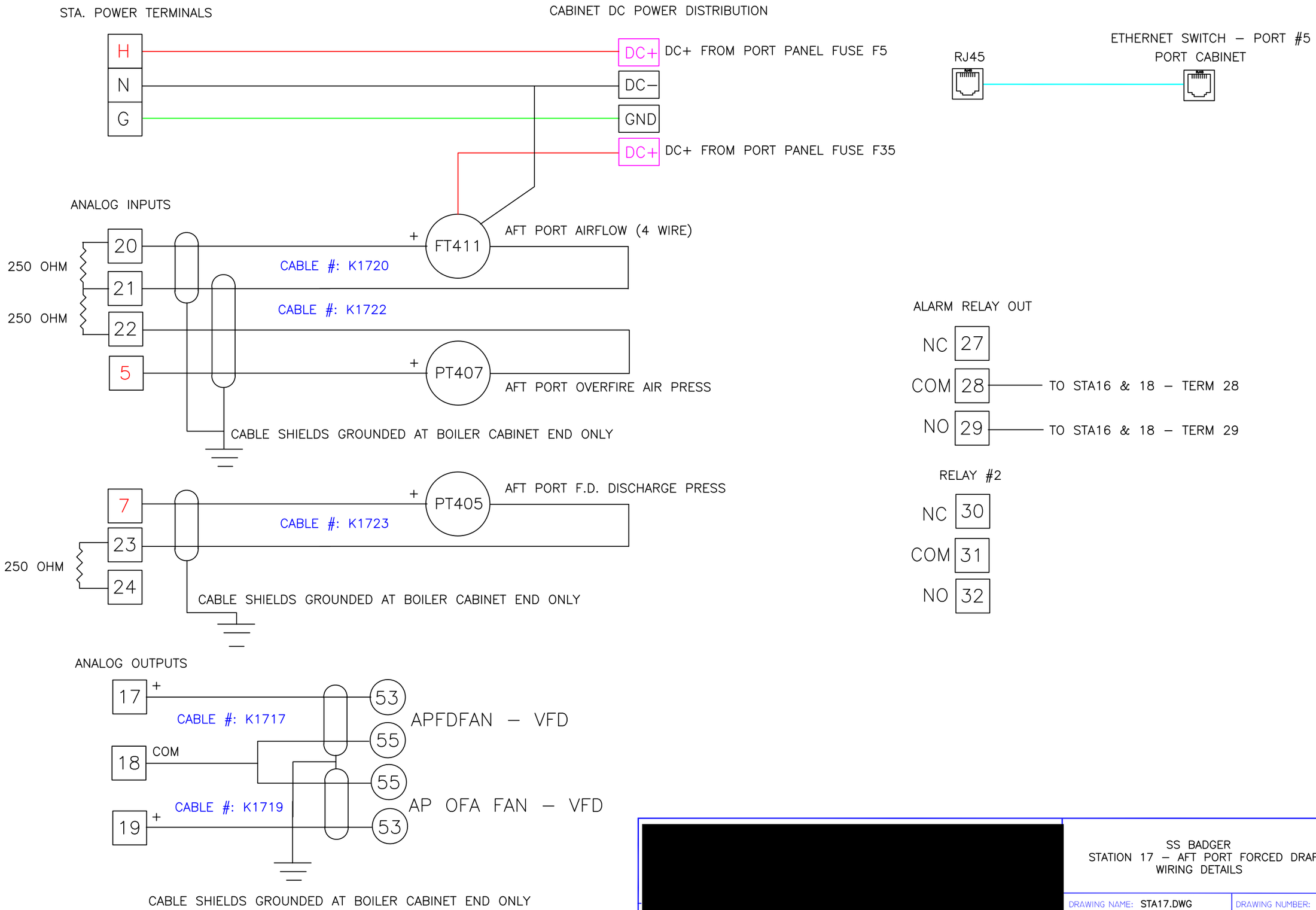

[redacted]

SS BADGER
STATION 17 – AFT PORT FORCED DRAFT
WIRING DETAILS

©

DRAWING NAME: STA17.DWG		DRAWING NUMBER:
BY: JCHLLC	DATE: 1/28/14	SHEET ___ OF ___

CONTAINS CONFIDENTIAL BUSINESS INFORMATION

REV.

STA. POWER TERMINALS

CABINET DC POWER DISTRIBUTION

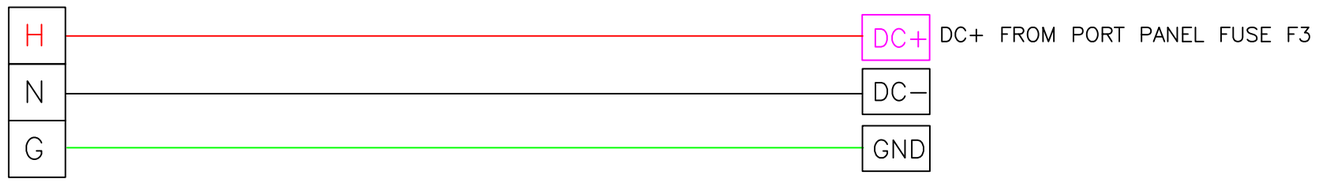

ETHERNET SWITCH – PORT #3
PORT CABINET

ANALOG OUTPUTS

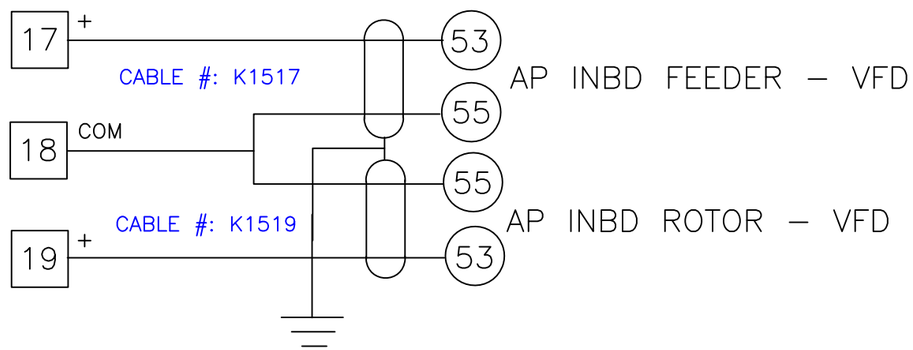

CABLE SHIELDS GROUNDED AT BOILER CABINET END ONLY

ANALOG OUTPUTS

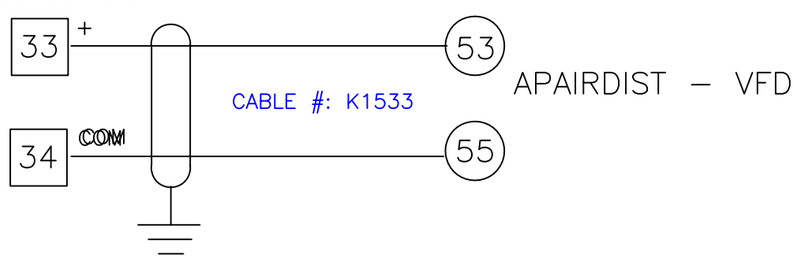

CABLE SHIELDS GROUNDED AT BOILER CABINET END ONLY

ALARM RELAY OUT

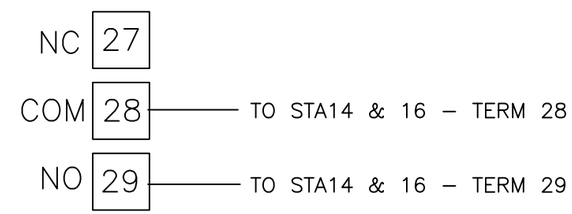

RELAY #2

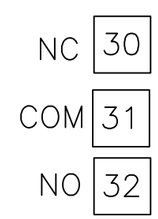

[redacted]

SS BADGER
STATION 15 – AFT PORT INBD FEEDER
WIRING DETAILS

©

DRAWING NAME: STA15.DWG		DRAWING NUMBER:
BY: JCHLLC	DATE: 1/30/14	SHEET ___ OF ___

US EPA ARCHIVE DOCUMENT

CONTAINS CONFIDENTIAL BUSINESS INFORMATION

REV.

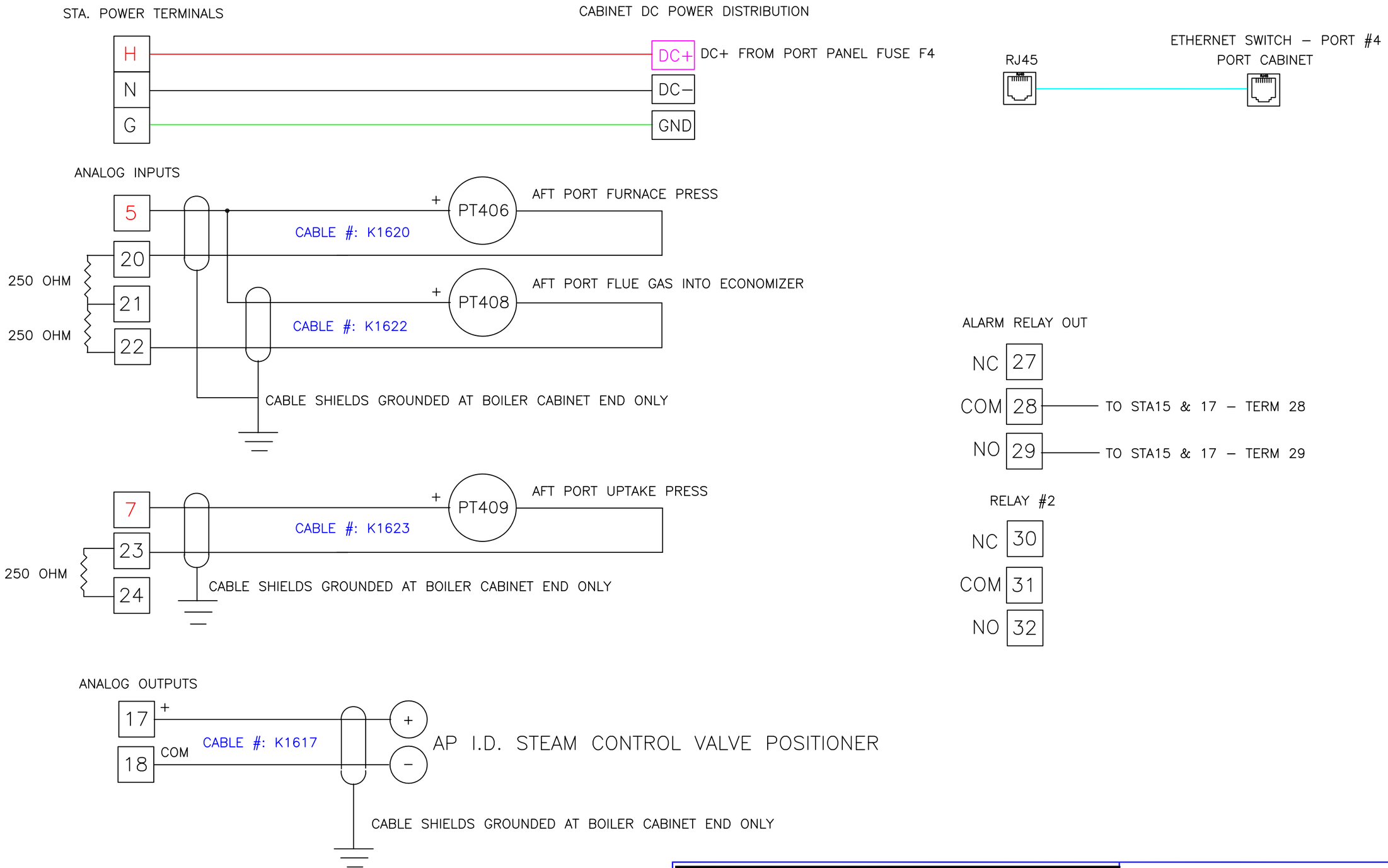

[redacted]

SS BADGER
STATION 16 – AFT PORT INDUCED DRAFT
WIRING DETAILS

©

DRAWING NAME: STA16.DWG		DRAWING NUMBER:
BY: JCHLLC	DATE: 1/30/14	SHEET ___ OF ___

US EPA ARCHIVE DOCUMENT

US EPA ARCHIVE DOCUMENT

CONTAINS CONFIDENTIAL BUSINESS INFORMATION

REV.

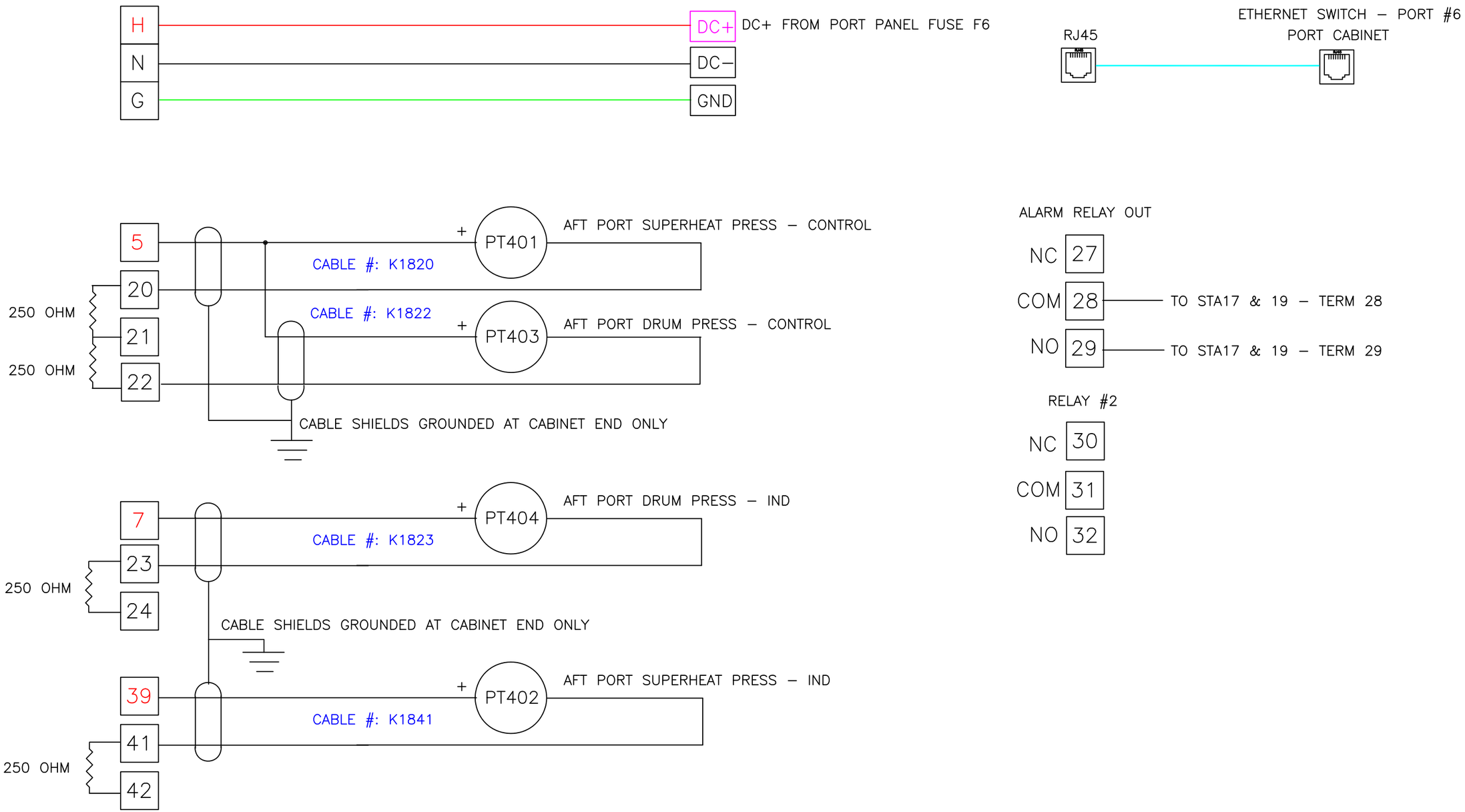

[redacted]

SS BADGER
STATION 18 – AFT PORT MASTER
WIRING DETAILS

©

DRAWING NAME: STA18.DWG		DRAWING NUMBER:
BY: JCHLLC	DATE: 1/28/14	SHEET ___ OF ___

REV	DESCRIPTION	DATE	BY
A	CHANGED SUFFIX FROM HB TO IB	1/6/14	CR

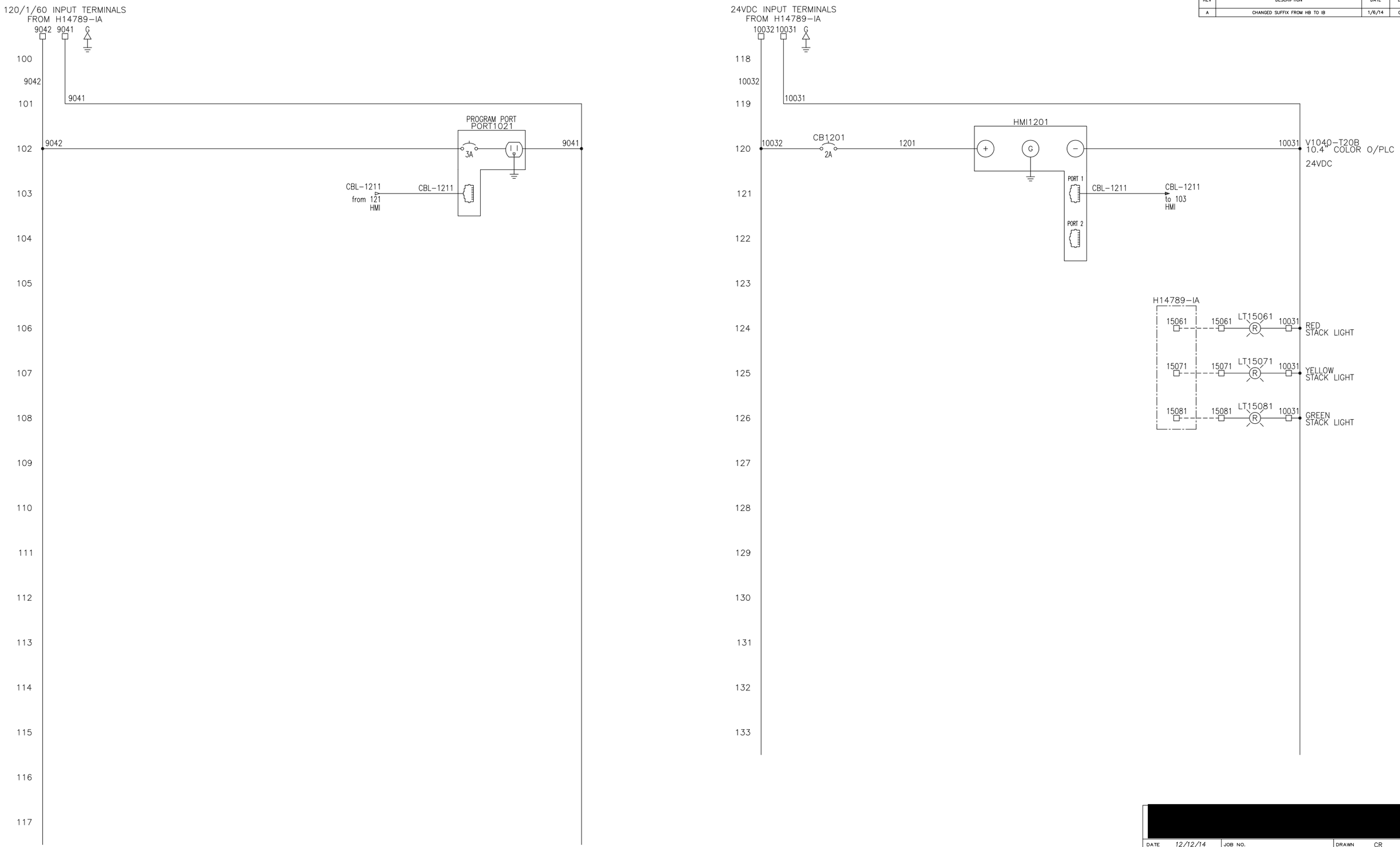

[redacted]

DATE 12/12/14	JOB NO. H14789-IB	DRAWN CR	
SCALE N/A		BOM = 1	DWG = 1

TITLE
120VAC/24VDC WIRING DIAGRAM
HMI OP-STATION

CUST. LAKE MICHIGAN TRANS-LAKE SHORTCUT, INC.

SHEET 1 OF 3	DWG. NO. H14789IB-D00	REV. A

CONTAINS CONFIDENTIAL BUSINESS INFORMATION

CONTAINS CONFIDENTIAL BUSINESS INFORMATION

REV	DESCRIPTION	DATE	BY
A	CHANGED SUFFIX FROM HB TO IB	1/6/14	CR

US EPA ARCHIVE DOCUMENT

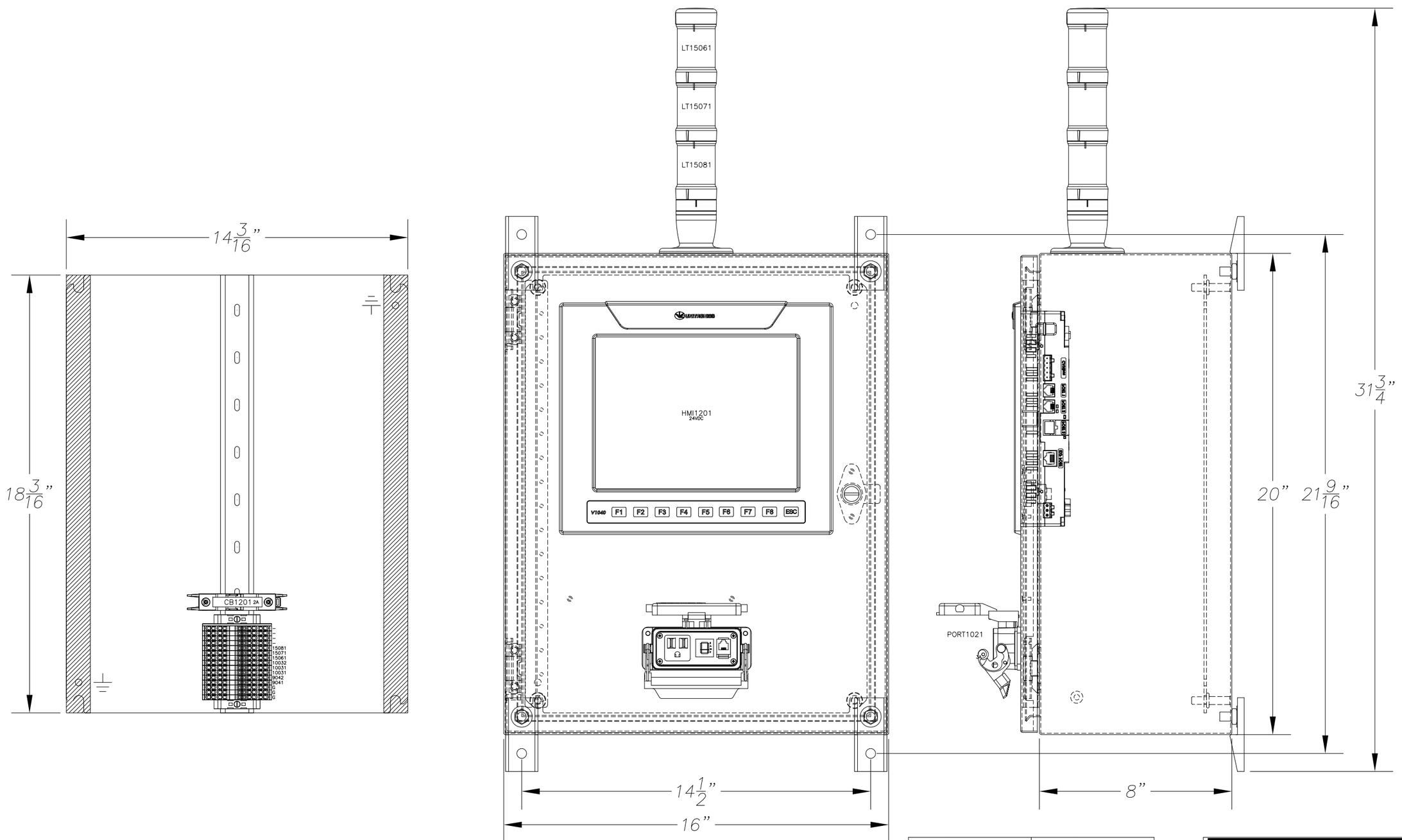

VOLTAGE:	120 VOLT
PHASE & FREQ.:	1PH., 60HZ
FULL LOAD CURRENT:	4 AMP
ENCLOSURE RATING:	TYPE 4
SCHEMATIC:	H14789IB-D00
MFG. BY:	JP Motors and Drives

[redacted]

DATE 12/12/14	JOB NO. H14789-IB	DRAWN CR	
SCALE N/A		BOM = 1	DWG = 1

TITLE

PANEL LAYOUT

HMI OP-STATION

CUST. LAKE MICHIGAN TRANS-LAKE SHORTCUT, INC.

SHEET 2 OF 3	DWG. NO. H14789IB-D00	REV. A

REV	DESCRIPTION	DATE	BY
A	CHANGED SUFFIX FROM HB TO IB	1/6/14	CR

ITEM	QTY	PART #	MANUFACTURE	DESCRIPTION	DESCRIPTOR
1	1	CSD20168	HOFFMAN	20"x16"x8" NEMA 4/12 ENCLOSURE	.
2	1	CP2016G	HOFFMAN	GALVANIZED SUB PANEL	.
3	1	CMFK	HOFFMAN	FOOT KIT	.
4	1	DPI-RJ11-R16	MENCOM	PROG. PORT, SIMPLEX OUTLET, RJ12-F/F, 3A CB	PORT1021
5	1	FAZ-C2/1-NA-SP	EATON	1 POLE 2A UL489 CIRCUIT BREAKER, C-CURVE	CB1201
6	1	V1040-T20B	UNITRONICS	V1040 O/PLC 10.4" COLOR TOUCH SCREEN	HMI1201
7	1	2GB MICROSD	TRANSCEND	2GB MICROSD CARD	HMI1201
8	1	SL4-PIB-EMH	EATON	STACK LIGHT BASE	LT15061-15081
9	1	SL4-L24-R	EATON	24VDC RED LED STACK LIGHT MODULE	LT15061
10	1	SL4-L24-Y	EATON	24VDC YELLOW LED STACK LIGHT MODULE	LT15071
11	1	SL4-L24-G	EATON	24VDC GREEN LED STACK LIGHT MODULE	LT15081
12	12	XBPT25D22	EATON	5.2mm 4-WIRE SPRING CAGE TERMINAL	.
13	3	XBPT25D22PE	EATON	5.2mm 4-WIRE SPRING CAGE GROUND TERMINAL	.
14	1	XBACPT25D22	EATON	END PLATE FOR 5.2mm 4-WIRE SPRING CAGE TERMINAL	.
15	2	XBAES35C	EATON	SCREW ON END STOP	.
16	3'	F.75X1.5LG6	PANDUIT	0.75"x1.5" LIGHT GRAY WIREWAY	.
17	3'	C.75LG6	PANDUIT	0.75" LIGHT GRAY WIREWAY COVER	.
18	1.5'	0801733	PHOENIX	35mm DIN RAIL	.
19					
20					
21					
22					
23					
24					
25					
26					
27					
28					
29					
30					
31					
32					
33					
34					
35					
36					
37					
38					
39					
40					
41					
42					
43					
44					
45					
46					
47					
48					
49					
50					
51					
52					
53					
54					
55					
56					

ITEM	QTY	PART #	MANUFACTURE	DESCRIPTION	DESCRIPTOR
57					
58					
59					
60					
61					
62					
63					
64					
65					
66					
67					
68					
69					
70					
71					
72					
73					
74					
75					
76					
77					
78					
79					
80					
81					
82					
83					
84					
85					
86					
87					
88					
89					
90					
91					
92					
93					
94					
95					
96					
97					
98					
99					
100					
101					
102					
103					
104					
105					

[redacted]

DATE 12/12/14	JOB NO. H14789-IB	DRAWN CR	
SCALE N/A		BOM = 1	DWG = 1

TITLE

BILL OF MATERIALS

HMI OP-STATION

CUST. LAKE MICHIGAN TRANS-LAKE SHORTCUT, INC.

SHEET 3 OF 3	DWG. NO. H14789IB-D00	REV. A

CONTAINS CONFIDENTIAL BUSINESS INFORMATION

US EPA ARCHIVE DOCUMENT

REV.

CONTAINS CONFIDENTIAL BUSINESS INFORMATION

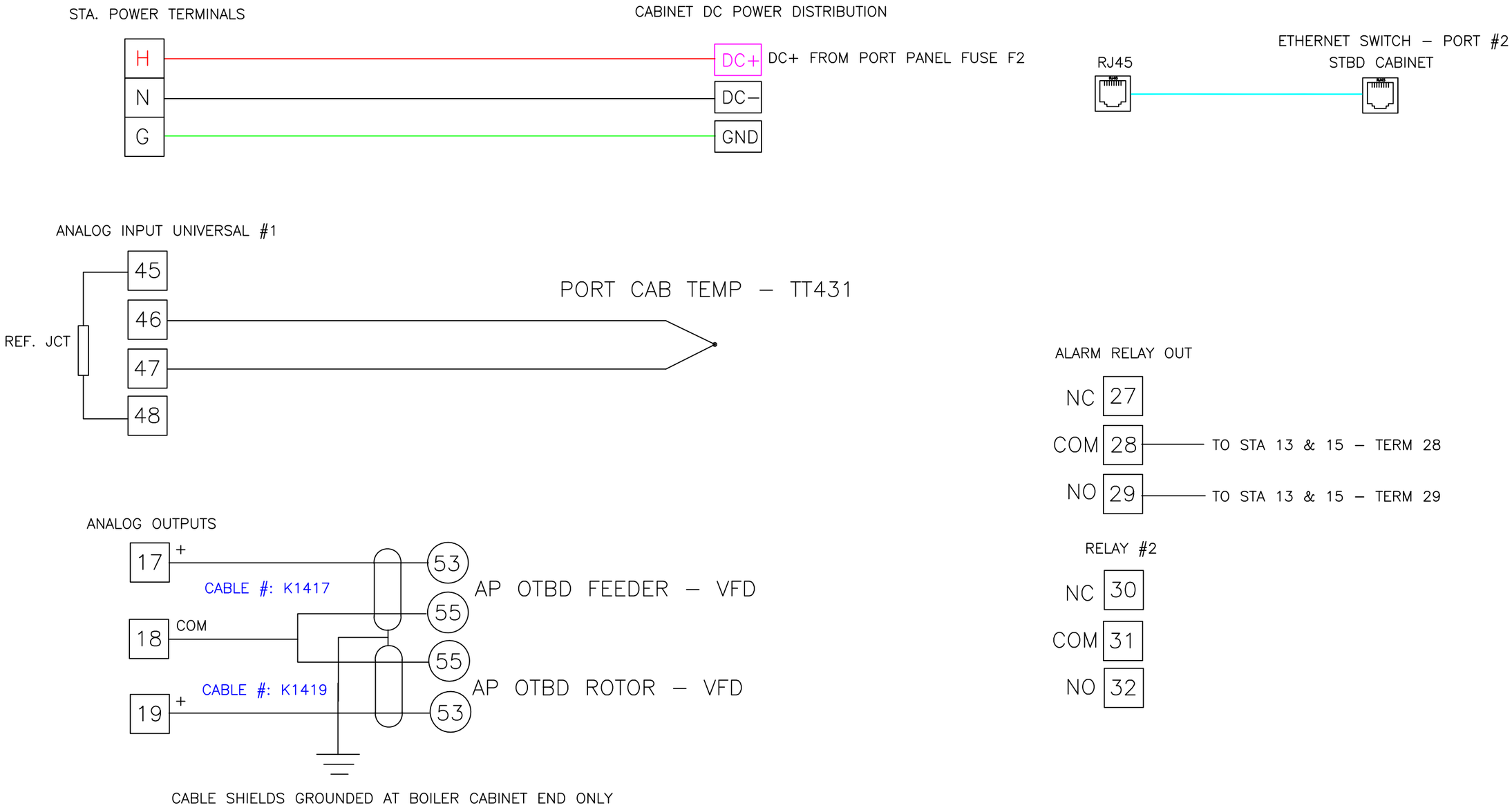

CABLE SHIELDS GROUNDED AT BOILER CABINET END ONLY

[redacted]

SS BADGER
STATION 14 – AFT PORT OTBD FEEDER
WIRING DETAILS

©

DRAWING NAME: STA14.DWG		DRAWING NUMBER:
BY: JCHLLC	DATE: 1/30/14	SHEET ___ OF ___

CONTAINS CONFIDENTIAL BUSINESS INFORMATION

REV.

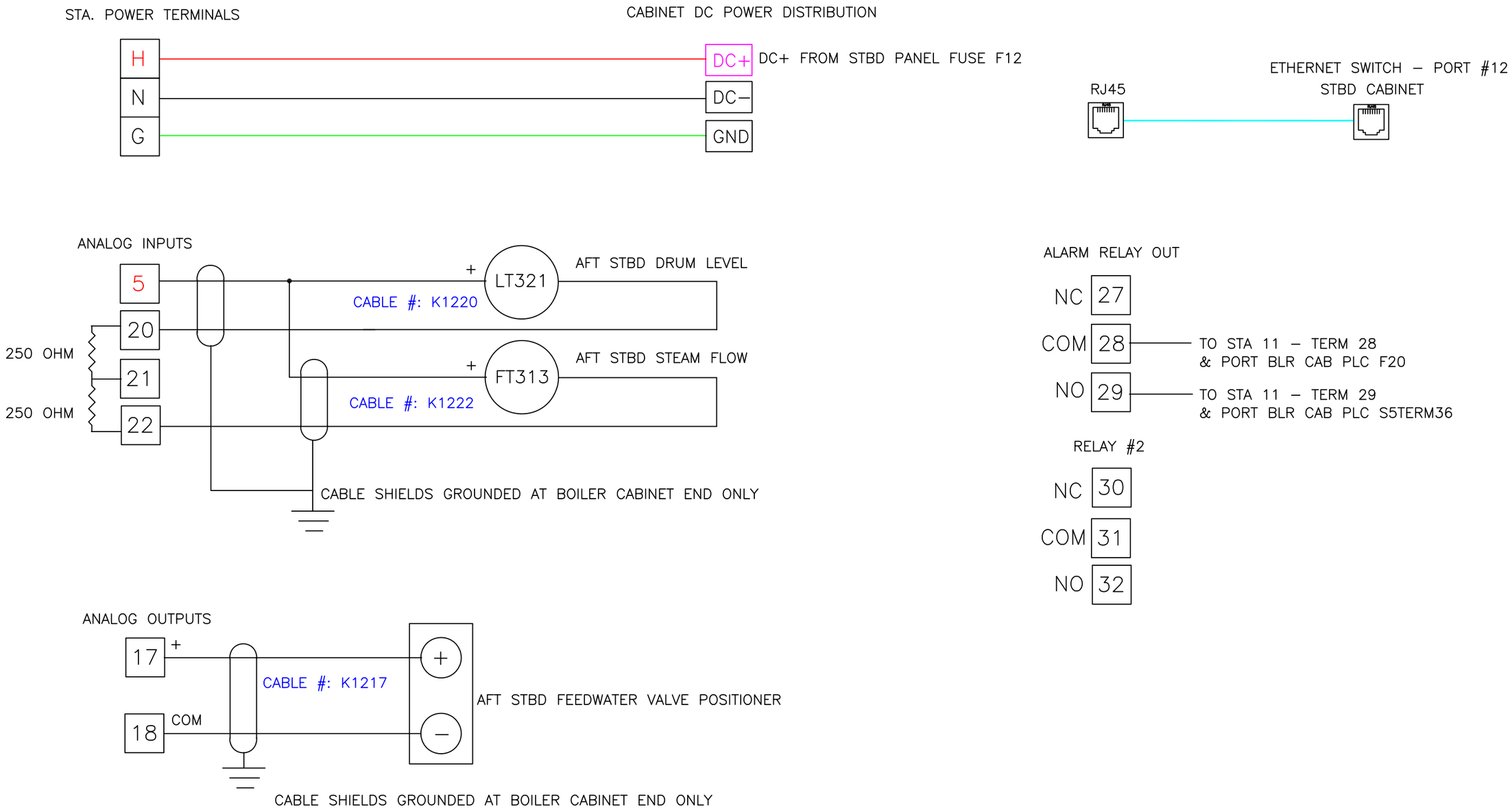

[redacted]

SS BADGER
STATION 12 – AFT STBD DRUM LEVEL
WIRING DETAILS

©

DRAWING NAME: STA12.DWG		DRAWING NUMBER:
BY: JCHLLC	DATE: 1/29/14	SHEET ___ OF ___

US EPA ARCHIVE DOCUMENT

US EPA ARCHIVE DOCUMENT

CONTAINS CONFIDENTIAL BUSINESS INFORMATION

REV.

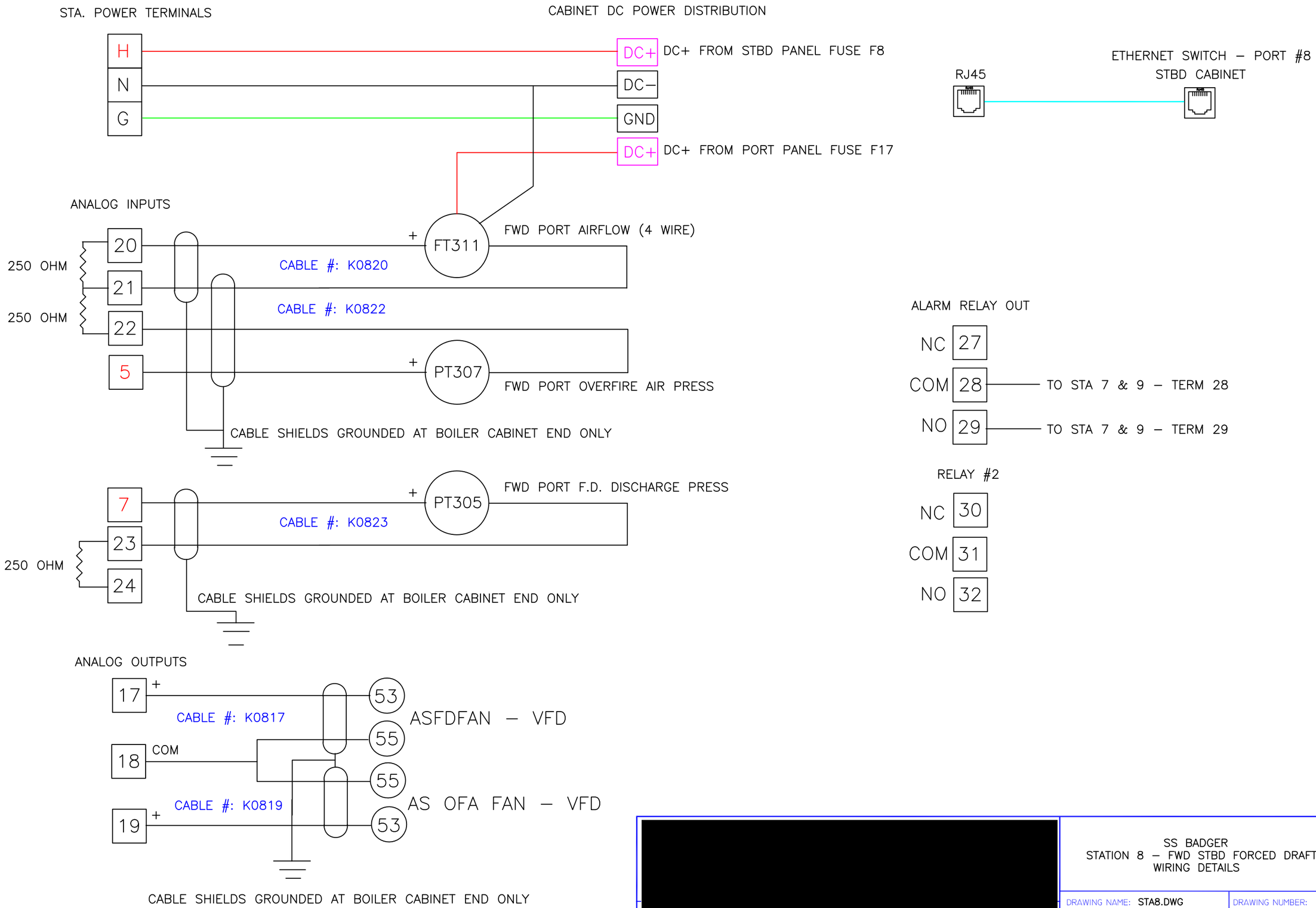

[redacted]

SS BADGER
STATION 8 – FWD STBD FORCED DRAFT
WIRING DETAILS

©

DRAWING NAME: STA8.DWG		DRAWING NUMBER:
BY: JCHLLC	DATE: 1/29/14	SHEET ___ OF ___

US EPA ARCHIVE DOCUMENT

CONTAINS CONFIDENTIAL BUSINESS INFORMATION

REV.

STA. POWER TERMINALS

CABINET DC POWER DISTRIBUTION

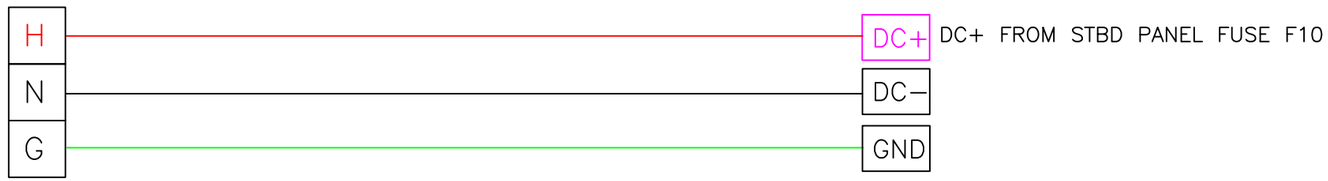

ETHERNET SWITCH – PORT #10
STBD CABINET

ANALOG OUTPUTS

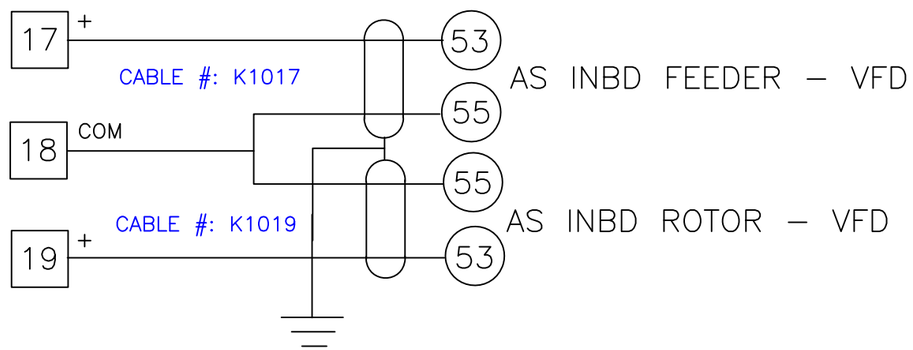

CABLE SHIELDS GROUNDED AT BOILER CABINET END ONLY

ANALOG OUTPUTS

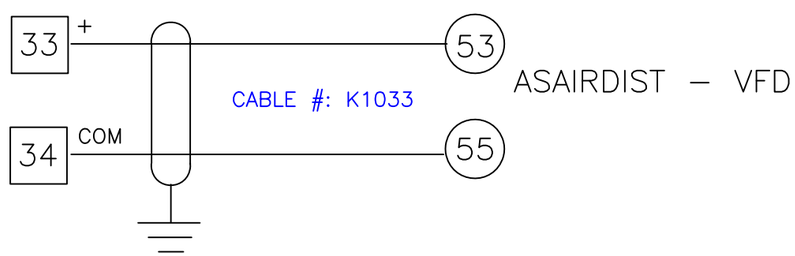

CABLE SHIELDS GROUNDED AT BOILER CABINET END ONLY

ALARM RELAY OUT

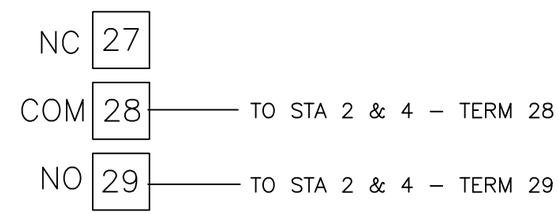

RELAY #2

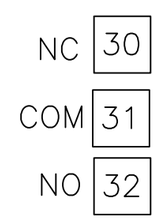

[redacted]

SS BADGER
STATION 10 – AFT STBD INBD FEEDER
WIRING DETAILS

©

DRAWING NAME: STA10.DWG		DRAWING NUMBER:
BY: JCHLLC	DATE: 1/30/14	SHEET ___ OF ___

CONTAINS CONFIDENTIAL BUSINESS INFORMATION

REV.

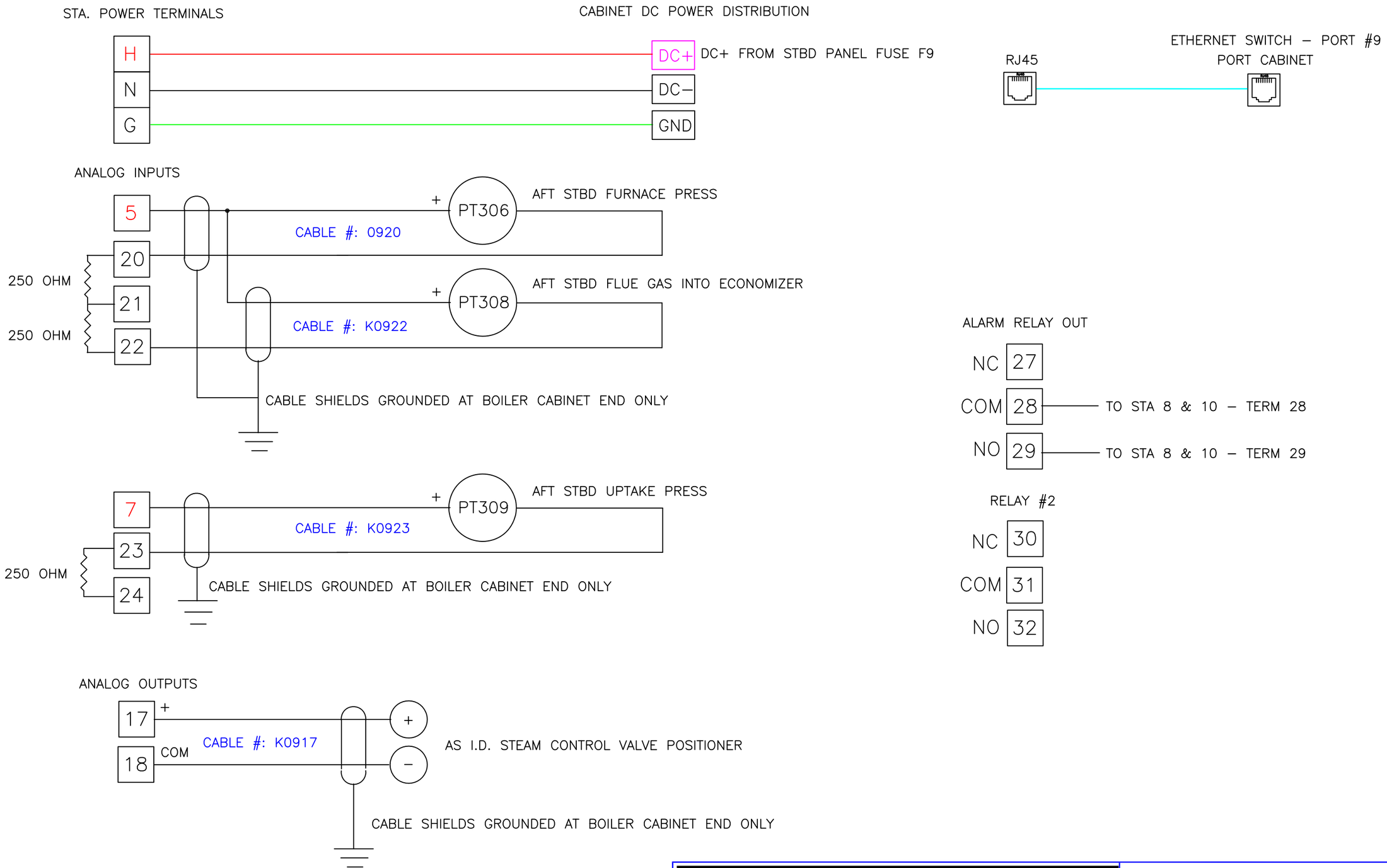

[redacted]

SS BADGER
STATION 9 – AFT STBD INDUCED DRAFT
WIRING DETAILS

©

DRAWING NAME: STA9.DWG		DRAWING NUMBER:
BY: JCHLLC	DATE: 1/30/14	SHEET ___ OF ___

US EPA ARCHIVE DOCUMENT

CONTAINS CONFIDENTIAL BUSINESS INFORMATION

REV.

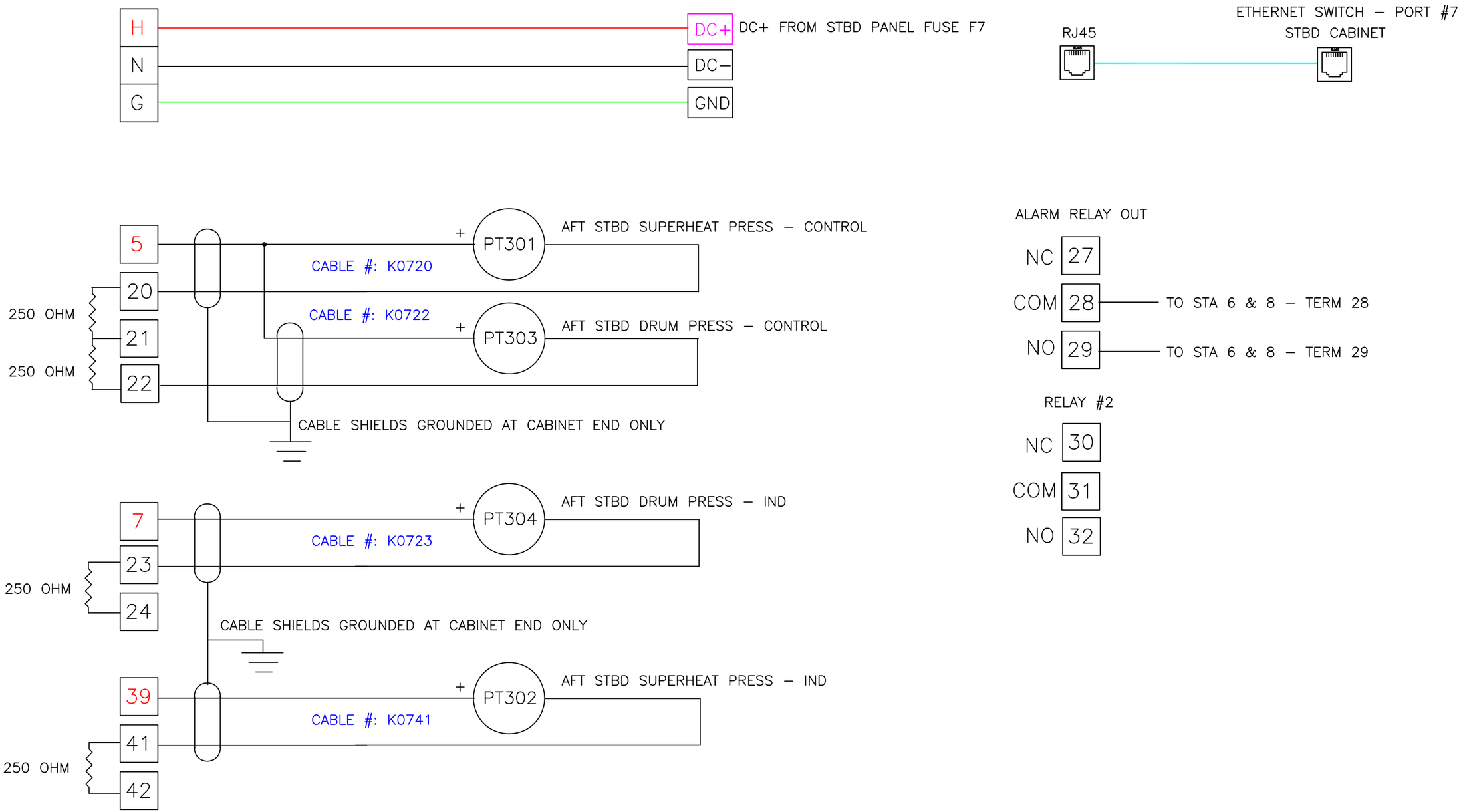

[redacted]

SS BADGER
STATION 7 – AFT STBD MASTER
WIRING DETAILS

©

DRAWING NAME: STA7.DWG		DRAWING NUMBER:
BY: JCHLLC	DATE: 1/29/14	SHEET ___ OF ___

US EPA ARCHIVE DOCUMENT

US EPA ARCHIVE DOCUMENT

REV.

CONTAINS CONFIDENTIAL BUSINESS INFORMATION

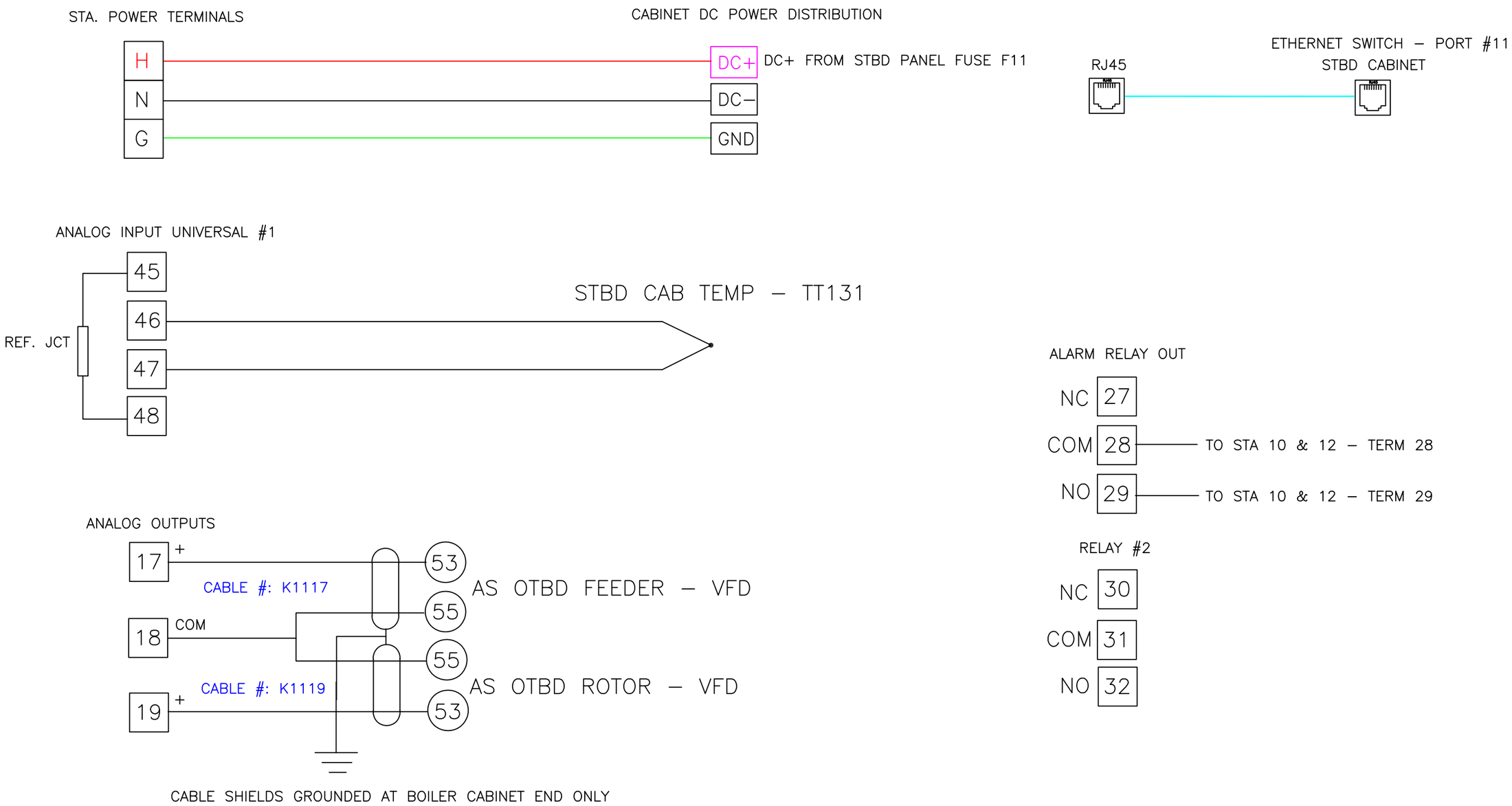

[redacted]

SS BADGER
STATION 11 – AFT STBD OTBD FEEDER
WIRING DETAILS

©

DRAWING NAME: STA11.DWG		DRAWING NUMBER:
BY: JCHLLC	DATE: 1/30/14	SHEET ___ OF ___

US EPA ARCHIVE DOCUMENT

CONTAINS CONFIDENTIAL BUSINESS INFORMATION

REV.

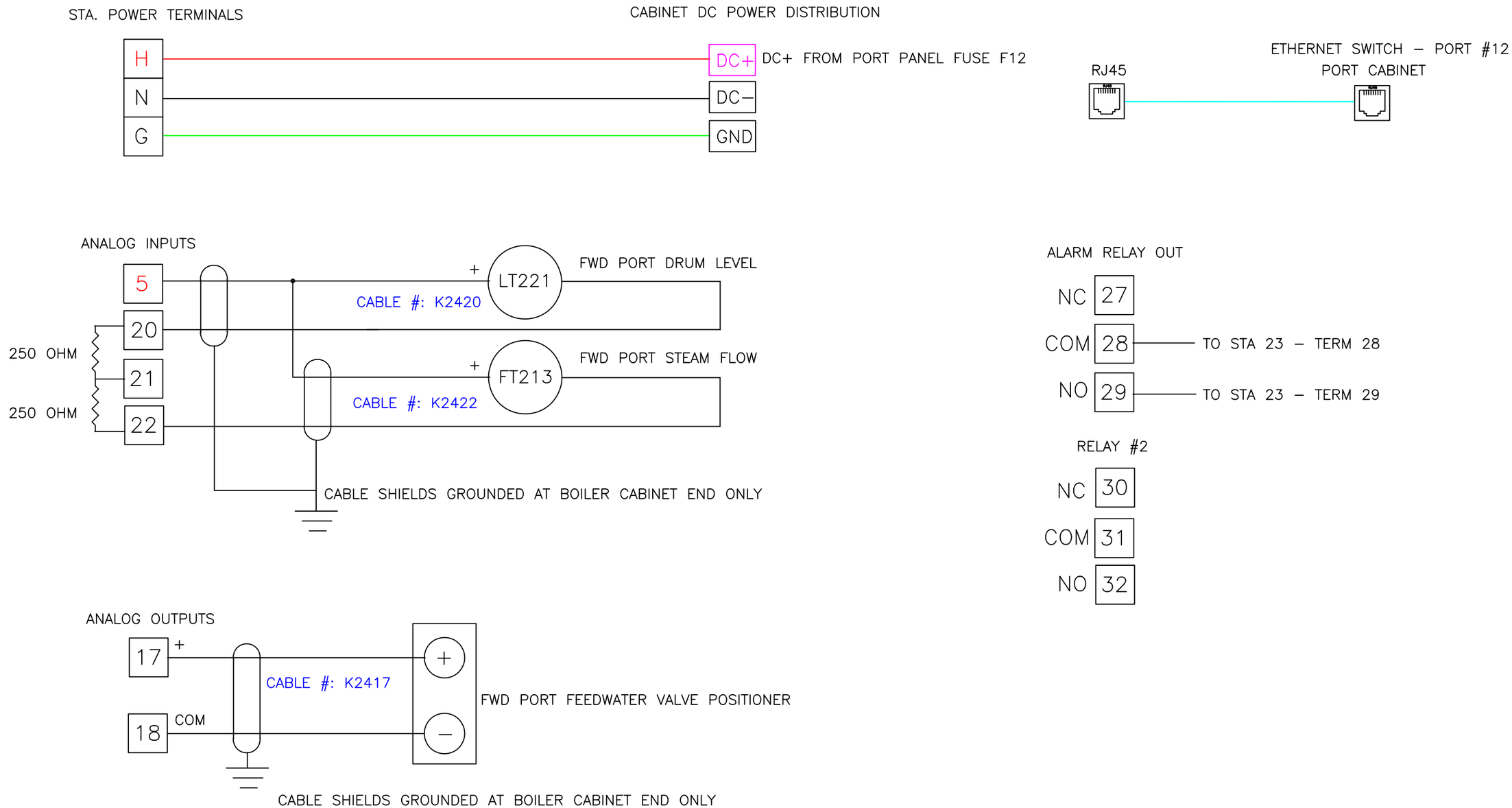

[redacted]

SS BADGER
STATION 24 – FWD PORT DRUM LEVEL
WIRING DETAILS

©

DRAWING NAME: STA24.DWG		DRAWING NUMBER:
BY: JCHLLC	DATE: 1/29/14	SHEET ___ OF ___

US EPA ARCHIVE DOCUMENT

CONTAINS CONFIDENTIAL BUSINESS INFORMATION

REV.

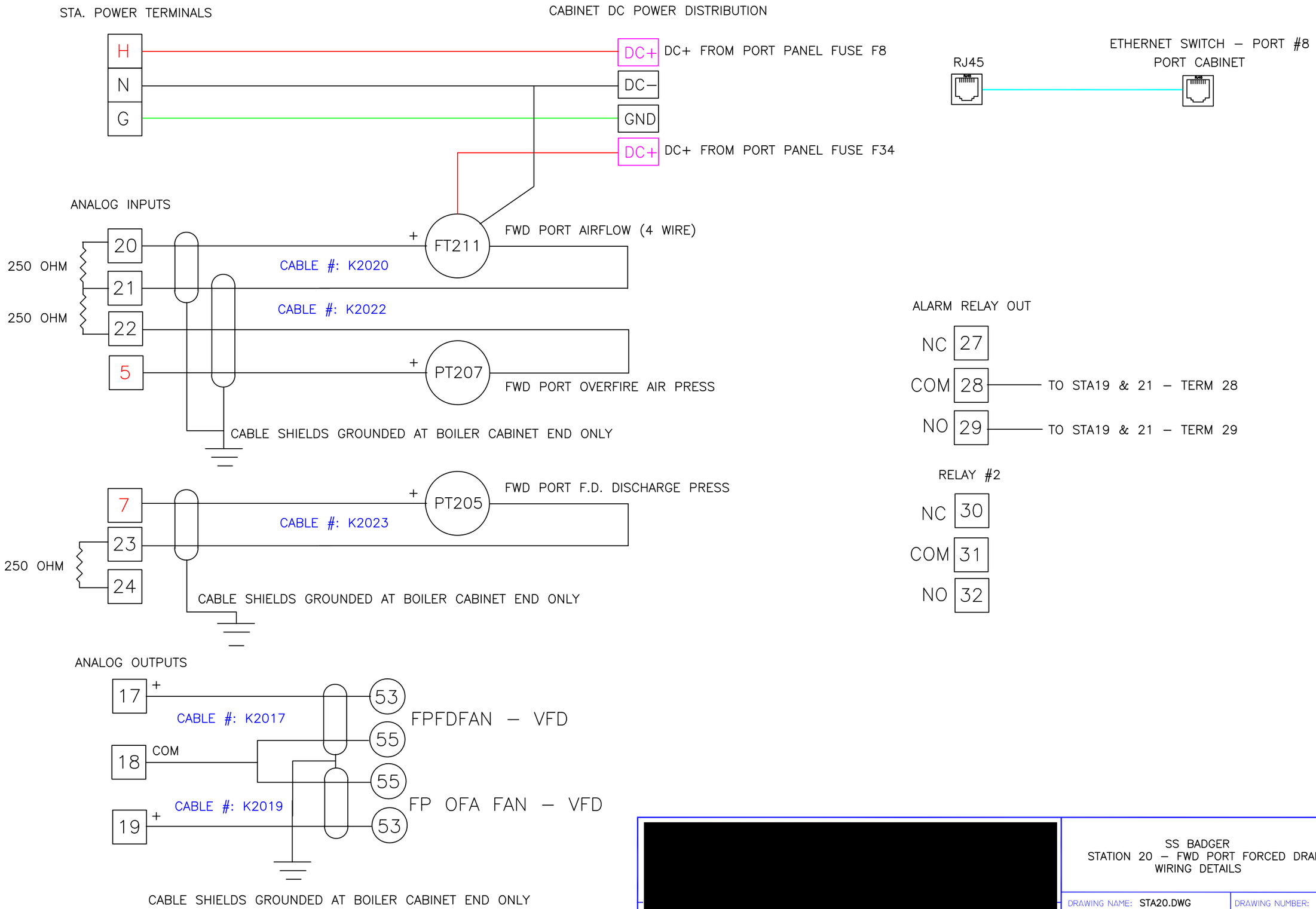

[redacted]

SS BADGER
STATION 20 – FWD PORT FORCED DRAFT
WIRING DETAILS

©

DRAWING NAME: STA20.DWG		DRAWING NUMBER:
BY: JCHLLC	DATE: 1/29/14	SHEET ___ OF ___

US EPA ARCHIVE DOCUMENT

CONTAINS CONFIDENTIAL BUSINESS INFORMATION

REV.

STA. POWER TERMINALS

CABINET DC POWER DISTRIBUTION

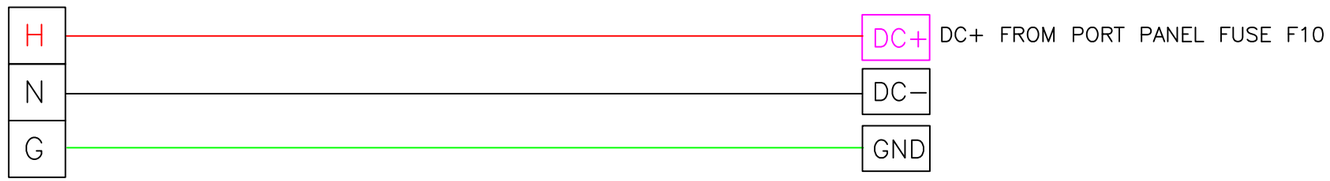

ETHERNET SWITCH – PORT #10
PORT CABINET

ANALOG OUTPUTS

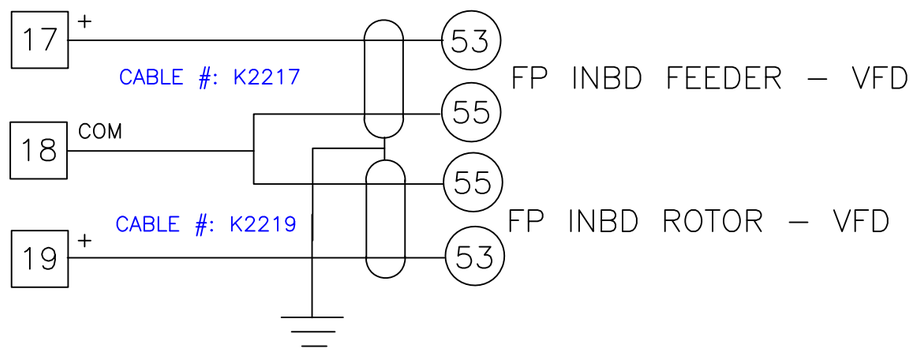

CABLE SHIELDS GROUNDED AT BOILER CABINET END ONLY

ANALOG OUTPUTS

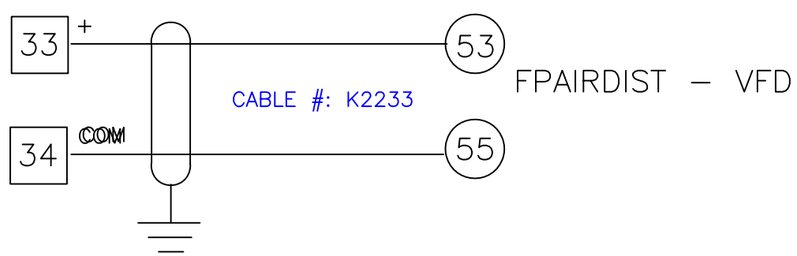

CABLE SHIELDS GROUNDED AT BOILER CABINET END ONLY

ALARM RELAY OUT

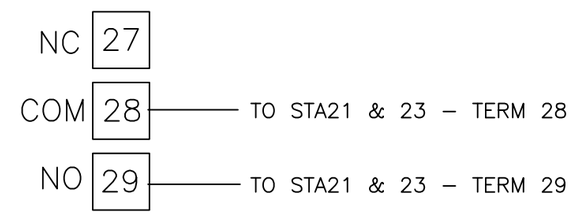

RELAY #2

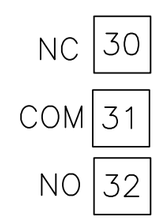

[redacted]

SS BADGER
STATION 22 – FWD PORT INBD FEEDER
WIRING DETAILS

©

DRAWING NAME: STA22.DWG		DRAWING NUMBER:
BY: JCHLLC	DATE: 1/30/14	SHEET ___ OF ___

CONTAINS CONFIDENTIAL BUSINESS INFORMATION

REV.

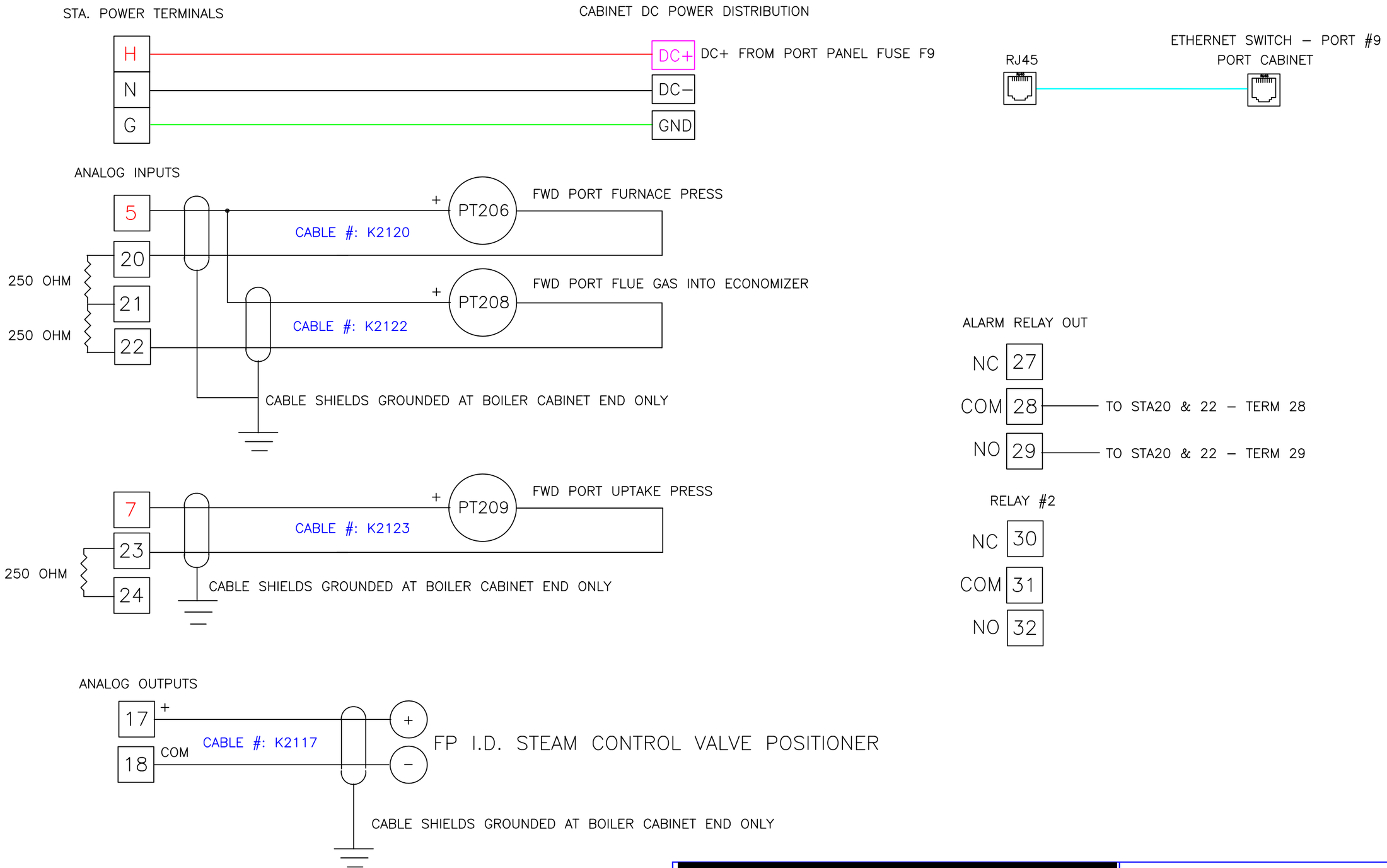

[redacted]

SS BADGER
STATION 21 – FWD PORT INDUCED DRAFT
WIRING DETAILS

©

DRAWING NAME: STA21.DWG		DRAWING NUMBER:
BY: JCHLLC	DATE: 1/30/14	SHEET ___ OF ___

US EPA ARCHIVE DOCUMENT

CONTAINS CONFIDENTIAL BUSINESS INFORMATION

REV.

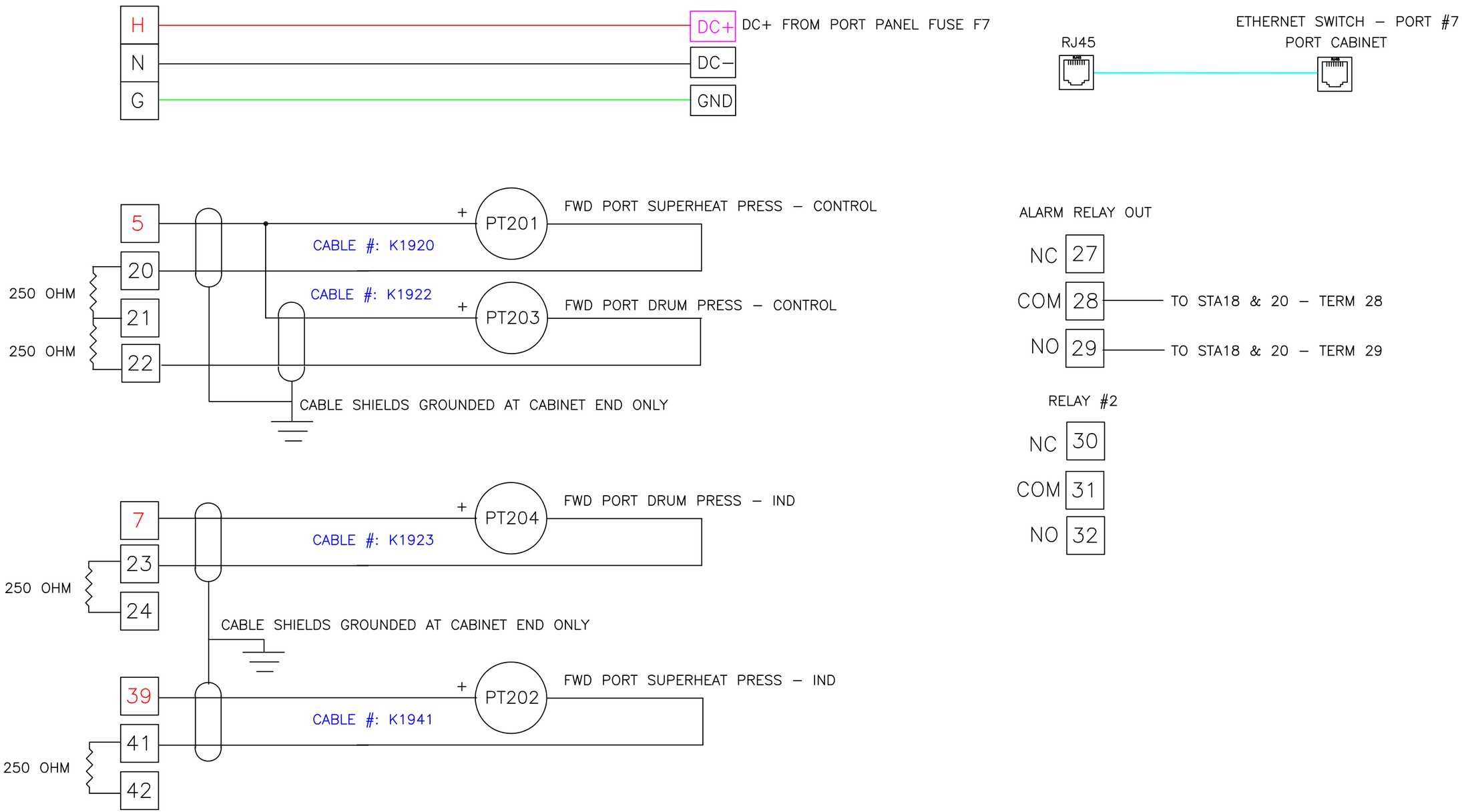

[redacted]

SS BADGER
STATION 19 – FWD PORT MASTER
WIRING DETAILS

©

DRAWING NAME: STA19.DWG		DRAWING NUMBER:
BY: JCHLLC	DATE: 1/28/14	SHEET ___ OF ___

US EPA ARCHIVE DOCUMENT

US EPA ARCHIVE DOCUMENT

CONTAINS CONFIDENTIAL BUSINESS INFORMATION

REV.

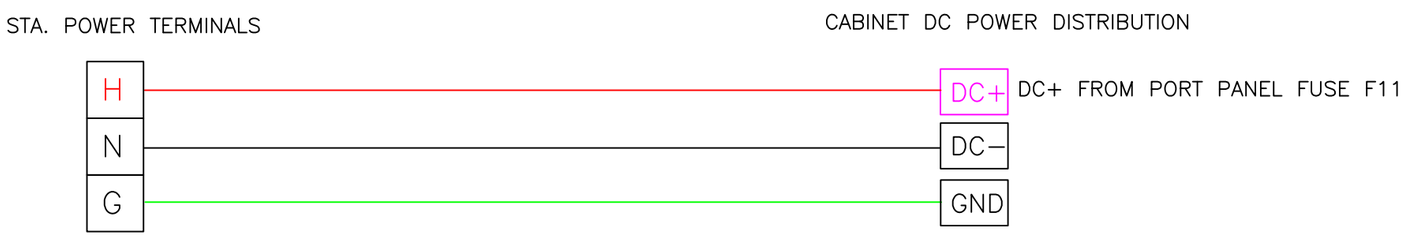

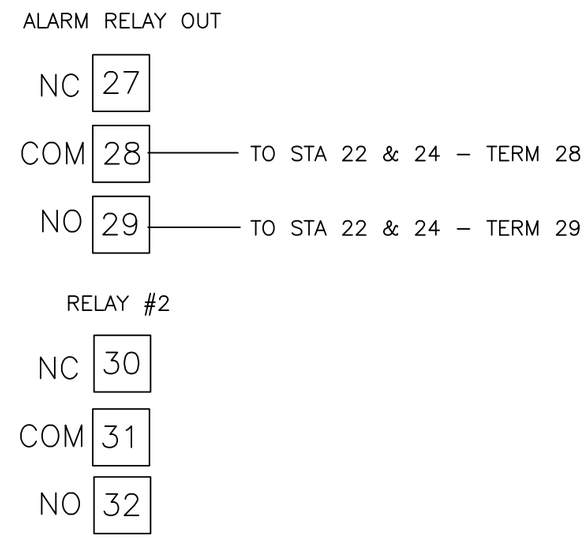

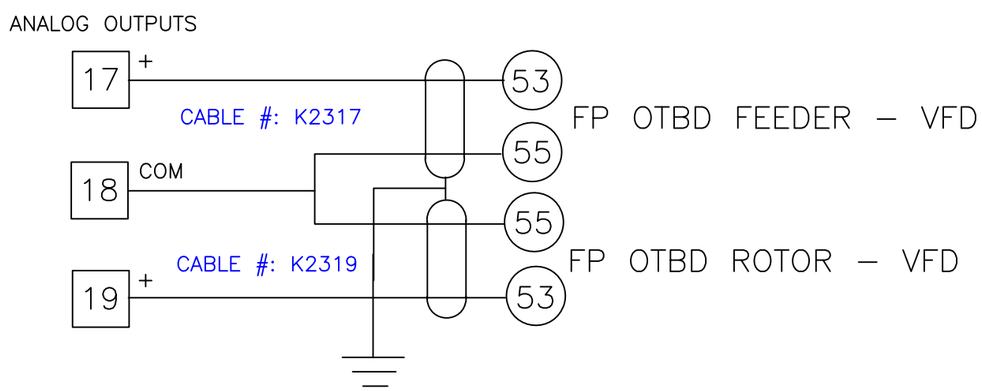

CABLE SHIELDS GROUNDED AT BOILER CABINET END ONLY

[redacted]

SS BADGER
STATION 23 – FWD PORT OTBD FEEDER
WIRING DETAILS

©

DRAWING NAME: STA23.DWG	DRAWING NUMBER:
BY: JCHLLC DATE: 1/30/14	SHEET ___ OF ___

US EPA ARCHIVE DOCUMENT

CONTAINS CONFIDENTIAL BUSINESS INFORMATION

REV.

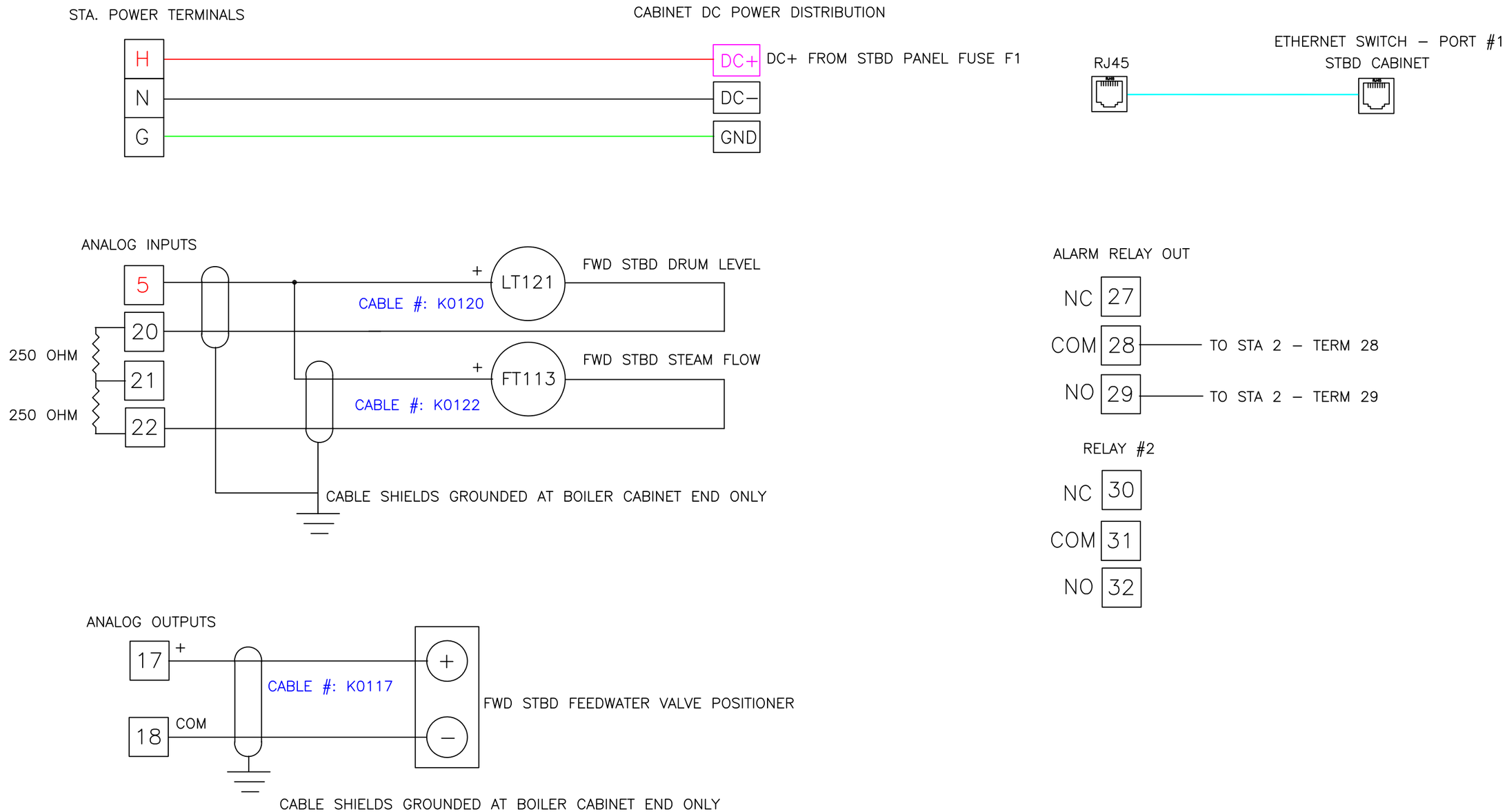

[redacted]

SS BADGER
STATION 1 – FWD STBD DRUM LEVEL
WIRING DETAILS

©

DRAWING NAME: STA1.DWG		DRAWING NUMBER:
BY: JCHLLC	DATE: 1/29/14	SHEET ___ OF ___

CONTAINS CONFIDENTIAL BUSINESS INFORMATION

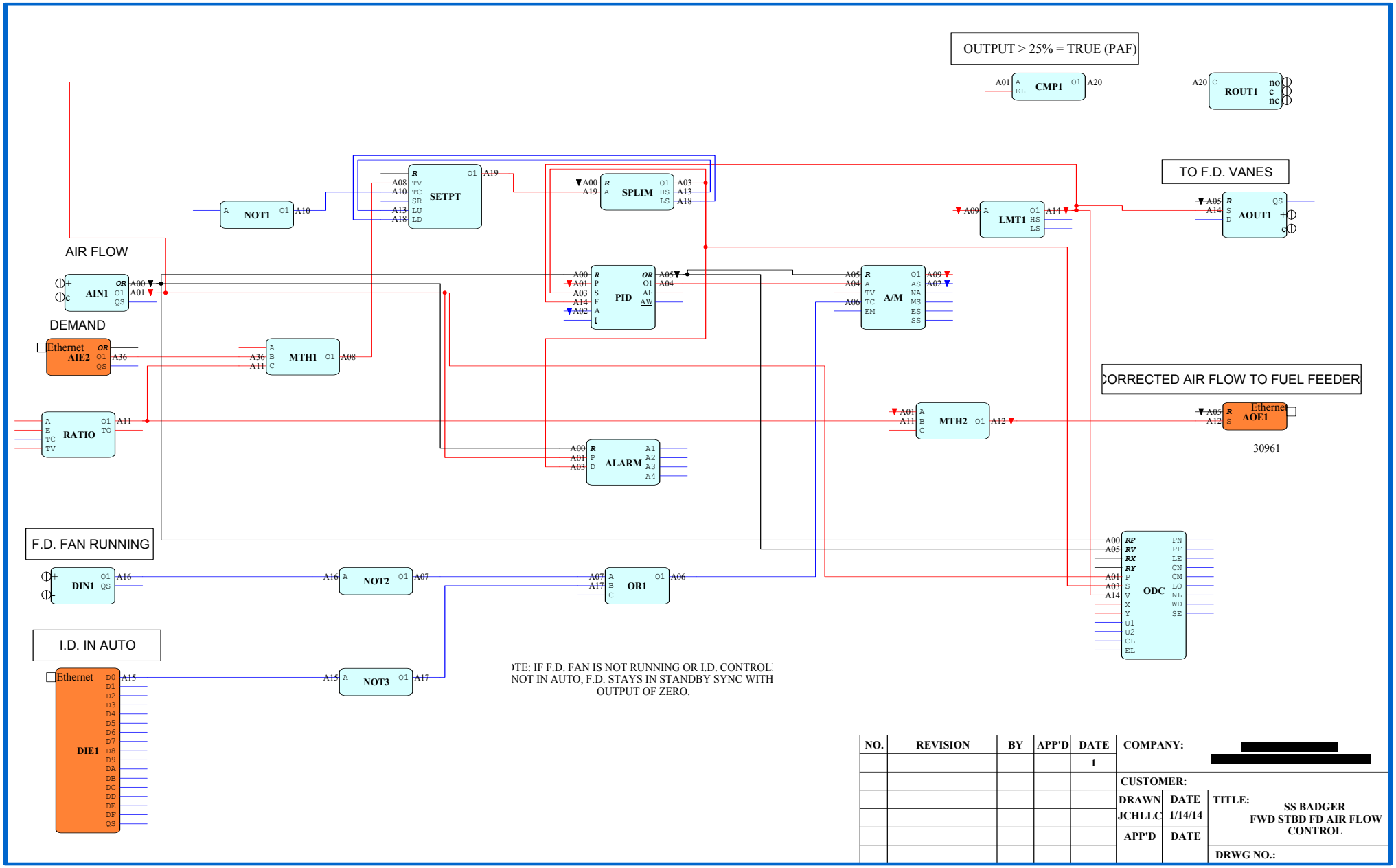

NO.	REVISION	BY	APP'D	DATE	COMPANY: [redacted]
				1	
					CUSTOMER:
					DRAWN JCHLLC / DATE 1/14/14 / TITLE: SS BADGER FWD STBD FD AIR FLOW CONTROL
					APP'D / DATE
					DRWG NO.:

US EPA ARCHIVE DOCUMENT

CONTAINS CONFIDENTIAL BUSINESS INFORMATION

REV.

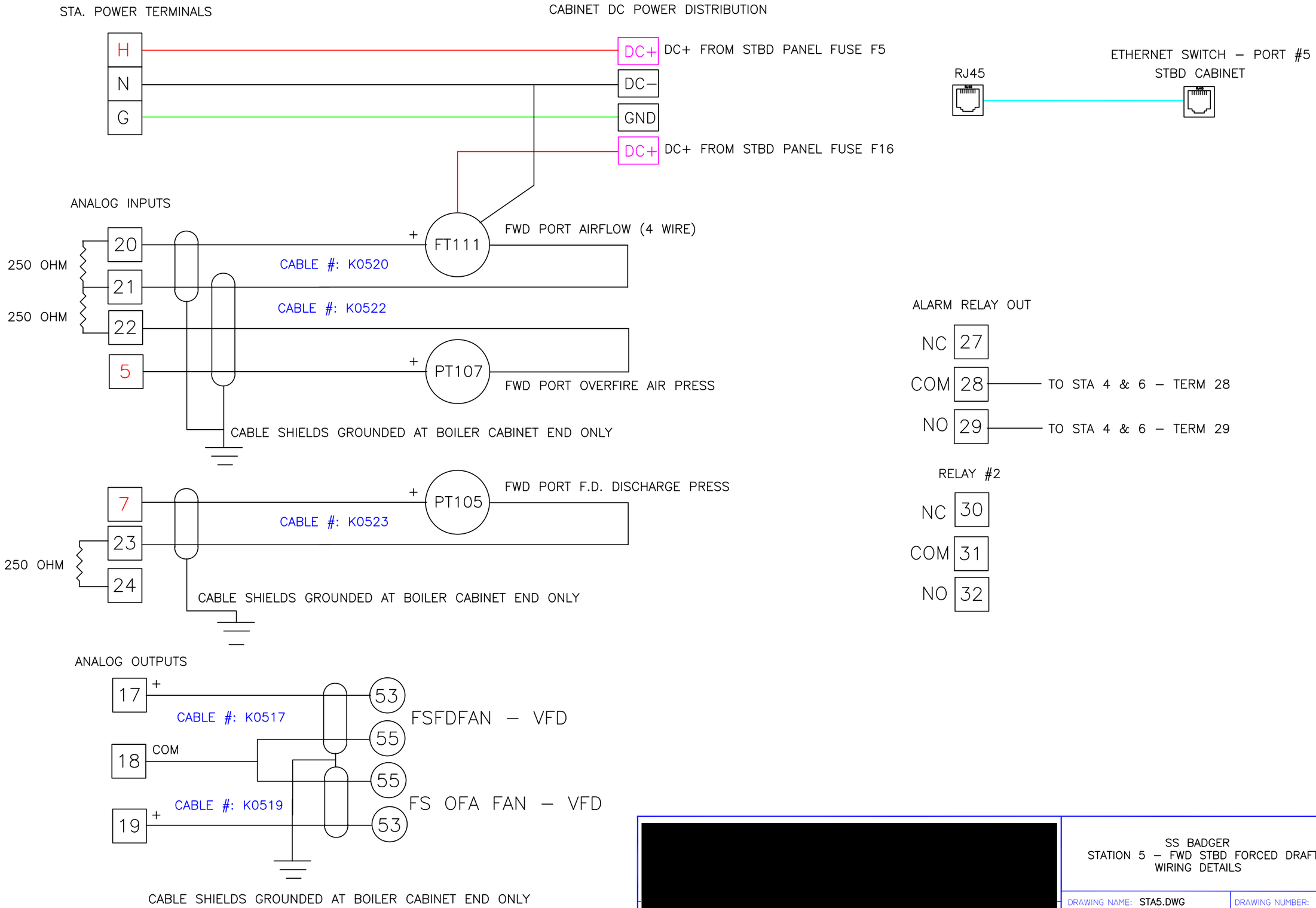

[redacted]

SS BADGER
STATION 5 – FWD STBD FORCED DRAFT
WIRING DETAILS

©

DRAWING NAME: STA5.DWG		DRAWING NUMBER:
BY: JCHLLC	DATE: 1/29/14	SHEET ___ OF ___

CONTAINS CONFIDENTIAL BUSINESS INFORMATION

REV.

STA. POWER TERMINALS

CABINET DC POWER DISTRIBUTION

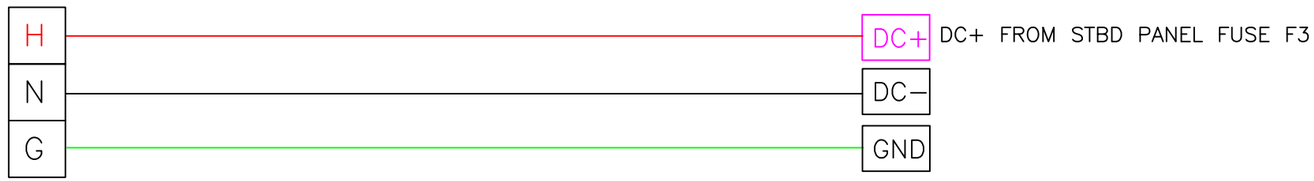

ETHERNET SWITCH – PORT #3
STBD CABINET

ANALOG OUTPUTS

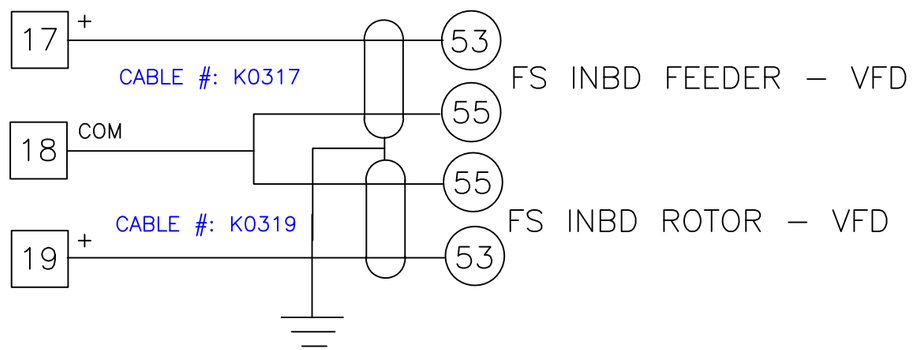

CABLE SHIELDS GROUNDED AT BOILER CABINET END ONLY

ANALOG OUTPUTS

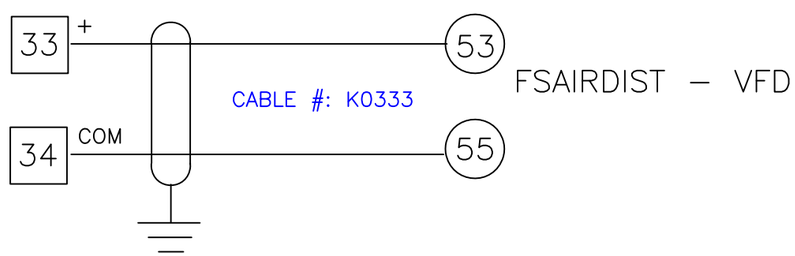

CABLE SHIELDS GROUNDED AT BOILER CABINET END ONLY

ALARM RELAY OUT

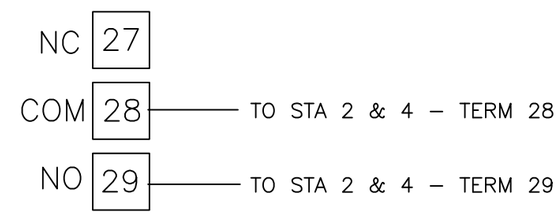

RELAY #2

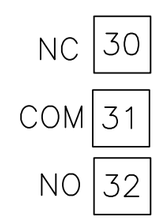

[redacted]

SS BADGER
STATION 3 – FWD STBD INBD FEEDER
WIRING DETAILS

©

DRAWING NAME: STA3.DWG		DRAWING NUMBER:
BY: JCHLLC	DATE: 1/30/14	SHEET ___ OF ___

US EPA ARCHIVE DOCUMENT

US EPA ARCHIVE DOCUMENT

CONTAINS CONFIDENTIAL BUSINESS INFORMATION

REV.

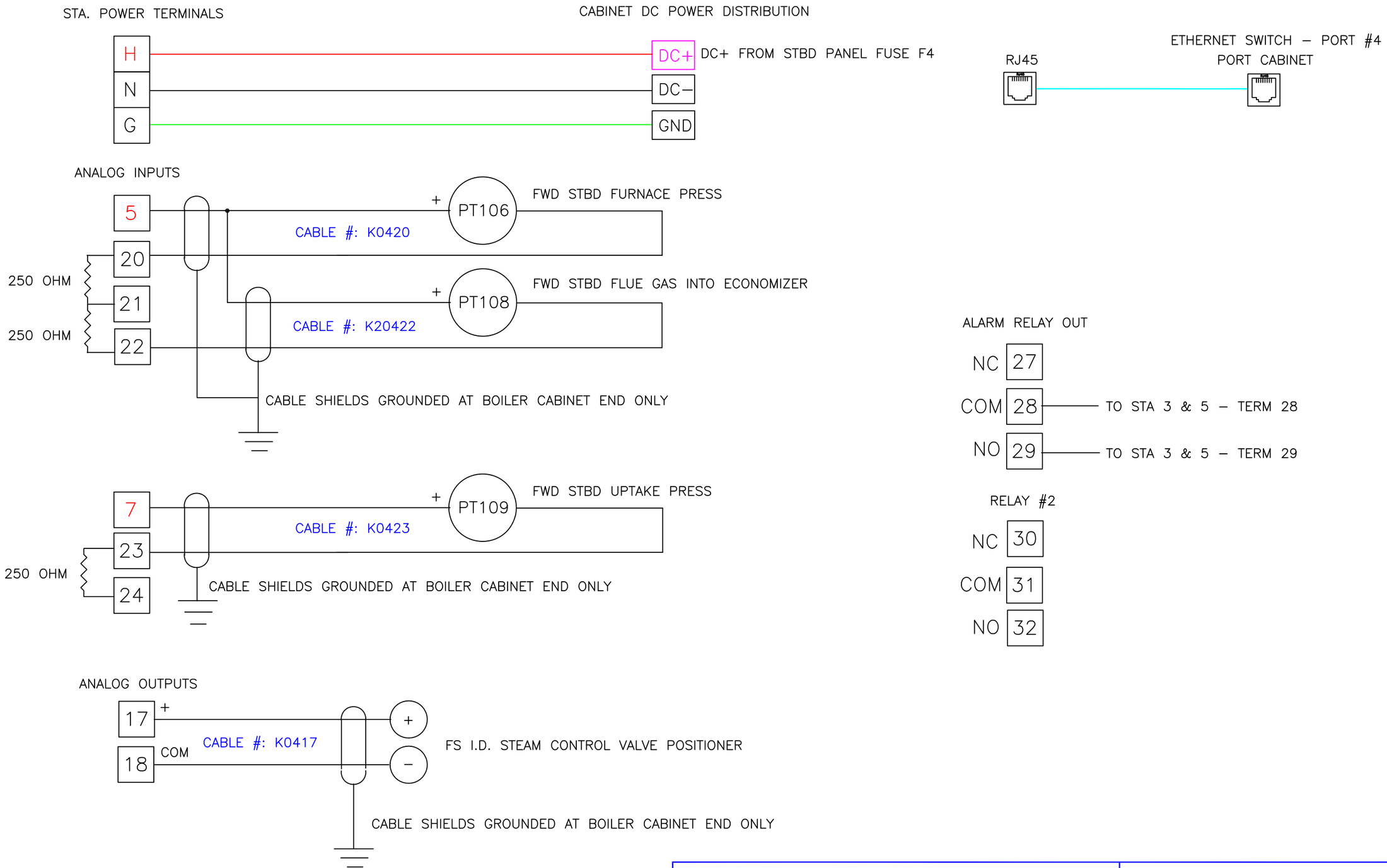

[redacted]

SS BADGER
STATION 4 – FWD STBD INDUCED DRAFT
WIRING DETAILS

©

DRAWING NAME: STA4.DWG		DRAWING NUMBER:
BY: JCHLLC	DATE: 1/30/14	SHEET ___ OF ___

CONTAINS CONFIDENTIAL BUSINESS INFORMATION

REV.

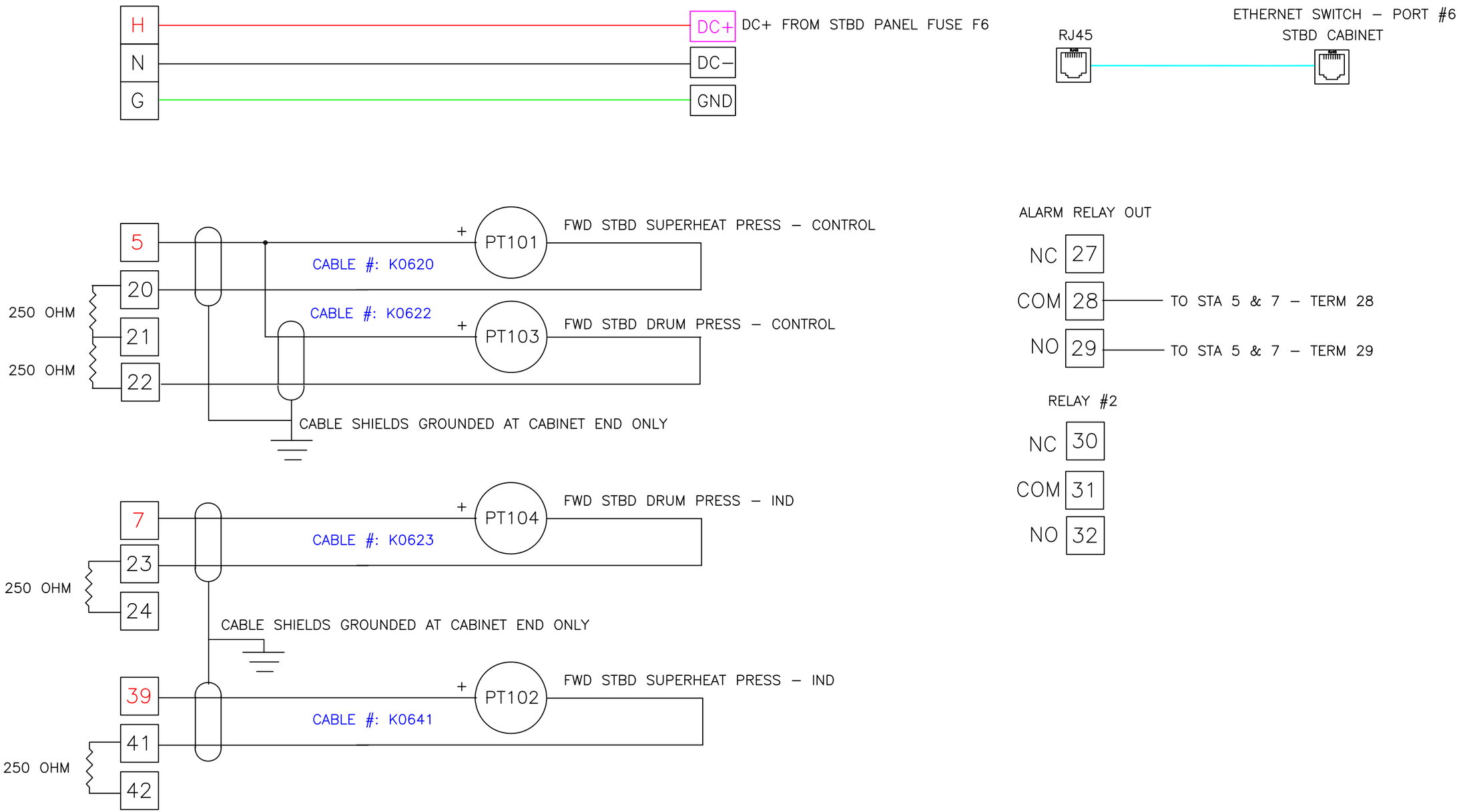

[redacted]

SS BADGER
STATION 6 – FWD STBD MASTER
WIRING DETAILS

©

DRAWING NAME: STA6.DWG		DRAWING NUMBER:
BY: JCHLLC	DATE: 1/29/14	SHEET ___ OF ___

US EPA ARCHIVE DOCUMENT

CONTAINS CONFIDENTIAL BUSINESS INFORMATION

REV.

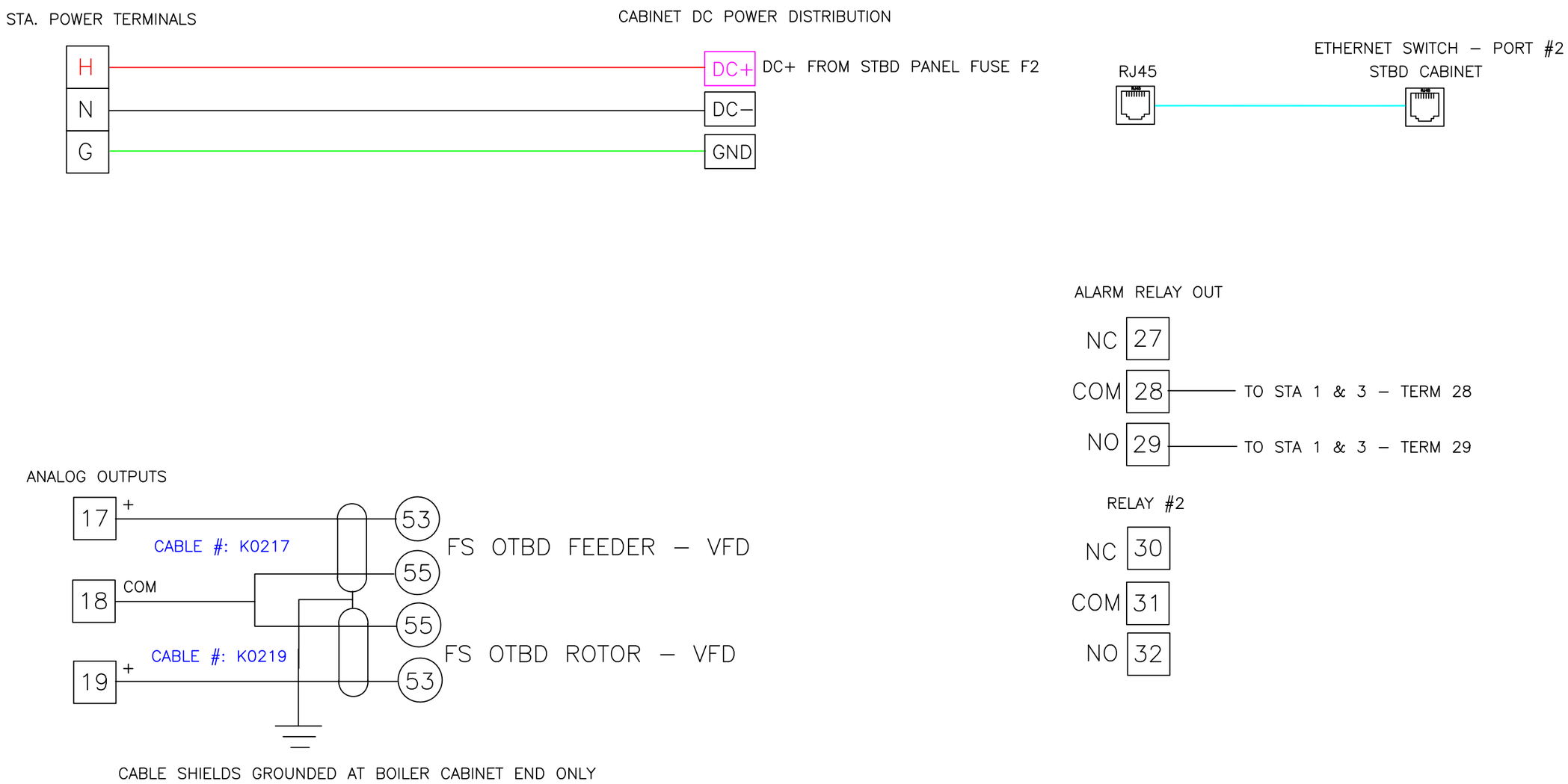

[redacted]

SS BADGER
STATION 2 – FWD STBD OTBD FEEDER
WIRING DETAILS

©

DRAWING NAME: STA2.DWG	DRAWING NUMBER:
BY: JCHLLC DATE: 1/30/14	SHEET ___ OF ___

US EPA ARCHIVE DOCUMENT

US EPA ARCHIVE DOCUMENT

CONTAINS CONFIDENTIAL BUSINESS INFORMATION

REV	DESCRIPTION	DATE	BY
A	CHANGED SUFFIXES, ADDED PLC INPUTS	1/6/14	CR

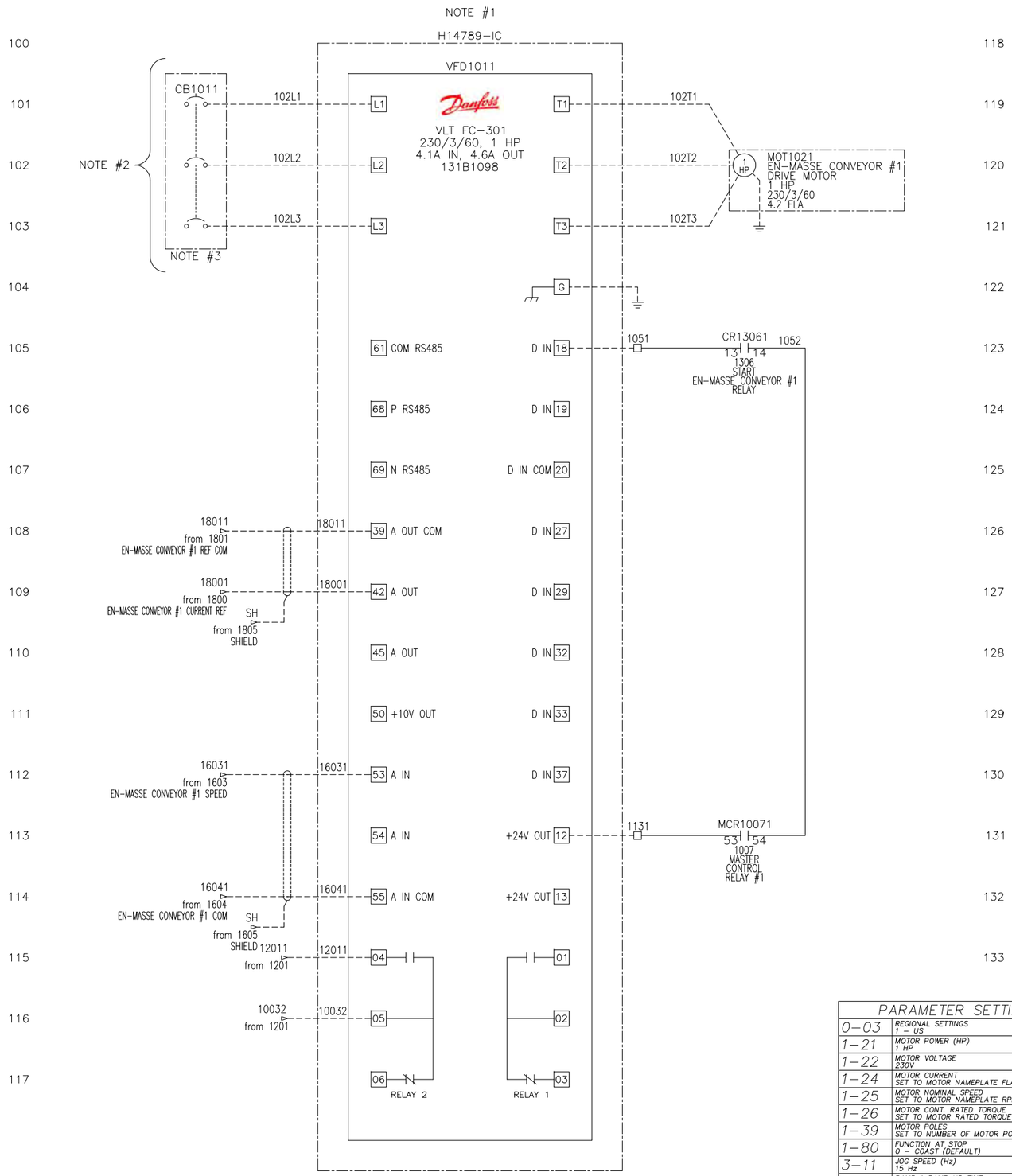

MAIN PANEL, H14789-IA,
BEGINS ON SHEET 9

PARAMETER SETTINGS	
0-03	REGIONAL SETTINGS 1 - US
1-21	MOTOR POWER (HP) 1 HP
1-22	MOTOR VOLTAGE 230V
1-24	MOTOR CURRENT SET TO MOTOR NAMEPLATE FLA
1-25	MOTOR NOMINAL SPEED SET TO MOTOR NAMEPLATE RPM
1-26	MOTOR CONT. RATED TORQUE SET TO MOTOR RATED TORQUE IN Nm
1-39	MOTOR POLES SET TO NUMBER OF MOTOR POLES
1-80	FUNCTION AT STOP 0 - COAST (DEFAULT)
3-11	JOG SPEED (Hz) 15 Hz
3-41	RAMP 1 RAMP UP TIME 5 SEC
3-42	RAMP 1 RAMP DOWN TIME 5 SEC

PARAMETER SETTINGS	
4-12	MOTOR SPEED LOW LIMIT (Hz) 15 Hz
4-19	MAX OUTPUT FREQUENCY 60 Hz
5-10	TERMINAL 18 8 - START
5-12	TERMINAL 27 0 - NO OPERATION
5-41	FUNCTION RELAY, RELAY 2 5 - RUNNING
6-50	TERMINAL 42 OUTPUT 133 - MOTOR CUR. 4-20mA
—	– –
—	– –
—	– –
—	– –
DIP S201	TERMINAL 53 ANALOG INPUT ON - 0/4-20mA

NOTE #1: VFD LOCATED OUTSIDE OF MAIN PANEL, H14789-IA
NOTE #2: VFD POWER FED FROM SOURCE OUTSIDE MAIN PANEL, H15789-IA
NOTE #3: FUSE OR CIRCUIT BREAKER REQUIRED BASED ON VFD MANUFACTURER RECOMMENDED OVER CURRENT PROTECTION

[redacted]

DATE 12/3/14	JOB NO. H14789-IA & IC	DRAWN CR	
SCALE N/A		BOM = 1	DWG = 1

TITLE
MOTOR WIRING DIAGRAM
NEMA 4/12 - UNITRONICS PLC BATCH CONTROL

CUST. LAKE MICHIGAN TRANS-LAKE SHORTCUT, INC.

SHEET	DWG. NO.	REV.
1 OF 23	H14789IA-D00	A

CONTAINS CONFIDENTIAL BUSINESS INFORMATION

REV	DESCRIPTION	DATE	BY
A	CHANGED SUFFIXES, ADDED PLC INPUTS	1/6/14	CR

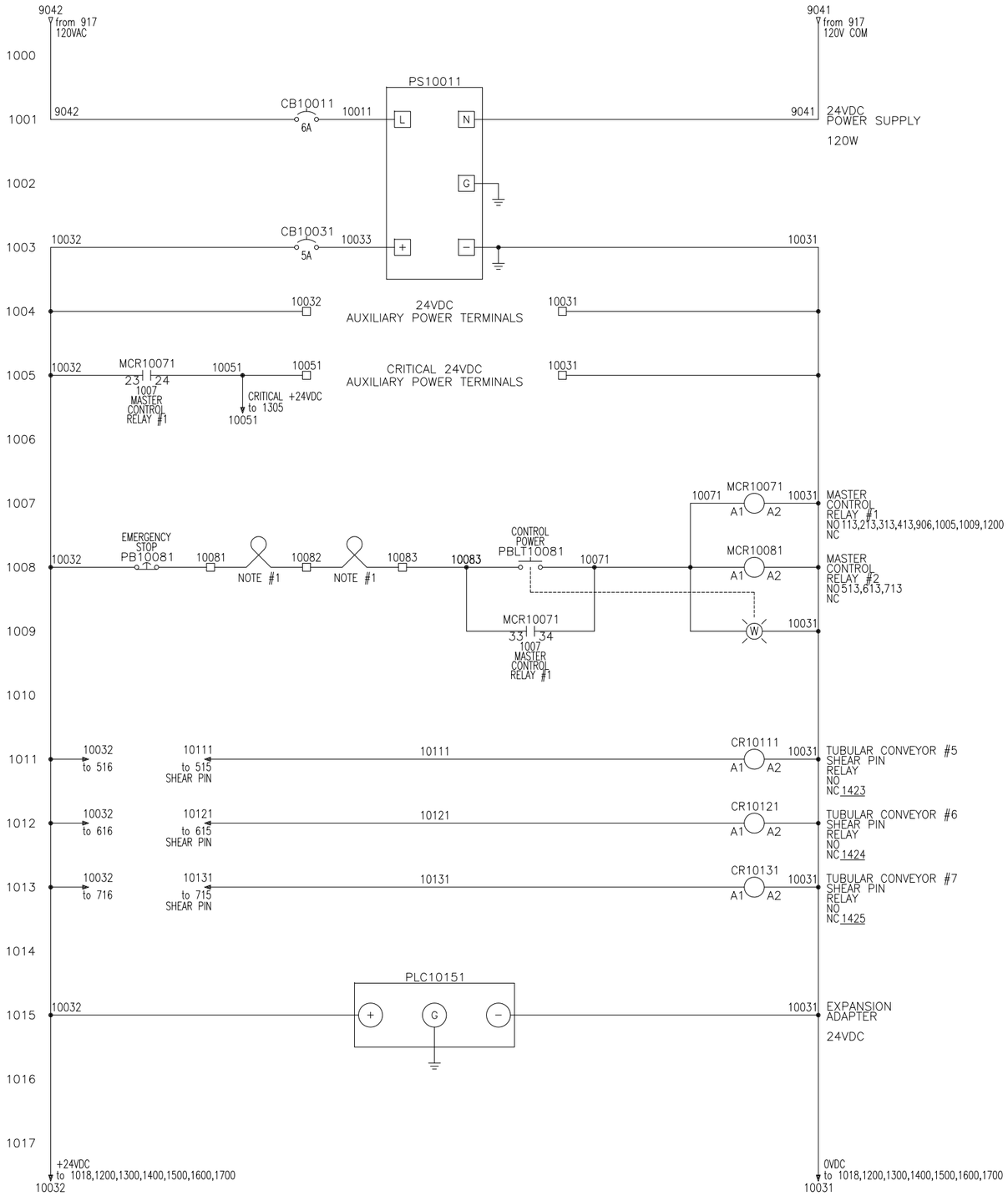

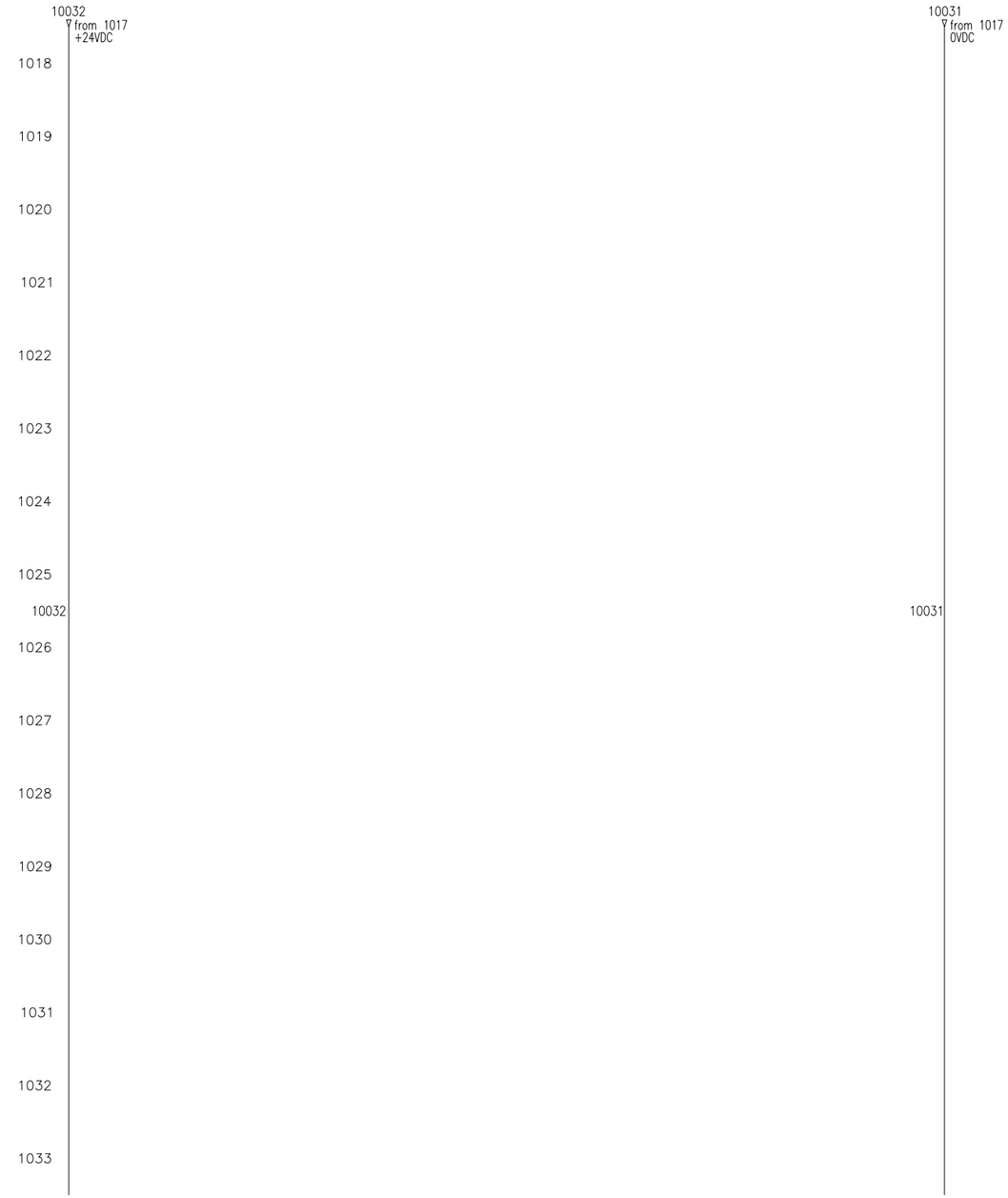

NOTES:
1. REMOVE JUMPER IF CIRCUIT IS UTILIZED

[redacted]

DATE 12/3/14	JOB NO. H14789-IA & IC	DRAWN CR	
SCALE N/A		BOM = 1	DWG = 1

TITLE
24VDC WIRING DIAGRAM
NEMA 4/12 – UNITRONICS PLC BATCH CONTROL

CUST. *LAKE MICHIGAN TRANS–LAKE SHORTCUT, INC.*

SHEET 10 OF 23 | DWG. NO. H14789IA–D00 | REV. A

US EPA ARCHIVE DOCUMENT

CONTAINS CONFIDENTIAL BUSINESS INFORMATION

REV	DESCRIPTION	DATE	BY
A	CHANGED SUFFIXES, ADDED PLC INPUTS	1/6/14	CR

1100
1101
1102
1103
1104
1105
1106
1107
1108
1109
1110
1111
1112
1113
1114
1115
1116
1117
1118
1119
1120
1121
1122
1123
1124
1125
1126
1127
1128
1129
1130
1131
1132
1133

[redacted]

DATE 12/3/14	JOB NO. H14789-IA & IC	DRAWN CR	
SCALE N/A		BOM = 1	DWG = 1

TITLE

RESERVED

NEMA 4/12 – UNITRONICS PLC BATCH CONTROL

CUST. LAKE MICHIGAN TRANS-LAKE SHORTCUT, INC.

SHEET 11 OF 23	DWG. NO. H14789IA-D00	REV. A

US EPA ARCHIVE DOCUMENT

REV	DESCRIPTION	DATE	BY
A	CHANGED SUFFIXES, ADDED PLC INPUTS	1/6/14	CR

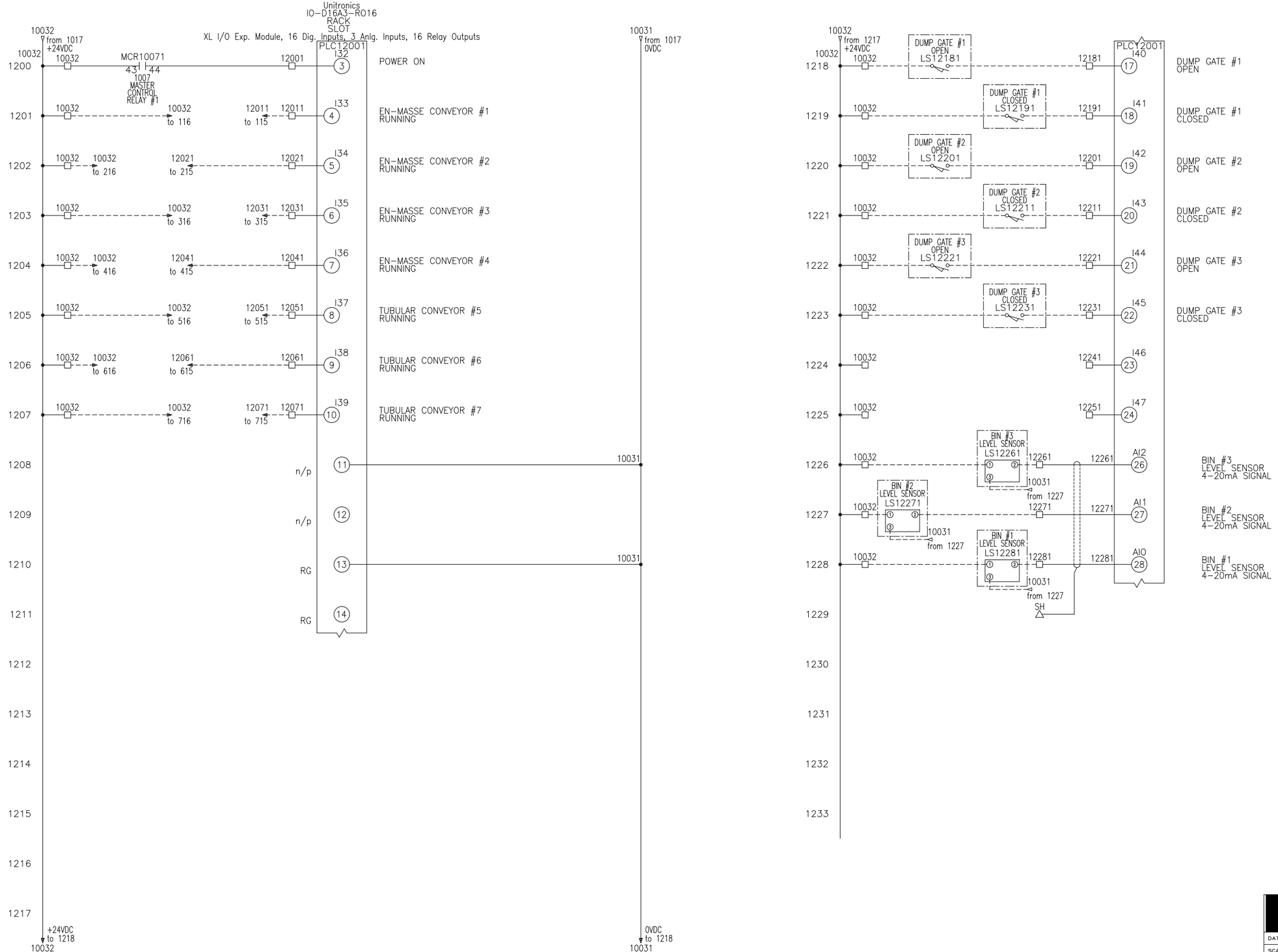

[redacted]

DATE 12/3/14	JOB NO. H14789-IA & IC	DRAWN CR	
SCALE N/A		BOM = 1	DWG = 1

TITLE

PLC WIRING DIAGRAM

NEMA 4/12 – UNITRONICS PLC BATCH CONTROL

CUST. LAKE MICHIGAN TRANS-LAKE SHORTCUT, INC.

SHEET 12 OF 23 | DWG. NO. H14789IA-D00 | REV. A

CONTAINS CONFIDENTIAL BUSINESS INFORMATION

REV	DESCRIPTION	DATE	BY
A	CHANGED SUFFIXES, ADDED PLC INPUTS	1/6/14	CR

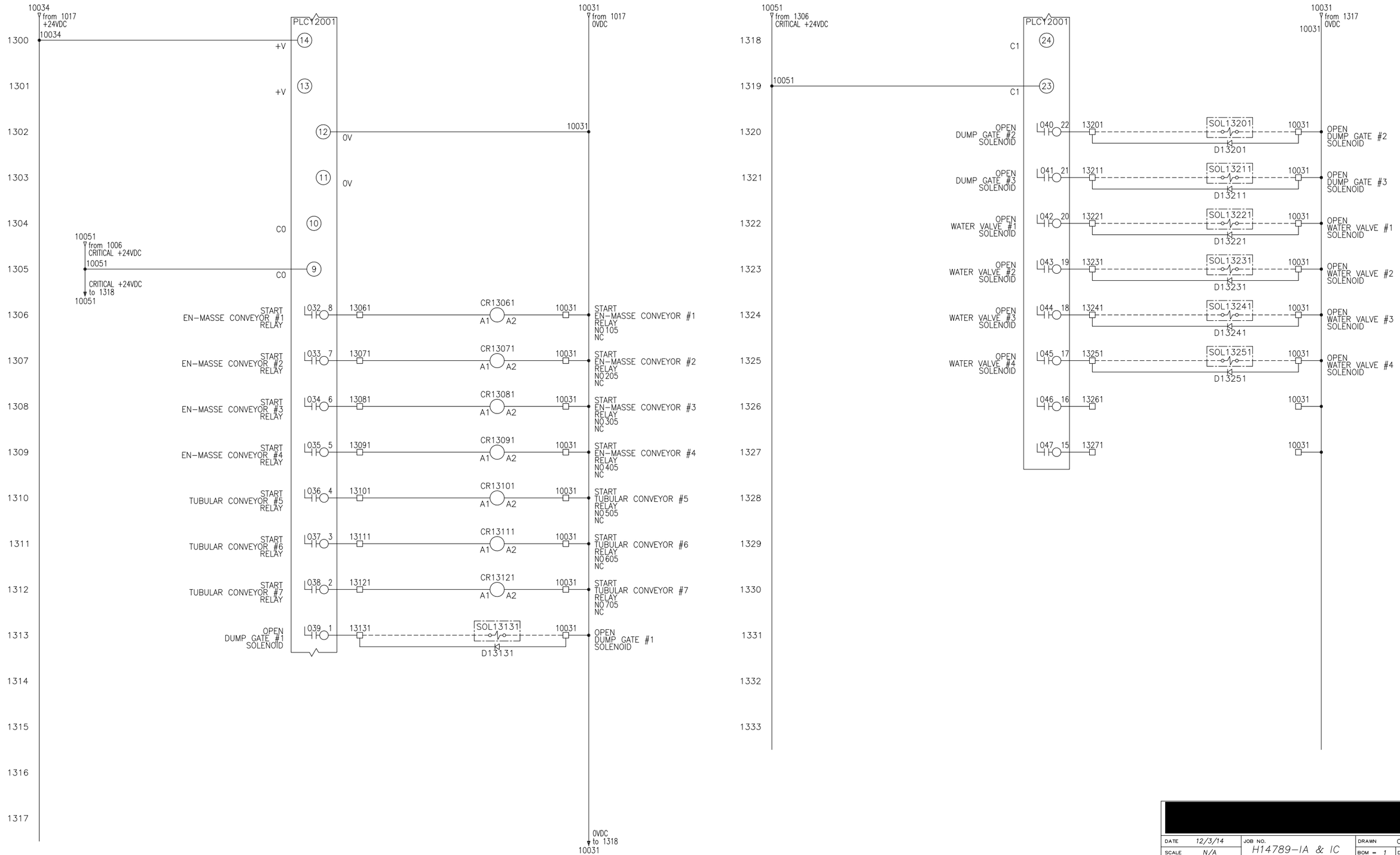

[redacted]

DATE 12/3/14	JOB NO. H14789-IA & IC	DRAWN CR	
SCALE N/A		BOM = 1	DWG = 1

TITLE

PLC WIRING DIAGRAM

NEMA 4/12 – UNITRONICS PLC BATCH CONTROL

CUST. LAKE MICHIGAN TRANS-LAKE SHORTCUT, INC.

SHEET 13 OF 23 | DWG. NO. H14789IA-D00 | REV. A

CONTAINS CONFIDENTIAL BUSINESS INFORMATION

REV	DESCRIPTION	DATE	BY
A	CHANGED SUFFIXES, ADDED PLC INPUTS	1/6/14	CR

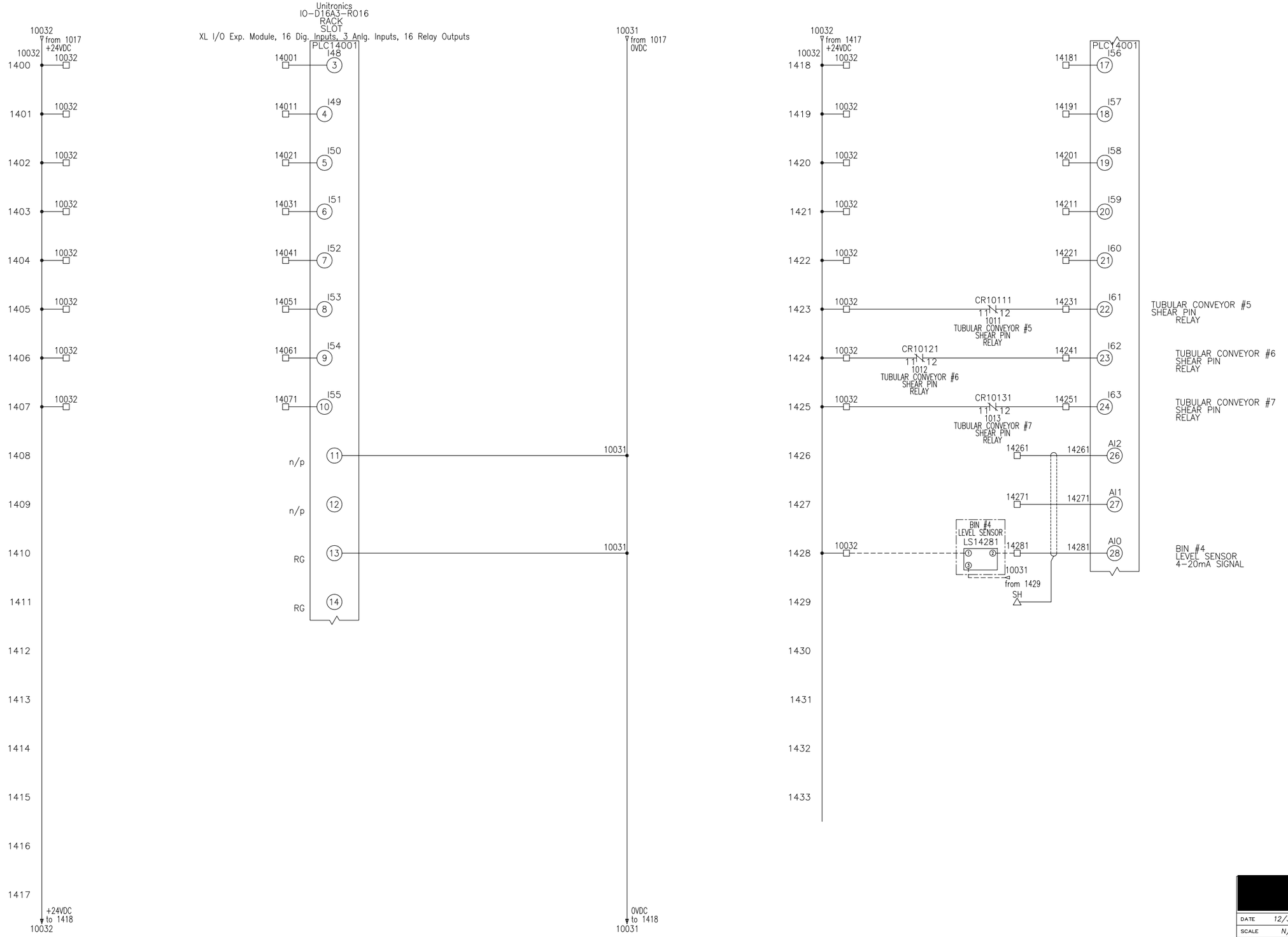

CONTAINS CONFIDENTIAL BUSINESS INFORMATION

[redacted]

DATE 12/3/14	JOB NO. H14789-IA & IC	DRAWN CR	
SCALE N/A		BOM = 1	DWG = 1

TITLE

PLC WIRING DIAGRAM

NEMA 4/12 – UNITRONICS PLC BATCH CONTROL

CUST. LAKE MICHIGAN TRANS-LAKE SHORTCUT, INC.

SHEET 14 OF 23	DWG. NO. H14789IA-D00	REV. A

REV	DESCRIPTION	DATE	BY
A	CHANGED SUFFIXES, ADDED PLC INPUTS	1/6/14	CR

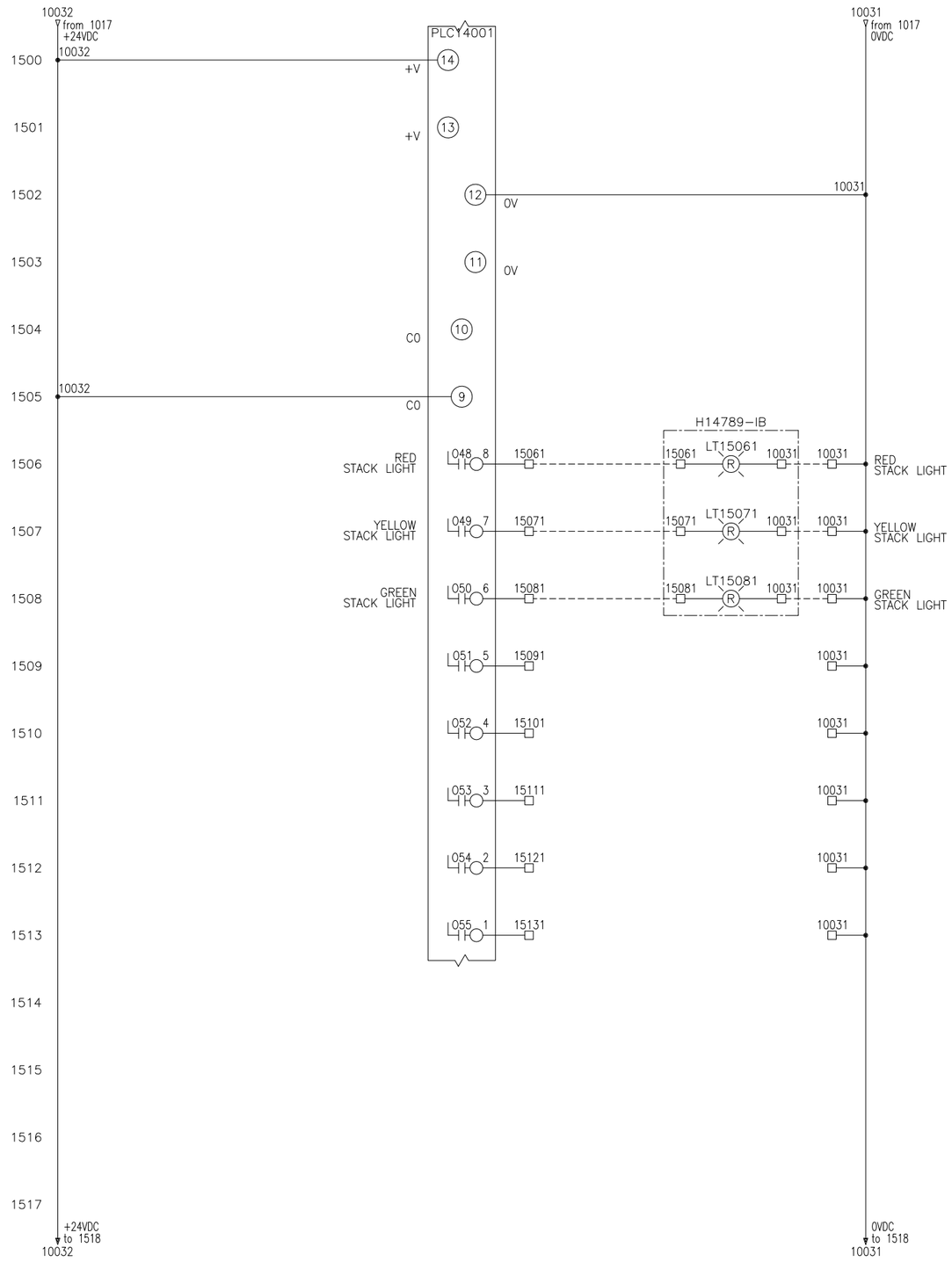

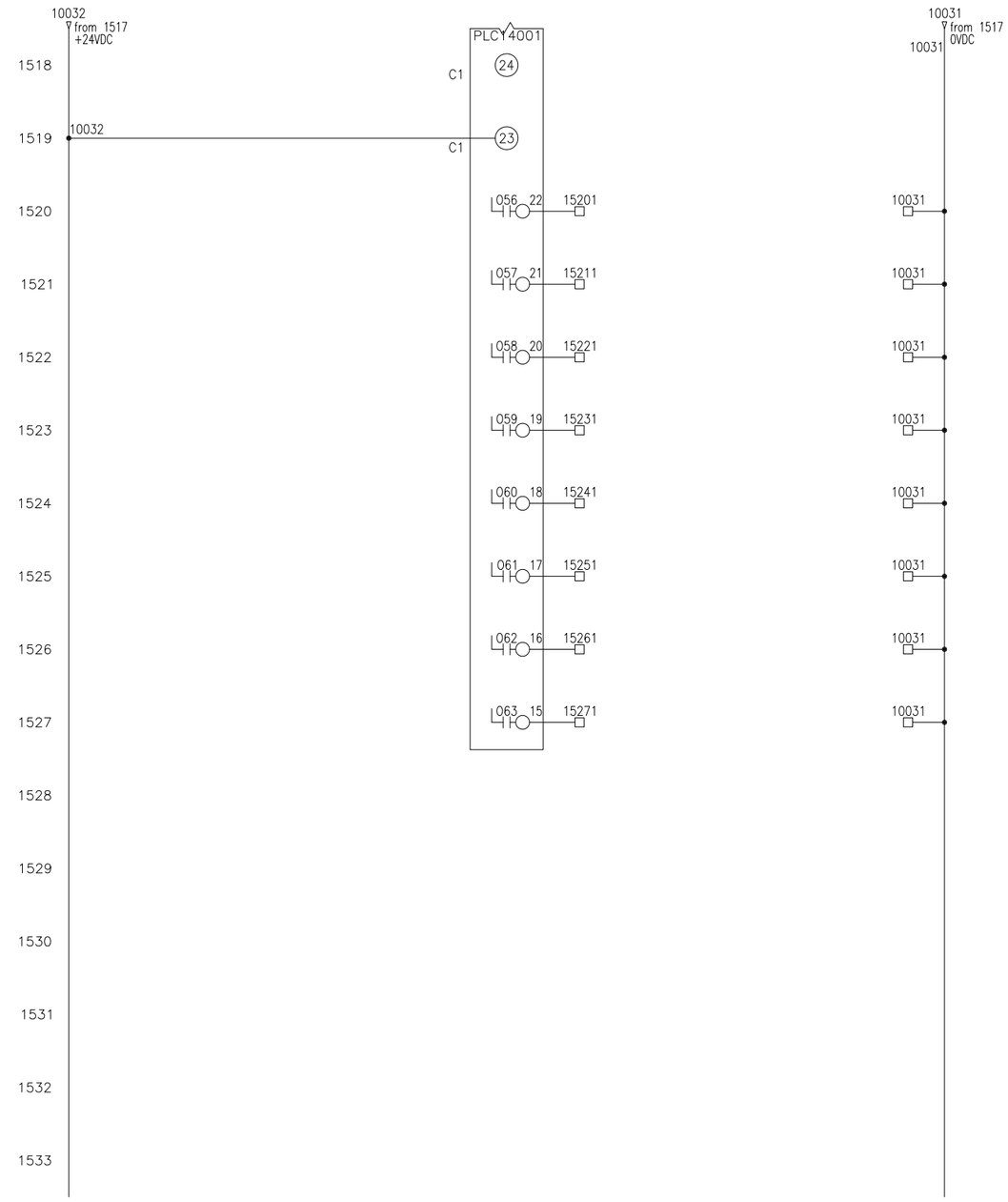

CONTAINS CONFIDENTIAL BUSINESS INFORMATION

[redacted]

DATE 12/3/14	JOB NO. H14789-IA & IC	DRAWN CR	
SCALE N/A		BOM = 1	DWG = 1

TITLE

PLC WIRING DIAGRAM

NEMA 4/12 – UNITRONICS PLC BATCH CONTROL

CUST. LAKE MICHIGAN TRANS-LAKE SHORTCUT, INC.

SHEET 15 OF 23 | DWG. NO. H14789IA-D00 | REV. A

REV	DESCRIPTION	DATE	BY
A	CHANGED SUFFIXES, ADDED PLC INPUTS	1/6/14	CR

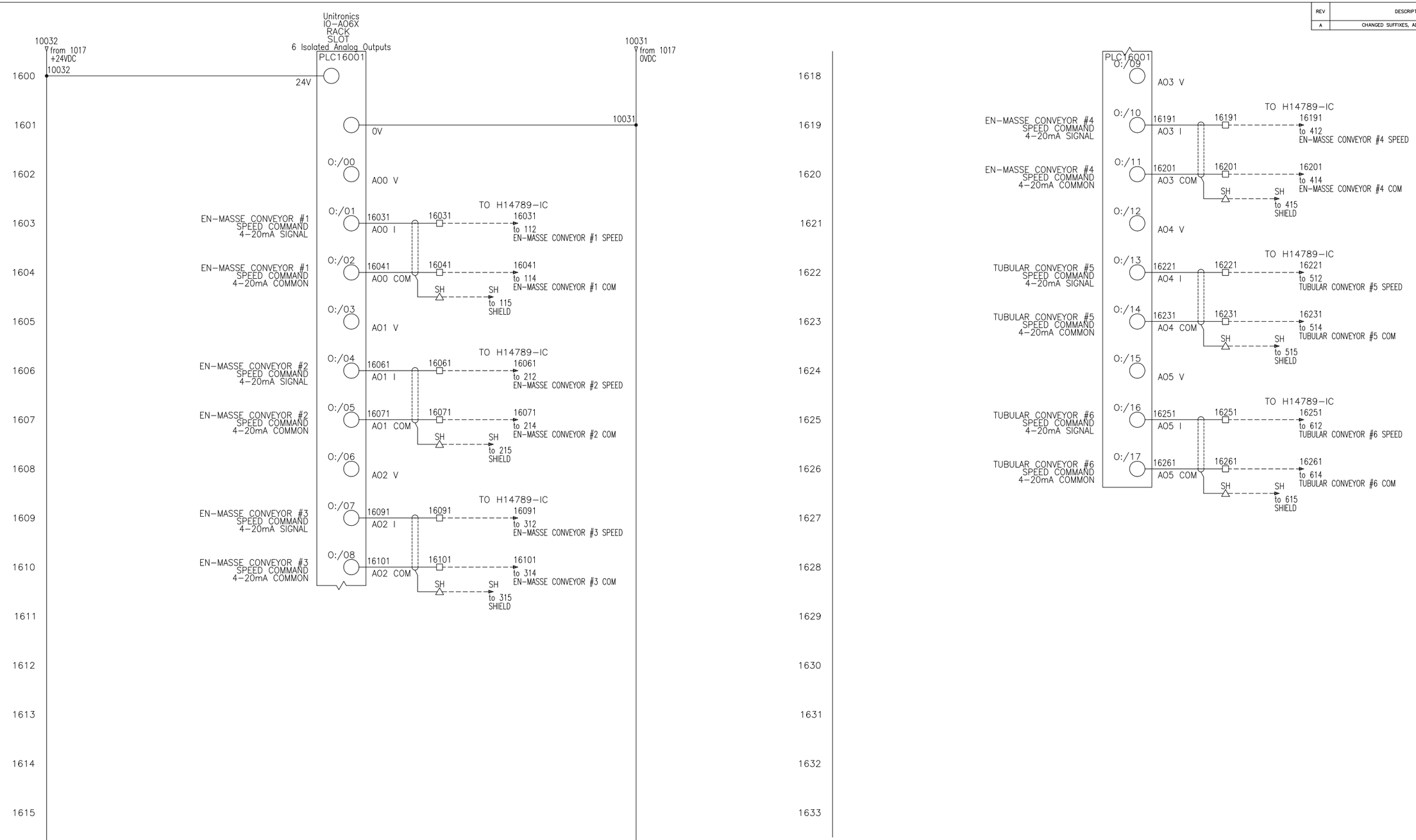

[redacted]

DATE 12/3/14	JOB NO. H14789-IA & IC	DRAWN CR	
SCALE N/A		BOM = 1	DWG = 1

TITLE

PLC WIRING DIAGRAM

NEMA 4/12 – UNITRONICS PLC BATCH CONTROL

CUST. LAKE MICHIGAN TRANS-LAKE SHORTCUT, INC.

SHEET 16 OF 23 | DWG. NO. H14789IA-D00 | REV. A

CONTAINS CONFIDENTIAL BUSINESS INFORMATION

REV	DESCRIPTION	DATE	BY
A	CHANGED SUFFIXES, ADDED PLC INPUTS	1/6/14	CR

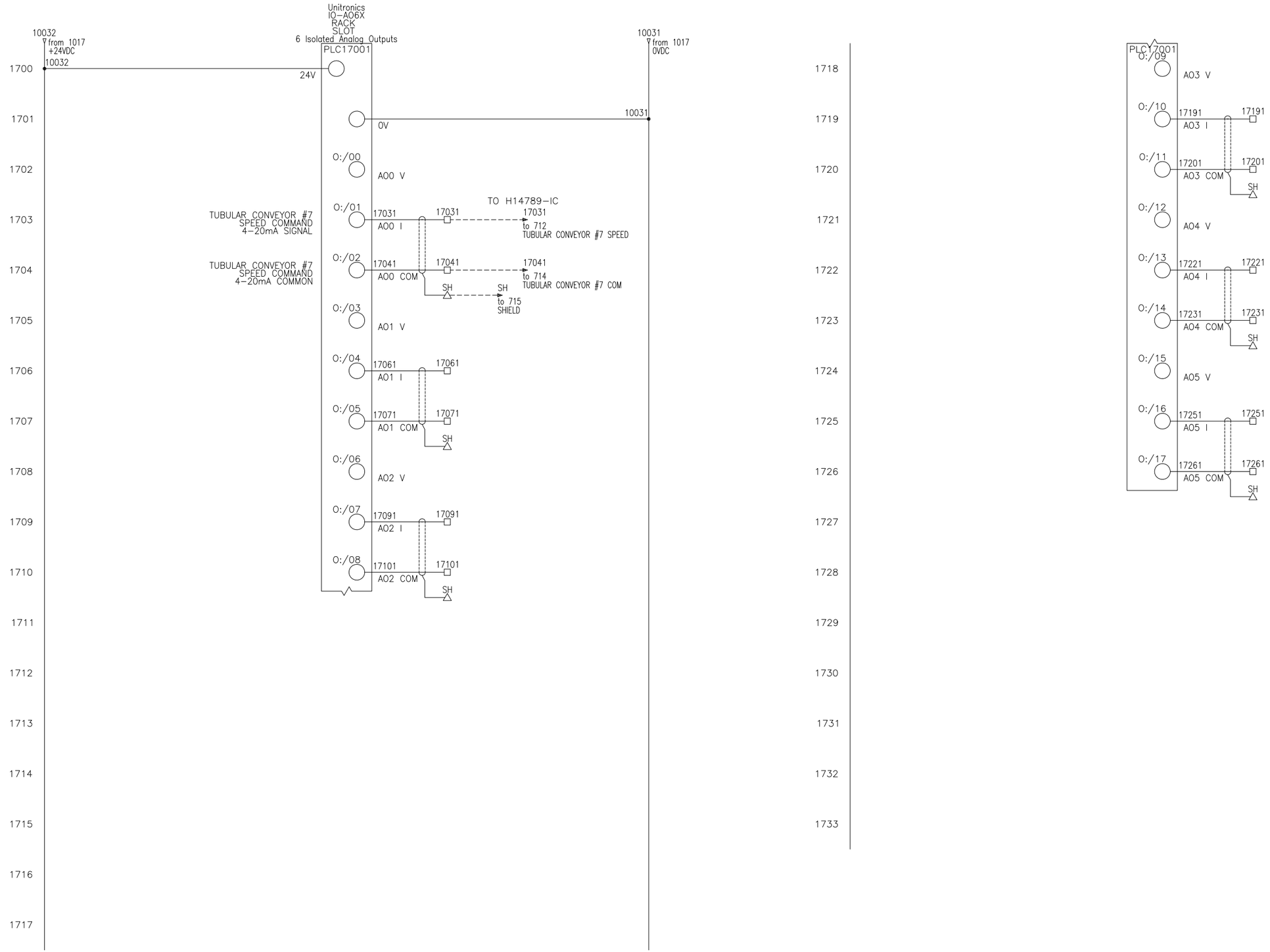

[redacted]

DATE 12/3/14	JOB NO. H14789-IA & IC	DRAWN CR	
SCALE N/A		BOM = 1	DWG = 1

TITLE

PLC WIRING DIAGRAM

NEMA 4/12 – UNITRONICS PLC BATCH CONTROL

CUST. LAKE MICHIGAN TRANS-LAKE SHORTCUT, INC.

SHEET 17 OF 23	DWG. NO. H14789IA-D00	REV. A

CONTAINS CONFIDENTIAL BUSINESS INFORMATION

REV	DESCRIPTION	DATE	BY
A	CHANGED SUFFIXES, ADDED PLC INPUTS	1/6/14	CR

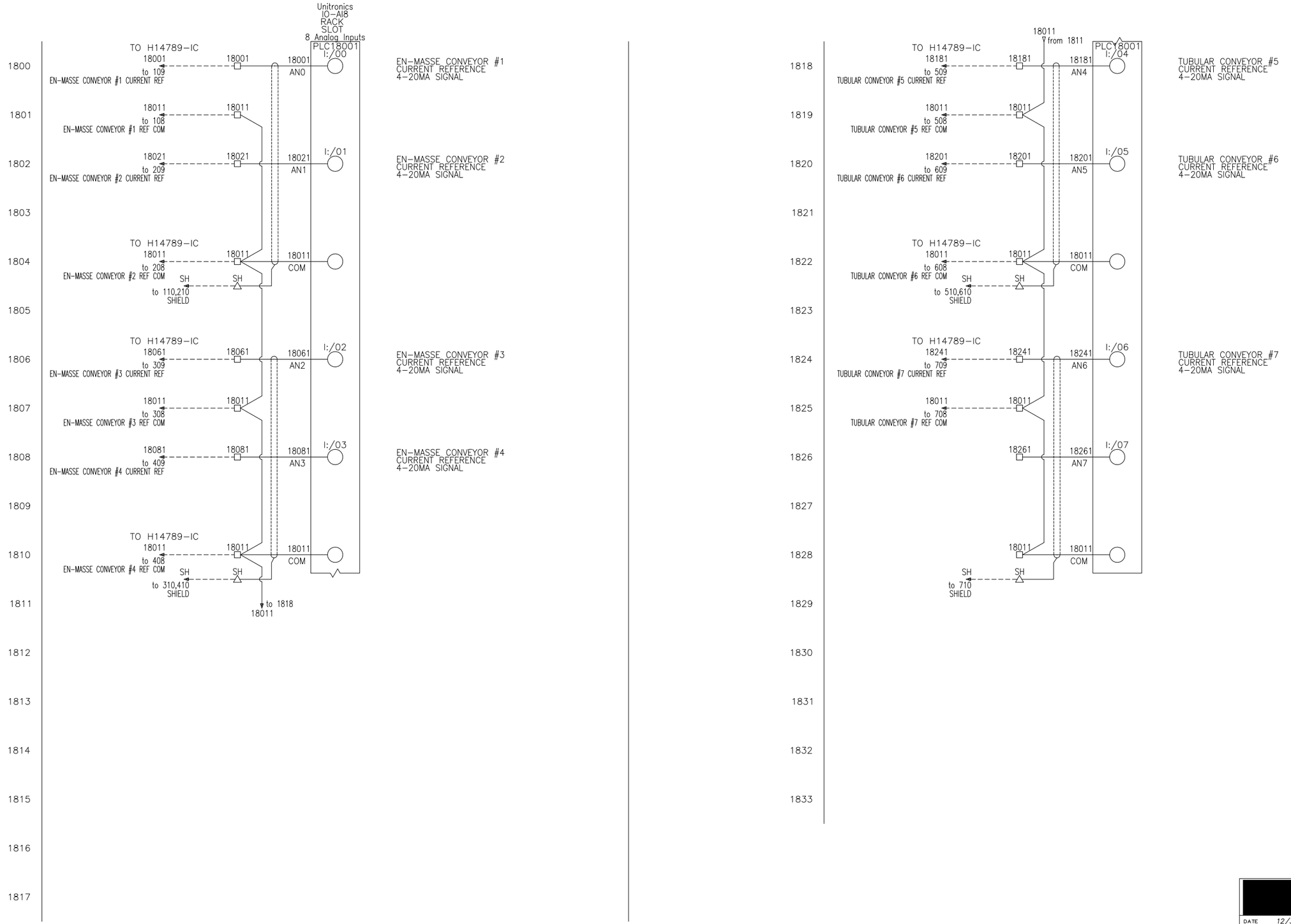

[redacted]

DATE 12/3/14	JOB NO. H14789-IA & IC	DRAWN CR	
SCALE N/A		BOM = 1	DWG = 1

TITLE

PLC WIRING DIAGRAM

NEMA 4/12 – UNITRONICS PLC BATCH CONTROL

CUST. LAKE MICHIGAN TRANS-LAKE SHORTCUT, INC.

SHEET	DWG. NO.	REV.
18 OF 23	H14789IA-D00	A

CONTAINS CONFIDENTIAL BUSINESS INFORMATION

CONTAINS CONFIDENTIAL BUSINESS INFORMATION

REV	DESCRIPTION	DATE	BY
A	CHANGED SUFFIXES, ADDED PLC INPUTS	1/6/14	CR

1900
1901
1902
1903
1904
1905
1906
1907
1908
1909
1910
1911
1912
1913
1914
1915
1916
1917
1918
1919
1920
1921
1922
1923
1924
1925
1926
1927
1928
1929
1930
1931
1932
1933

[redacted]

DATE 12/3/14	JOB NO. H14789-IA & IC	DRAWN CR	
SCALE N/A		BOM = 1	DWG = 1

TITLE

RESERVED

NEMA 4/12 – UNITRONICS PLC BATCH CONTROL

CUST. LAKE MICHIGAN TRANS-LAKE SHORTCUT, INC.

SHEET 19 OF 23	DWG. NO. H14789IA-D00	REV. A

US EPA ARCHIVE DOCUMENT

CONTAINS CONFIDENTIAL BUSINESS INFORMATION

REV	DESCRIPTION	DATE	BY
A	CHANGED SUFFIXES, ADDED PLC INPUTS	1/6/14	CR

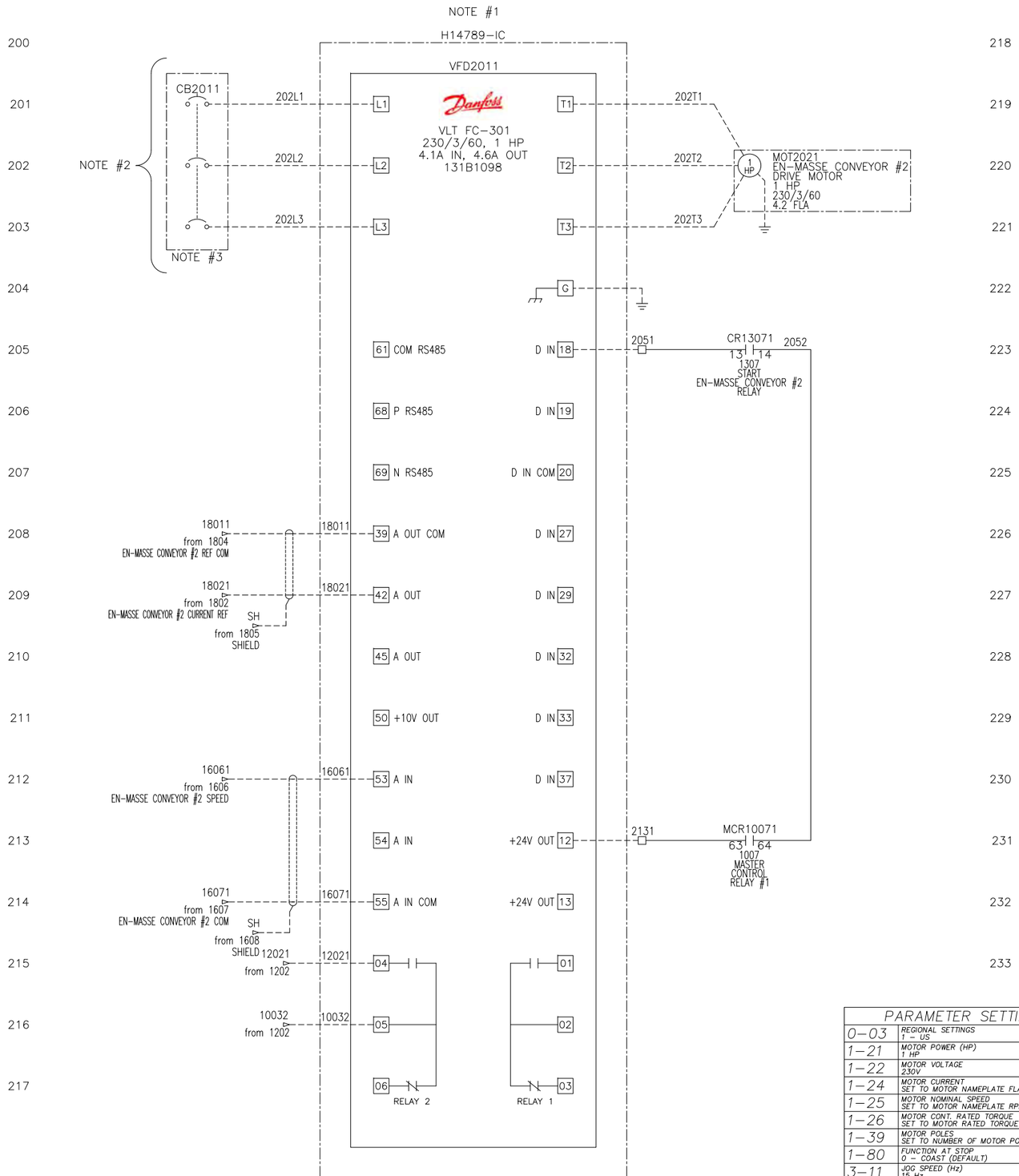

PARAMETER SETTINGS	
0–03	REGIONAL SETTINGS 1 – US
1–21	MOTOR POWER (HP) 1 HP
1–22	MOTOR VOLTAGE 230V
1–24	MOTOR CURRENT SET TO MOTOR NAMEPLATE FLA
1–25	MOTOR NOMINAL SPEED SET TO MOTOR NAMEPLATE RPM
1–26	MOTOR CONT. RATED TORQUE SET TO MOTOR RATED TORQUE IN Nm
1–39	MOTOR POLES SET TO NUMBER OF MOTOR POLES
1–80	FUNCTION AT STOP 0 – COAST (DEFAULT)
3–11	JOG SPEED (Hz) 15 Hz
3–41	RAMP 1 RAMP UP TIME 5 SEC
3–42	RAMP 1 RAMP DOWN TIME 5 SEC

PARAMETER SETTINGS	
4–12	MOTOR SPEED LOW LIMIT (Hz) 15 Hz
4–19	MAX OUTPUT FREQUENCY 60 Hz
5–10	TERMINAL 18 8 – START
5–12	TERMINAL 27 0 – NO OPERATION
5–41	FUNCTION RELAY, RELAY 2 5 – RUNNING
6–50	TERMINAL 42 OUTPUT 133 – MOTOR CUR. 4–20mA
—	– –
—	– –
—	– –
—	– –
DIP S201	TERMINAL 53 ANALOG INPUT ON – 0/4–20mA

NOTE #1: VFD LOCATED OUTSIDE OF MAIN PANEL, H14789–IA
NOTE #2: VFD POWER FED FROM SOURCE OUTSIDE MAIN PANEL, H15789–IA
NOTE #3: FUSE OR CIRCUIT BREAKER REQUIRED BASED ON VFD MANUFACTURER RECOMMENDED OVER CURRENT PROTECTION

[redacted]

DATE 12/3/14	JOB NO. H14789–IA & IC	DRAWN CR	
SCALE N/A		BOM = 1	DWG = 1

TITLE
MOTOR WIRING DIAGRAM
NEMA 4/12 – UNITRONICS PLC BATCH CONTROL

CUST. LAKE MICHIGAN TRANS–LAKE SHORTCUT, INC.

SHEET	DWG. NO.	REV.
2 OF 23	H14789IA–D00	A

US EPA ARCHIVE DOCUMENT

CONTAINS CONFIDENTIAL BUSINESS INFORMATION

REV	DESCRIPTION	DATE	BY
A	CHANGED SUFFIXES, ADDED PLC INPUTS	1/6/14	CR

2000
2001
2002
2003
2004
2005
2006
2007
2008
2009
2010
2011
2012
2013
2014
2015
2016
2017
2018
2019
2020
2021
2022
2023
2024
2025
2026
2027
2028
2029
2030
2031
2032
2033

[redacted]

DATE 12/3/14	JOB NO. H14789-IA & IC	DRAWN CR	
SCALE N/A		BOM = 1	DWG = 1

TITLE

RESERVED

NEMA 4/12 – UNITRONICS PLC BATCH CONTROL

CUST. LAKE MICHIGAN TRANS-LAKE SHORTCUT, INC.

SHEET 20 OF 23	DWG. NO. H14789IA-D00	REV. A

US EPA ARCHIVE DOCUMENT

REV	DESCRIPTION	DATE	BY
A	CHANGED SUFFIXES, ADDED PLC INPUTS	1/6/14	CR

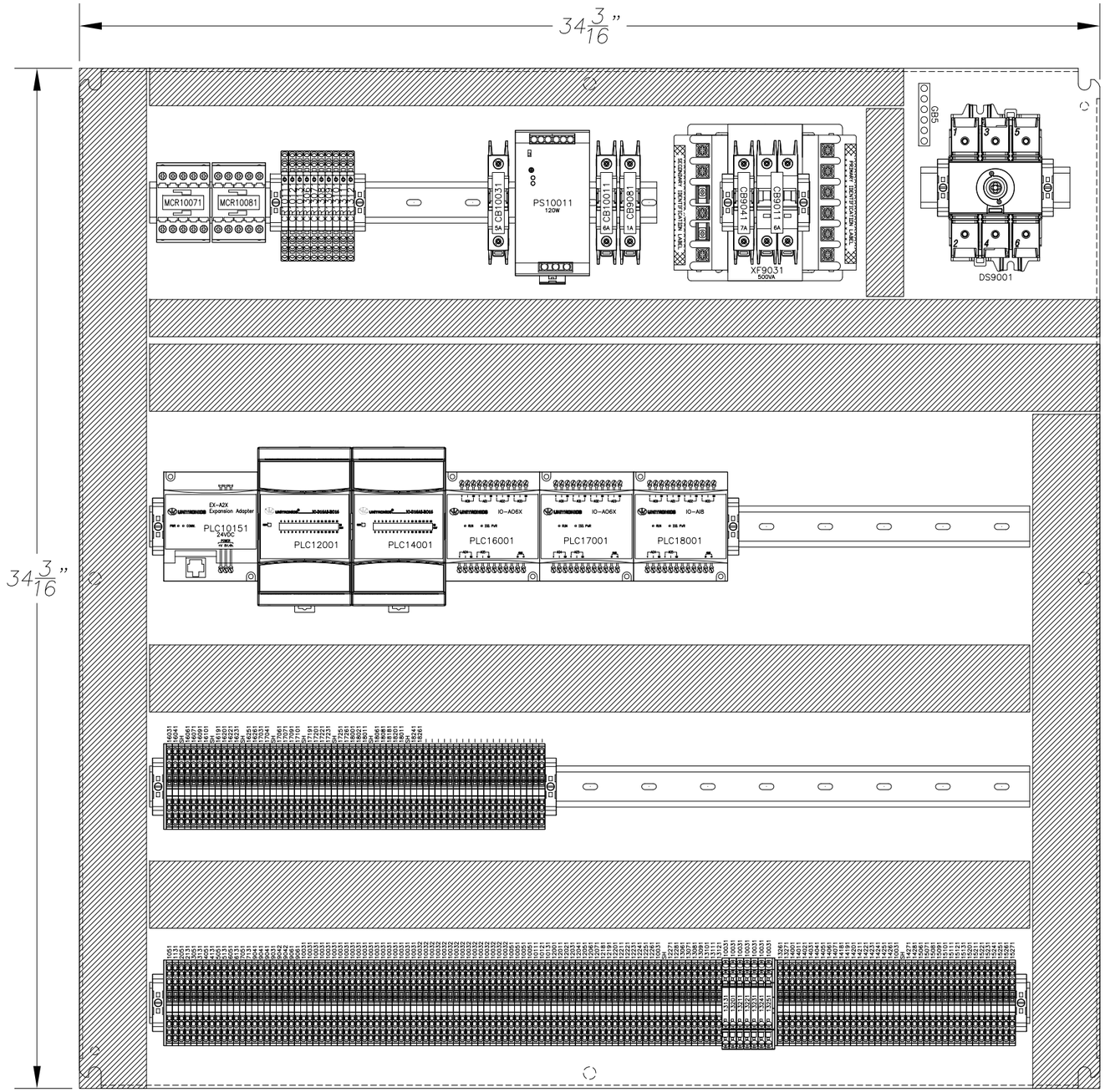

VOLTAGE:	230 VOLT
PHASE & FREQ.:	3PH., 60HZ
FULL LOAD CURRENT:	2 AMP
S.C.C.R.:	100k AMP
ENCLOSURE RATING:	TYPE 4
SCHEMATIC:	H14789IA–D00
MFG. BY:	JP Motors and Drives

[redacted]

DATE 12/3/14	JOB NO. H14789–IA & IC	DRAWN CR	
SCALE N/A		BOM = 1	DWG = 1

TITLE

PANEL LAYOUT

NEMA 4/12 – UNITRONICS PLC BATCH CONTROL

CUST. LAKE MICHIGAN TRANS–LAKE SHORTCUT, INC.

SHEET 21 OF 23	DWG. NO. H14789IA–D00	REV. A

CONTAINS CONFIDENTIAL BUSINESS INFORMATION

US EPA ARCHIVE DOCUMENT

CONTAINS CONFIDENTIAL BUSINESS INFORMATION

REV	DESCRIPTION	DATE	BY
A	CHANGED SUFFIXES, ADDED PLC INPUTS	1/6/14	CR

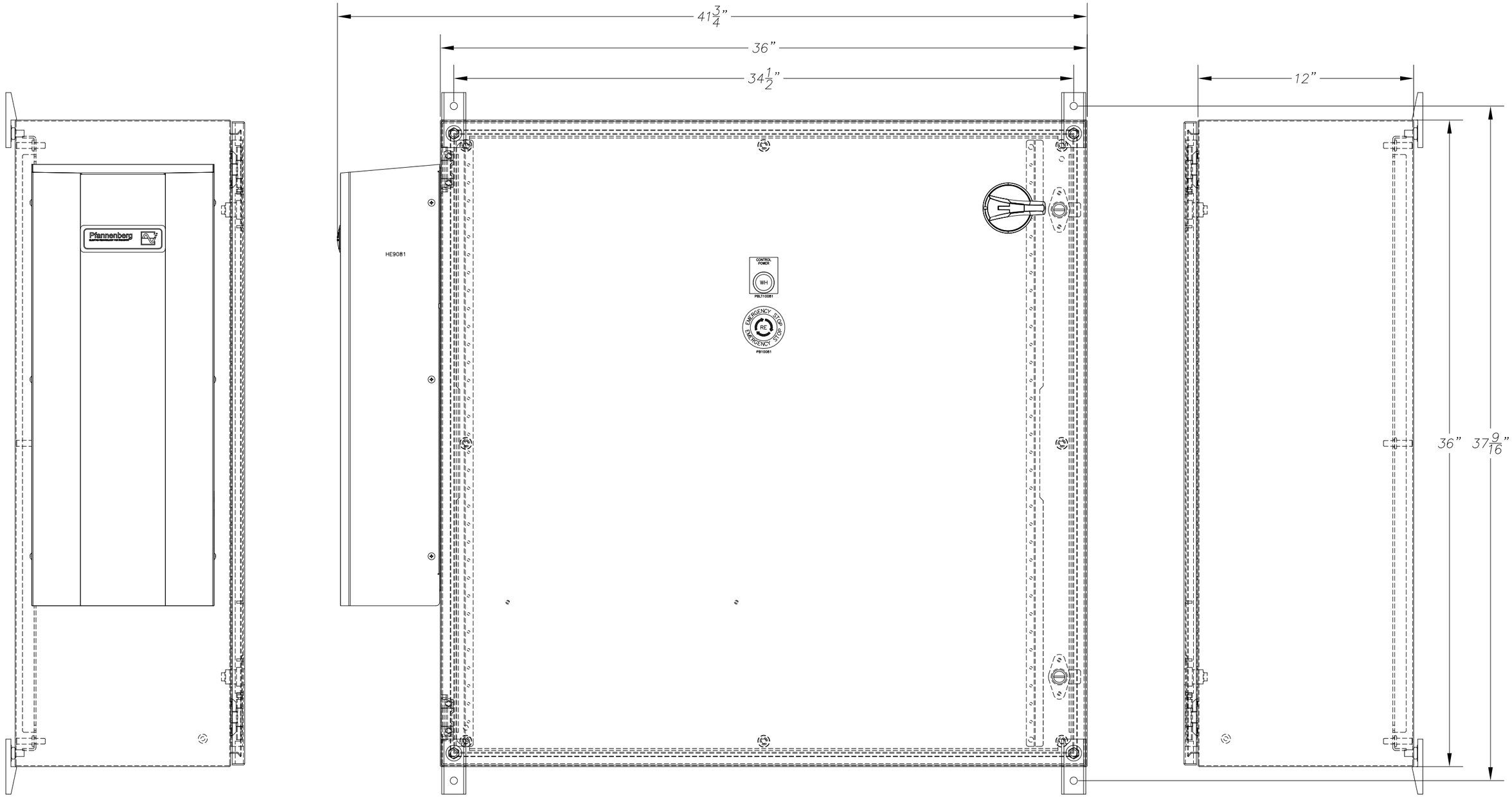

[redacted]

DATE 12/3/14	JOB NO. H14789-IA & IC	DRAWN CR	
SCALE N/A		BOM = 1	DWG = 1

TITLE

ENCLOSURE LAYOUT

NEMA 4/12 – UNITRONICS PLC BATCH CONTROL

CUST. LAKE MICHIGAN TRANS-LAKE SHORTCUT, INC.

SHEET 22 OF 23	DWG. NO. H14789IA-D00	REV. A

REV	DESCRIPTION	DATE	BY
A	CHANGED SUFFIXES, ADDED PLC INPUTS	1/6/14	CR

ITEM	QTY	PART #	MANUFACTURE	DESCRIPTION	DESCRIPTOR
1	1	CSD363612	HOFFMAN	36"x36"x12" NEMA 4/12 ENCLOSURE	.
2	1	CP3636G	HOFFMAN	GALVANIZED SUB PAN	.
3	1	CMFK	HOFFMAN	FOOT KIT	.
4	4	131B1098	DANFOSS	4.6A 230V 1 HP FC-301 VFD (SHIPPED LOOSE)	VFD1011-4011
5	3	131H4553	DANFOSS	30.8A 230V 10 HP FC-301 VFD (SHIPPED LOOSE)	VFD5011-7011
6	1	R9C3030U	EATON	30A UL98 ROTARY DISCONNECT	DS9001
7	1	SF320SH5X5	EATON	320mm, 5x5mm SELECTOR HANDLE DISCONNECT SHAFT	DS9001
8	1	SHB0N4X	EATON	DISCONNECT SELECTOR HANDLE, SIZE 0	DS9001
9	1	FAZ-C6/2-NA	EATON	2 POLE 6A UL489 CIRCUIT BREAKER, C-CURVE	CB9011
10	1	B500MBT13XKF	MICRON	500VA CPT	XF9031
11	1	TPTC-1002	MICRON	6 TERM. FINGERSAFE COVERS	XF9031
12	1	FAZ-C7/1-NA-SP	EATON	1 POLE 7A UL489 CIRCUIT BREAKER, C-CURVE	CB9041
13	1	FAZ-C1/1-NA-SP	EATON	1 POLE 1A UL489 CIRCUIT BREAKER, C-CURVE	CB9081
14	1	12358110045	PFANNENBERG	PWS 3082 120VAC 850W COOLING CAPACITY AIR/WATER HEAT EXCHANGER	HE9081
15	1	FAZ-C6/1-NA-SP	EATON	1 POLE 6A UL489 CIRCUIT BREAKER, C-CURVE	CB10011
16	1	MD120-24A-1C	MICRON	24VDC 120W POWER SUPPLY	PS10011
17	1	FAZ-C5/1-NA-SP	EATON	1 POLE 5A UL489 CIRCUIT BREAKER, C-CURVE	CB10031
18	2	XTRE10B40TD	EATON	24VDC 4 N.O. RELAY, B FRAME	MCR10071,10081
19	2	XTCEXFAC40	EATON	4 N.O. FRONT MOUNT AUXILIARY CONTACT	MCR10071,10081
20	1	M22-PVT-K02	EATON	22mm RED EMERGENCY STOP PB W/ 2 N.C. CONTACTS	PB10081
21	1	CT-22ESTOP	CT	22mm LEGEND - EMERGENCY STOP	PB10081
22	1	M22-DL-W-K10-W	EATON	22mm 12-30VAC/DC WHITE ILLUM. FLUSH HEAD PB W/ 1 N.O. CONTACT	PBLT10081
23	1	CT-22CONTROL/POWER	CT	22mm LEGEND - CONTROL POWER	PBLT10081
24	10	38.61.0.024.0060	FINDER	24VDC SPDT TERMINAL RELAY	CR10111-13121
25	1	093.01	FINDER	SEPARATOR PLATE	CR10111-13121
26	1	EXL-CAB295	UNITRONICS	2.95M EXPANSION CABLE	.
27	1	EX-A2X	UNITRONICS	EXPANSION ADAPTER MODULE	PLC10151
28	2	IO-D16A3-RO16	UNITRONICS	16 DIGITAL IN, 16 RELAY OUT EXPANSION	PLC12001,14001
29	2	IO-AO6X	UNITRONICS	6 CHANNEL ANALOG OUTPUT CARD	PLC16001,17001
30	1	IO-AI8	UNITRONICS	8 CHANNEL ANALOG INPUT CARD	PLC18001
31	7	1492-LD4DR	AB	DOUBLE STACK REVERSE BIAS DIODE SPRING TERMINAL	D13131-13251
32	1	1492-EBLD4	AB	END PLATE FOR DOUBLE STACK DIODE SPRING TERMINAL	.
33	185	XBPT25D22	EATON	5.2mm 4-WIRE SPRING CAGE TERMINAL	.
34	10	XBPT25D22PE	EATON	5.2mm 4-WIRE SPRING CAGE GROUND TERMINAL	.
35	3	XBACPT25D22	EATON	END PLATE FOR 5.2mm 4-WIRE SPRING CAGE TERMINAL	.
36	12	XBAES35C	EATON	SCREW ON END STOP	.
37	12'	F2X4LG6	PANDUIT	2"x4" LIGHT GRAY WIREWAY	.
38	12'	C2LG6	PANDUIT	2" LIGHT GRAY WIREWAY COVER	.
39	5.5'	F1X4LG6	PANDUIT	1"x4" LIGHT GRAY WIREWAY	.
40	5.5'	C1LG6	PANDUIT	1" LIGHT GRAY WIREWAY COVER	.
41	7'	0801733	PHOENIX	35mm DIN RAIL	.
42	1	GB5	ITE	5 POINT GROUND BAR	GB5
43					
44					
45					
46					
47					
48					
49					
50					
51					
52					
53					
54					
55					
56					

ITEM	QTY	PART #	MANUFACTURE	DESCRIPTION	DESCRIPTOR
57					
58					
59					
60					
61					
62					
63					
64					
65					
66					
67					
68					
69					
70					
71					
72					
73					
74					
75					
76					
77					
78					
79					
80					
81					
82					
83					
84					
85					
86					
87					
88					
89					
90					
91					
92					
93					
94					
95					
96					
97					
98					
99					
100					
101					
102					
103					
104					
105					

[redacted]

DATE 12/3/14	JOB NO. H14789-IA & IC	DRAWN CR	
SCALE N/A		BOM = 1	DWG = 1

TITLE

BILL OF MATERIALS

NEMA 4/12 - UNITRONICS PLC BATCH CONTROL

CUST. LAKE MICHIGAN TRANS-LAKE SHORTCUT, INC.

SHEET 23 OF 23 | DWG. NO. H14789IA-D00 | REV. A

CONTAINS CONFIDENTIAL BUSINESS INFORMATION

CONTAINS CONFIDENTIAL BUSINESS INFORMATION

REV	DESCRIPTION	DATE	BY
A	CHANGED SUFFIXES, ADDED PLC INPUTS	1/6/14	CR

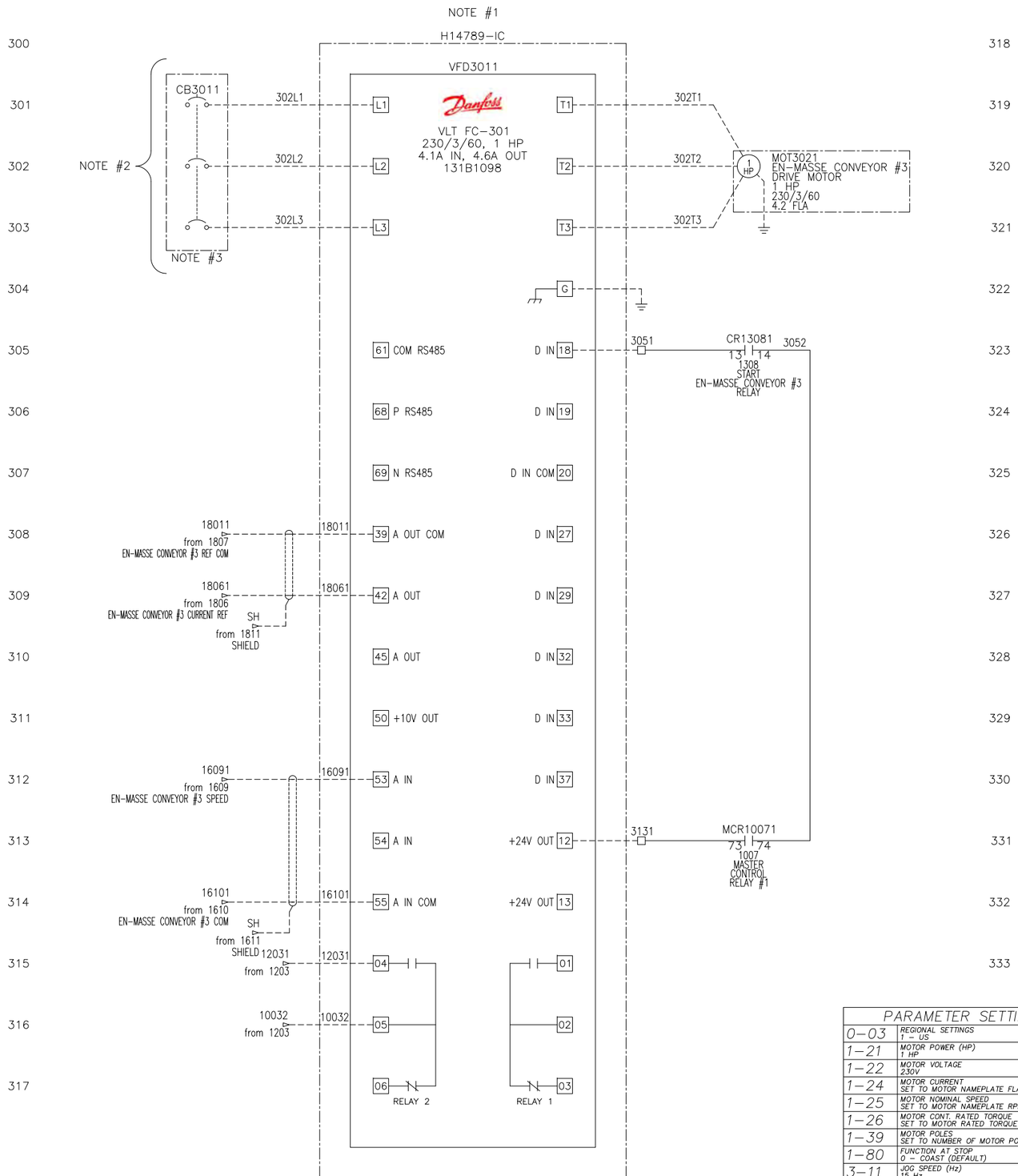

PARAMETER SETTINGS	
0-03	REGIONAL SETTINGS 1 - US
1-21	MOTOR POWER (HP) 1 HP
1-22	MOTOR VOLTAGE 230V
1-24	MOTOR CURRENT SET TO MOTOR NAMEPLATE FLA
1-25	MOTOR NOMINAL SPEED SET TO MOTOR NAMEPLATE RPM
1-26	MOTOR CONT. RATED TORQUE SET TO MOTOR RATED TORQUE IN Nm
1-39	MOTOR POLES SET TO NUMBER OF MOTOR POLES
1-80	FUNCTION AT STOP 0 - COAST (DEFAULT)
3-11	JOG SPEED (Hz) 15 Hz
3-41	RAMP 1 RAMP UP TIME 5 SEC
3-42	RAMP 1 RAMP DOWN TIME 5 SEC

PARAMETER SETTINGS	
4-12	MOTOR SPEED LOW LIMIT (Hz) 15 Hz
4-19	MAX OUTPUT FREQUENCY 60 Hz
5-10	TERMINAL 18 8 - START
5-12	TERMINAL 27 0 - NO OPERATION
5-41	FUNCTION RELAY, RELAY 2 5 - RUNNING
6-50	TERMINAL 42 OUTPUT 133 - MOTOR CUR. 4-20mA
—	– –
—	– –
—	– –
—	– –
DIP S201	TERMINAL 53 ANALOG INPUT ON - 0/4-20mA

NOTE #1: VFD LOCATED OUTSIDE OF MAIN PANEL, H14789-IA
NOTE #2: VFD POWER FED FROM SOURCE OUTSIDE MAIN PANEL, H15789-IA
NOTE #3: FUSE OR CIRCUIT BREAKER REQUIRED BASED ON VFD MANUFACTURER RECOMMENDED OVER CURRENT PROTECTION

[redacted]

DATE 12/3/14	JOB NO. H14789-IA & IC	DRAWN CR	
SCALE N/A		BOM = 1	DWG = 1

TITLE
MOTOR WIRING DIAGRAM
NEMA 4/12 - UNITRONICS PLC BATCH CONTROL

CUST. LAKE MICHIGAN TRANS-LAKE SHORTCUT, INC.

SHEET	DWG. NO.	REV.
3 OF 23	H14789IA-D00	A

US EPA ARCHIVE DOCUMENT

CONTAINS CONFIDENTIAL BUSINESS INFORMATION

REV	DESCRIPTION	DATE	BY
A	CHANGED SUFFIXES, ADDED PLC INPUTS	1/6/14	CR

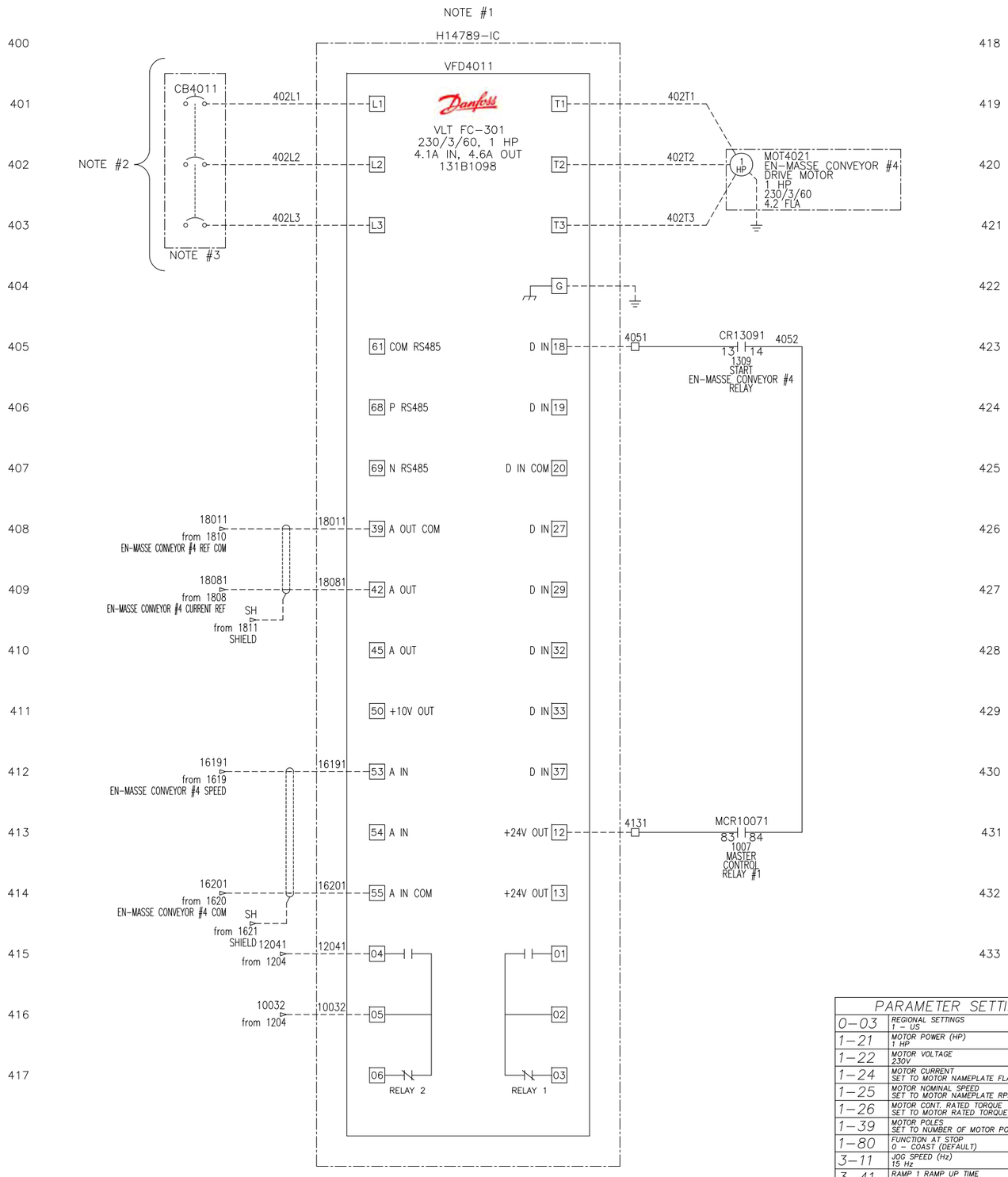

PARAMETER SETTINGS	
0–03	REGIONAL SETTINGS 1 – US
1–21	MOTOR POWER (HP) 1 HP
1–22	MOTOR VOLTAGE 230V
1–24	MOTOR CURRENT SET TO MOTOR NAMEPLATE FLA
1–25	MOTOR NOMINAL SPEED SET TO MOTOR NAMEPLATE RPM
1–26	MOTOR CONT. RATED TORQUE SET TO MOTOR RATED TORQUE IN Nm
1–39	MOTOR POLES SET TO NUMBER OF MOTOR POLES
1–80	FUNCTION AT STOP 0 – COAST (DEFAULT)
3–11	JOG SPEED (Hz) 15 Hz
3–41	RAMP 1 RAMP UP TIME 5 SEC
3–42	RAMP 1 RAMP DOWN TIME 5 SEC

PARAMETER SETTINGS	
4–12	MOTOR SPEED LOW LIMIT (Hz) 15 Hz
4–19	MAX OUTPUT FREQUENCY 60 Hz
5–10	TERMINAL 18 8 – START
5–12	TERMINAL 27 0 – NO OPERATION
5–41	FUNCTION RELAY, RELAY 2 5 – RUNNING
6–50	TERMINAL 42 OUTPUT 133 – MOTOR CUR. 4–20mA
—	– –
—	– –
—	– –
—	– –
DIP S201	TERMINAL 53 ANALOG INPUT ON – 0/4–20mA

NOTE #1: VFD LOCATED OUTSIDE OF MAIN PANEL, H14789–IA
NOTE #2: VFD POWER FED FROM SOURCE OUTSIDE MAIN PANEL, H15789–IA
NOTE #3: FUSE OR CIRCUIT BREAKER REQUIRED BASED ON VFD MANUFACTURER RECOMMENDED OVER CURRENT PROTECTION

[redacted]

DATE 12/3/14	JOB NO. H14789–IA & IC	DRAWN CR	
SCALE N/A		BOM = 1	DWG = 1

TITLE
MOTOR WIRING DIAGRAM
NEMA 4/12 – UNITRONICS PLC BATCH CONTROL

CUST. LAKE MICHIGAN TRANS–LAKE SHORTCUT, INC.

SHEET	DWG. NO.	REV.
4 OF 23	H14789IA–D00	A

US EPA ARCHIVE DOCUMENT

CONTAINS CONFIDENTIAL BUSINESS INFORMATION

REV	DESCRIPTION	DATE	BY
A	CHANGED SUFFIXES, ADDED PLC INPUTS	1/6/14	CR

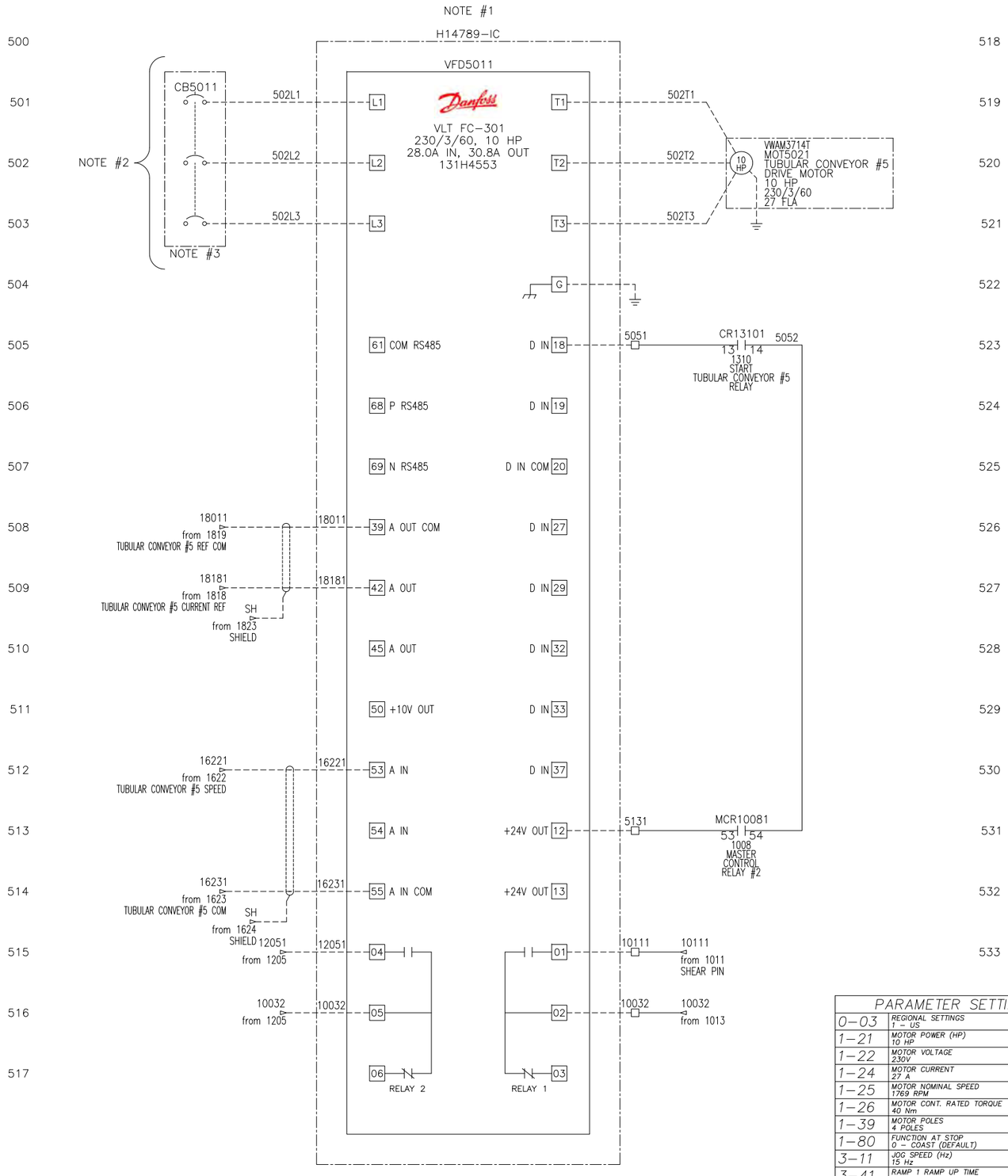

PARAMETER SETTINGS	
0–03	REGIONAL SETTINGS 1 – US
1–21	MOTOR POWER (HP) 10 HP
1–22	MOTOR VOLTAGE 230V
1–24	MOTOR CURRENT 27 A
1–25	MOTOR NOMINAL SPEED 1769 RPM
1–26	MOTOR CONT. RATED TORQUE 40 Nm
1–39	MOTOR POLES 4 POLES
1–80	FUNCTION AT STOP 0 – COAST (DEFAULT)
3–11	JOG SPEED (Hz) 15 Hz
3–41	RAMP 1 RAMP UP TIME 5 SEC
3–42	RAMP 1 RAMP DOWN TIME 5 SEC

PARAMETER SETTINGS	
4–12	MOTOR SPEED LOW LIMIT (Hz) 15 Hz
4–18	CURRENT LIMIT 26.42 A
4–19	MAX OUTPUT FREQUENCY 60 Hz
4–51	WARNING CURRENT HIGH 26.42 A
5–10	TERMINAL 18 8 – START
5–12	TERMINAL 27 0 – NO OPERATION
5–40	FUNCTION RELAY, RELAY 1 14 – ABOVE CURRENT, HIGH
5–41	FUNCTION RELAY, RELAY 2 5 – RUNNING
6–50	TERMINAL 42 OUTPUT 133 – MOTOR CUR. 4–20mA
—	–
DIP S201	TERMINAL 53 ANALOG INPUT ON – 0/4–20mA

NOTE #1: VFD LOCATED OUTSIDE OF MAIN PANEL, H14789–IA
NOTE #2: VFD POWER FED FROM SOURCE OUTSIDE MAIN PANEL, H15789–IA
NOTE #3: FUSE OR CIRCUIT BREAKER REQUIRED BASED ON VFD MANUFACTURER RECOMMENDED OVER CURRENT PROTECTION

[redacted]

DATE 12/3/14	JOB NO. H14789–IA & IC	DRAWN CR	
SCALE N/A		BOM = 1	DWG = 1

TITLE
MOTOR WIRING DIAGRAM
NEMA 4/12 – UNITRONICS PLC BATCH CONTROL

CUST. LAKE MICHIGAN TRANS–LAKE SHORTCUT, INC.

SHEET	DWG. NO.	REV.
5 OF 23	H14789IA–D00	A

US EPA ARCHIVE DOCUMENT

CONTAINS CONFIDENTIAL BUSINESS INFORMATION

REV	DESCRIPTION	DATE	BY
A	CHANGED SUFFIXES, ADDED PLC INPUTS	1/6/14	CR

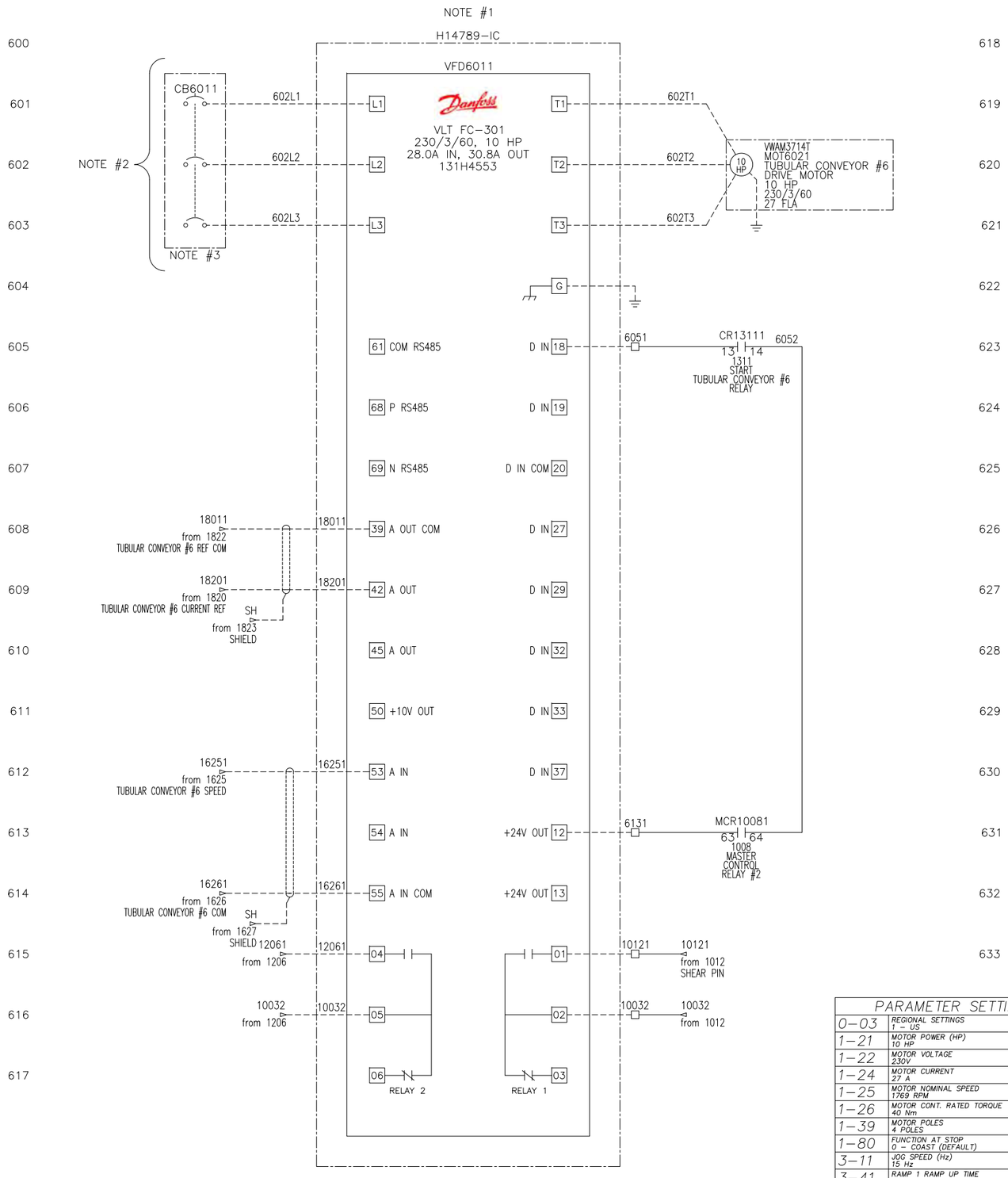

PARAMETER SETTINGS	
0–03	REGIONAL SETTINGS 1 – US
1–21	MOTOR POWER (HP) 10 HP
1–22	MOTOR VOLTAGE 230V
1–24	MOTOR CURRENT 27 A
1–25	MOTOR NOMINAL SPEED 1769 RPM
1–26	MOTOR CONT. RATED TORQUE 40 Nm
1–39	MOTOR POLES 4 POLES
1–80	FUNCTION AT STOP 0 – COAST (DEFAULT)
3–11	JOG SPEED (Hz) 15 Hz
3–41	RAMP 1 RAMP UP TIME 5 SEC
3–42	RAMP 1 RAMP DOWN TIME 5 SEC

PARAMETER SETTINGS	
4–12	MOTOR SPEED LOW LIMIT (Hz) 15 Hz
4–18	CURRENT LIMIT 26.42 A
4–19	MAX OUTPUT FREQUENCY 60 Hz
4–51	WARNING CURRENT HIGH 26.42 A
5–10	TERMINAL 18 8 – START
5–12	TERMINAL 27 0 – NO OPERATION
5–40	FUNCTION RELAY, RELAY 1 14 – ABOVE CURRENT, HIGH
5–41	FUNCTION RELAY, RELAY 2 5 – RUNNING
6–50	TERMINAL 42 OUTPUT 133 – MOTOR CUR. 4–20mA
—	–
DIP S201	TERMINAL 53 ANALOG INPUT ON – 0/4–20mA

NOTE #1: VFD LOCATED OUTSIDE OF MAIN PANEL, H14789–IA
NOTE #2: VFD POWER FED FROM SOURCE OUTSIDE MAIN PANEL, H15789–IA
NOTE #3: FUSE OR CIRCUIT BREAKER REQUIRED BASED ON VFD MANUFACTURER RECOMMENDED OVER CURRENT PROTECTION

[redacted]

DATE 12/3/14	JOB NO. H14789–IA & IC	DRAWN CR	
SCALE N/A		BOM = 1	DWG = 1

TITLE
MOTOR WIRING DIAGRAM
NEMA 4/12 – UNITRONICS PLC BATCH CONTROL

CUST. LAKE MICHIGAN TRANS–LAKE SHORTCUT, INC.

SHEET	DWG. NO.	REV.
6 OF 23	H14789IA–D00	A

US EPA ARCHIVE DOCUMENT

CONTAINS CONFIDENTIAL BUSINESS INFORMATION

REV	DESCRIPTION	DATE	BY
A	CHANGED SUFFIXES, ADDED PLC INPUTS	1/6/14	CR

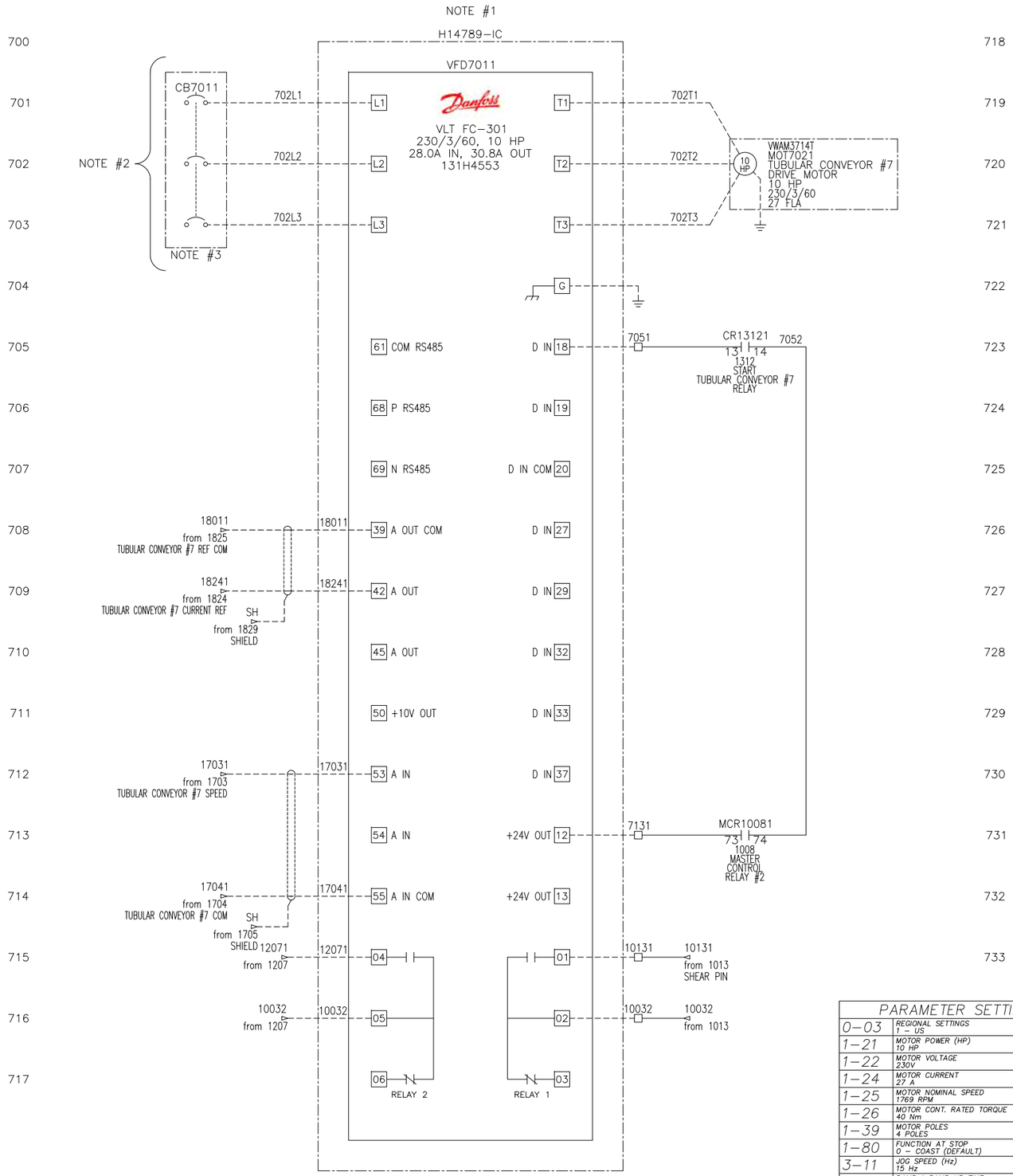

PARAMETER SETTINGS	
0–03	REGIONAL SETTINGS 1 – US
1–21	MOTOR POWER (HP) 10 HP
1–22	MOTOR VOLTAGE 230V
1–24	MOTOR CURRENT 27 A
1–25	MOTOR NOMINAL SPEED 1769 RPM
1–26	MOTOR CONT. RATED TORQUE 40 Nm
1–39	MOTOR POLES 4 POLES
1–80	FUNCTION AT STOP 0 – COAST (DEFAULT)
3–11	JOG SPEED (Hz) 15 Hz
3–41	RAMP 1 RAMP UP TIME 5 SEC
3–42	RAMP 1 RAMP DOWN TIME 5 SEC

PARAMETER SETTINGS	
4–12	MOTOR SPEED LOW LIMIT (Hz) 15 Hz
4–18	CURRENT LIMIT 26.42 A
4–19	MAX OUTPUT FREQUENCY 60 Hz
4–51	WARNING CURRENT HIGH 26.42 A
5–10	TERMINAL 18 8 – START
5–12	TERMINAL 27 0 – NO OPERATION
5–40	FUNCTION RELAY, RELAY 1 14 – ABOVE CURRENT, HIGH
5–41	FUNCTION RELAY, RELAY 2 5 – RUNNING
6–50	TERMINAL 42 OUTPUT 133 – MOTOR CUR. 4–20mA
—	–
DIP S201	TERMINAL 53 ANALOG INPUT ON – 0/4–20mA

NOTE #1: VFD LOCATED OUTSIDE OF MAIN PANEL, H14789–IA
NOTE #2: VFD POWER FED FROM SOURCE OUTSIDE MAIN PANEL, H15789–IA
NOTE #3: FUSE OR CIRCUIT BREAKER REQUIRED BASED ON VFD MANUFACTURER RECOMMENDED OVER CURRENT PROTECTION

[redacted]

DATE 12/3/14	JOB NO. H14789–IA & IC	DRAWN CR	
SCALE N/A		BOM = 1	DWG = 1

TITLE
MOTOR WIRING DIAGRAM
NEMA 4/12 – UNITRONICS PLC BATCH CONTROL

CUST. LAKE MICHIGAN TRANS–LAKE SHORTCUT, INC.

SHEET	DWG. NO.	REV.
7 OF 23	H14789IA–D00	A

US EPA ARCHIVE DOCUMENT

CONTAINS CONFIDENTIAL BUSINESS INFORMATION

REV	DESCRIPTION	DATE	BY
A	CHANGED SUFFIXES, ADDED PLC INPUTS	1/6/14	CR

800

801

802

803

804

805

806

807

808

809

810

811

812

813

814

815

816

817

818

819

820

821

822

823

824

825

826

827

828

829

830

831

832

833

[redacted]

DATE 12/3/14	JOB NO. H14789-IA & IC	DRAWN CR	
SCALE N/A		BOM = 1	DWG = 1

TITLE

RESERVED

NEMA 4/12 – UNITRONICS PLC BATCH CONTROL

CUST. LAKE MICHIGAN TRANS-LAKE SHORTCUT, INC.

SHEET 8 OF 23	DWG. NO. H14789IA-D00	REV. A

US EPA ARCHIVE DOCUMENT

US EPA ARCHIVE DOCUMENT

CONTAINS CONFIDENTIAL BUSINESS INFORMATION

REV	DESCRIPTION	DATE	BY
A	CHANGED SUFFIXES, ADDED PLC INPUTS	1/6/14	CR

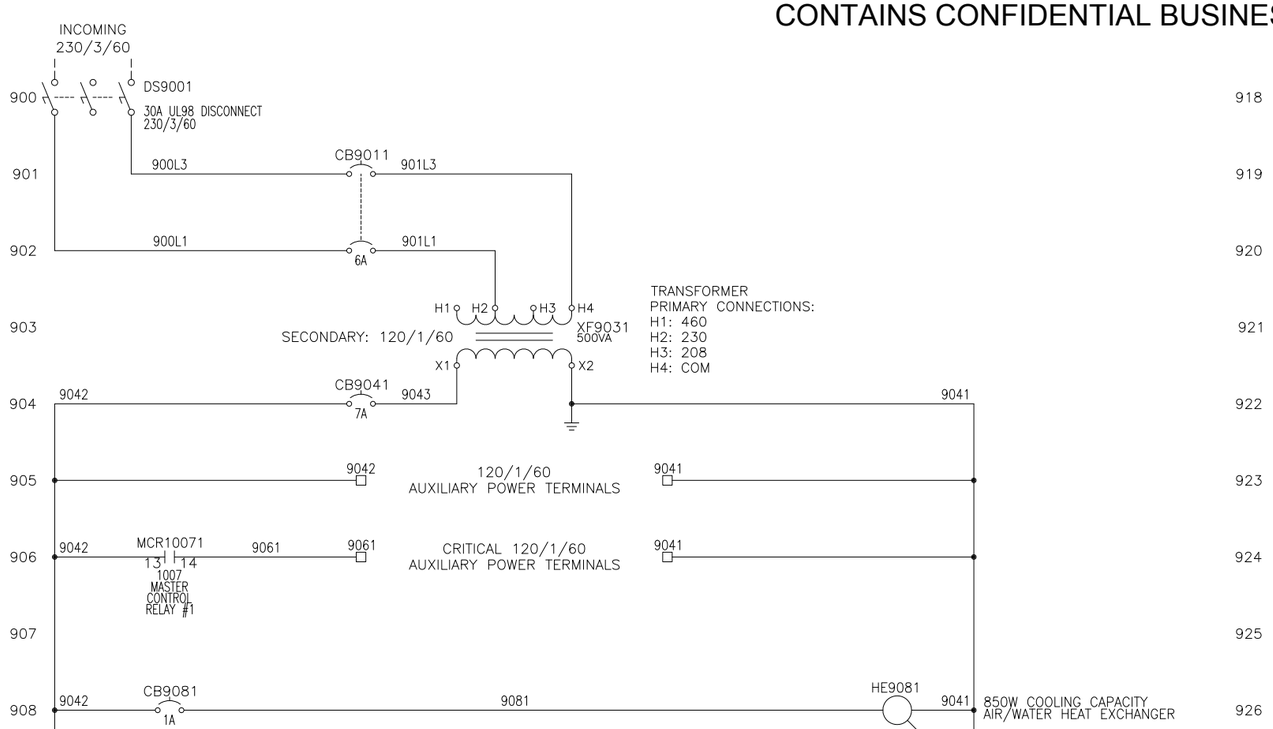

[redacted]

DATE 12/3/14	JOB NO. H14789-IA & IC	DRAWN CR	
SCALE N/A		BOM = 1	DWG = 1

TITLE

120VAC WIRING DIAGRAM

NEMA 4/12 – UNITRONICS PLC BATCH CONTROL

CUST. *LAKE MICHIGAN TRANS–LAKE SHORTCUT, INC.*

SHEET	DWG. NO.	REV.
9 OF 23	H14789IA–D00	A

REV	DESCRIPTION	DATE	BY
A	CHANGED SUFFIX FROM HB TO IB	1/6/14	CR

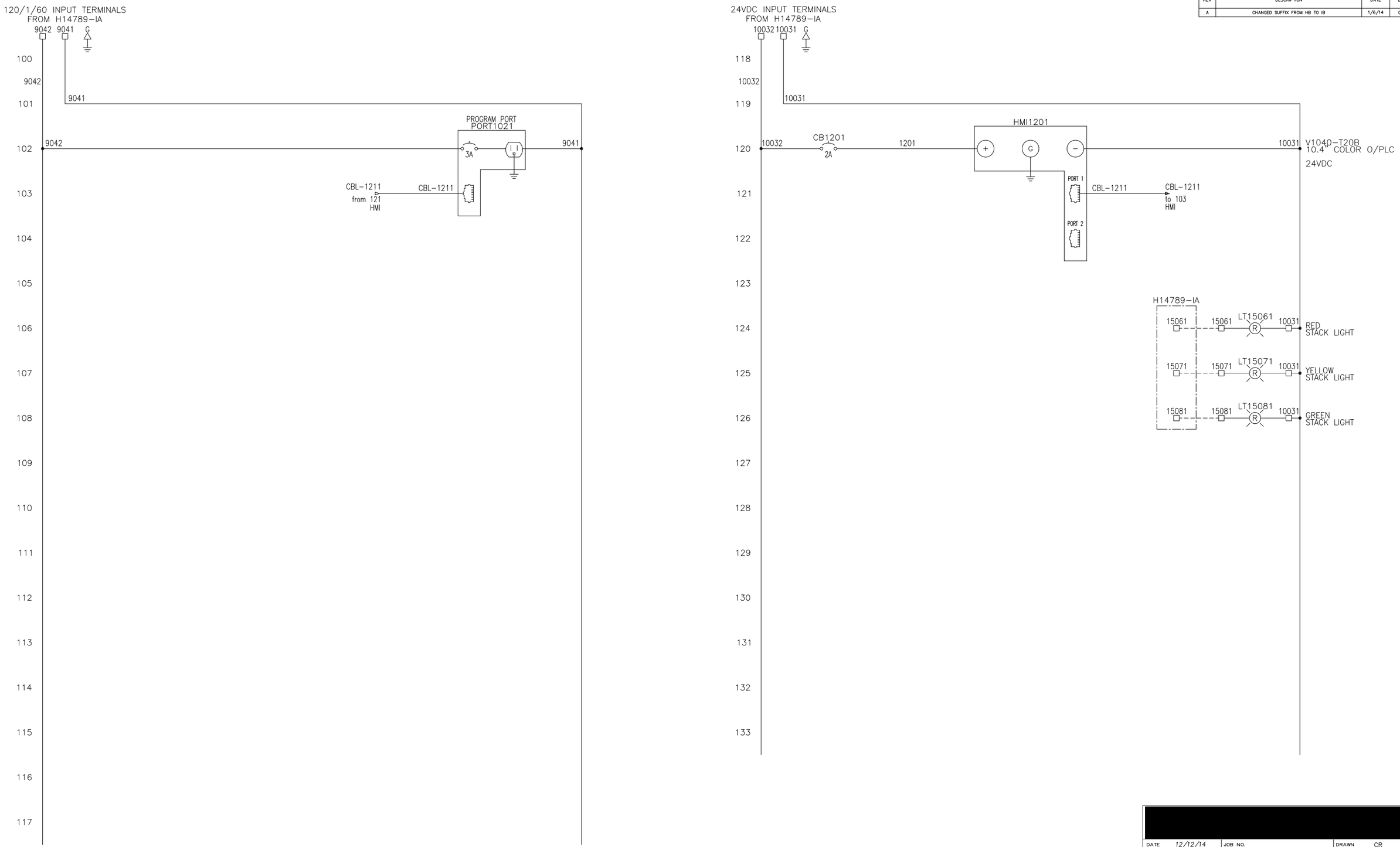

[redacted]

DATE 12/12/14	JOB NO. H14789-IB	DRAWN CR	
SCALE N/A		BOM = 1	DWG = 1

TITLE
120VAC/24VDC WIRING DIAGRAM
HMI OP-STATION

CUST. LAKE MICHIGAN TRANS-LAKE SHORTCUT, INC.

SHEET 1 OF 3	DWG. NO. H14789IB-D00	REV. A

CONTAINS CONFIDENTIAL BUSINESS INFORMATION

REV	DESCRIPTION	DATE	BY
A	CHANGED SUFFIX FROM HB TO IB	1/6/14	CR

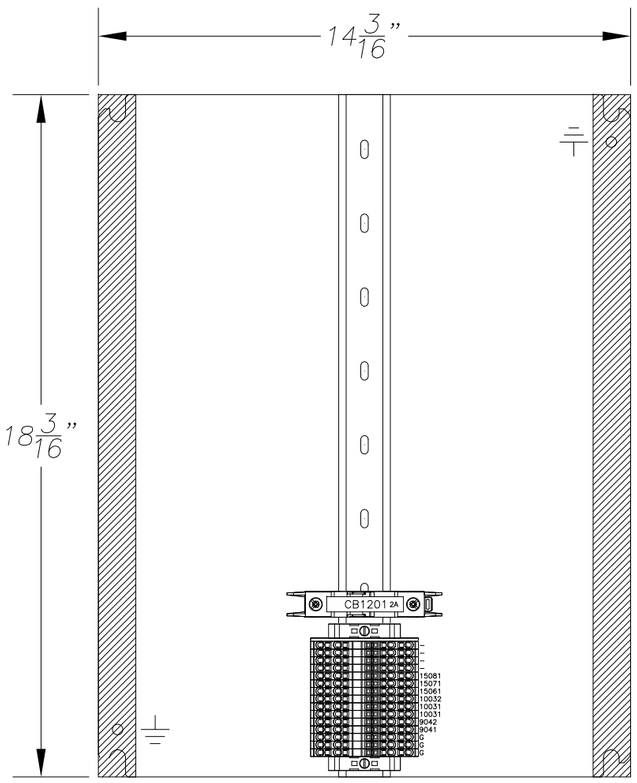

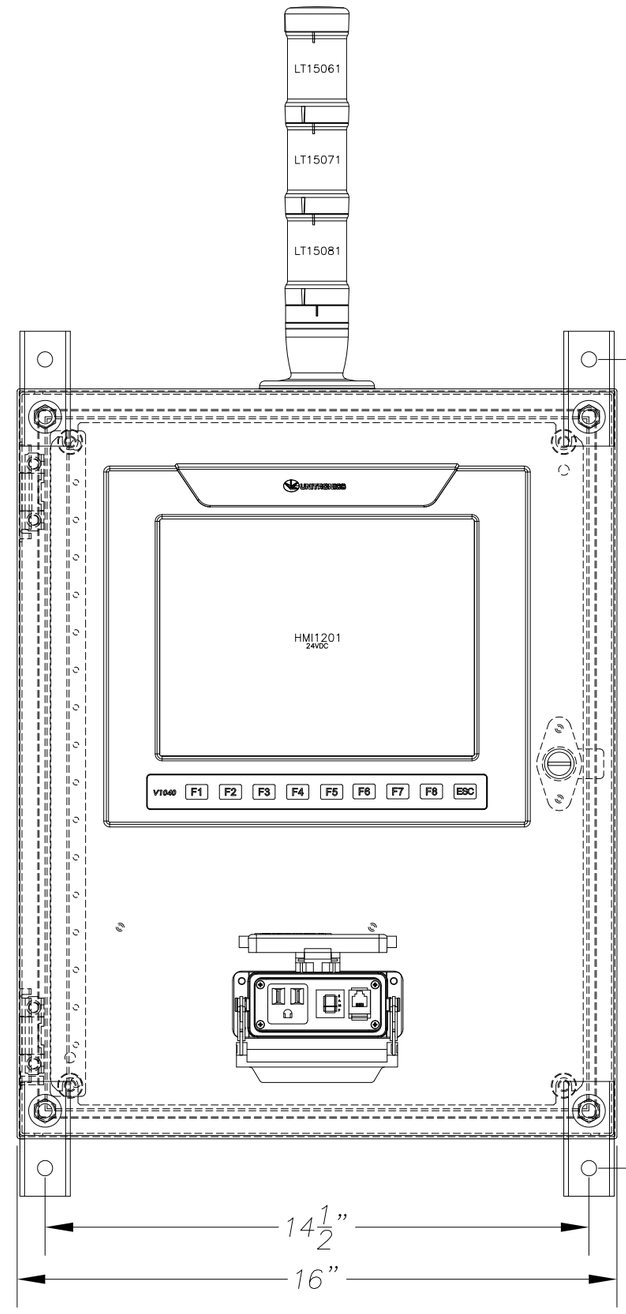

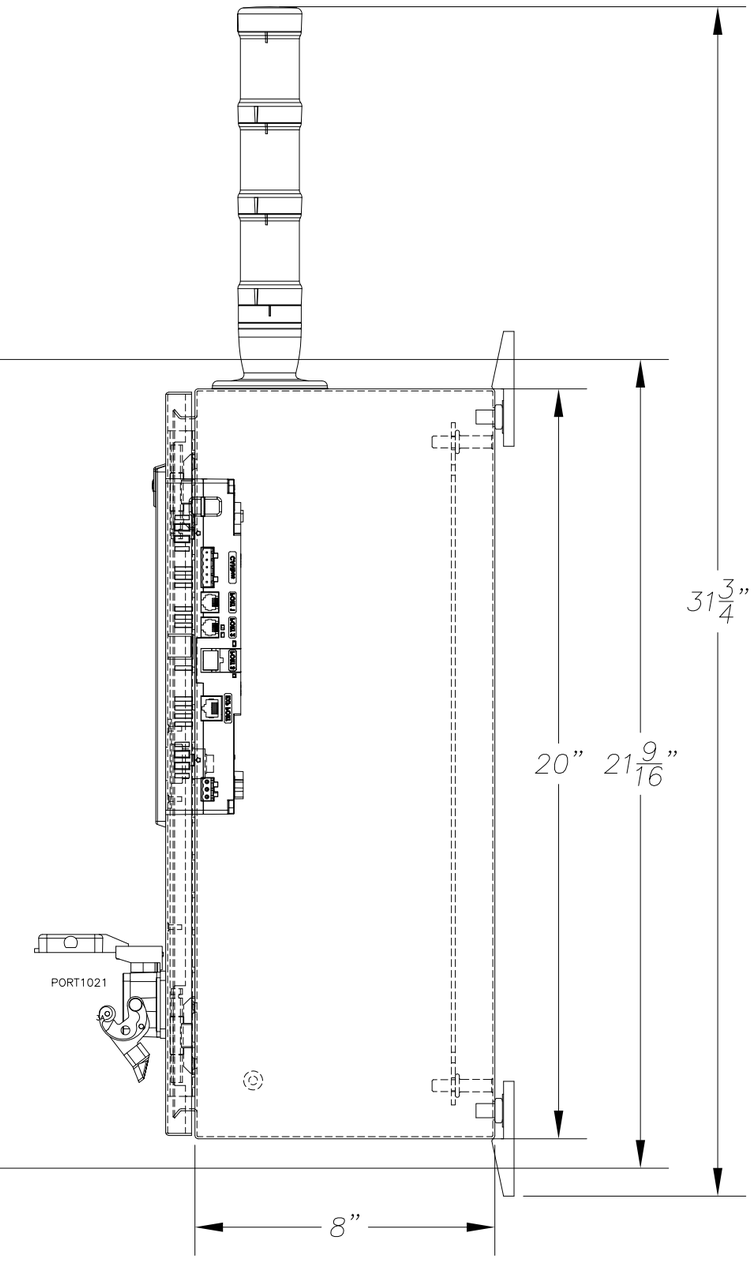

VOLTAGE:	120 VOLT
PHASE & FREQ.:	1PH., 60HZ
FULL LOAD CURRENT:	4 AMP
ENCLOSURE RATING:	TYPE 4
SCHEMATIC:	H14789IB-D00
MFG. BY:	JP Motors and Drives

[redacted]

DATE 12/12/14	JOB NO. H14789-IB	DRAWN CR	
SCALE N/A		BOM = 1	DWG = 1

TITLE

PANEL LAYOUT

HMI OP-STATION

CUST. LAKE MICHIGAN TRANS-LAKE SHORTCUT, INC.

SHEET 2 OF 3 | DWG. NO. H14789IB-D00 | REV. A

CONTAINS CONFIDENTIAL BUSINESS INFORMATION

REV	DESCRIPTION	DATE	BY
A	CHANGED SUFFIX FROM HB TO IB	1/6/14	CR

ITEM	QTY	PART #	MANUFACTURE	DESCRIPTION	DESCRIPTOR
1	1	CSD20168	HOFFMAN	20"x16"x8" NEMA 4/12 ENCLOSURE	.
2	1	CP2016G	HOFFMAN	GALVANIZED SUB PANEL	.
3	1	CMFK	HOFFMAN	FOOT KIT	.
4	1	DPI-RJ11-R16	MENCOM	PROG. PORT, SIMPLEX OUTLET, RJ12-F/F, 3A CB	PORT1021
5	1	FAZ-C2/1-NA-SP	EATON	1 POLE 2A UL489 CIRCUIT BREAKER, C-CURVE	CB1201
6	1	V1040-T20B	UNITRONICS	V1040 O/PLC 10.4" COLOR TOUCH SCREEN	HMI1201
7	1	2GB MICROSD	TRANSCEND	2GB MICROSD CARD	HMI1201
8	1	SL4-PIB-EMH	EATON	STACK LIGHT BASE	LT15061-15081
9	1	SL4-L24-R	EATON	24VDC RED LED STACK LIGHT MODULE	LT15061
10	1	SL4-L24-Y	EATON	24VDC YELLOW LED STACK LIGHT MODULE	LT15071
11	1	SL4-L24-G	EATON	24VDC GREEN LED STACK LIGHT MODULE	LT15081
12	12	XBPT25D22	EATON	5.2mm 4-WIRE SPRING CAGE TERMINAL	.
13	3	XBPT25D22PE	EATON	5.2mm 4-WIRE SPRING CAGE GROUND TERMINAL	.
14	1	XBACPT25D22	EATON	END PLATE FOR 5.2mm 4-WIRE SPRING CAGE TERMINAL	.
15	2	XBAES35C	EATON	SCREW ON END STOP	.
16	3'	F.75X1.5LG6	PANDUIT	0.75"x1.5" LIGHT GRAY WIREWAY	.
17	3'	C.75LG6	PANDUIT	0.75" LIGHT GRAY WIREWAY COVER	.
18	1.5'	0801733	PHOENIX	35mm DIN RAIL	.
19					
20					
21					
22					
23					
24					
25					
26					
27					
28					
29					
30					
31					
32					
33					
34					
35					
36					
37					
38					
39					
40					
41					
42					
43					
44					
45					
46					
47					
48					
49					
50					
51					
52					
53					
54					
55					
56					

ITEM	QTY	PART #	MANUFACTURE	DESCRIPTION	DESCRIPTOR
57					
58					
59					
60					
61					
62					
63					
64					
65					
66					
67					
68					
69					
70					
71					
72					
73					
74					
75					
76					
77					
78					
79					
80					
81					
82					
83					
84					
85					
86					
87					
88					
89					
90					
91					
92					
93					
94					
95					
96					
97					
98					
99					
100					
101					
102					
103					
104					
105					

[redacted]

DATE 12/12/14	JOB NO. H14789-IB	DRAWN CR	
SCALE N/A		BOM = 1	DWG = 1

TITLE

BILL OF MATERIALS

HMI OP-STATION

CUST. LAKE MICHIGAN TRANS-LAKE SHORTCUT, INC.

SHEET 3 OF 3	DWG. NO. H14789IB-D00	REV. A

CONTAINS CONFIDENTIAL BUSINESS INFORMATION

CONTAINS CONFIDENTIAL BUSINESS INFORMATION

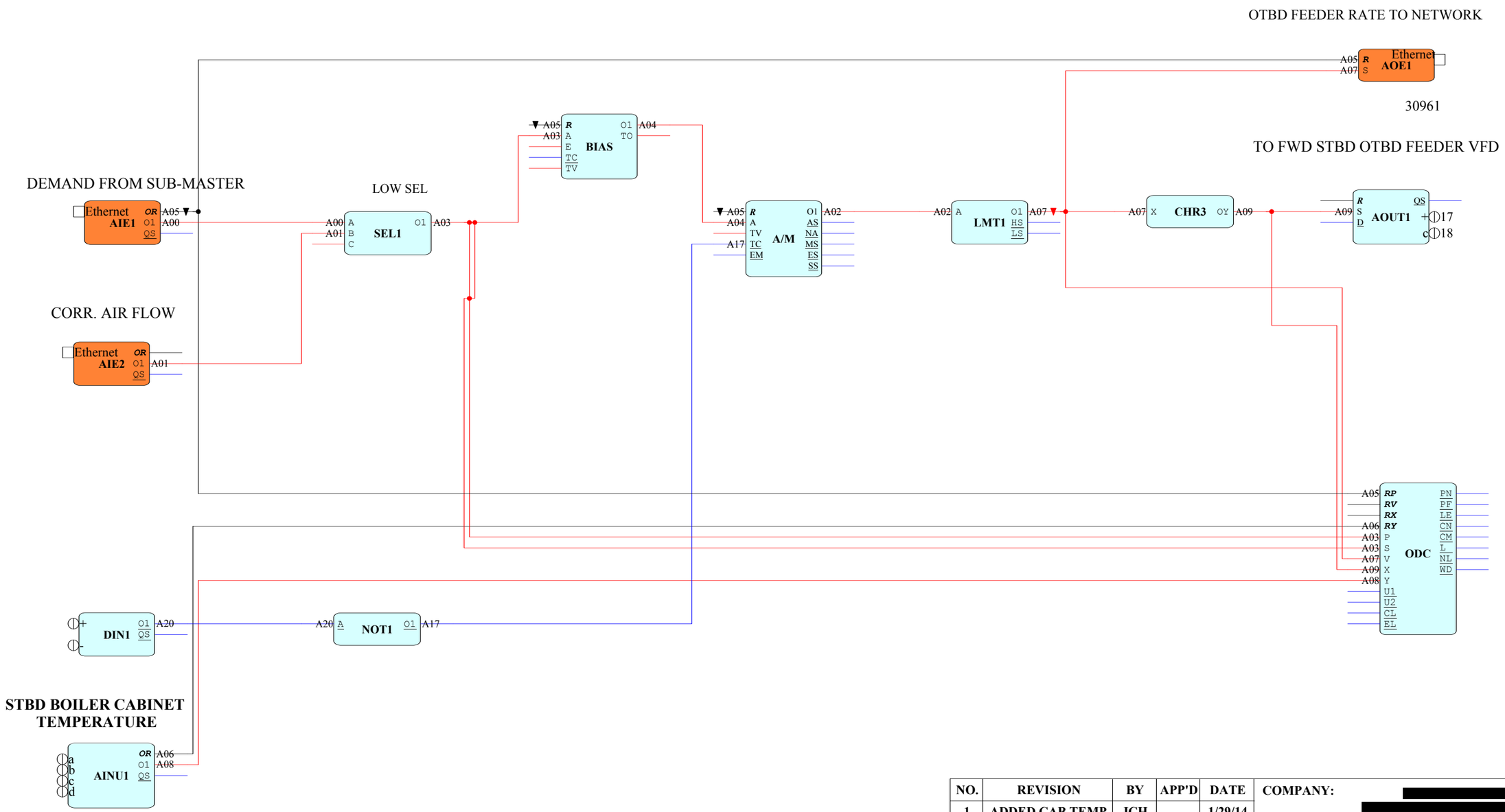

NO.	REVISION	BY	APP'D	DATE
1	ADDED CAB TEMP.	JCH		1/29/14

COMPANY: [redacted]

CUSTOMER:

DRAWN	DATE
JCHLLC	1/15/14
APP'D	DATE

TITLE: SS BADGER FWD STBD OUTBOARD COAL FEEDER

DRWG NO.:

CONTAINS CONFIDENTIAL BUSINESS INFORMATION

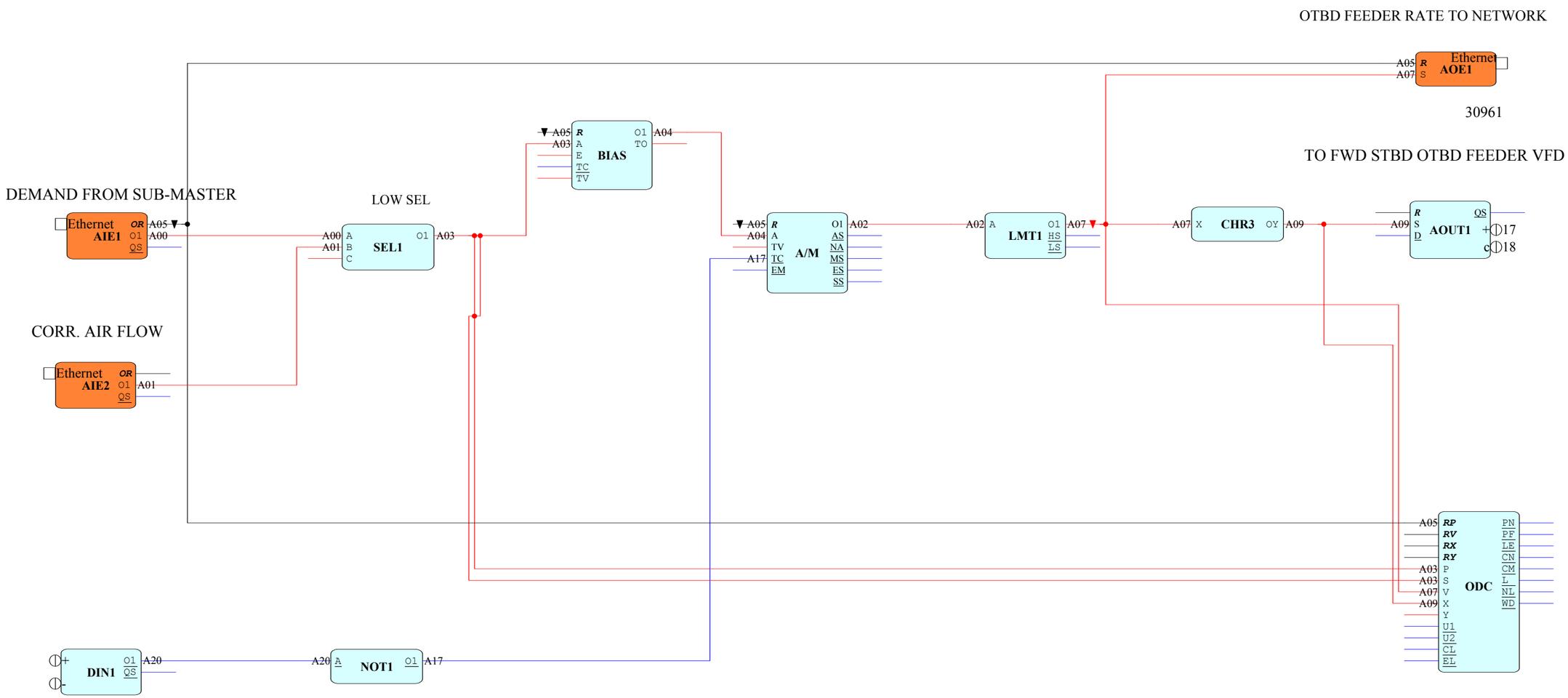

NO.	REVISION	BY	APP'D	DATE	COMPANY: [redacted]		
					CUSTOMER:		
					DRAWN JCHLLC	DATE 1/15/14	TITLE: SS BADGER FWD STBD OUTBOARD COAL FEEDER
					APP'D	DATE	
							DRWG NO.:

CONTAINS CONFIDENTIAL BUSINESS INFORMATION

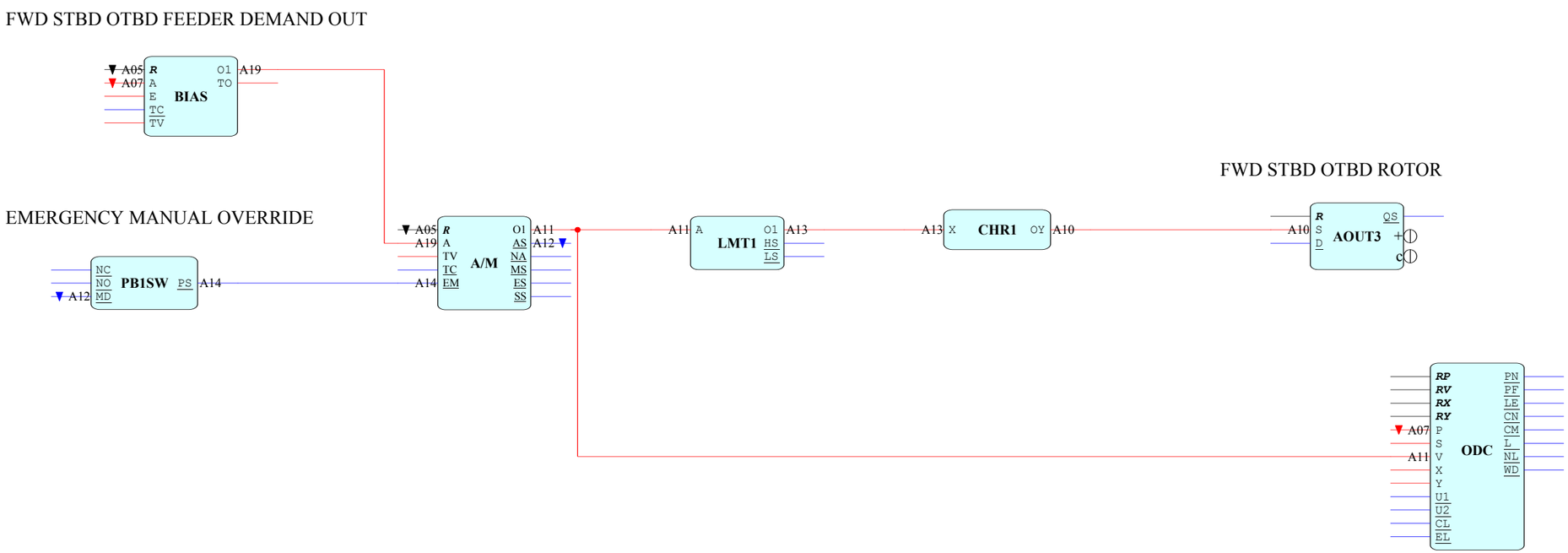

NO.	REVISION	BY	APP'D	DATE	COMPANY: [redacted]		
					CUSTOMER:		
					DRAWN JCHLLC	DATE 1/15/14	TITLE: SS BADGER FWD STBD OUTBOARD ROTOR LOOP
					APP'D	DATE	
							DRWG NO.:

CONTAINS CONFIDENTIAL BUSINESS INFORMATION

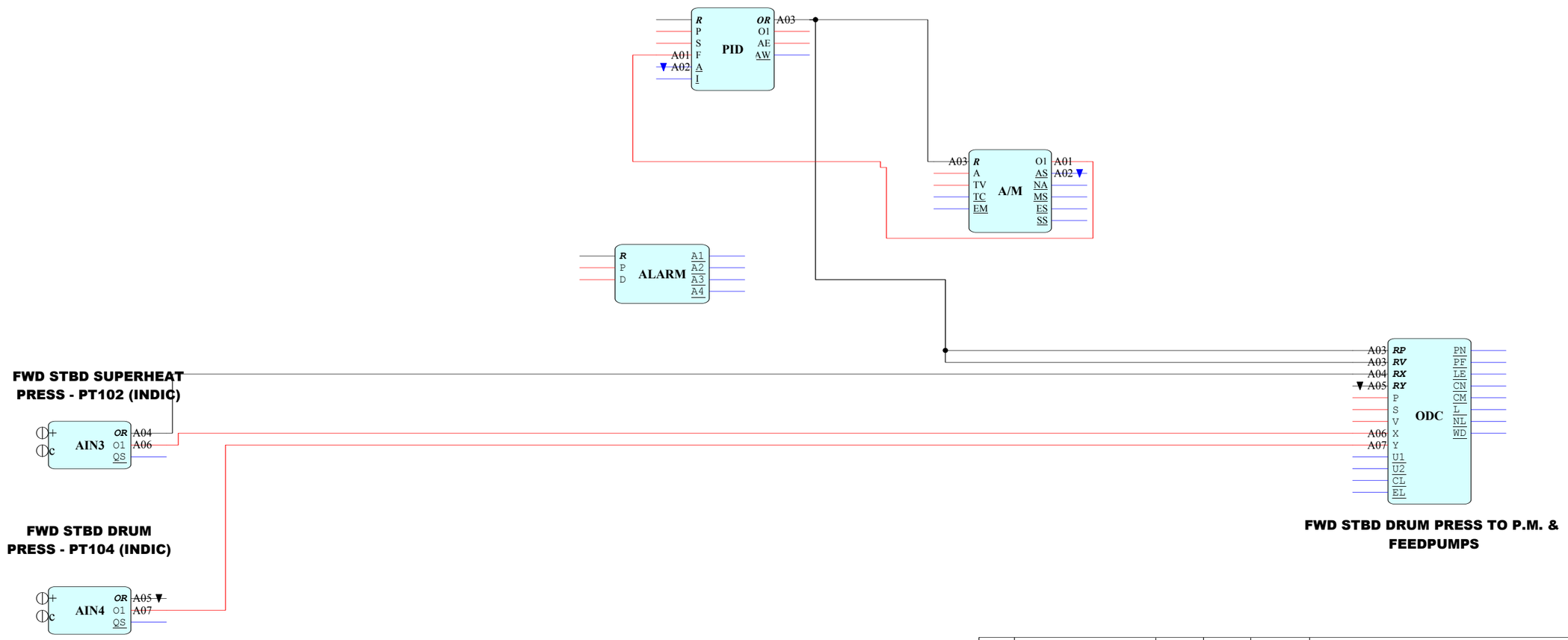

NO.	REVISION	BY	APP'D	DATE	COMPANY: [redacted]		
					CUSTOMER:		
					DRAWN JCHLLC	DATE 1/24/14	TITLE: SS BADGER FWD STBD BLR STEAM PRESS LOOP
					APP'D	DATE	
							DRWG NO.:

CONTAINS CONFIDENTIAL BUSINESS INFORMATION

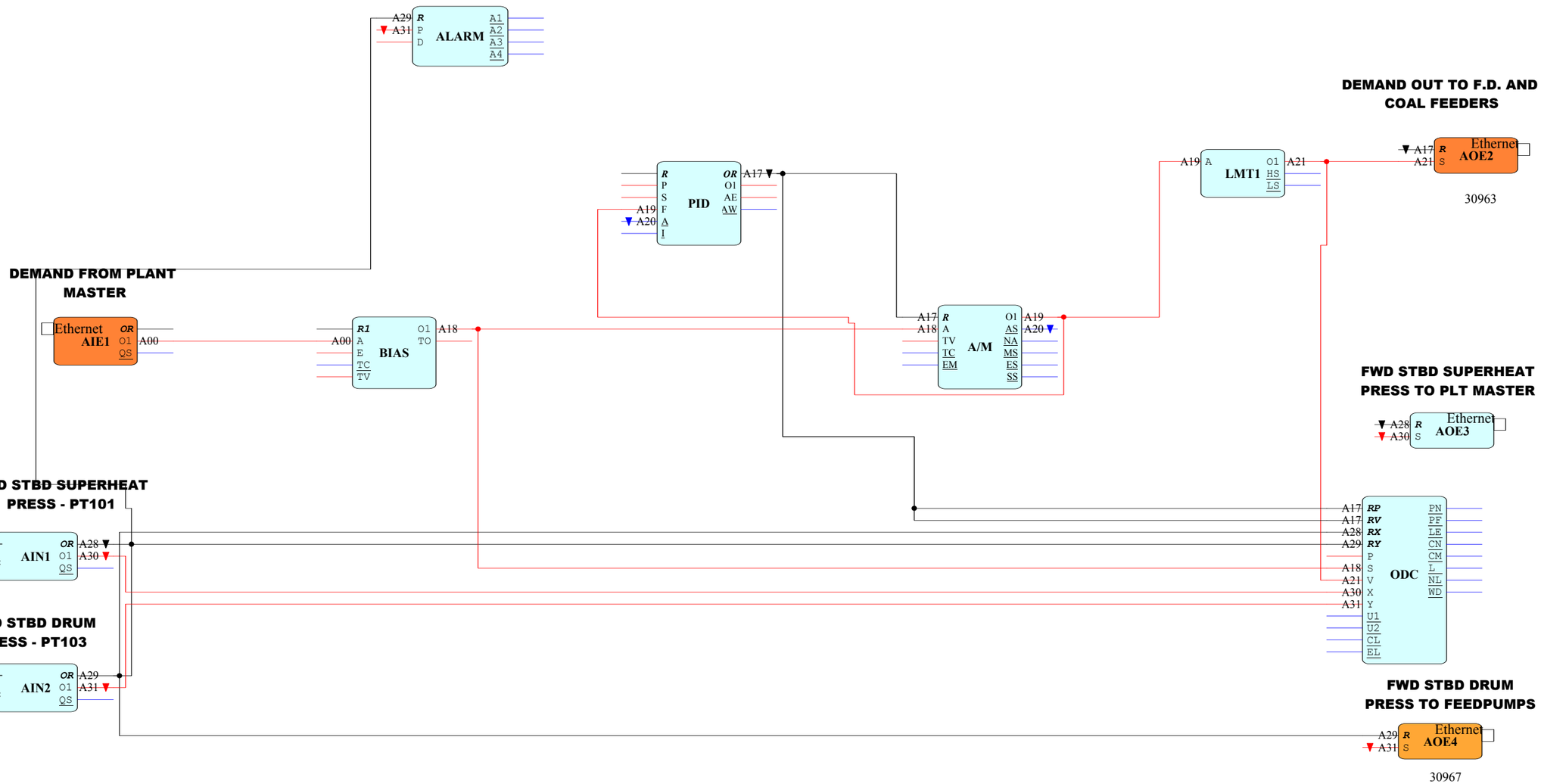

NO.	REVISION	BY	APP'D	DATE	COMPANY: [redacted]		
					CUSTOMER:		
					DRAWN JCHLLC	DATE 1/14/14	TITLE: SS BADGER FWD STBD BLR SUB-MASTER W/ BIAS
					APP'D	DATE	
							DRWG NO.:

CONTAINS CONFIDENTIAL BUSINESS INFORMATION

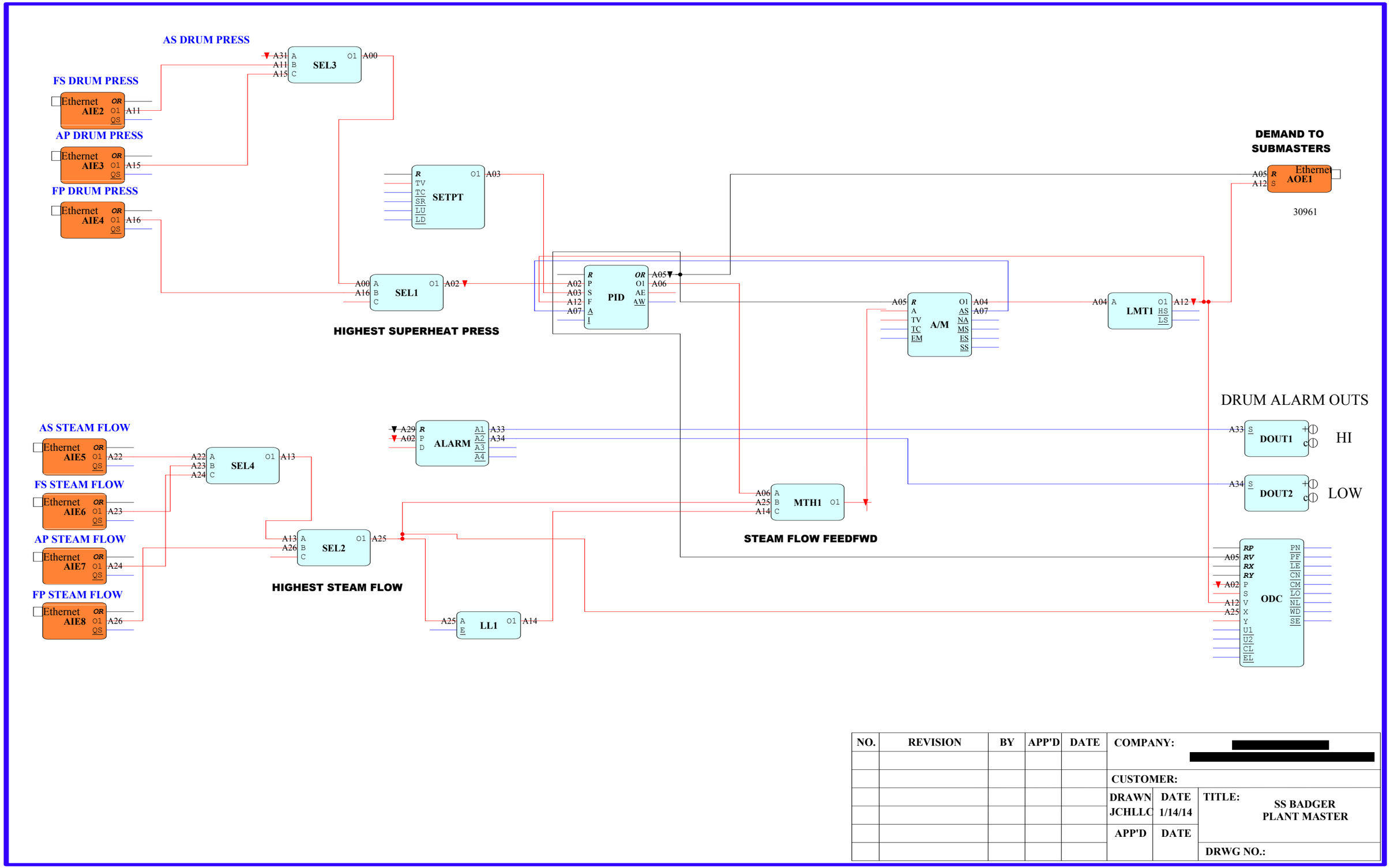

NO.	REVISION	BY	APP'D	DATE	COMPANY: [redacted]		
					CUSTOMER:		
					DRAWN JCHLLC	DATE 1/14/14	TITLE: SS BADGER PLANT MASTER
					APP'D	DATE	
							DRWG NO.: