US EPA ARCHIVE DOCUMENT

165-F-026-WI

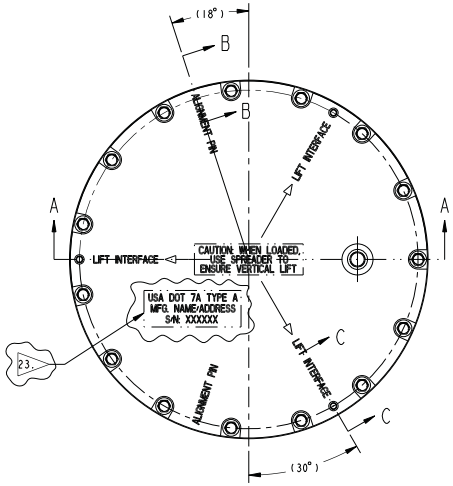

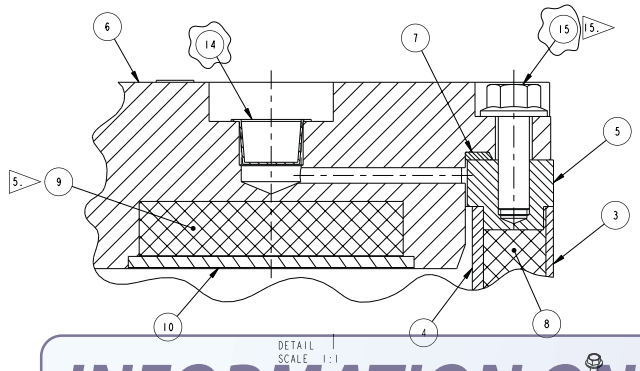

DETAIL 1
SCALE 1:1

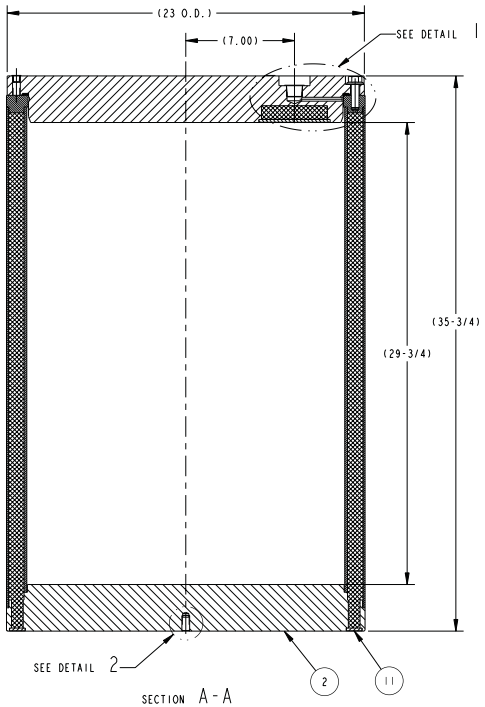

SECTION A-A

1 SHIELDED CONTAINER ASSEMBLY

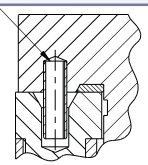

SECTION B-B
SCALE 1:1

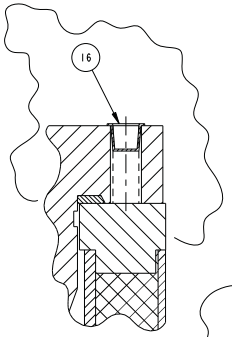

SECTION C-C
SCALE 1:1

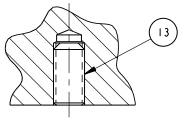

DETAIL 2
SCALE 1:1

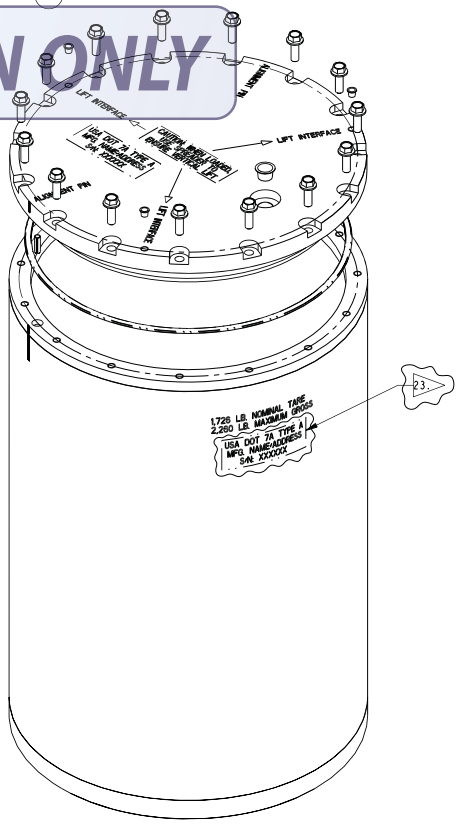

REFERENCE VIEW

INFORMATION ONLY

LIST OF MATERIAL

TYPE/LEVEL	QTY REQ'D	ITEM NO.	NAME/DESCRIPTION	NOTE NO.	DRAWING NUMBER OR PART ID. NUMBER	MATERIAL SPECIFICATION MATERIAL	MATERIAL SPECIFICATION STD/NUMBER
ASM	1	1	SHIELDED CONTAINER ASSEMBLY		165-F-026-WI	-	-
PRT	1	2	BASE		165-F-026-W5	CS	SEE NOTE 2
PRT	1	3	OUTER SHELL		165-F-026-W5	CS	SEE NOTE 4
PRT	1	4	INNER SHELL		165-F-026-W5	CS	SEE NOTE 4
PRT	1	5	FLANGE		165-F-026-W5	CS	SEE NOTE 2
PRT	1	6	LID		165-F-026-W2	CS	SEE NOTE 2
PRT	1	7	SEAL	B	165-F-026-W3	SEE NOTE 3	SEE NOTE 3
PRT	1	8	LEAD SHIELD		165-F-026-W1	LEAD	SEE NOTE 21
PRT	1	9	FILTER SHIELD PLUG		165-F-026-W2	LEAD	SEE NOTE 21
PRT	1	10	FILTER SHIELD CAP		165-F-026-W2	CS	SEE NOTE 4
PRT	3	11	PLUG		165-F-026-W3	CS	SEE NOTE 4
PRT	2	12	SLOTTED SPRING PIN, (Ø3/8 X 1-1/4 LG.)	A	98296A948	CS	ASME B18.8.2
PRT	1	13	SOCKET SET SCREW, Ø1/2-13UNC X 1 LG.	A	91385A712	BLK AS	ASTM F912
PRT	1	14	PROTECTIVE PLUG, 3/4 PIPE PRESS-FIT	A	4491K47	LDPE	-
PRT	15	15	FLANGE HEX HD CAP SCREW, 1/2-13UNC X 1-1/2 LG			BLK AS	SAE J429, GR 8
PRT	3	16	PROTECTIVE PLUG, 1/2 PIPE PRESS-FIT	A	4491K42	LDPE	-

NOMINAL ASSEMBLY WEIGHT: 1726 LB.

SUPPLIERS

A. McMASTER CARR OR APPROVED EQUIVALENT

B. IPOTEC INC. (SS20) OR APPROVED EQUIVALENT

NOTES

CONTINUES ON SHT. 2

1. ALL WELDS SHALL CONFORM TO AND BE VISUALLY INSPECTED TO THE REQUIREMENTS OF AWS D1.1. SHELL MATERIALS MAY BE JOINED FROM ONE OR MORE PIECES UTILIZING COMPLETE JOINT PENETRATION (CJP) WELDS AND SHALL BE MADE AND VISUALLY INSPECTED PER THE ABOVE REQUIREMENTS.
2. MATERIAL: ASTM A516, GR 70 (PLATE) NORMALIZED TO FINE GRAIN PRACTICE OR ASTM A266, GR 2 (FORGING) NORMALIZED TO FINE GRAIN PRACTICE.
3. MATERIAL: SILICONE SPONGE, ADHESIVE ONE SIDE, CLOSED-CELL, MEDIUM-SOFT.
4. MATERIAL: ASTM A1011, GR 45, SS (STRUCTURAL STEEL). OPTIONAL FOR ITEMS 3 & 4: ASTM A333, GR 9; ASTM A501, GR B; ASTM A714, CL 2, GR 1.
5. INSTALL USING A CLASS FN2 FORCE FIT PER ANSI B4.1. OR OPTIONALLY, LEAD WOOL MAY BE USED AS REQUIRED FOR TIGHT FIT.
6. RECOMMENDED FOR LIFTING : UTILIZE A 1/2 HEAVY-DUTY SAFETY HOIST RING, McMASTER CARR, P/N 3052T87 OR ENGINEER APPROVED EQUAL.
7. BODY ASSEMBLY INVERTED FOR LEAD POUR CONFIGURATION.
8. CONTAINER SHALL BE EQUIPPED WITH ONE USER-SUPPLIED FILTER VENT PER DOE/WIPP 08-3384 IN ACCORDANCE WITH SECTION 2.5 OF THE CH-TRAMPAC.
9. AFTER LEAD POUR, CUT RISERS OFF BASE, FLUSH.
10. STENCIL AFTER PAINTING WITH 1/4 IN. MIN HIGH CONTRASTING CHARACTERS: (WHERE SHOWN)
    - ALIGNMENT PIN MARKS (AS SHOWN)
    - "CAUTION: WHEN LOADED, USE SPREADER TO ENSURE VERTICAL LIFT"
    - "ALIGNMENT PIN" (2X)
    - "LIFT INTERFACE" (3X)
    - ARROW MARKS (3X, OPTIONAL)
    - "1,726 LB. NOMINAL TARE 2,260 LB. MAXIMUM GROSS" (AS SHOWN)
11. UP TO 1/32 WELD REINFORCEMENT ALLOWED.
12. BLAST AND PAINT/COAT ALL EXPOSED EXTERIOR SURFACES, EXCLUDING INTERFACING/THREADED HOLES AND ASSOCIATED COUNTERBORES.
13. MACHINED FROM LEAD PLATE.
14. FABRICATE IN ACCORDANCE WITH WASHINGTON TRU-SOLUTIONS SPECIFICATION E-1-478. USE IN ACCORDANCE WITH WP 08-PT.16.

REV	DESCRIPTION	DFTR / DATE	CHKR / DATE	COG / DATE	DFTG MGR / DATE	ECO	PWR
B	REVISED PER ADD. #2	JMN 6/12/08	BAD 6/12/08	TD 6/12/08	BB 6/16/08	11834	N/A
A	REVISED PER ADD. #1	JMN 9/13/07	BAD 9/14/07	TD 9/14/07	BB 9/14/07	11834	N/A
REV	ISSUE DESCRIPTION	DFTR DATE	CHKR DATE	COG DATE	DFTG MGR DATE	ECO	PWR

THIS DRAWING CREATED BY ENGINEERING CHANGE ORDER (ECO): 11834 PWR: N/A

DFTR: J.M.NEVAREZ 7/18/07
CHKR: B.DAY FOR RAJ 8/9/07
COG: ANTHONY DONNER 8/9/07
CM: TODD SELLMER 8/13/07
QA: BRUCE G. FAULK 8/13/07
SFTY: N/A
APPD: N/A
APPD: N/A
DM: BOB BEEMAN 8/13/07
DOE: N/A
CAD SOURCE: PRO/ENGINEER

U.S. DEPARTMENT OF ENERGY

Washington TRU Solutions LLC

Waste Isolation Pilot Plant — Carlsbad, NM

TITLE: SHIELDED CONTAINER ASSEMBLY

SIZE: D | SYS: PT03 | DWG NO: 165-F-026-WI | REV: B

SCALE: 1:4 — INTERPRET DWG PER ANSI Y14

THIS DRAWING TAKEN FROM: N/A
VENDOR: N/A

DIM. IN INCHES U.N.O.
[ ] DENOTES mm U.N.O.
UNLESS OTHERWISE SPECIFIED TOLERANCES

2 PL DEC	3 PL DEC	ANGLES	125
±.03	±.010	±.5°	✓

FRACTIONS: ±1/16

INDEX CODE NUMBER				
SYSTEM	WBE	DWG TYPE	CL	VENDOR
PT03	165	01300	44	240

165-F-026-W2

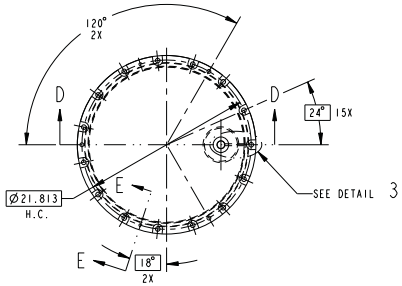

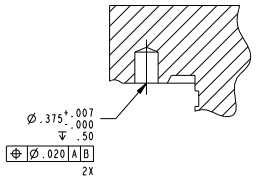

SECTION E-E
SCALE 1:1

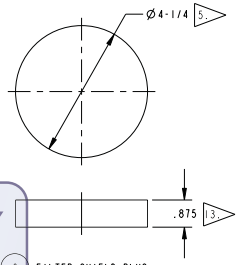

9 FILTER SHIELD PLUG
SCALE 1:2

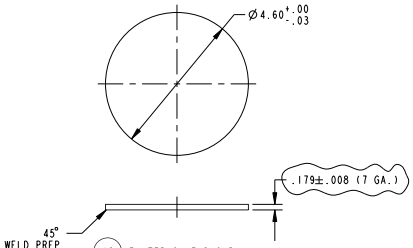

10 FILTER SHIELD CAP
SCALE 1:2

INFORMATION ONLY

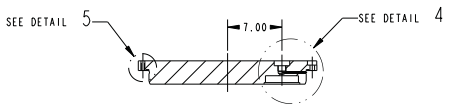

SECTION D-D
SCALE 1:8

6 LID

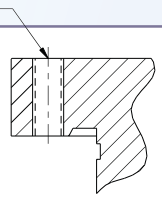

DETAIL 5
SCALE 1:1

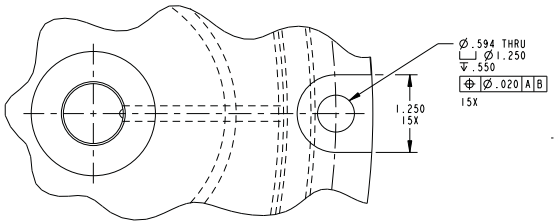

DETAIL 3
SCALE 1:1

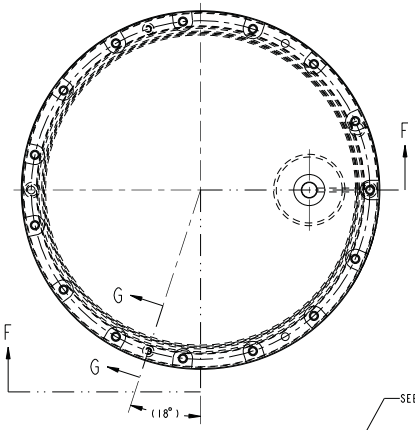

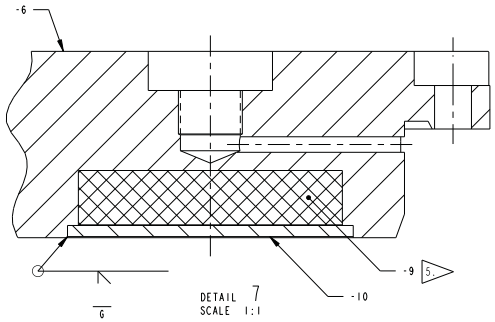

DETAIL 7
SCALE 1:1

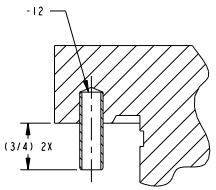

SECTION G-G
SCALE 1:1

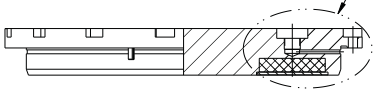

SECTION F-F
LID ASSEMBLY

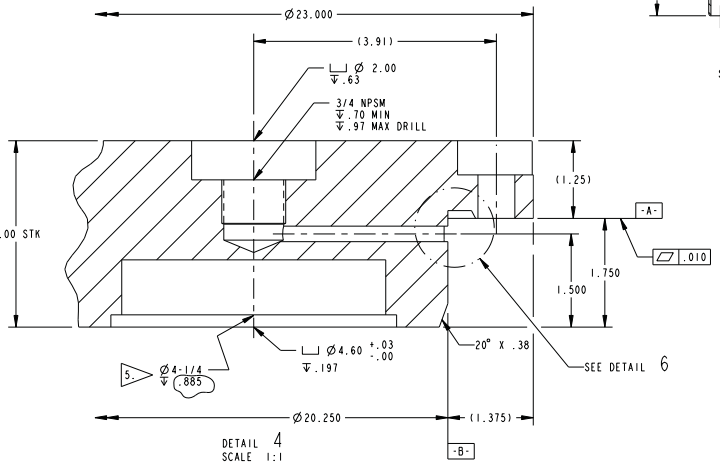

DETAIL 4
SCALE 1:1

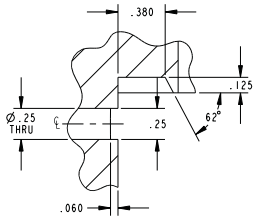

DETAIL 6
SCALE 2:1

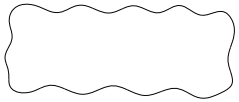

NOTES

CONTINUES ON SHT. 3

15. TIGHTEN CAP SCREWS (ITEM 15) TO 85±10 LB-FT TORQUE DURING FINAL ASSEMBLY.

16. SEAL (ITEM 7) SHALL BE ONE-PIECE CONSTRUCTION AND INSTALLED WITHOUT STRETCHING.

17. FABRICATION OPTION: CHAMFER 60° X .130 (FROM HORIZONTAL) LEAD-IN TO AID IN ASSEMBLY.

18. CAUTION: FOR USE OF THREADED LIFT INTERFACE HOLES IN THE LID, ENSURE THREADED FASTENERS OF LIFT ATTACHMENT DO NOT PROTRUDE BEYOND THE BOTTOM FACE OF THE LID FLANGE DURING ASSEMBLY.

19. RESTRAINED OR PI-TAPE MEASUREMENT PERMITTED FOR VERIFICATION.

REV	ISSUE DESCRIPTION	DFTR	CHKR	COG	DFTG MGR	ECO	PWR
		DATE	DATE	DATE	DATE		
B	REVISED PER ADD. #2	JMN 6/12/08	BAD 6/12/08	TD 6/12/08	BB 6/16/08	11834	N/A
A	REVISED PER ADD. #1	JMN 9/13/07	BAD 9/14/07	TD 9/14/07	BB 9/14/07	11834	N/A

THIS DRAWING CREATED BY ENGINEERING CHANGE ORDER (ECO): 11834 PWR: N/A

DFTR: J.M.NEVAREZ 7/18/07
CHKR: B.DAY FOR RAJ 8/9/07
COG: ANTHONY DONNER 8/9/07
CM: TODD SELLMER 8/13/07
QA: BRUCE G. FAULK 8/13/07
SFTY: N/A
APPD: N/A
APPD: N/A
DM: BOB BEEMAN 8/13/07
DOE: N/A
CAD SOURCE PRO/ENGINEER

U.S. DEPARTMENT OF ENERGY

Washington TRU Solutions LLC

Waste Isolation Pilot Plant — Carlsbad, NM

TITLE

SHIELDED CONTAINER ASSEMBLY
LID

SIZE	SYS.	DWG NO	REV
D	PT03	165-F-026-W2	B

SCALE: 1:4 — INTERPRET DWG PER ANSI Y14

THIS DRAWING TAKEN FROM: N/A
VENDOR: N/A

DIM. IN INCHES U.N.O.
[ ] DENOTES mm U.N.O.
UNLESS OTHERWISE SPECIFIED TOLERANCES

2 PL DEC	3 PL DEC	ANGLES	125
±.03	±.010	±.5°	✓

FRACTIONS: ±1/16

INDEX CODE NUMBER				
SYSTEM	WBE	DWG TYPE	CL	VENDOR
PT03	165	01300	44	240

165-F-026-W3

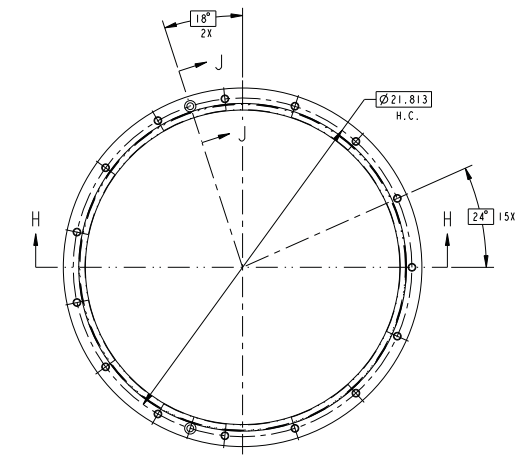

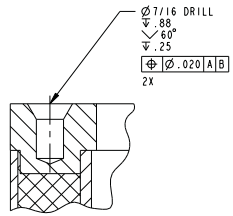

SECTION J-J
SCALE 1:1

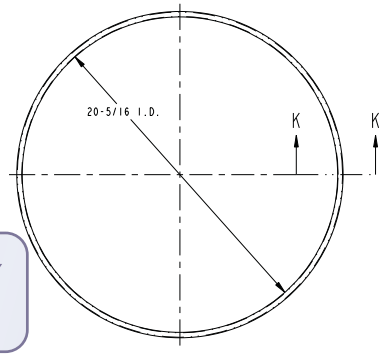

16 7 SEAL
SCALE 1:4

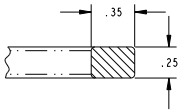

SECTION K-K
SCALE 2:1

INFORMATION ONLY

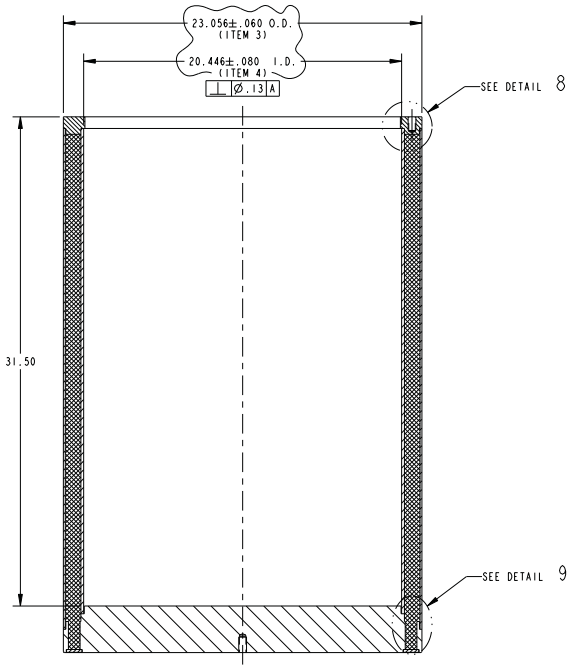

SECTION H-H
BODY, (POST-LEAD POUR)

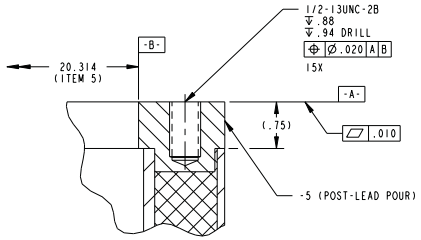

DETAIL 8
SCALE 1:1

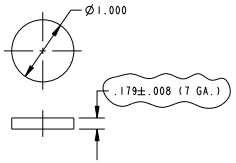

11 PLUG
SCALE 1:1

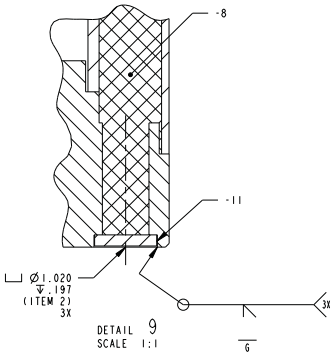

DETAIL 9
SCALE 1:1

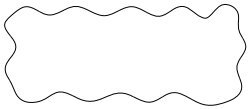

NOTES

20. SEAM WELD APPLICABLE TO ROLLED AND WELDED PLATE ONLY.

21. ASTM B29. OPTIONALLY UTILIZE RADIOACTIVELY-CONTAMINATED (RECYCLED) LEAD MEETING THE MINIMUM STRUCTURAL REQUIREMENTS OF ASTM B29.

22. OPTIONAL: CONICAL TAPER CUP DESIGN OR USE OF BELL REDUCER(S) ARE ALLOWED IN LIEU OF CYLINDRICAL CUP CONFIGURATION AS SHOWN.

23. MARK AS SHOWN USING 1/2 IN. MIN. HIGH CHARACTERS, RAISED OR INDENTED BY FORGING OR DIE-STAMPING INTO THE SURFACE. UNIQUE 6-DIGIT SERIAL NUMBER SHALL BE MATCHED TO BODY AND LID ASSEMBLY. BODY OPTION: WELD-ON STAMPED TAG OR STENCIL WITH HIGH VISIBILITY PAINT.

REV	ISSUE DESCRIPTION	DFTR / DATE	CHKR / DATE	COG / DATE	DFTG MGR / DATE	ECO	PWR
B	REVISED PER ADD. #2	JMN 6/12/08	BAD 6/12/08	TD 6/12/08	BB 6/16/08	11834	N/A
A	REVISED PER ADD. #1	JMN 9/13/07	BAD 9/14/07	TD 9/14/07	BB 9/14/07	11834	N/A

THIS DRAWING CREATED BY ENGINEERING CHANGE ORDER (ECO): 11834 PWR: N/A

DFTR: J.M.NEVAREZ 7/18/07
CHKR: B.DAY FOR RAJ 8/9/07
COG: ANTHONY DONNER 8/9/07
CM: TODD SELLMER 8/13/07
QA: BRUCE G. FAULK 8/13/07

U.S. DEPARTMENT OF ENERGY

Washington TRU Solutions LLC

Waste Isolation Pilot Plant — Carlsbad, NM

SFTY: N/A
APPD: N/A
APPD: N/A
DM: BOB BEEMAN 8/13/07
DOE: N/A
CAD SOURCE: PRO/ENGINEER

DIM. IN INCHES U.N.O.
[ ] DENOTES mm U.N.O.
UNLESS OTHERWISE SPECIFIED TOLERANCES
2 PL DEC ±.03 | 3 PL DEC ±.010 | ANGLES ±.5° | 125
FRACTIONS: ±1/16

TITLE: SHIELDED CONTAINER ASSEMBLY BODY (POST-LEAD POUR)

SIZE D | SYS PT03 | DWG NO 165-F-026-W3 | REV B

SCALE: 1:4 — INTERPRET DWG PER ANSI Y14

THIS DRAWING TAKEN FROM: N/A
VENDOR: N/A

INDEX CODE NUMBER				
SYSTEM	WBE	DWG TYPE	CL	VENDOR
PT03	165	01300	44	240

165-F-026-W4

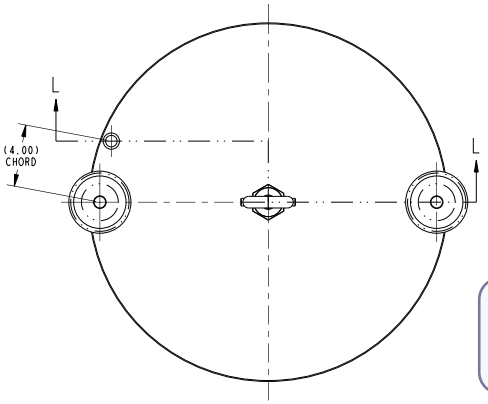

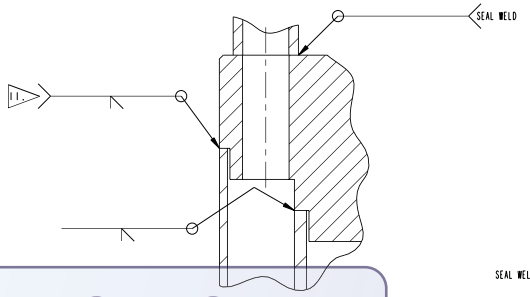

DETAIL 10
SCALE 1:1

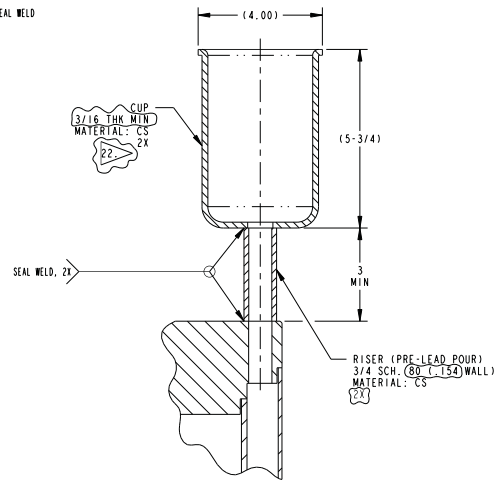

DETAIL 11
SCALE 1:2

INFORMATION ONLY

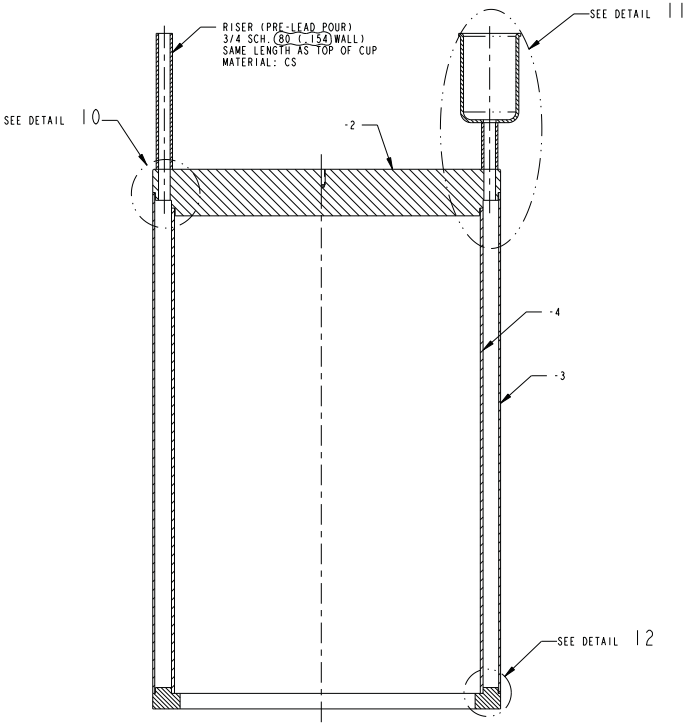

SECTION L-L

7. BODY, (PRE-LEAD POUR)
(HOIST RING REMOVED FOR CLARITY)

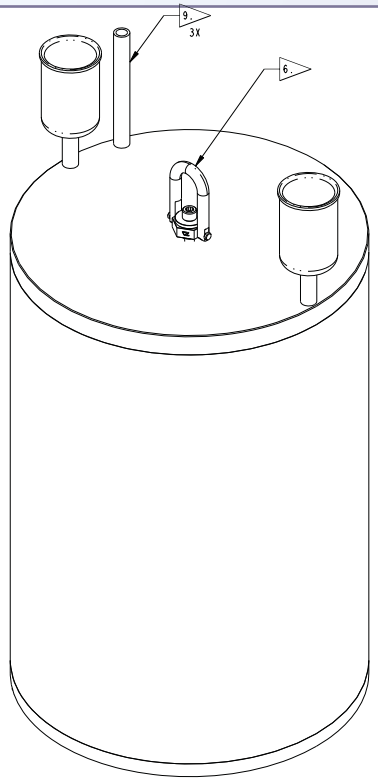

7. REFERENCE VIEW

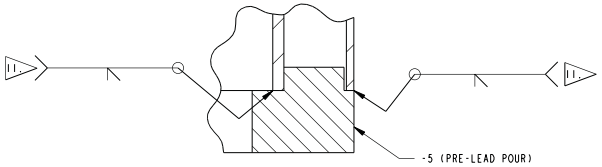

DETAIL 12
SCALE 1:1

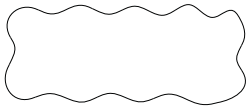

REV	ISSUE DESCRIPTION	DFTR / DATE	CHKR / DATE	COG / DATE	DFTG MGR / DATE	ECO	PWR
B	REVISED PER ADD. #2	JMN 6/12/08	BAD 6/12/08	TD 6/12/08	BB 6/16/08	11834	N/A
A	REVISED PER ADD. #1	JMN 9/13/07	BAD 9/14/07	TD 9/14/07	BB 9/14/07	11834	N/A

THIS DRAWING CREATED BY ENGINEERING CHANGE ORDER (ECO): 11834 PWR: N/A

DFTR: J.M.NEVAREZ 7/18/07
CHKR: B.DAY FOR RAJ 8/9/07
COG: ANTHONY DONNER 8/9/07
CM: TODD SELLMER 8/13/07
QA: BRUCE G. FAULK 8/13/07
SFTY: N/A
APPD: N/A
APPD: N/A
DM: BOB BEEMAN 8/13/07
DOE: N/A
CAD SOURCE PRO/ENGINEER

U.S. DEPARTMENT OF ENERGY

Washington TRU Solutions LLC
Waste Isolation Pilot Plant Carlsbad, NM

TITLE
SHIELDED CONTAINER ASSEMBLY
BODY (PRE-LEAD POUR)

SIZE D | SYS. PT03 | DWG NO 165-F-026-W4 | REV B
SCALE: 1:4 | INTERPRET DWG PER ANSI Y14
THIS DRAWING TAKEN FROM: N/A
VENDOR: N/A

DIM. IN INCHES U.N.O.
[ ] DENOTES mm U.N.O.
UNLESS OTHERWISE SPECIFIED TOLERANCES

2 PL DEC	3 PL DEC	ANGLES	125
±.03	±.010	±.5°	✓

FRACTIONS: ±1/16

INDEX CODE NUMBER				
SYSTEM	WBE	DWG TYPE	CL	VENDOR
PT03	165	01300	44	240

165-F-026-W5

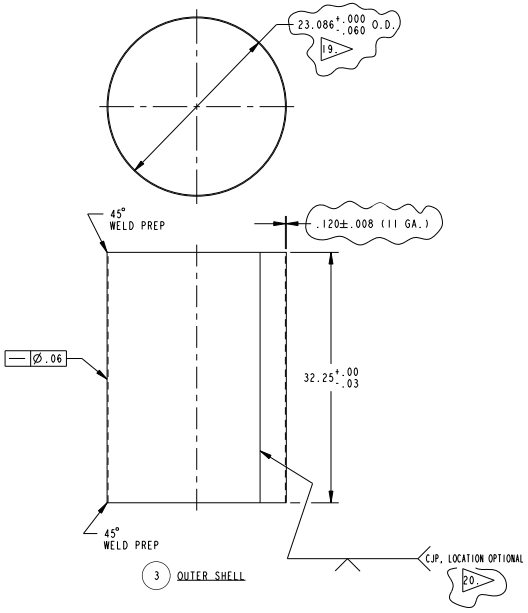

3 OUTER SHELL

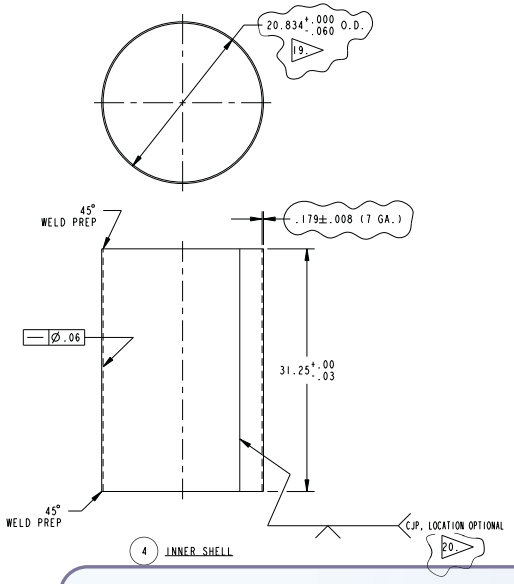

4 INNER SHELL

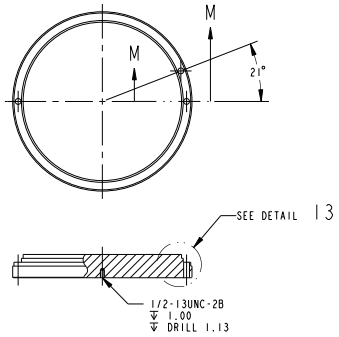

SECTION M-M

2 BASE

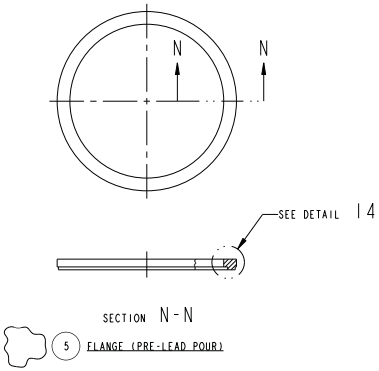

SECTION N-N

5 FLANGE (PRE-LEAD POUR)

INFORMATION ONLY

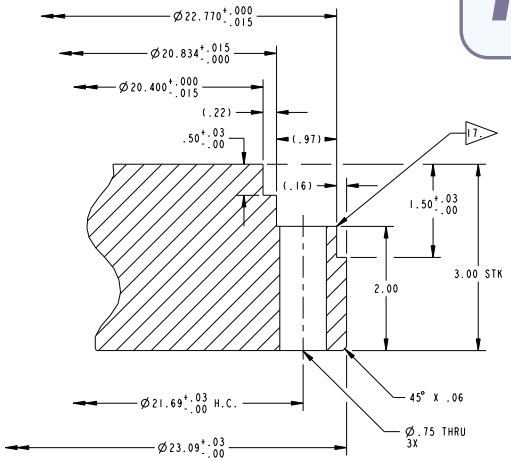

DETAIL 13
SCALE 1:1

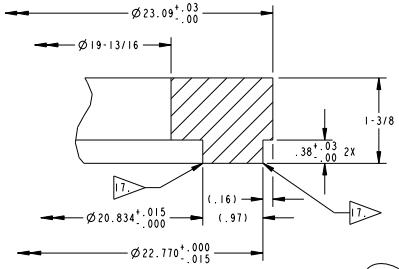

DETAIL 14
SCALE 1:1

INDEX CODE NUMBER				
SYSTEM	WBE	DWG TYPE	CL	VENDOR
PT03	165	01300	44	240

B	REVISED PER ADD. #2	JMN 6/12/08	BAD 6/12/08	TD 6/12/08	BB 6/16/08	11834	N/A
A	REVISED PER ADD. #1	JMN 9/13/07	BAD 9/14/07	TD 9/14/07	BB 9/14/07	11834	N/A
REV	ISSUE DESCRIPTION	DFTR DATE	CHKR DATE	COG DATE	DFTG MGR DATE	ECO	PWR

THIS DRAWING CREATED BY ENGINEERING CHANGE ORDER (ECO): 11834 PWR: N/A

DFTR: J.M.NEVAREZ 7/18/07
CHKR: B.DAY FOR RAJ 8/9/07
COG: ANTHONY DONNER 8/9/07
CM: TODD SELLMER 8/13/07
QA: BRUCE G. FAULK 8/13/07

U.S. DEPARTMENT OF ENERGY

Washington TRU Solutions LLC

Waste Isolation Pilot Plant — Carlsbad, NM

DIM. IN INCHES U.N.O.
[ ] DENOTES mm U.N.O.
UNLESS OTHERWISE SPECIFIED TOLERANCES

2 PL DEC	3 PL DEC	ANGLES	125
±.03	±.010	±.5°	✓

FRACTIONS: ±1/16

SFTY: N/A
APPD: N/A
APPD: N/A
DM: BOB BEEMAN 8/13/07
DOE: N/A
CAD SOURCE: PRO/ENGINEER

TITLE
SHIELDED CONTAINER ASSEMBLY
BODY PARTS (PRE-LEAD POUR)

SIZE D | SYS PT03 | DWG NO 165-F-026-W5 | REV B

SCALE: 1:8 | INTERPRET DWG PER ANSI Y14

THIS DRAWING TAKEN FROM: N/A
VENDOR: N/A