US EPA ARCHIVE DOCUMENT

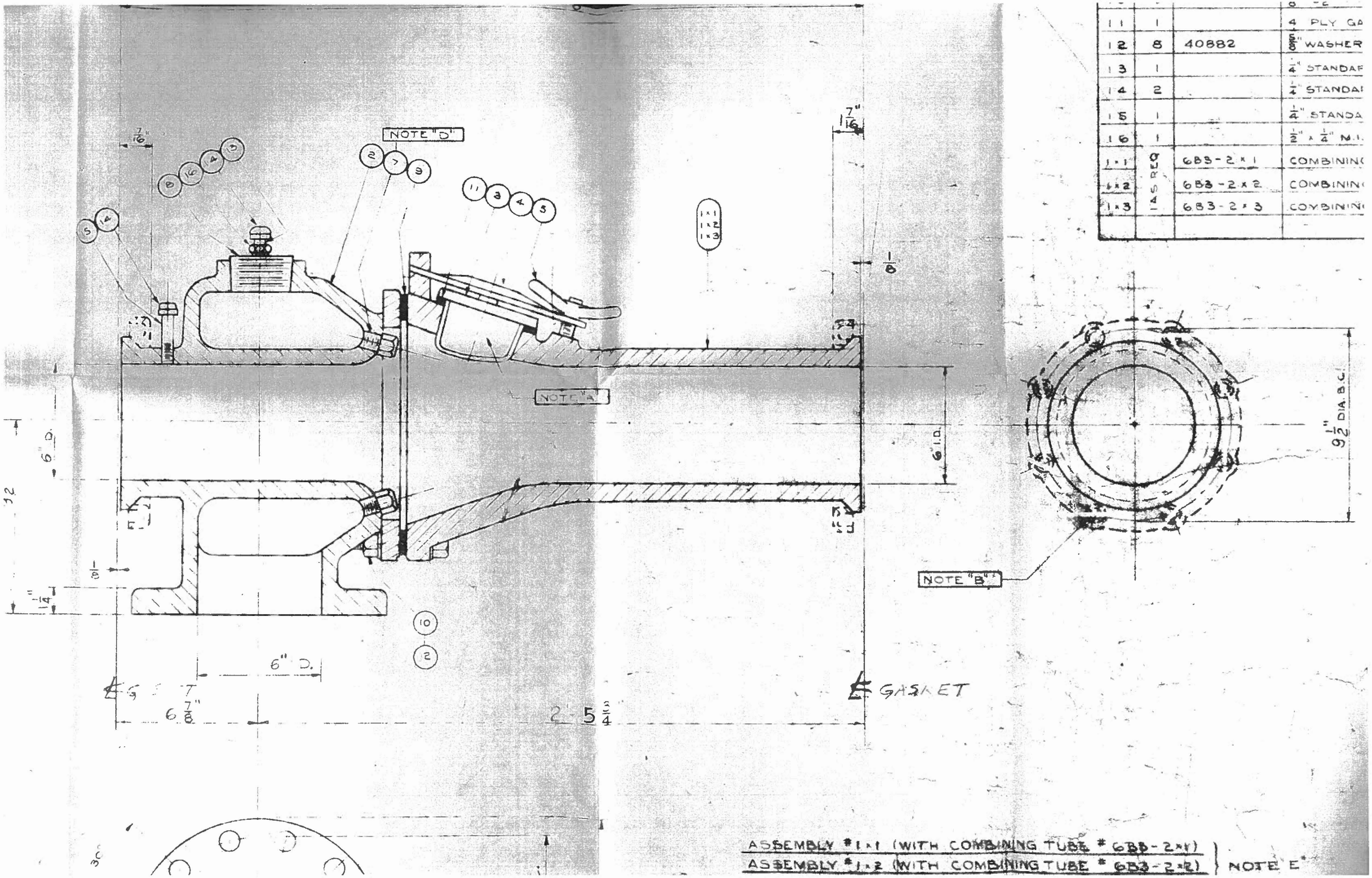

11	1		4 PLY GA
12	8	40882	5/8" WASHER
13	1		1/4" STANDAR
14	2		1/4" STANDAR
15	1		1/4" STANDA
16	1		1/2" × 1/4" M.I.
1×1	1 AS REQ	6B3-2×1	COMBININ
1×2		6B3-2×2	COMBININ
1×3		6B3-2×3	COMBININ

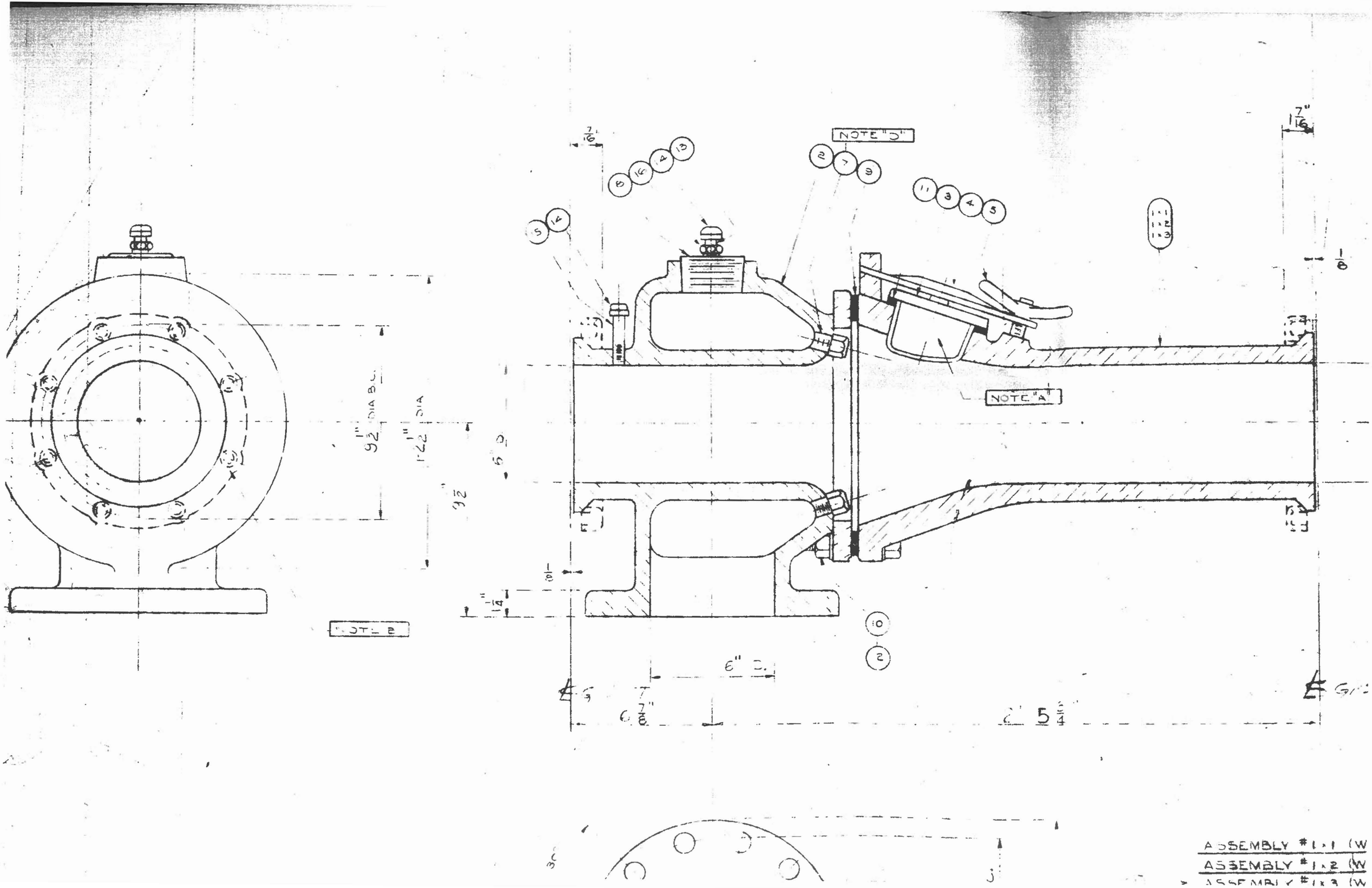
NOTE "D"
NOTE "A"
NOTE B
1x1
1x2
1x3
6" D.
6 7/8"
2' 5 3/4"
ASSEMBLY #1x1 (W
ASSEMBLY #1x2 (W
ASSEMBLY #1x3 (W