US EPA ARCHIVE DOCUMENT

United States Environmental Protection Agency

Office of Enforcement and Compliance Assurance
Washington, DC 20460

EPA 305-B-04-001
February 2004

# Compliance Assistance Tool for Pharmaceutical Production, Pesticide Active Ingredient Production, and Miscellaneous Organic Chemical Manufacturing NESHAP: Comparison of Regulatory Requirements and Case Study Compliance Illustrations for Nondedicated Equipment

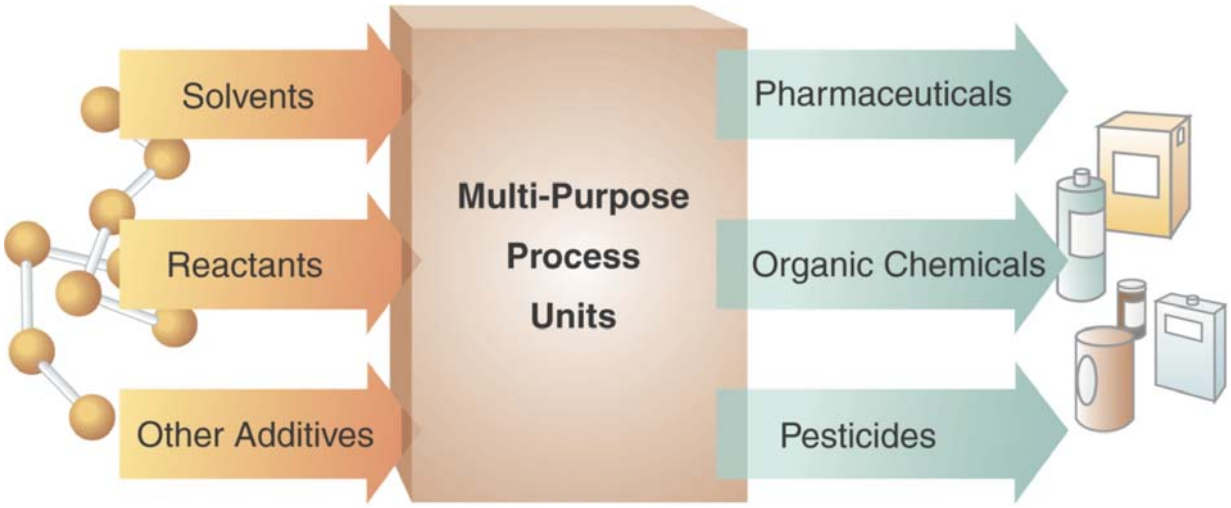


US EPA ARCHIVE DOCUMENT

# Compliance Assistance Tool for Pharmaceutical Production, Pesticide Active Ingredient Production, and Miscellaneous Organic Chemical Manufacturing NESHAP: Comparison of Regulatory Requirements and Case Study Compliance Illustrations for Nondedicated Equipment

February 2004

Office of Enforcement and Compliance Assurance
Office of Compliance
Compliance Assessment and Media Programs Division
Air, Hazardous Waste and Toxics Branch

US EPA ARCHIVE DOCUMENT

## Disclaimer

The statements in this document are intended solely for compliance assistance. It is to be used in conjunction with the regulations, not in place of them. This document is not intended, nor can it be relied on, to create any rights enforceable by any party in litigation with the United States. The U.S. Environmental Protection Agency (EPA) and State officials may decide to follow the guidance provided in this document, or to act in variance with the guidance, based on analysis of specific site circumstances. This guidance may be revised without public notice to reflect possible rule changes and changes in EPA's policy.

Please be aware that the EPA has made its best effort to present an accurate summary of regulatory requirements in the pharmaceutical production, pesticide active ingredient, and miscellaneous organic chemical manufacturing MACT rules. Note, however, that it is not intended to summarize every option and detail of the rules. For example, this document does not describe requirements for new sources that differ from those for existing sources. In addition, in the event that there are typing errors or deviations from the final rules, the final rules stand.

US EPA ARCHIVE DOCUMENT

## Table of Contents


Section — Page

I. Introduction . . . . . 1

II. Background . . . . . 1
- A. Affected Source and Applicability . . . . . 1
  - 1. Pharmaceutical Manufacturing (PhRMA) MACT . . . . . 2
  - 2. Pesticide Active Ingredient (PAI) MACT . . . . . 2
  - 3. Miscellaneous Organic Chemical Manufacturing MACT . . . . . 2
- B. Regulated Emission Points and Control Requirements . . . . . 3
- C. Compliance Demonstration . . . . . 11
- D. Monitoring Requirements . . . . . 11
- E. Reporting and Recordkeeping . . . . . 21
- F. Summary of Specific Provisions for Overlapping Requirements . . . . . 36
  - 1. Consistency with NSPS for storage tanks in 40 CFR part 60, subpart Kb . . . 36
  - 2. Consistency with other MACT standards . . . . . 36
  - 3. Compliance with subparts I, GGG, or MMM . . . . . 36
  - 4. Compliance with subpart FFFF for affected wastewater . . . . . 36
- G. Summary of the Process Unit Group Option . . . . . 36

III. Consolidation Approaches . . . . . 38

Appendix A: Six Case Studies . . . . . A-1


## List of Tables


Table — Page

1 Summary of Process Vent Emission Standards for Existing Sources in the PhRMA, PAI, and MON MACT Rules . . . . . 3
2 Summary of Storage Tank Emission Standards for Existing Sources in the PhRMA, PAI, and MON MACT Rules . . . . . 7
3 Summary of Wastewater Emission Standards for Existing Sources in Subparts GGG, MMM, and FFFF . . . . . 8
4 Summary of Emission Standards for Transfer Operations and Equipment Leaks for Existing Sources Under the PhRMA, PAI, and MON MACT Rules . . . . . 10
5 Comparison of Monitoring Requirements in Subparts GGG, MMM, and FFFF . . . . . 12
6 Comparison of Recordkeeping Requirements in Subparts GGG, MMM, and FFFF . . . . . 21
7 Comparison of Reporting Requirements in Subparts GGG, MMM, and FFFF . . . . . 29
8 Summary of Relevant Overlapping Provisions . . . . . 37
9 Summary of Case Studies . . . . . 39




US EPA ARCHIVE DOCUMENT

## List of Acronyms

| | |
|---|---|
| APCD | air pollution control device |
| BOD | biochemical oxygen demand |
| CAR | consolidated federal air rule |
| CCCD | centralized combustion control device |
| CEMS | continuous emissions monitoring system |
| CFR | Code of Federal Regulations |
| CGMP | current good manufacturing practice |
| $Cl_2$ | chlorine |
| CMS | continuous monitoring system |
| CPMS | continuous parameter monitoring system |
| CVS | closed-vent system |
| DOT | U.S. Department of Transportation |
| EDC | ethylene dichloride |
| EPA | U.S. Environmental Protection Agency |
| HAPs | hazardous air pollutants |
| HCl | hydrogen chloride |
| HF | hydrogen fluoride |
| HON | hazardous organic NESHAP |
| HW | hazardous waste |
| LDAR | Leak Detection and Repair |
| M21 | Method 21 of appendix A of 40 CFR part 60 |
| MACT | Maximum Achievable Control Technology |
| MCPU | miscellaneous organic chemical manufacturing process unit |
| MON | miscellaneous organic NESHAP |
| MTVP | maximum true vapor pressure |
| NESHAP | national emission standards for hazardous air pollutants |
| NOCS | notification of compliance status |
| NSPS | new source performance standards |
| $O_2$ | oxygen |
| P2 | pollution prevention |
| PAI | Pesticide Active Ingredient |
| PhRMA | Pharmaceutical Manufacturing |
| PM | particulate matter |
| PMPU | pharmaceutical manufacturing process unit |
| POD | point of determination |
| PS | performance specifications |
| PSHAP | partially soluble HAP |
| PUG | process unit group |
| QA | quality assurance |
| QC | quality control |
| QIP | quality improvement program |
| RATA | relative accuracy test audit |
| RCRA | Resource Conservation and Recovery Act |



US EPA ARCHIVE DOCUMENT

## List of Acronyms (continued)

| | |
|---|---|
| RMR | required mass removal |
| SHAP | soluble HAP |
| SIC | standard industrial classification |
| $SO_2$ | sulfur dioxide |
| SSM | startup, shutdown, and malfunction |
| SSMP | startup, shutdown, and malfunction plan |
| TOC | total organic compounds |
| TRE | total resource effectiveness |
| TSS | total suspended solids |

## Units of Measure

| | |
|---|---|
| gal | gallons |
| gr/dscf | grains per dry standard cubic feet |
| hr/d | hours per day |
| hr/yr | hours per year |
| kg/hr | kilograms per hour |
| kPa | kilopascals |
| lb/hr | pounds per hour |
| lb/yr | pounds per year |
| lpm | liters per minute |
| $m^3$ | cubic meters |
| Mg/yr | megagrams per year |
| MM | million |
| MW | megawatts |
| ppm | parts per million |
| ppmv | parts per million by volume |
| ppmw | parts per million by weight |
| psia | pounds per square inch absolute |
| s | seconds |
| tpy | tons per year |



US EPA ARCHIVE DOCUMENT

*This page intentionally left blank.*

US EPA ARCHIVE DOCUMENT

US EPA ARCHIVE DOCUMENT

## I. Introduction

Maximum Achievable Control Technology (MACT) standards for the control and reduction of hazardous air pollutants (HAP) are established on a source category basis, typically defined by the product(s) that are produced. Most MACT rules have equipment-based standards, which means the requirements apply to a specific series or train of equipment, even if the equipment is not dedicated to the production of a product in the subject source category. However, the MACT rules for pharmaceuticals production, pesticide active ingredient production, and miscellaneous organic chemical manufacturing (subparts GGG, MMM, and FFFF, respectively, in 40 CFR part 63) are process-based standards. This means each standard applies only when the equipment is used to produce a product in the source category subject to that rule. Specialty chemical manufacturers often produce chemicals in at least two, and sometimes all three, of these source categories. The chemicals also are often produced in nondedicated, multipurpose equipment. As a result, there is the potential for the applicable rule for a given piece of equipment to change when the source switches from the production of one product to another. The overlapping requirements for a particular piece of equipment also potentially complicate compliance demonstrations for the source.

To minimize the burden associated with these overlapping requirements, subparts GGG, MMM, and FFFF were written with provisions that were intended to allow for the consolidation of requirements under one rule. To evaluate the effectiveness of these provisions, the U.S. Environmental Protection Agency (EPA) undertook a project to review the potential for overlap and examine how sources could consolidate applicable requirements while also considering the specialty chemical industry's need to quickly undertake process changes. We examined the potential for overlap by obtaining detailed information on processing from two specialty chemical facilities. Based on the information we obtained, we concluded that the rules as written were generally amenable to consolidation of requirements. This document provides guidance on possible approaches for simplifying and consolidating overlapping requirements.

## II. Background

### A. Affected Source and Applicability

Subparts GGG, MMM, and FFFF of part 63 are summarized below. They are similar in format for requirements and affected sources and only apply to major sources of HAP and only to processes that use, produce, or process HAP. These standards apply to multipurpose chemical processors and have similar applicability and control requirements; if a facility manufactures products that are subject to different MACT standards, there is the potential for equipment to be subject to multiple MACT standards. This raises issues relating to difficulties associated with complying with three standards and the obvious need for simplification, as well as to the potential for facing a multitiered series of compliance strategies that may change as subsequent MACT standards take effect. Applicability of the three standards are described below.

1. Pharmaceutical Manufacturing (PhRMA) MACT

Subpart GGG of part 63, the Pharmaceutical Manufacturing MACT, was promulgated on October 21, 1998. The compliance date of the standard for existing sources was October 21, 2002. The affected source is the collection of units that manufacture pharmaceutical "products," which is defined at §63.1251 as follows:

> Pharmaceutical product means any of the following materials, excluding any material that is a nonreactive solvent, excipient, binder, or filler, or any material that is produced in a chemical manufacturing process unit that is subject to the requirements of 40 CFR part 63, subparts F and G:
>
> (1) Any material described by the standard industrial classification (SIC) code 2833 or 2834; or
> (2) Any material whose manufacturing process is described by North American Industrial Classification System code 325411 or 325412; or
> (3) A finished dosage form of a drug, for example, a tablet, capsule, solution, etc.; or
> (4) Any active ingredient or precursor that is produced at a facility whose primary manufacturing operations are described by SIC code 2833 or 2834; or
> (5) At a facility whose primary operations are not described by SIC code 2833 or 2834, any material whose primary use is as an active ingredient or precursor.

2. Pesticide Active Ingredient (PAI) MACT

Subpart MMM of part 63 , the Pesticide Active Ingredient MACT, was promulgated on June 23, 1999. The compliance date for existing sources is December 23, 2003. The affected source is the collection of units that produce a material that is primarily used as a pesticide active ingredient or integral intermediate. Pesticide active ingredients are substances that are defined under section 2(a) of the Federal Insecticide, Fungicide, and Rodenticide Act. The term "integral intermediates" refers to the production of materials for which 50 percent or more of the annual production is used in the onsite manufacture of any pesticide active ingredients and not "stored" before being used in the production of active ingredients or other integral intermediates. Some processing steps that are conducted prior to the manufacture of the active ingredient may be excluded from the PAI MACT. Additionally, formulation operations are specifically excluded from the PAI affected source.

3. Miscellaneous Organic Chemical Manufacturing MACT

Subpart FFFF of part 63, national emission standards for hazardous air pollutants (NESHAP) for miscellaneous organic chemical manufacturing (commonly referred to as the miscellaneous organic NESHAP [MON]) was promulgated on November 10, 2003. The compliance date for existing sources will be November 10, 2006. The affected source is the collection of units that manufacture a range of miscellaneous organic materials or families of materials that are described by a number of SIC codes as products or isolated intermediates. The MON will generally regulate emission sources in organic chemical manufacturing that are not



US EPA ARCHIVE DOCUMENT

regulated under other MACT standards. Because the MON's compliance date is later than either the PhRMA MACT or the PAI MACT, it will become the "catch all" MACT standard for miscellaneous organic chemical processes that have not been regulated under earlier standards. Therefore, an organic chemical manufacturing process that is not part of a PhRMA or PAI affected source but is located at a major source that uses, produces, or processes HAP will most likely be subject to the MON. The MON will also cover solvent recovery processes and formulation processes that have previously been excluded from other MACT standards, such as the hazardous organic NESHAP (HON) (which excluded batch vents and sources with only HAP solvent emissions from its affected source) and the PAI MACT (which specifically excludes formulation operations).

B. Regulated Emission Points and Control Requirements

Tables 1 through 4 summarize requirements for emission points that are relevant to this discussion. The summary is limited to existing source standards. There are additional differences for new source standards, but for simplicity, we have chosen not to discuss new source standards because any conclusions drawn from the analysis for existing sources will generally also apply to the new source standards. This listing does not represent a comprehensive summary, but a summary of substantive control requirements. The formats of the requirements are very similar. A major difference between the three rules is the applicability thresholds for control of process vents, wastewater, and storage tanks, such that emission sources may require controls under one standard and not under another. Control requirements vary only slightly in stringency among the three standards.

**Table 1. Summary of Process Vent Emission Standards for Existing Sources in the PhRMA, PAI, and MON MACT Rules**

| | Subpart GGG (PhRMA MACT) | Subpart MMM (PAI MACT) | Subpart FFFF (MON) | |
|---|---|---|---|---|
| | | | Batch | Continuous |
| **Process Vents With Organic HAP Emissions** | | | | |
| Threshold for control | >0.90 Mg/yr total HAP before control from process, >1.80 Mg/yr total HAP before control from facility [§63.1254(a)(2)] | >0.15 Mg/yr before control from process [§63.1362(b)(2)(i)] | >10,000 lb/yr before control from process [Table 2 and Definitions] | Vents with TRE indices <5.0 [Table 1 and Definitions] |



US EPA ARCHIVE DOCUMENT

**Table 1. Summary of Process Vent Emission Standards for Existing Sources in the PhRMA, PAI, and MON MACT Rules (continued)**

| | Subpart GGG (PhRMA MACT) | Subpart MMM (PAI MACT) | Subpart FFFF (MON) | |
|---|---|---|---|---|
| | | | Batch | Continuous |
| Control Requirement | Reduce total HAP emissions to ≤0.90 Mg/yr per process, up to 1.8 Mg per facility [§63.1254(a)(2)] | Not applicable | Not applicable | Maintain TRE >1.9 with recovery device [Table 1] |
| | • Reduce total HAP per process by ≥93% except reduce total HAP by ≥98% for any large vent(s). [§63.1254(a)(1)(i) and (3)(i)]<br>• Any vents within the process may be excluded from the percent reduction requirement if they are controlled<br>• To ≤20 ppmv as TOC and ≤20 ppmv as hydrogen halide and halogen, or<br>• Using a flare, boiler, process heater, or RCRA device, or<br>• Using the alternative standard [63.1254(a)(1)(ii), (3)(i), and (c)] | • Reduce organic HAP per process by ≥90% except reduce organic HAP by ≥98% for any large vent(s) [§63.1362(b)(2)(i) and (iii)]<br>• Any vents within the process may be excluded from the percent reduction requirement if they are controlled<br>• To ≤20 ppmv TOC or total organic HAP, or<br>• Using a flare, boiler, process heater, or RCRA device, or<br>• Using the alternative standard [§63.1362(b)(2)(iv), and (b)(6)] | • Reduce collective organic HAP from any group of vents within the process by ≥98% using a control device, or<br>• Reduce collective organic HAP emissions from any group of vents within the process by ≥95%, or<br>• For any vents not controlled to meet either of the percent reduction options, reduce organic HAP emissions<br>• To ≤20 ppmv as TOC or organic HAP, or<br>• Using the alternative standard [Table 2 and §63.2505]<br>• Note that a flare, boiler, process heater or RCRA device meeting conditions specified in §63.987 or 63.988 satisfies the percent reduction or outlet concentration standards. | • Reduce organic HAP emissions<br>• By ≥98%, or<br>• To <20 ppmv, or<br>• Using the alternative standard [Table 1 and §63.2505]<br>• Note that a flare, boiler, process heater, or RCRA device meeting conditions specified in §§63.987 or 63.988 satisfies the percent reduction or outlet concentration standard. |

US EPA ARCHIVE DOCUMENT

**Table 1. Summary of Process Vent Emission Standards for Existing Sources in the PhRMA, PAI, and MON MACT Rules (continued)**

| | Subpart GGG (PhRMA MACT) | Subpart MMM (PAI MACT) | Subpart FFFF (MON) | |
|---|---|---|---|---|
| | | | Batch | Continuous |
| **Additional Requirements for Halogenated Streams** | | | | |
| Threshold for control | If combustion device is used for control | Uncontrolled HCl and $Cl_2$, including emissions of these HAP generated by combustion controls, >6.8 Mg/yr/process [§63.1363(b)(3)(i)] | Group 1 batch or continuous halogenated streams for which a combustion control device is used to control organic HAP emissions [Definitions and Tables 1 and 2] | |
| Control Requirement | Reduce hydrogen halides and halogens by 95% or to a concentration ≤20 ppmv after combustion control, or reduce halogen atom content to ≤20 ppmv prior to combustion [§63.1252(g)] | Reduce sum of HCl and $Cl_2$ by ≥94% or to ≤20 ppmv [§63.1362(b)(3)(ii)] | • Reduce hydrogen halides and halogens after the combustion device by ≥99%, to ≤0.45 kg/hr, or to ≤20 ppmv, or<br>• Reduce halogen atom mass emission rate before the combustion device to ≤0.45 kg/hr or ≤20 ppmv device<br>[Tables 1 and 2] | |
| **Hydrogen halides and halogens** | | | | |
| Threshold for Control | The requirements are included with other process vent emissions because the rule specifies requirements only for total HAP [§63.1254(a)] | Same as for halogenated vent streams | >1,000 lb/yr HCl, HF, and $Cl_2$ uncontrolled per process [Table 3] | |
| Control Requirement | | • Same as for halogenated vent streams, or<br>• Alternative standard [§63.1362(b)(6)] | • Reduce sum of emissions by ≥99% or to ≤20 ppmv [Table 3], or<br>• Alternative concentration standard requiring continuous emissions monitoring system (CEMS) [§63.2505] | |
| **Hydrogenation Vents** | | | | |
| Threshold for Control | Hydrogenation vents that are "large vents" [§63.1254 (a)(3)(ii)(C)] | Not applicable | Not applicable | Not applicable |
| Control Requirement | 95% overall control [§63.1254(a)(3)(ii)(C)] | Not applicable | Not applicable | Not applicable |



US EPA ARCHIVE DOCUMENT

**Table 1. Summary of Process Vent Emission Standards for Existing Sources in the PhRMA, PAI, and MON MACT Rules (continued)**

| | Subpart GGG (PhRMA MACT) | Subpart MMM (PAI MACT) | Subpart FFFF (MON) | |
|---|---|---|---|---|
| | | | Batch | Continuous |
| **PM HAP Vents** | | | | |
| Threshold for Control | Included with other process vent emissions because the rule specifies requirements only for total HAP [§63.1254(a)] | For bag dumps and product dryers drying a PAI or integral intermediate [§63.1363(e)] | Not applicable for existing sources | Not applicable for existing sources |
| Control Requirement | | Reduce PM HAP to ≤0.01 gr/dscf [§63.1363(e)] | Not applicable | |



US EPA ARCHIVE DOCUMENT

**Table 2. Summary of Storage Tank Emission Standards for Existing Sources in the PhRMA, PAI, and MON MACT Rules**

| | Subpart GGG (PhRMA MACT) | Subpart MMM (PAI MACT) | Subpart FFFF (MON) |
|---|---|---|---|
| Threshold for control | MTVP ≥13.1 kPa: ≥38 $m^3$ design capacity (cap) [§63.1253(a)] | MTVP ≥3.45 kPa: ≥75 $m^3$ design capacity (cap) [Definitions] | MTVP ≥6.9 kPa and capacity ≥10,000 gallons [Definitions] |
| Control Requirement | • 90% for cap <75 $m^3$;<br>• 95% for cap ≥75 $m^3$;<br>• 20 ppmv outlet; or<br>• floating roof [§63.1253(b) and (c)] | • 95%;<br>• 20 ppmv outlet; or<br>• floating roof [§63.1362(c)] | • 95%;<br>• 20 ppmv outlet; or<br>• floating roof (only if MTVP <76.6 kPa) [Table 4] |
| | Alternative concentration standard requiring CEMS [§63.1253 (d)] | Alternative concentration standard requiring CEMS [§63.1362(b)(6)] | Alternative concentration standard requiring CEMS [§63.2505] |
| | Enclosed combustion with 0.5 s residence time and ≥760°C [§63.1263((b)(3) and (c)(3)] | Not applicable | Return to process or fuel gas system [Table 4] |
| | Flare, boiler, process heater, RCRA unit [§63.1263((b)(4 and 5) and (c)(4 and 5)] | Flare, boiler, process heater, RCRA unit [§63.1362(c)] | Flare, boiler, process heater, RCRA unit [Flares are specifically listed in Table 4; requirements for other devices are specified in §63.985, which is referenced from §63.2450(d)] |
| | Vapor balancing [§63.1253(f)] | Vapor balancing [§63.1362(c)] | Vapor balancing [§63.2470(e)] |



US EPA ARCHIVE DOCUMENT

**Table 3. Summary of Wastewater Emission Standards for Existing Sources in Subparts GGG, MMM, and FFFF**

| | Subpart GGG (PhRMA MACT) | Subpart MMM (PAI MACT) | Subpart FFFF (MON) |
|---|---|---|---|
| Threshold for control | Each POD with<br>• ≥1,300 ppmw and ≥0.25 Mg/yr partially soluble HAP (PSHAP) load from the PMPU;<br>• ≥5,200 ppmv and ≥0.25 Mg/yr total PSHAP and soluble HAP (SHAP) load; or<br>• ≥10,000 ppmw and ≥1 Mg/yr facility HAP load<br>[§63.1256(a)(1)(i)] | Each POD with HON Group 1 criteria<br>• ≥10 lpm and ≥1,000 ppmw for all compounds listed in Table 9 of the HON; or<br>• ≥10,000 ppmw at any flowrate<br>[Definitions] | Each POD with<br>• ≥1 lpm and ≥1,000 ppmw combined PSHAP and SHAP,<br>• ≥30,000 ppmw and ≥1 tpy SHAP load, or<br>• ≥10,000 ppmw total PSHAP and SHAP at any flowrate<br>[§63.2485(c)] |
| **Wastewater treatment requirements** | | | |
| Nonbiological treatment options | • For wastewater that contains PSHAP: treat to <50 ppmw or remove ≥99%; [§63.1256(g)(8)]<br>• For wastewater that contains SHAP: treat to <520 ppmw or remove ≥90% [§63.1256(g)(9)] | Rule references subpart G of the HON:<br>• Design steam stripper [§63.138(d)];<br>• Reduce mass flow rate of Group 1 by ≥99% or by Fr;[§63.138(e)]<br>• Treat to ≤50 ppmw outlet [§63.138(b)] or achieve RMR [§63.138(f)] | Same as subpart MMM |
| Biological treatment options | • Enhanced biotreatment for SHAP if wastewater contains <50 ppmw PSHAP [§63.1256(g)(10)]<br>• ≥95% overall control of all PSHAP and SHAP sent to biological treatment [§63.1256(g)(11)]<br>• ≥99% control of PSHAP and ≥90% control of SHAP in affected wastewater [§63.1256(g)(8) and (9)] | • Enhanced biotreatment [§63.145(h)(1)] if 99% of HAP are on List 1 of Table 36 of HON<br>• ≥95% of all compounds listed in Table 9 of the HON that are sent to biological treatment [§63.138(g)]<br>• Achieve RMR for Group 1 wastewater [§63.138(f)] | Same as subpart MMM |
| Other treatment options | • Offsite treatment or onsite treatment not owned by source [§63.1256(a)(5)];<br>• Treatment in RCRA Unit [§63.1256(g)(13)] | • Offsite treatment or onsite treatment not owned by source [§63.1362(d) references §63.132])<br>• Treatment in RCRA Unit [§63.1362(d) references §63.138(h)]] | • Offsite treatment or onsite treatment not owned by source; [§§63.132 and 63.2485(i)]<br>• Treatment in RCRA Unit [§63.138(h)] |



US EPA ARCHIVE DOCUMENT

**Table 3. Summary of Wastewater Emission Standards for Existing Sources in Subparts GGG, MMM, and FFFF (continued)**

| | Subpart GGG (PhRMA MACT) | Subpart MMM (PAI MACT) | Subpart FFFF (MON) |
|---|---|---|---|
| **Emission suppression requirements for waste management units** | | | |
| Wastewater tanks | • Use a fixed roof if contents are not heated, treated by exothermic reaction, or sparged<br>• If contents are heated, treated by exothermic reaction, or sparged, generally also must vent emissions through CVS to control or use floating roof. However, if the heating, exothermic reaction, or sparging increases the emissions by <5%, then a fixed roof alone is sufficient<br>[§63.1256(b)(1) and (2)] | Comply with subpart G<br>• Use fixed roof if contents are not heated, treated with exothermic reaction, or sparged;<br>• Otherwise:<br>- vent emissions through CVS to control, or<br>- use floating roof<br>[§63.133] | Same as subpart GGG [§§63.2485(d)(3) and 63.133] |
| Surface impoundments and oil-water separators | Vent emissions through a CVS to control, or install a floating membrane/roof. [§63.1256(c) and (f)] | Same as subpart GGG [§63.1362(d) references §§63.134 and 63.137] | Same as subpart GGG [Table 7 to subpart FFFF references §§63.134 and 63.137] |
| Containers | Vent emissions from containers >0.42 $m^3$ through CVS to control [§63.1256(d)] | Same as subpart GGG [§63.1362 references §63.135] | Same as subpart GGG [Table 7 to subpart FFFF references §63.135] |
| Drains | Vent emissions through CVS to control [§63.1256(e)] | Same as subpart GGG [§63.1362 references §63.136] | Same as subpart GGG [Table 7 to subpart FFFF references §63.136] |
| | Junction boxes and sewer lines can be vented if equipped with water seals [§63.1256 (e)(2)(iii)] | Not applicable | Same as subpart GGG [§63.2485(e)(1)] |
| Options for offsite waste management units prior to biological treatment | Not required to cover waste management units up to the activated sludge unit if wastewater contains less than 50 ppmw PSHAP, and the SHAP losses are < 5% prior to the activated sludge unit [§63.1256(a)(5)(D)(*3*) and (*4*)] | Same as subpart GGG [§63.1362(d)(14)] | Same as subpart GGG [§63.2485(i)(2)] |



US EPA ARCHIVE DOCUMENT

**Table 3. Summary of Wastewater Emission Standards for Existing Sources in Subparts GGG, MMM, and FFFF (continued)**

| | Subpart GGG (PhRMA MACT) | Subpart MMM (PAI MACT) | Subpart FFFF (MON) |
|---|---|---|---|
| **Requirements for scrubber effluent** | | | |
| | Scrubber effluent is an affected wastewater stream if it is discharged from a scrubber that is used to control PSHAP from process vents [§63.1256(a)(1)(iii)] | Scrubber effluent is included in the definition of wastewater | None specified |

**Table 4. Summary of Emission Standards for Transfer Operations and Equipment Leaks for Existing Sources Under the PhRMA, PAI, and MON MACT Rules**

| Emission Point | Subpart GGG (PhRMA MACT) | Subpart MMM (PAI MACT) | Subpart FFFF (MON) |
|---|---|---|---|
| **Transfer Operations** | | | |
| Threshold for control | Not Applicable | Not Applicable | Loading rack for trucks or tank cars >0.65 MM liters per year; and material with ≥10.3 kPa [Definitions] |
| Control Requirements | Not Applicable | Not Applicable | 98% or to ≤20 ppmv overall [Table 5] |
| | | | CVS to flare or fuel gas system [Table 5] |
| | | | Vapor balance [§63.2475] |
| **Equipment Leaks** | | | |
| Threshold for control | >300 hours/yr in HAP service | >300 hours/yr in HAP service | >300 hours/yr in HAP service |
| Control Requirements | • Subpart GGG LDAR, or<br>• Comply with subpart H<br>[§63.1250(h)(4)] | • Subpart MMM LDAR, or<br>• Comply with subpart H<br>[§63.1260(i)(4)] | • Subpart TT or UU if process has no continuous vents;<br>• Subpart UU for processes with at least one continuous vent;<br>• Part 65 subpart F (the CAR) for any process; or<br>• Comply with GGG, H, or MMM, if other equipment is already subject to one of these rules<br>[§63.2535(d) and Table 6 to Subpart FFFF] |



US EPA ARCHIVE DOCUMENT

C. Compliance Demonstration

Each of the rules also addresses the concept that emission control devices must be demonstrated to be capable of achieving required control efficiencies under all processing conditions. When a wide variation in emission stream characteristics is expected during the course of batch operations, the intent of each of the rules is to require that a compliance demonstration be conducted over the most challenging set of conditions that will be encountered during operations; for equipment that is multipurpose, we expect that operators may be less likely to have to conduct additional compliance testing to demonstrate compliance with all three rules if they have developed a proper worst-case compliance demonstration that encompasses the range of conditions expected to occur. The initial compliance demonstration provisions provide two options for conducting a worst-case demonstration: (1) absolute, which is based on actual operations, or (2) hypothetical, based on simulated conditions. Both options require the owner or operator to determine the set of conditions that would present the greatest challenge to achieving the required control efficiency. The rules offer some options for selecting these challenging conditions, such as defined periods of highest possible combined HAP and volatile organic compound load to the control device, or defining periods where HAP constituents will not generally be amenable to control for the abatement technology, such as constituents that approach limits of solubility for scrubbing media or constituents that approach the limits of adsorptivity for adsorption systems. The general concept behind the use of the worst-case conditions is to ensure that control devices will be able to achieve the required control over a range of conditions. Having one compliance demonstration cover three standards also facilitates consistent operating parameter monitoring, simplifying a consolidation effort.

D. Monitoring Requirements

Monitoring requirements for all three standards have many similarities. Each standard requires monitoring of devices that control HAP emissions of less than 1 ton per year of emissions and continuous (15-minute) monitoring of devices controlling HAP emissions of greater than 1 ton per year. Monitoring consists of either parameter monitoring that is linked to the initial compliance demonstration or direct monitoring of outlet concentration using continuous emission monitors. A comparison of monitoring and inspection requirements in subparts GGG, MMM, and FFFF is presented in Table 5.



US EPA ARCHIVE DOCUMENT

**Table 5. Comparison of Monitoring Requirements in Subparts GGG, MMM, and FFFF**

| Parameter | Requirements | | |
|---|---|---|---|
| | **Subpart GGG (PhRMA MACT)** | **Subpart MMM (PAI MACT)** | **Subpart FFFF (MON)** |
| Monitoring required if APCD has inlet HAP load <1 tpy | Daily verification [§63.1258(b)(1)(i)] | Same as subpart GGG [§63.1366(b)(1)(i)] | Same as subpart GGG, but only allowed if at least some of the emissions controlled are from batch process vents [§63.2460(c)(5)] |
| Monitoring required if APCD has inlet HAP load ≥1 tpy and is used to comply with any standard except the alternative standard | Continuous monitoring as described below for specific types of APCD | Same as subpart GGG | Same as subpart GGG |
| Scrubber/absorber | • Continuous monitoring of liquid flow or pressure drop<br>• Monitoring once/day of scrubber effluent pH if caustic is used to remove acid emissions<br>[§63.1258(b)(1)(ii)] | Same as subpart GGG [§63.1366(b)(1)(ii)] | For most halogen scrubbers:<br>• Continuous monitoring of scrubber inlet liquid flow<br>• Measure or determine inlet gas flow rate<br>• Continuous monitoring of pH or caustic strength of the scrubber effluent<br>[§§63.994(c) and 63.2450(k)(3)]<br><br>For most absorbers:<br>• Continuously monitor liquid temperature and specific gravity<br>• Continuously monitor organic concentration if specific gravity meets conditions specified in the rule<br>[§§63.990(c) and 63.993(c)]<br><br>If used to control emissions from wastewater, request approval of alternative parameters [§63.143(e)(3)] |
| Condenser | Continuously monitor outlet gas temperature [§63.1258(b)(1)(iii)] | Same as subpart GGG [§63.1366(b)(1)(iii)] | Continuously monitor temperature of condenser outlet (product side) [§§63.990(c), 63.993(c), and 63.143(e)(1)] |



US EPA ARCHIVE DOCUMENT

**Table 5. Comparison of Monitoring Requirements in Subparts GGG, MMM, and FFFF (continued)**

| Parameter | Requirements | | |
|---|---|---|---|
| | **Subpart GGG (PhRMA MACT)** | **Subpart MMM (PAI MACT)** | **Subpart FFFF (MON)** |
| Regenerative carbon adsorber | • Monitor regeneration cycle characteristics (regeneration frequency, temperature to which bed is heated during regeneration, temperature to which bed is cooled within 15 minutes of end of cooling cycle, and regeneration stream flow)<br>• Annual check for bed poisoning<br>[§63.1258(b)(1)(iv)] | Same as subpart GGG [§63.1366(b)(1)(iv)] | For each regeneration cycle:<br>• Monitor total regeneration stream mass or volumetric flow<br>• Monitor carbon bed temperature after each regeneration and within 15 minutes of the end of each cooling cycle<br>• No check for bed poisoning<br>[§§63.990(c), 63.993(c), and 63.143(e)(1)] |
| Nonregenerative carbon adsorber | Monitor time interval between replacement based on conditions anticipated under worst-case conditions [§63.1258(b)(1)(v)] | Same as subpart GGG [§63.1366(b)(1)(v)] | • For applications subject to subpart SS, request approval of planned monitoring [§63.993(c)(4) or §63.995(c)]<br>• If used to control emissions from wastewater, same as subpart GGG or monitor organic concentration [§63.143(e)(1)] |
| Flares | Continuously monitor for presence of pilot flame [§63.1258(b)(1)(vi)] | Same as subpart GGG [§63.1366(b)(1)(vi)] | Same as subpart GGG [§§63.987(c) and 63.143(e)(1)] |
| Thermal incinerator | Continuously monitor temperature of gases exiting the combustion chamber [§63.1258(b)(1)(vii)] | Same as subpart GGG [§63.1366(b)(1)(vii)] | Continuously monitor temperature immediately downstream of the firebox [§§63.988(c)(1) and 63.143(e)(1)] |
| Catalytic incinerator | Continuously monitor temperature of gas stream immediately before and after the catalyst bed, and determine the temperature difference [§63.1258(b)(1)(viii)] | Same as subpart GGG [§63.1366(b)(1)(viii)] | Continuously monitor temperature immediately before and after the catalyst bed, or monitor before the bed and check catalyst activity annually [§§63.988(c)(2), 63.2450(k)(4), and 63.143(e)(1)] |



US EPA ARCHIVE DOCUMENT

**Table 5. Comparison of Monitoring Requirements in Subparts GGG, MMM, and FFFF (continued)**

| Parameter | Requirements | | |
|---|---|---|---|
| | **Subpart GGG (PhRMA MACT)** | **Subpart MMM (PAI MACT)** | **Subpart FFFF (MON)** |
| Process heaters and boilers where vent gases are not introduced with the primary fuel or the design heat input capacity is ≥44 MW | Continuously monitor temperature of gases exiting the combustion chamber [§63.1258(b)(1)(ix)] | Same as subpart GGG [§63.1366(b)(1)(ix)] | Same as subpart GGG [§§63.988(c)(3) and 63.143(e)(1)] |
| Required accuracy of temperature monitoring devices | • For condensers and carbon adsorbers, must be accurate to within ±2 percent of the temperature measured in degrees Celsius or ±2.5°C, whichever is greater [§63.1258(b)(1)(iii) and (iv)]<br>• For combustion devices, must be accurate to within ±0.75 percent of the temperature measured in degrees Celsius or ±2.5°C, whichever is greater [§63.1258(b)(1)(vii) through (ix)] | Same as subpart GGG [§63.1366(b)(1)(vii) through (ix)] | • If monitoring a control device used for any emissions other than from wastewater, must have minimum accuracy of ±1 percent of the temperature being monitored expressed in degrees Celsius or ±1.2°C, whichever is greater [§63.981]<br>• If monitoring a control device used with wastewater emissions, must have a minimum accuracy of ±1 percent of the temperature being monitored expressed in degrees Celsius or ±0.5°C, whichever is greater [§63.111] |
| Required accuracy of flow monitoring devices | • For a scrubber, device must be certified by the manufacturer to be accurate within ±10 percent of the design scrubber liquid flow rate [§63.1258(b)(1)(ii)]<br>• For a carbon adsorber, device must be capable of recording the total regeneration stream flow to within ±10 percent of the established value (i.e., accurate to within ±10 percent of the reading) [§63.1258(b)(1)(iv)] | Same as subpart GGG [§63.1366(b)(1)(ii) and (iv)] | • None specified for scrubbers<br>• For a carbon adsorber, same as subpart GGG [§§63.990(c)(2), 63.993(c)(3), and Table 13 to subpart G] |



US EPA ARCHIVE DOCUMENT

**Table 5. Comparison of Monitoring Requirements in Subparts GGG, MMM, and FFFF (continued)**

| Parameter | Requirements | | |
|---|---|---|---|
| | Subpart GGG (PhRMA MACT) | Subpart MMM (PAI MACT) | Subpart FFFF (MON) |
| Required accuracy of pressure drop monitoring devices | For a scrubber, must be certified by the manufacturer to be accurate to within a gage pressure of ±10 percent of the maximum pressure drop measured [§63.1258(b)(1)(ii)] | Same as subpart GGG [§63.1366(b)(1)(ii)] | None specified |
| Required accuracy of pH monitoring devices | None specified | Same as subpart GGG | Same as subpart GGG |
| Required accuracy of specific gravity monitoring device | None specified | Same as subpart GGG | Must have a minimum accuracy of ±0.02 specific gravity units (§§63.111 and 63.981) |
| Parameter monitoring calibration requirements | Annually [§63.1258(b)(1)(ii), (iii), (iv), (vii), (viii), and (ix)] | Same as subpart GGG [§63.1366(b)(1)(ii), (iii), (iv), (vii), (viii), and (ix)] | Calibrate according to manufacturers specifications or other written procedures that assure accurate operation (§§63.143(g) and 63.996(c)(1)) |
| Centralized combustion control device | • Monitor as described above for the specific type of combustion device<br>• For periods of planned routine maintenance of the CCCD, monitor condenser as described above and monitor pH of scrubber effluent once a day<br>[§63.1258(i)] | Not applicable | Not applicable |
| Fabric filter | Not applicable | Use bag leak detection system as specified in the rule [§63.1366(b)(1)(xi)] | Not applicable for existing sources |
| Data averaging period | • Daily or operating block<br>• Exclude readings taken during periods of no gas flow<br>[§63.1258(b)(2)] | Same as subpart GGG [§63.1366(b)(2)] | Same as subpart GGG [§§63.998(b)(3) and 63.2460(c)(4) and (7)] |



US EPA ARCHIVE DOCUMENT

**Table 5. Comparison of Monitoring Requirements in Subparts GGG, MMM, and FFFF (continued)**

| Parameter | Requirements | | |
|---|---|---|---|
| | **Subpart GGG (PhRMA MACT)** | **Subpart MMM (PAI MACT)** | **Subpart FFFF (MON)** |
| Flow indicators (for gas stream through the APCD) | Required if flow to control device could be intermittent [§63.1258(b)(2)(iii)] | Same as subpart GGG [§63.1366(b)(2)(iii)] | Same as subpart GGG [§63.2460(c)(7)] |
| Procedures for setting APCD parameter limits (i.e., operating limits) | If initial compliance demonstration consists of a performance test:<br>• Base operating limit on average of values from 3 test runs<br>• May supplement test data with engineering assessment and manufacturer's recommendations<br>• May set separate levels for different operating conditions (i.e., for APCD that controls emissions from batch process vents)<br><br>Otherwise set operating limits as part of the design evaluation [§63.1258(b)(3)(i) through (iii)] | Same as subpart GGG [§63.1366(b)(3)(i) through (iii)] | Same as subpart GGG [§§63.999(b)(3) and 63.2460(c)(3)] |



US EPA ARCHIVE DOCUMENT

**Table 5. Comparison of Monitoring Requirements in Subparts GGG, MMM, and FFFF (continued)**

| Parameter | Requirements | | |
|---|---|---|---|
| | **Subpart GGG (PhRMA MACT)** | **Subpart MMM (PAI MACT)** | **Subpart FFFF (MON)** |
| Alternative standard | • TOC CEMS must meet PS 8, 9, or 15 of appendix B of part 60<br>• HCl CEMS must meet PS 15, or you must prepare and submit a monitoring plan for approval<br>• Parameter monitoring instead of CEMS allowed for scrubbers used to control HCl generated in combustion APCDs<br>• Correct concentrations at outlet of control devices for supplemental gases, or implement optional provisions noted below<br>• For combustion device, the option is to maintain temperature and residence time as specified in the rule<br>• For noncombustion device, the option is to implement provisions for "dense gas systems," if applicable<br>[§63.1258(b)(5)] | Same as subpart GGG except:<br>• Rule does not include specifications for $HCl/Cl_2$ CEMS<br>• Must use CEMS to monitor $HCl/Cl_2$ out of scrubber after combustion device (i.e., no parameter monitoring option)<br>• Must correct concentrations for supplemental gases when using noncombustion controls (i.e., no provision for "dense gas systems")<br>[§63.1366(b)(5)] | Same as subpart GGG except:<br>• For any CEMS meeting PS 8, you must also comply with appendix F, procedure 1 of 40 CFR part 60<br>• Concentrations must be corrected for supplemental gases (i.e., the options for combustion devices and dense gas systems in §63.1258(b)(5)(ii) are not included) [§63.2505(b)] |
| Equipment leak monitoring | LDAR monitoring provisions are specified in §63.1255 | LDAR monitoring provisions are specified in §63.1363 (same as §63.1255) | • Table 6 to subpart FFFF references LDAR monitoring provisions in 40 CFR part 63 subpart UU or 40 CFR part 65 subpart F for processes with any continuous process vents<br>• Table 6 to subpart FFFF references LDAR monitoring provisions in 40 CFR part 63 subpart TT or UU or 40 CFR part 65 subpart F for processes without any continuous process vents |



US EPA ARCHIVE DOCUMENT

**Table 5. Comparison of Monitoring Requirements in Subparts GGG, MMM, and FFFF (continued)**

| Parameter | Requirements | | |
|---|---|---|---|
| | **Subpart GGG (PhRMA MACT)** | **Subpart MMM (PAI MACT)** | **Subpart FFFF (MON)** |
| Floating roofs for storage tanks | Rule references the inspection and measurement requirements in §63.120 of the HON [§63.1257(c)(3)] | Same as subpart GGG [§63.1366(d)(3)] | Table 4 to subpart FFFF references the inspection requirements in 40 CFR part 63, subpart WW (slight differences from subpart GGG, but substantively the same) |
| Biological treatment units | Monitor TSS, BOD, and biomass concentration at frequency approved by permitting authority, and use methods approved by permitting authority [§63.1258(g)(2)] | Request approval to monitor appropriate parameters that demonstrate proper operation. Describe the parameter(s), planned methods, and the frequency of monitoring as part of the request [§63.143(c)] | Same as subpart MMM [Table 7 to subpart FFFF references §63.143(c)] |
| Nonbiological treatment units | Request approval to monitor appropriate parameters that demonstrate proper operation [§63.1258(g)(3)] | Same as subpart GGG, except must continuously monitor steam flow rate, wastewater feed temperature, and wastewater mass flowrate for steam strippers [§63.143(b) and (d)] | Same as subpart MMM [Table 7 to subpart FFFF references §63.143(b) and (d)] |
| Waste management unit inspections for improper work practices and control equipment failures | Conduct initial and semiannual visual inspections, measure primary seal gaps once every 5 years (or annually, if there are no secondary seals), and measure secondary seal gaps initially and annually [§63.1258(g)(1)] | Same as subpart GGG [§§63.143(a) and 63.148(b)(3)(ii)] | Same as subpart MMM [Table 7 to subpart FFFF references §§63.143(a) and 63.148(b)(3)(ii)] |
| Bypass lines around APCDs | • Continuously monitor using a flow indicator, or<br>• Install car-seal, and visually inspect monthly<br>[§63.1252(b)] | Same as subpart GGG [§63.1362(j)] | Same as subpart GGG [§63.2450(d) and (e) reference §63.983(a)(3), and Table 7 to subpart FFFF references §63.148(f)] |



US EPA ARCHIVE DOCUMENT

**Table 5. Comparison of Monitoring Requirements in Subparts GGG, MMM, and FFFF (continued)**

| Parameter | Requirements | | |
|---|---|---|---|
| | **Subpart GGG (PhRMA MACT)** | **Subpart MMM (PAI MACT)** | **Subpart FFFF (MON)** |
| Closed vent system and vapor suppression equipment leak inspections | Inspections are consistent with the HON:<br>• Initial M21 inspections for all<br>• Annual visual inspections for hard piping<br>• Annual M21 and visual inspections for ductwork<br>• The rule specifies M21 detection instrument performance criteria, calibration requirements, leak definitions, repair requirements, delay of repair, unsafe-to-inspect and difficult-to-inspect requirements<br>[§63.1258(h)] | Same as subpart GGG except:<br>• Does not specifically state that background levels shall be determined as specified in M21<br>• Does not include a separate repair schedule for leaks in vapor collection systems for transfer operations because the rule does not apply to transfer operations<br>• Limits requirement to inspect unsafe-to-inspect equipment to no more than once per year<br>[§63.1366(h)] | • Table 7 to subpart FFFF references inspection requirements in §63.148 of the HON for closed-vent systems and vapor suppression equipment used with wastewater systems (same requirements as in subpart GGG)<br>• §63.2450(d) and (e) reference inspection requirements in §63.983 of subpart SS for closed-vent systems. Requirements are the same as in subpart GGG except<br>  • Specifies additional calibration gas for instruments that have multiple calibration scales<br>  • Visual indications of a leak are not a leak if M21 is also used and reading is <500 PPM |
| Heat exchange systems | Monitor as specified in §63.104 of the HON except:<br>• Monitoring may be no less frequent than quarterly<br>• If CGMP requirements of 21 CFR part 211 are met, may elect to use physical integrity of the reactor as surrogate indicator of heat exchanger leaks around the reactor<br>[§63.1252(c)] | Monitor as specified in §63.104 of the HON [§63.1362(f) references §63.104] | Same as subpart MMM [Table 10 to subpart FFFF references §63.104] |



US EPA ARCHIVE DOCUMENT

**Table 5. Comparison of Monitoring Requirements in Subparts GGG, MMM, and FFFF (continued)**

| Parameter | Requirements | | |
|---|---|---|---|
| | **Subpart GGG (PhRMA MACT)** | **Subpart MMM (PAI MACT)** | **Subpart FFFF (MON)** |
| Exceedances | • An exceedance means<br>  • Averaged parameter level above maximum or below minimum operating parameter levels<br>  • Loss of all pilot flames in a flare<br>• The rule specifies violations associated with various exceedances<br>[§63.1258(b)(6) and (8)] | Same as subpart GGG except exceedances also include<br>• Each operating day or block for which the time interval before replacement of a non-regenerative carbon adsorber exceeds the interval set during initial compliance<br>• Each instance when a response to a bag leak detector alarm within 1 hour occurs<br>[§63.1366(b)(6) and (8)] | • Subpart FFFF uses the term "deviation," which is defined as<br>  • Any instance when the source fails to meet any obligation established in the rule such as any emission limit, operating limit, or work practice standard, including during periods of SSM<br>  • Any instance when the source fails to meet any term or condition that is adopted to implement an applicable requirement in the rule and that is included in the operating permit<br>• As part of the referenced alternative recordkeeping requirements in subpart SS, the term "excursion" has the same meaning as exceedance in subpart GGG, except it does not apply to flare pilot flames [§63.998(b)(5)(ii) and (6)]<br>• Rule does not specify violations |
| Excursions | • Lack of valid monitoring data for ≥1 hr when control device operates ≤4 hr/d<br>• Lack of valid monitoring data for >25% of control device operating hours if the control devices operates >4 hr/d<br>• Data for each 15-minute period in an hour are needed to have a valid hour of data<br>[§63.1258(b)(7)] | Same as subpart GGG [§63.1366(b)(7)] | Same as subpart GGG except<br>• Two data points in an hour are sufficient to have a valid hour of data for CEMS when the lack of data is due to calibration, QA, or maintenance<br>[§63.999(c)(6)] |



US EPA ARCHIVE DOCUMENT

E. Reporting and Recordkeeping

Comparisons of recordkeeping and reporting requirements are summarized in Tables 6 and 7, respectively.

**Table 6. Comparison of Recordkeeping Requirements in Subparts GGG, MMM, and FFFF**

| Parameter | Recordkeeping requirements | | |
|---|---|---|---|
| | **Subpart GGG (PhRMA MACT)** | **Subpart MMM (PAI MACT)** | **Subpart FFFF (MON)** |
| Recordkeeping requirements in §63.10(b) and (c) of the General Provisions | Table 1 to subpart GGG specifies that §63.10(b)(1), (b)(3), and (c) apply, but §63.10(b)(2) does not. However, all of the provisions in §63.10(b)(2) are included in §63.1259(a) and (b) except<br>• Records associated with a waiver of recordkeeping requirements as specified in §63.10(b)(2)(xii)<br>• Records of emission levels associated with obtaining permission to use an alternative to a RATA for CEMS as specified in §63.10(b)(2)(xiii)<br>• Records of adjustments to CMS | Same as subpart GGG<br>[Table 1 to subpart MMM and §63.1367(a) and (b)] | Table 8 to subpart FFFF specifies that §63.10(b)(1) and (b)(3) apply, and parts of §63.10(b)(2) and (c) apply. Other requirements are specified in subpart SS. Differences relative to the General Provisions are<br>• Records of occurrence and duration of each SSM of process equipment, or each malfunction of APCD or monitoring equipment, required only if excess emissions occur (§63.998(c)(1)(ii)(D) and (d)(3)(i))<br>• Records of actions taken during SSM required only if excess emissions occur (§63.998(c)(1)(ii)(E) and (d)(3)(ii))<br>• For SSM of CPMS, must keep additional record that no excess emissions occurred, if applicable (§63.998(c)(1)(ii)(G))<br>• Keep records of the duration of each period of excess emissions rather than the start and end times (i.e., §63.998(c)(1)(ii) and (d)(3)(i) vs. §63.10(c)(7) and (8)), except when using a CEMS to comply (§63.2525(h))<br>• Records of only certain adjustments to CPMS are specified in §63.998(c)(1)(ii)(B) (vs §63.10(b)(2)(xi))<br>• Records of CMS out-of-control periods apply only to CEMS (no requirement comparable to §63.10(b)(2)(vi) in subpart SS)<br>• Records of nature and cause of CMS malfunction, corrective action or preventive measures adopted, nature of repairs, and procedures that are part of a QC program apply only to CEMS (no provision comparable to §63.10(c)(10, 11, 12, and 14) in subpart SS) |
| SSMP | Prepare, revise, and retain as specified in §63.6(e)(3) | Same as subpart GGG | Same as subpart GGG except:<br>• Group 2 emission points do not need to be included<br>• For equipment leaks, the SSMP must address control devices and optional for other equipment<br>[§63.2525(j)] |



US EPA ARCHIVE DOCUMENT

**Table 6. Comparison of Recordkeeping Requirements in Subparts GGG, MMM, and FFFF (continued)**

| Parameter | Recordkeeping requirements | | |
|---|---|---|---|
| | **Subpart GGG (PhRMA MACT)** | **Subpart MMM (PAI MACT)** | **Subpart FFFF (MON)** |
| Measurement of monitored parameters for control devices and wastewater treatment units | • Keep records of each CEMS or CPMS measurement for control devices and each measurement of approved parameters for treatment units [§63.1259(b)(1)]<br>• Also keep any other records of treatment units required by the Administrator [§63.1258(g)(2) and (3)] | Same as subpart GGG [§§63.1367(b)(1) and 63.147(b)(4), (b)(5), and (d)] | • For treatment units and control devices used to control emissions from waste management units, keep the continuous records of monitored parameters (each value or 15-minute averages) and the daily averages, except keep records of all periods when the pilot flame is absent for flares and regeneration cycle records for carbon adsorbers. Alternatively, may keep only block hourly averages rather than the 15-minute data if daily average is in compliance, or may elect not to calculate average if all data values are in compliance. Also keep any other records required by the Administrator for treatment units [§§63.147(b)(4), (b)(5), and (d) and 63.152(f)]<br>• Follow subpart SS for other APCDs. Six options:<br>(1) keep all continuous records and the daily/block average; or<br>(2) keep 15-minute values or averages and daily/block average; or<br>(3) if CPMS data are collected with automated equipment, calculate hourly averages and discard all but the most recent three hours of valid raw data (if data collected during CPMS breakdown and malfunction are included) and keep daily average; or<br>(4) if all of the recorded values meet the operating limit for a parameter during an averaging period, then may keep a record of this fact along with all of the individual values without calculating a daily/block average; or<br>(5) retain only the daily/block average value if various conditions are met; or<br>(6) keep no records if a period of 6 months passes without an excursion (i.e., an "exceedance" as defined in subpart GGG) [§63.998(b)(1), (b) (3), (b)(5)(i), and (b)(5)(ii)] |



US EPA ARCHIVE DOCUMENT

**Table 6. Comparison of Recordkeeping Requirements in Subparts GGG, MMM, and FFFF (continued)**

| Parameter | Recordkeeping requirements | | |
|---|---|---|---|
| | **Subpart GGG (PhRMA MACT)** | **Subpart MMM (PAI MACT)** | **Subpart FFFF (MON)** |
| (continued from above) | (continued from above) | (continued from above) | • Keep records of the occurrence and cause of periods of operation when the parameter limits are exceeded [§63.998(c)(2)(iii) and (3)(iii) and (d)(5)]<br>- Less comprehensive records required if the control device is used only for equipment leak emissions [§63.998(d)(4)] |
| Records related to process vent standards | If complying with the percent reduction standard, and some APCDs achieve less than 93% control, then keep records of<br>• Standard batch uncontrolled and controlled emissions<br>• Actual emissions/ batch<br>• Record of whether the batch was a standard batch<br>[§63.1259(b)(5)(i)] | For all processes, keep records of<br>• Initial calculation of uncontrolled and controlled emissions per batch (not required if an emissions profile is not required)<br>• Number of batches/yr for processes with batch operations<br>• Number of operating hr/yr for processes with continuous operations<br>[§63.1367(b)(6) (i), (iv), (v), and (ix)] | If complying with the percent reduction standard, and some APCDs achieve less than 98% control, then keep records of:<br>• Whether each batch was a standard batch<br>• The estimated uncontrolled and controlled emissions for each nonstandard batch<br>[§63.2525(d)] |
| Operating scenarios | • Keep copy of each operating scenario<br>• Keep a schedule or log of operating scenarios, updated each time a new operating scenario is put into operation<br>[§63.1259(b)(8) and (c)] | • Keep a schedule or log of operating scenarios, updated each time a new operating scenario is put into operation<br>• No specific requirement to keep records of operating scenarios, but they must be included in the NOCS<br>[§§63.1367(b)(7) and 63.1368(f)(4)] | Same as subpart GGG<br>[§63.2525(b) and (c)] |



US EPA ARCHIVE DOCUMENT

**Table 6. Comparison of Recordkeeping Requirements in Subparts GGG, MMM, and FFFF (continued)**

| Parameter | Recordkeeping requirements | | |
|---|---|---|---|
| | **Subpart GGG (PhRMA MACT)** | **Subpart MMM (PAI MACT)** | **Subpart FFFF (MON)** |
| Inspection of floating roofs for storage tanks | Maintain records of floating roof inspections and seal gap measurements as specified in §63.123(c) through (e) [§63.1259(b)(11)] | Same as subpart GGG [§63.1367(b)(1)] | • §63.1065 of subpart WW is more specific about how to document results of floating roof inspection than §63.123(c) through (e)<br>• Records of seal gap measurements are the same as for subpart GGG<br>• Must keep record of vessel dimensions, capacity, and type of liquid stored (although not a specific recordkeeping requirement in subpart GGG, this information is needed to perform the initial compliance demonstration and would be documented in the NOCS)<br>• Must keep records of floating roof landings<br>• Must keep documentation associated with use of the extension provisions (not in subpart GGG because it does not reference §63.123(g)) |
| Vapor balancing for storage tanks | Maintain records of<br>• The DOT certification<br>• The pressure relief vent setting<br>• Leak detection results<br>[§63.1259(b)(12)] | Same as subpart GGG [§63.1367(b)(8)] | Same as subpart GGG [§63.2525(a) references the applicable recordkeeping requirements in subpart GGG–i.e., requirements in §63.1259(b)(12)] |
| Planned routine maintenance | Keep records (date and time) of periods of planned routine maintenance for<br>• Storage tanks that vent emissions to APCDs<br>• Centralized combustion control devices (CCCDs)<br>[§63.1259(b)(10)] | • Same as subpart GGG for APCD used to control emissions from storage tanks<br>• CCCD provisions are not included<br>[§63.1367(b)(6)(viii)] | • Same as subpart GGG for APCD used to control emissions from storage tanks, except also must record a description of the type of maintenance performed [§63.998(d)(2)(ii)]<br>• CCCD provisions are not included |
| Wastewater stream characteristics | Keep record of partially soluble and soluble HAP concentrations in wastewater per POD or process [§63.1259(b)(6)] | Keep records of the subpart G Table 9 HAP concentrations and wastewater stream flow rate per POD and process [§63.1367(b)(6)(ii)] | Except as noted below for Group 2 streams, no specific recordkeeping requirement. However, Table 9 HAP concentrations and flow rates must be included in the NOCS |



US EPA ARCHIVE DOCUMENT

**Table 6. Comparison of Recordkeeping Requirements in Subparts GGG, MMM, and FFFF (continued)**

| Parameter | Recordkeeping requirements | | |
|---|---|---|---|
| | **Subpart GGG (PhRMA MACT)** | **Subpart MMM (PAI MACT)** | **Subpart FFFF (MON)** |
| Use of process knowledge to determine Group 2 status of a wastewater stream | Rule uses the term "not affected" rather than "Group 2." The procedures used to determine which wastewater streams are not affected must be included in the NOCS [§63.1260(f)(1)] | Keep record of Group 2 determinations that are based on process knowledge [§63.1362(d) references §63.147(f)] | Same as subpart MMM [Table 7 to subpart FFFF references §63.147(f)] |
| Notices sent with wastewater to offsite treatment operators | Keep record of the notices [§63.1259(g)] | Same as subpart GGG [§63.1362(d) references §63.147(a)] | Same as subpart MMM [Table 7 to subpart FFFF references §63.147(a)] |
| Maintenance wastewater plan | Procedures to develop, modify, update, and implement plan are consistent with requirements in §63.105 [§63.1256(a)(4)] | No requirement to develop a plan for maintenance wastewater (However, any individual discharge of maintenance wastewater that contains at least 5.3 Mg of HAP listed on Table 9 of subpart G must be managed and treated as Group 1 wastewater) | Same as subpart GGG [Table 7 to subpart FFFF references §63.105] |
| Waste management unit inspections for improper work practices and control equipment failures | Keep record documenting that required inspections were conducted [§63.1259(i)(1)] | Same as subpart GGG [§63.1362(d) references §63.147(b)(1)] | Same as subpart MMM [Table 7 to subpart FFFF references §63.147(b)(1)] |



US EPA ARCHIVE DOCUMENT

**Table 6. Comparison of Recordkeeping Requirements in Subparts GGG, MMM, and FFFF (continued)**

| Parameter | Recordkeeping requirements | | |
|---|---|---|---|
| | **Subpart GGG (PhRMA MACT)** | **Subpart MMM (PAI MACT)** | **Subpart FFFF (MON)** |
| Delay of repair provisions for emission suppression control equipment due to unavailability of parts | Keep records documenting decision to use the provision [§63.1259(f)] | Same as subpart GGG [§63.1362(d) references §63.147(b)(7)] | Same as subpart MMM [Table 7 to subpart FFFF references §63.147(b)(7)] |
| Operating extension for wastewater tanks after determining floating roof is unsafe to inspect or inspection reveals control equipment failure | Keep records documenting decision to use an extension [§63.1259(h)] | Same as subpart GGG [§63.1362(d) references §63.147(b)(6)] | Same as subpart MMM [Table 7 to subpart FFFF references §63.147(b)(6)] |
| Seal gap measurements for floating roofs on wastewater tanks | Keep records of seal gap measurements [§63.1259(i)(3)] | Same as subpart GGG [§63.1362(d) references §63.147(b)(3)] | Same as subpart MMM [Table 7 to subpart FFFF references §63.147(b)(3)] |
| Location at which vent stream entering boiler or process heater that is used to control emissions from waste management units | No record required | Keep a record of any changes in the location at which the vent stream is introduced into the flame zone [§63.1362(d) references §63.147(c)] | Same as subpart MMM [Table 7 to subpart FFFF references §63.147(c)] |



US EPA ARCHIVE DOCUMENT

**Table 6. Comparison of Recordkeeping Requirements in Subparts GGG, MMM, and FFFF (continued)**

| Parameter | Recordkeeping requirements | | |
|---|---|---|---|
| | **Subpart GGG (PhRMA MACT)** | **Subpart MMM (PAI MACT)** | **Subpart FFFF (MON)** |
| Visual and M21 inspections of closed-vent systems and inspections of vapor suppression equipment for waste management units | • Keep record of various information specified in the rule if a leak is detected during the inspection [§63.1259(i)(7)]<br>• Document date of inspection and state findings if no leaks were detected [§63.1259(i)(8) and (9)] | Same as subpart GGG [§63.1367(f)(4) through (6)] | Same as subpart GGG except<br>• The following records are not required for closed vent systems that do not convey any wastewater emissions (§63.998(d)(1)(iii)):<br>  • Name or other identification of individual who decided a repair could not be effected without shutdown<br>  • Expected date of successful repair if leak is not repaired within 15 calendar days<br>  • Dates of shutdowns that occur while the equipment is unrepaired |
| Inspections of unsafe-to-inspect and difficult-to-inspect closed-vent systems and emission suppression systems | Keep records identifying the subject equipment and written plans for inspecting the equipment [§63.1259(i)(4) and (5)] | Same as subpart GGG [§63.1367(f)(1) and (2)] | Same as subpart GGG [§63.998(d)(1)(i) for closed vent systems and §63.148(i)(1) and (2) for both closed-vent systems and emission suppression equipment] |
| Inspections of control devices used to control emissions from waste management units | Keep records documenting that required inspections were conducted [§63.1259(i)(2)] | Same as subpart GGG [§63.1362(d) references §63.147(b)(2)] | Same as subpart MMM [Table 7 top subpart FFFF references §63.147(b)(2)] |
| Bypass lines around control deices | Keep hourly records of whether the flow indicator was operating and any diversion was detected, or keep record of monthly visual inspection of the seal mechanism [§63.1259(i)(6)] | Same as subpart GGG [§63.1367(f)(3)] | Same as subpart GGG [(§63.998(d)(1)(ii) and Table 7 references §63.148(i)(3)] |
| Heat exchange systems | No recordkeeping requirements specifically listed in §63.1259, but §63.1252(c) specifies that all of §63.104 is to be followed | Comply with requirements in §63.104 [§63.1367(e)] | Same as subpart MMM [Table 10 to subpart FFFF references §63.104] |



US EPA ARCHIVE DOCUMENT

**Table 6. Comparison of Recordkeeping Requirements in Subparts GGG, MMM, and FFFF (continued)**

| Parameter | Recordkeeping requirements | | |
|---|---|---|---|
| | **Subpart GGG (PhRMA MACT)** | **Subpart MMM (PAI MACT)** | **Subpart FFFF (MON)** |
| LDAR program for equipment leaks | Records as specified in §63.1255 | Records as specified in §63.1363(g) (same as subpart GGG) | • Records as specified in 40 CFR subpart TT or subpart UU [§63.2525(a)]<br>• Differences in subpart UU relative to subpart GGG include<br>  • Differences in records for leak repairs (§63.1024(f) vs §63.1255(g)(4))<br>  • For valve reassignments between subgroups, must keep record of last monitoring result prior to reassignment<br>  • Must record the start and end dates of each monitoring period if complying with the skip monitoring provisions for connectors<br>  • QIP records<br>  • Must keep records for unsafe-to-repair connectors<br>  • Slight differences in equipment identification listing requirements<br>• Differences in subpart TT relative to subpart GGG include<br>  • Valve subgrouping is not allowed, so no records for subgrouping<br>  • No instrument monitoring for connectors, so no records of start and end date of monitoring period<br>  • No pressure testing alternative means of emission limitation |
| Process unit groups (PUG) | Not applicable | Keep records of<br>• The process units in the PUG<br>• The operating time for each process unit in the PUG<br>• Each redetermination of the primary product of the PUG<br>[§63.1367(b)(9)] | Keep the following records:<br>• Descriptions of all of the process units in the initial PUG<br>• Rationale for including each process unit in the initial PUG<br>• Calculations used to determine the primary product of the initial PUG<br>• Descriptions of, and rationale for adding, process units to the PUG after the creation date<br>• The calculation of each primary product redetermination<br>[§63.2525(i)] |
| CEMS deviations | Section 63.10(c)(8) referenced from §63.1259(a)(4) | Section 63.10(c)(8) referenced from §63.1367(a)(4) | Keep records of the date and time that each CEMS deviation started and stopped, and note whether or not the deviation occurred during a period of SSM<br>[§63.2525(h)] |



US EPA ARCHIVE DOCUMENT

**Table 7. Comparison of Reporting Requirements in Subparts GGG, MMM, and FFFF**

| Parameter | Reporting requirements | | |
|---|---|---|---|
| | **Subpart GGG (PhRMA MACT)** | **Subpart MMM (PAI MACT)** | **Subpart FFFF (MON)** |
| Initial Notification | Per §63.9(b) or (d) | Same as subpart GGG | Same as subpart GGG |
| Application for approval of construction or reconstruction | Per §63.5(b)(3) and (d) | Same as subpart GGG | Same as subpart GGG |
| Notification of CMS performance evaluation | Notify date of performance evaluation per §63.8(e)(2) | Same as subpart GGG, except the performance evaluation is only required for CEMS that are used to comply with the alternative standard | Same as subpart GGG |
| SSM reports | Submit as specified in §63.10(d)(5), except use same schedule as for periodic reports [§63.1260(i)] | Same as subpart GGG. [§63.1368(i)] | • Include as part of the compliance reports<br>• No immediate SSM report<br>• Report information only for periods of excess emissions |
| Precompliance Report | Submit 3 months prior to compliance date for approval of<br>(1) Requests to use alternative monitoring or parameters<br>(2) Description of per batch demonstrations for small control devices<br>(3) Description of test conditions for parameters set using supplemental engineering assessment<br>(4) P2 demonstration summary<br>(5) Description of engineering assessment to calculate uncontrolled emissions<br>(6) Process simulation data for determination of annual average concentra-tion of wastewater<br>(7) Bench scale or pilot scale data determination of annual average concentration of wastewater<br>[§63.1260(e)] | Same as GGG with the following exceptions:<br>• No precompliance report for process simulation, bench scale or pilot scale determinations for wastewater concentrations<br>• Operation and maintenance plan required for bag leak detectors | Same as MMM except also requires identification and discussion of control measures for streams with energetics and peroxides that are not controlled to levels of standard because of undue safety hazards |



US EPA ARCHIVE DOCUMENT

**Table 7. Comparison of Reporting Requirements in Subparts GGG, MMM, and FFFF (continued)**

| Parameter | Reporting requirements | | |
|---|---|---|---|
| | **Subpart GGG (PhRMA MACT)** | **Subpart MMM (PAI MACT)** | **Subpart FFFF (MON)** |
| Notification of Compliance Status | Submitted 150 days after the compliance date to include<br>• Applicability determinations<br>• Emission estimates<br>• Information used to demonstrate compliance (e.g., tests, design evaluations, emission profiles, and calculations)<br>• Lists of operating scenarios<br>• Description of worst-case operating and/or testing conditions for control devices<br>• Identification of emission points subject to overlapping requirements and the rule to be complied with<br>• Information regarding planned routine maintenance of CCCDs<br>• Information about equipment leak components<br>[§§63.1255(h)(2) and 631260(f)] | Same as GGG, except<br>• Requires the operating scenarios instead of a listing of them<br>• Requires that streams routed to RCRA devices be identified<br>• Requires identification of percent of PAI unit production for use as a PAI<br>• Requires records of initial process units used to create process unit groups<br>• Information about CCCDs is not applicable<br>[§§63.1363(h)(2) and 63.1368(f)] | Same as GGG, except<br>• Requires the operating scenarios instead of a listing of them<br>• Requires records of process units used to create a PUG and calculation of initial primary product of PUG<br>• Requires identification of storage tanks subject to the vapor balancing alternative<br>• Information about CCCDs is not applicable<br>[§63.2520(d)] |
| **Periodic reports (Compliance reports)** | | | |
| Schedule of reports | • Generally, semi-annual reporting periods<br>• Quarterly reporting required after certain exceedances and if a new operating scenario is implemented<br>• First reporting period is for the six months beginning on the NOCS due date<br>• Reports must be submitted no later than 60 days after the end of the reporting period<br>[§63.1260(g)(1)] | Same as subpart GGG except<br>• Implementing a new operating scenario does not trigger quarterly reporting<br>[§63.1368(g)(1)] | • Always semi-annual reporting periods (no quarterly reporting)<br>• First reporting period begins on the compliance date and extends to June 30 or December 31, whichever is later (thus the first reporting period is longer than 6 months)<br>• Section 63.10(e)(3) does not apply because reporting requirements are specified in §63.2520<br>[§63.2520(b) and Table 8 to subpart FFFF] |



US EPA ARCHIVE DOCUMENT

**Table 7. Comparison of Reporting Requirements in Subparts GGG, MMM, and FFFF (continued)**

| Parameter | Reporting requirements | | |
|---|---|---|---|
| | **Subpart GGG (PhRMA MACT)** | **Subpart MMM (PAI MACT)** | **Subpart FFFF (MON)** |
| Information to submit associated with CMS | • Submit information specified in §63.10(e)(3)(vi)(A) through (M), as applicable<br>• If excess emissions, exceedances, and excursions exceed 1% of total operating time, or total CMS downtime exceeds 5% of total operating time, submit<br>  • Monitoring data, including daily average, for days when the average is out of compliance<br>  • Operating logs and operating scenarios for the days of noncompliance<br>  • Duration of excursions<br>  • Information specified in §63.10(c)(5) through (13) for CMS<br>• To the extent applicable, state that the reporting period had no excess emissions, exceedances, excursions, or periods in which CMS were inoperative, out-of-control, repaired, or adjusted<br>[§63.1260(g)(2)(i) and (ii)] | Same as subpart GGG [§63.1368(g)(2)(i) and (ii)] | Several differences relative to subpart GGG:<br>• Section 63.10(e)(3) does not apply<br>• Reporting of data is required for all periods of deviations, not limited to reporting periods when the total duration of excess emissions, exceedances, and excursions exceed the threshold specified in §63.10(e)(3)(vii) and (viii)<br>• Must identify cause of all deviations, not just malfunctions [§63.2520(e)(5)(ii)(B) and (iii)(E)]<br>• Operating logs not required for deviations from work practice standards for equipment leaks [§63.2520(e)(5)(ii)(C)]<br>• Do not submit operating scenarios for days with deviations<br>• Submit only the operating day/block average values for the days with any deviations that occurs when using a CMS [§63.2520(e)(5)(iii)(L)]<br>• No need to categorize periods of CMS downtime by the cause of the downtime separately from other deviations [§63.2520(e)(5)(iii)(D) and (E)]<br>• Do not describe changes in CMS, process, or controls, except as they are considered changes to operating scenarios [§63.2520(e)(10)] |



US EPA ARCHIVE DOCUMENT

**Table 7. Comparison of Reporting Requirements in Subparts GGG, MMM, and FFFF (continued)**

| Parameter | Reporting requirements | | |
|---|---|---|---|
| | **Subpart GGG (PhRMA MACT)** | **Subpart MMM (PAI MACT)** | **Subpart FFFF (MON)** |
| Operating scenarios | Submit each new operating scenario implemented during the reporting period [§63.1260(g)(2)(vii)] | New operating scenarios must be submitted in the notification of process change [§63.1368(h)(1)] | Same as subpart GGG [§63.2520(e)(7)] |
| PM HAP controls | Not applicable | Update corrective action plan for the fabric filter [§63.1368(g)(2)(viii)] | Not applicable for existing sources |
| Bypass lines | Submit records of periods when gas streams were diverted to the bypass, the seal was broken, the bypass line valve was changed, or the key to unlock the bypass valve was checked out [§63.1260(g)(2)(iv)] | Same as subpart GGG [§63.1368(g)(2)(iii)] | Same as subpart GGG (§§63.146(e)(1), 63.148(j)(2) and (3), and 63.999(c)(2)(ii) and (iii)) |
| Storage tanks | • If complying by using an APCD, submit records of periods of planned routine maintenance<br>• If complying by using a floating roof, submit records as specified in §63.122(d) through (f)<br>[§63.1259(g)(2)(vi) and (viii)] | • If complying by using an APCD, submit records of actual periods of planned routine maintenance and anticipated periods of planned routine maintenance in the next reporting period<br>• If complying by using a floating roof, same as subpart GGG<br>[§63.1368(g)(2)(v) and (xii)] | • If complying by using an APCD, submit records of periods of planned routine maintenance (specified in Table 6 above), the total number of hours that required control was not met, and a description planned routine maintenance for the next reporting period (i.e., the activity, frequency, and length of time)<br>[§63.999(c)(4)]<br>• If complying by using a floating roof, submit<br>  • Inspection record when inspection failures occur (as noted in Table 6, records are slightly different than for subpart GGG; definition of failures are basically consistent)<br>  • Documentation to support requests for extensions<br>[§63.1066(b)(2) and (4)] |



US EPA ARCHIVE DOCUMENT

**Table 7. Comparison of Reporting Requirements in Subparts GGG, MMM, and FFFF (continued)**

| Parameter | Reporting requirements | | |
|---|---|---|---|
| | **Subpart GGG (PhRMA MACT)** | **Subpart MMM (PAI MACT)** | **Subpart FFFF (MON)** |
| Waste management units and wastewater treatment units | • Administrator will specify appropriate reporting for treatment units [§63.1258(g)(2) and (3)] | • Submit results of measurements that indicate biological treatment unit is out of compliance [§63.146(d)(1)]<br>• Submit monitoring results for each operating day that steam stripper is out of compliance [§63.146(d)(2)]<br>• For other treatment units, the Administrator will specify appropriate reporting requirements [§63.146(f)]<br>• Report results of any extension [§63.146(g)]<br>• For each control equipment failure identified during an inspection, of waste management units, include description of the failure, description of the nature of the repair, and the date of repair [§63.146(c)] | Same as subpart MMM [Table 7 references §63.146] |



US EPA ARCHIVE DOCUMENT

**Table 7. Comparison of Reporting Requirements in Subparts GGG, MMM, and FFFF (continued)**

| Parameter | Reporting requirements | | |
|---|---|---|---|
| | **Subpart GGG (PhRMA MACT)** | **Subpart MMM (PAI MACT)** | **Subpart FFFF (MON)** |
| Equipment leaks | • Submit records of the number of leaking components and the number monitored<br>• Submit records of leaking components not repaired and those that were determined to be nonrepairable<br>• Explanation of any delay of repairs<br>• Results of monitoring for compressors designated to operate with instrument reading of less than 500 ppm above background, all pressure relief valve monitoring, and all monitoring of closed vent systems that convey equipment leak emissions<br>• Submit records documenting initiation of monthly monitoring for pumps and valves<br>• Notification of a change in monitoring for connectors that have been opened or had the seal broken<br>• Various records for equipment that is pressure tested<br>• Revisions to any items reported in the NOCS, if the method of compliance has changed since the previous report<br>[§63.1255(h)(3)] | Same as subpart GGG except revisions to the information submitted in the NOCS is not limited to changes in the method of compliance [§63.1363(h)(3)] | • Compliance with subpart UU is the same as subpart GGG except<br>  • Report valve subgrouping information, if applicable (§63.1039(b)(3))<br>  • QIP records<br><br>• Compliance with subpart TT requires submittal of only<br>  • Total number of valves, pumps, and compressors (in the initial report)<br>  • Number of leakers<br>  • Number not repaired<br>  • Explanation of delay of repair<br>  • Dates of shutdown during the reporting period<br>  • Revisions to any of the information submitted in previous reports (i.e., regarding the total number of components) |



US EPA ARCHIVE DOCUMENT

**Table 7. Comparison of Reporting Requirements in Subparts GGG, MMM, and FFFF (continued)**

| Parameter | Reporting requirements | | |
|---|---|---|---|
| | **Subpart GGG (PhRMA MACT)** | **Subpart MMM (PAI MACT)** | **Subpart FFFF (MON)** |
| Inspection of closed vent systems and emission suppression equipment for leaks | Submit recorded information for each leak that is detected [§63.1260(g)(2)(iii)] | Same as subpart GGG [§63.1368(g)(2)(xi)] | Same as subpart GGG except<br>• Do not need to submit record of instrument and operator identification for closed vent systems that are not used for wastewater emissions<br>[§63.999(c)(2)(i) vs §63.148(j)(1)] |
| Process unit groups | Not applicable | • Submit records of process units added to the PUG<br>• Submit records of redeterminations of the primary product<br>[§63.1368(g)(2)(ix) and (x)] | Same as subpart MMM [§63.2520(e)(8)] |
| **Notification of Process Change** | | | |
| Documentation after a change to information submitted in the NOCS | The following information is to be submitted quarterly or with the periodic report<br>• A brief description of the change<br>• A description of any modifications to standard procedures or quality assurance procedures<br>• Revisions to information submitted in the NOCS<br>• Information required by the NOCS for changes involving the addition of equipment or processes<br>[§63.1260(h)(1)] | Same as subpart GGG [§63.1368(h)(1)] | Essentially the same as subpart GGG except<br>• Submit with compliance report<br>• The information is required only for changes that are not within the scope of an existing operating scenario<br>• Language does not specifically require documentation of modifications to standard procedures or quality assurance procedures (because any such change is a change to an operating scenario, which also must be reported in compliance reports)<br>[§63.2520(e)(10)(i)] |
| Documentation to submit 60 days before a change | • Any change in activity covered by the precompliance report<br>• A change in status of a control device from small to large<br>[§63.1260(h)(2)] | Same as subpart GGG [§63.1368(h)(2)] | Same as subpart GGG except also identify any change of an emission point from Group 2 to Group 1<br>[§63.2520(e)(10)(ii)] |



US EPA ARCHIVE DOCUMENT

F. Summary of Specific Provisions for Overlapping Requirements

Each of the rules contains a specific section that describes options for complying with only one rule when the same equipment is subject to more than one rule, including new source performance standards (NSPS) as well as 40 CFR part 63 standards. These options are particularly helpful for emissions sources such as leaking equipment components subject to Leak Detection and Repair (LDAR). Having one LDAR program plantwide simplifies the compliance approach. Other specific overlapping requirements address storage tanks and wastewater treatment systems. These provisions are summarized in Table 8 and are also discussed below.

1. Consistency with NSPS for storage tanks in 40 CFR part 60, subpart Kb

Each of the three rules specifies that an owner or operator may comply with the applicable part 63 standard in lieu of the NSPS in subpart Kb. Additionally, each rule requires that the storage tank be assigned to a unit based on its primary storage use, eliminating the possibility that a tank will be subject to multiple MACT standards.

2. Consistency with other MACT standards

As noted in Table 8, both subparts GGG and MMM (PhRMA and PAI MACTs) contain identical language that provide an option to consolidate recordkeeping and reporting requirements if the compliance requirements under the two rules are consistent. As noted in the previous discussion, there is significant consistency in the requirements of the standards, therefore this provision could be useful in consolidating reporting and recordkeeping for sources subject to GGG and MMM. Subpart FFFF (MON) does not contain a similar provision.

3. Compliance with subparts I, GGG, or MMM

Both subparts GGG and MMM (PhRMA and PAI MACTs) allow compliance with subpart H for equipment leak emission sources. Additionally, subpart FFFF (MON) allows compliance with either of the programs in subpart GGG or subpart MMM and with subpart H. Therefore, a facility with equipment subject to these three subparts could comply with one consolidated program.

4. Compliance with subpart FFFF for affected wastewater

For wastewater streams that have triggered applicability to the control requirements under subpart GGG or MMM (PhRMA and PAI MACTs), subpart FFFF (MON) provides an option to comply with the provisions for wastewater in subpart FFFF for all of the wastewater.

G. Summary of the Process Unit Group Option

Both subparts MMM and FFFF (PAI MACT and MON) contain an option called the Process Unit Group (PUG) that allows the source to designate equipment that is multipurpose and subject to different MACT requirements over time to be subject only to the MACT standard



US EPA ARCHIVE DOCUMENT

that applies to the primary product. The PUG approach as described in subpart FFFF allows a facility to combine all processes that are run in nondedicated equipment, where some of the equipment overlaps among the processes, into a single entity (i.e., a PUG) for regulatory purposes. Then, for all of the processes in the PUG, the facility may comply with the rule that applies to the primary product produced in the PUG. In subpart MMM, the PUG concept is slightly more restrictive in that it only allows the pieces of equipment that are multipurpose to be included in the PUG, and not the remaining equipment within the process that contains the multipurpose equipment. However, the broader, less restrictive language in subpart FFFF applies to PAI units as well and therefore can effectively supercede subpart MMM requirements.

As an important point of clarification, we note that the PUG concept does not allow aggregation of process units into a PUG where only control devices, and not processing equipment, are shared. These circumstances do not reflect operations using multipurpose equipment processors for which the PUG concept was developed.

**Table 8. Summary of Relevant Overlapping Provisions**

| Provision | 40 CFR Part 63 MACT Subparts | | |
|---|---|---|---|
| | **GGG (PhRMA MACT)** | **MMM (PAI MACT)** | **FFFF (MON)** |
| ***Consistency with other MACT standards.*** After the compliance dates specified, an affected source subject to the provisions of this subpart that is also subject to the provisions of any other subpart of 40 CFR part 63 may elect, to the extent the subparts are consistent, under which subpart to maintain records and report to EPA. | 63.1250(h)(1) | 63.1360(i)(1) | Not applicable |
| ***Compliance with subpart I of this part.*** After the compliance dates specified, an affected source with equipment subject to subpart I of this part may elect to comply with either the provisions of (insert this subpart) or the provisions of subpart H of this part for all such equipment. | 63.1250(h)(4) | 63.1360(i)(4) | Not applicable |
| ***Compliance with subpart I, GGG, or MMM of this part 63.*** After the compliance dates specified in §63.2445, if you have an affected source with equipment subject to subpart I, GGG, or MMM of this part 63, you may elect to comply with the provisions of subpart H, GGG, or MMM of this part 63, respectively, for all such equipment. | Not applicable | Not applicable | 63.2535(d) |
| ***Compliance with subpart GGG of this part 63 for wastewater.*** After the compliance dates specified in §63.2445, if you have an affected source subject to this subpart and you have an affected source that generates wastewater streams that meet the applicability thresholds specified in §63.1256, you may elect to comply with the provisions of this subpart FFFF for all such wastewater streams. | Not applicable | Not applicable | 63.2535(e) |



US EPA ARCHIVE DOCUMENT

**Table 8. (continued)**

| Provision | 40 CFR Part 63 MACT Subparts | | |
|---|---|---|---|
| | GGG (PhRMA MACT) | MMM (PAI MACT) | FFFF (MON) |
| ***Compliance with subpart MMM of this part 63 for wastewater.*** After the compliance dates specified in §63.2445, if you have an affected source subject to this subpart, and you have an affected source that generates wastewater streams that meet the applicability thresholds specified in §63.1362(d), you may elect to comply with the provisions of this subpart FFFF for all such wastewater streams (except that the 99 percent reduction requirement for streams subject to §63.1362(d)(10) still applies). | Not applicable | Not applicable | 63.2535 (f) |

## III. Consolidation Approaches

Two general approaches are available for consolidating requirements when multiple MACT rules (i.e., subparts GGG, MMM, and/or FFFF) apply to nondedicated equipment. The approach to use depends on what nondedicated equipment is shared among processes in different source categories. If processing equipment is shared, then the PUG provisions in subpart MMM or subpart FFFF can be used to identify a single rule to comply with for all processes that share the equipment. If the processes share only control devices and/or wastewater management and treatment systems, then a variety of other provisions that address overlapping provisions must be used, along with an evaluation of the specific applicable requirements, to determine a control strategy that will ensure compliance with each rule. Each of the three MACT rules contains language that address overlapping requirements for storage tanks, wastewater, and equipment leaks. Thus, the detailed comparison of applicable requirements will generally be limited to the process vent standards. While the formats and requirements of process vent standards are generally consistent, there are slight differences which could lead to some confusion regarding consolidated applicable requirements.

The Appendix presents six case studies that illustrate these concepts for various scenarios. Three of the case studies use the PUG concept and two of the case studies present approaches to developing a consolidated set of requirements. Table 9 presents a tabulated list of the case studies and a summary of what consolidation approach best simplifies compliance requirements.

Since the compliance date of subpart FFFF (MON) is later than that of subpart GGG (PhRMA MACT) or subpart MMM (PAI MACT), an owner or operator must comply with subparts GGG and MMM as written until the compliance date of subpart FFFF. At that time, the facility could report its intent to consolidate requirements under the notification of compliance status report and make the necessary permit modifications under title V.



US EPA ARCHIVE DOCUMENT

**Table 9. Summary of Case Studies**

| Case Study | Applicable MACT Standards | | | Shared Process Equipment | Shared Control Devices or WW Management Units | Consolidation Techniques |
|---|---|---|---|---|---|---|
| | GGG (PhRMA MACT) | MMM (PAI MACT) | FFFF (MON) | | | |
| 1 | | ✔ | ✔ | yes | yes | PUG |
| 2 | | ✔ | ✔ | yes | yes | PUG |
| 3 | | ✔ | ✔ | no | no | None |
| 4 | | ✔ | ✔ | no | yes | None |
| 5 | ✔ | | ✔ | yes | yes | PUG[a] |
| 6 | | ✔ | ✔ | no | yes | See summary of consolidated requirements |

[a] The case study also describes consolidation requirements in the event that the PUG option is not selected.



US EPA ARCHIVE DOCUMENT

*This page intentionally left blank.*

US EPA ARCHIVE DOCUMENT

# Appendix A

# Six Case Studies

US EPA ARCHIVE DOCUMENT

*This page intentionally left blank.*

US EPA ARCHIVE DOCUMENT

# Appendix A

## Six Case Studies

The case studies are based on information from two facilities that meet the major source threshold for HAPs and use nondedicated processing equipment. None of the case studies precisely represent any specific process(es). Assumptions were made to fill in data gaps and to allow the case studies to illustrate different scenarios. Changes also were made to simplify the illustrations and to remove confidential information.

### Case Study 1—Area 1

Overview

Area 1 contains nondedicated processing equipment that is used to make two end products and two intermediates for one of the end products. Product P is produced in a PAI process unit that is subject to 40 CFR part 63, subpart MMM, because this product is a PAI as defined in subpart MMM and the process uses HAP. The production of the other end product is conducted in a miscellaneous organic chemical manufacturing process unit (MCPU) that is subject to 40 CFR part 63, subpart FFFF, because the product (Product M1) is an organic chemical in SIC 2879, the process uses HAP, and the process unit is not subject to any other MACT rule. The intermediates for this end product are isolated intermediates (Products M2 and M3) as specified in subpart FFFF because they are stored (in drums) before being used as raw materials in the process to produce the end product. The process units for the intermediates also are MCPUs under subpart FFFF because the intermediates are in SIC 2869, the processes use HAP, and the process units are not subject to any other MACT rule. Products M1 and M2 can be produced simultaneously; other products must be produced one at a time.

General Discussion of MACT Requirements

Table A-1 summarizes the emission standards that apply to each of the four process units making products P, M1, M2, and M3. Emission limits for transfer operations are not shown in the table because they do not apply to any of the process units (subpart MMM does not have standards for transfer operations, and Products M1, M2, and M3 are not loaded into tank trucks or rail cars).

The only HAP involved in the production of Product M1 is toluene as a solvent, which is supplied from drums. Wastewater that contains toluene is generated from the discarded water layer after reaction, from discarded water-based solutions used to wash the organic filtrate, and from water used to clean the process vessels. The spent toluene from process operations and cleaning is also considered wastewater. Except for the wastewater generated from washing the product, all of the toluene-containing wastewater is also hazardous waste. The hazardous waste is incinerated in an onsite hazardous waste incinerator. Hazardous waste tanks are not storage tanks because they are exempted in the definition of “storage tank” in subpart FFFF; however, they are subject to 40 CFR part 264/265, subpart CC. Figure A-1 is a process flow diagram for this process.



US EPA ARCHIVE DOCUMENT

**Table A-1. Applicable Standards for Case Study 1**

| Process | Applicable rule | Do the standards apply to the process? | | | |
|---|---|---|---|---|---|
| | | Process vent | Storage tank | Equipment leak | Wastewater |
| Product P | MMM | Yes. Because uncontrolled organic HAP (toluene) emitted from batch process vents is >330 lb/yr. No control required for $HCl/Cl_2$ because $HCl/Cl_2$ emissions are <6.8 Mg/yr. | No. The only storage tank is for HCl solution, but it is <20,000 gal. Other reactants and solvents are supplied from a gas cylinder, drum, or tank truck. | Yes. At least some equipment components are in organic HAP service for more than 300 hr/yr. | Yes, for the organic waste and rag layer. Wastewater from washing the filter cake, distillation, and cleaning vessels contains toluene at less than 1,000 ppmw and, thus, is not subject to control. |
| Product M1 | FFFF | No. All vents are batch process vents, the collective organic HAP emissions are <10,000 lb/yr, and there are no $HCl/Cl_2$ emissions. | No. There are no storage tanks associated with the process. Raw materials are supplied from drums or bags, and product is drummed out. | Yes. At least some of them are in organic HAP service for more than 300 hr/yr when all processes are considered. | Yes. The spent toluene from process operations and cleaning would be Group 1 wastewater. Wastewater from the decanter, filtrate washing, and water-based process vessel cleaning are Group 2 because they are one-phase streams with <1,000 ppmw of toluene. |



US EPA ARCHIVE DOCUMENT

**Table A-1. Applicable Standards for Case Study 1 (continued)**

| Process | Applicable rule | Do the standards apply to the process? | | | |
|---|---|---|---|---|---|
| | | Process vent | Storage tank | Equipment leak | Wastewater |
| Product M2 | FFFF | Yes. Uncontrolled organic HAP emissions from batch process vents exceeds 10,000 lb/yr. | No. All reactants and solvents are supplied in drums, and the product is drummed out. | Yes. Same rationale as for Product M1. | Yes. Three wastewater streams exceed the Group 1 thresholds: the spent methanol cleaning solvent contains >30,000 ppmw methanol, the water layer from the toluene extraction contains >30,000 ppmw methanol, and the rag layer from the extraction contains more than 1,000 ppmw toluene. Wastewater from water-based cleaning is Group 2 because it has <1,000 ppmw HAP. |
| Product M3 | FFFF | Yes. Uncontrolled organic HAP emissions from batch process vents exceeds 10,000 lb/yr. | No. All reactants are supplied from drums, as a solid, or from gas cylinders. The product is drummed out. | Yes. Same rationale as for Product M1. | Yes. The rag layers and primarily organic waste streams would be Group 1 for toluene and/or chlorobenzene. Wastewater from the distillation operations and vessel cleaning are Group 2 because they are single-phase streams that contain <1,000 ppmw of toluene and/or chlorobenzene. |



US EPA ARCHIVE DOCUMENT

US EPA ARCHIVE DOCUMENT

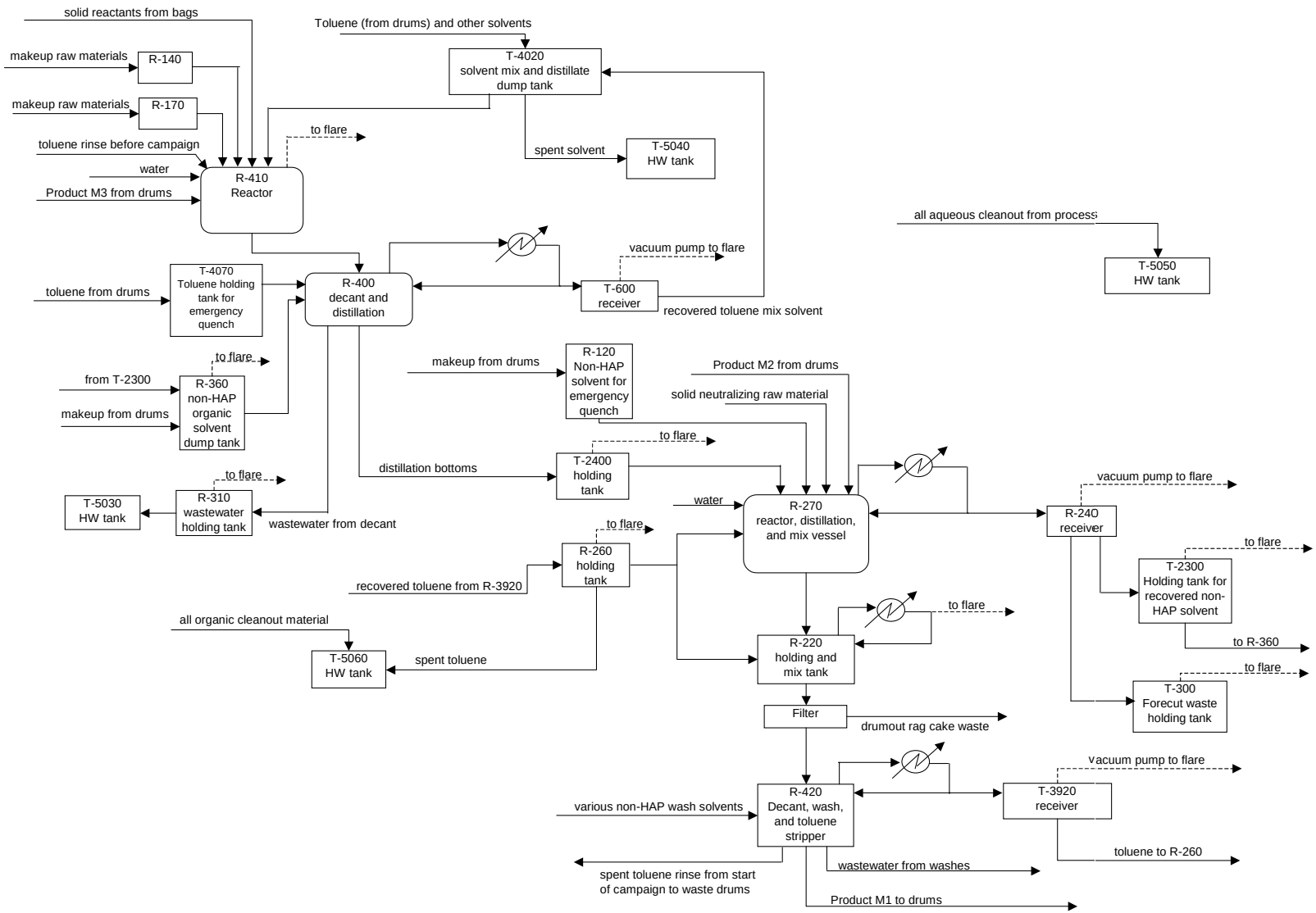


**Figure A-1. Process flow diagram for production of Product M1.**

The HAP involved in the production of Product M2 include vinyl acetate and ethylene glycol as reactants, methanol as a reactant and solvent, and toluene as an extraction solvent. All of these HAP materials are supplied from drums, and the product is drummed out. Wastewater is generated from extraction, water-based cleaning of process vessels, methanol cleaning of process vessels, the light ends from distillation, and the distillation residue. All of these wastewater streams, except the water used to clean the process vessels, are also hazardous waste. The hazardous waste is hard-piped to tanks or drums, but these vessels are not considered storage tanks under subpart FFFF. The resulting hazardous waste is incinerated in an onsite hazardous waste incinerator. Figure A-2 is a process flow diagram for this process.

The HAP involved in the production of Product M3 include chlorobenzene as a reactant, toluene as an extraction solvent, and hydrogen chloride (HCl) as a reaction byproduct. The chlorobenzene and toluene are both supplied from drums, not storage tanks. Wastewater is generated from washing the organic layer to remove impurities, from both distillation units, and from cleaning the process vessels. The discarded rag layers and the primarily organic waste streams are also considered wastewater and hazardous waste. Hazardous waste is incinerated in an onsite hazardous waste incinerator, and the vessels used to store hazardous waste are not storage tanks under subpart FFFF. Figure A-3 is a process flow diagram for this process.

The HAP involved in the production of Product P include chlorine as a reactant; HCl as a reactant, extraction solvent, and pH adjuster; and toluene as an extraction solvent. The HCl is supplied from a storage tank, the chlorine from gas cylinders, and the toluene from a tank truck. Wastewater is generated from cleaning process vessels with water, the water layer in the distillation receiver, filtering the product slurry, and washing the filter cake. The organic waste and rag layer from the extraction step would also be considered wastewater. Figure A-4 is a process flow diagram for this process.



US EPA ARCHIVE DOCUMENT

US EPA ARCHIVE DOCUMENT

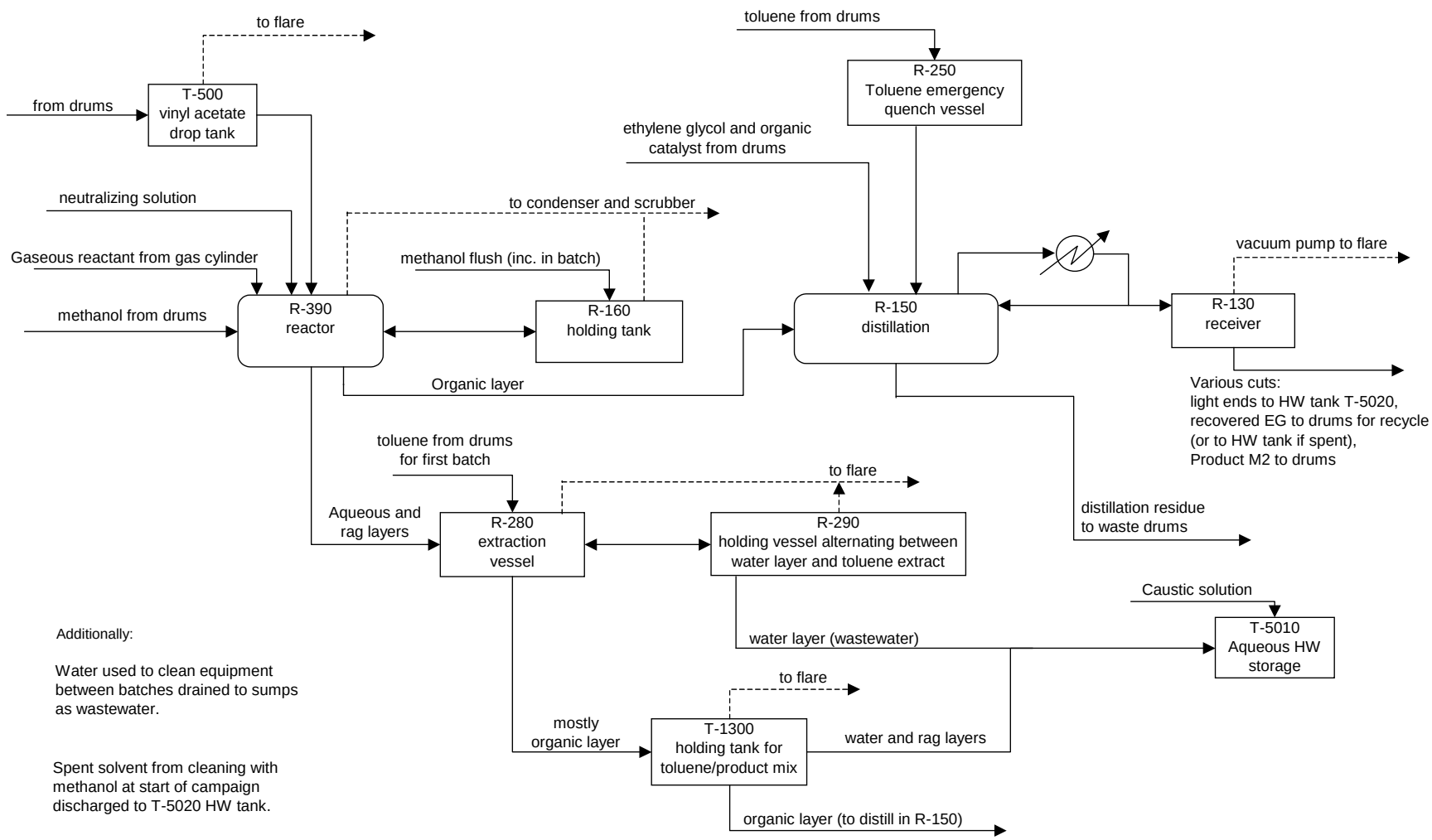


**Figure A-2. Process flow diagram for production of Product M2.**

US EPA ARCHIVE DOCUMENT

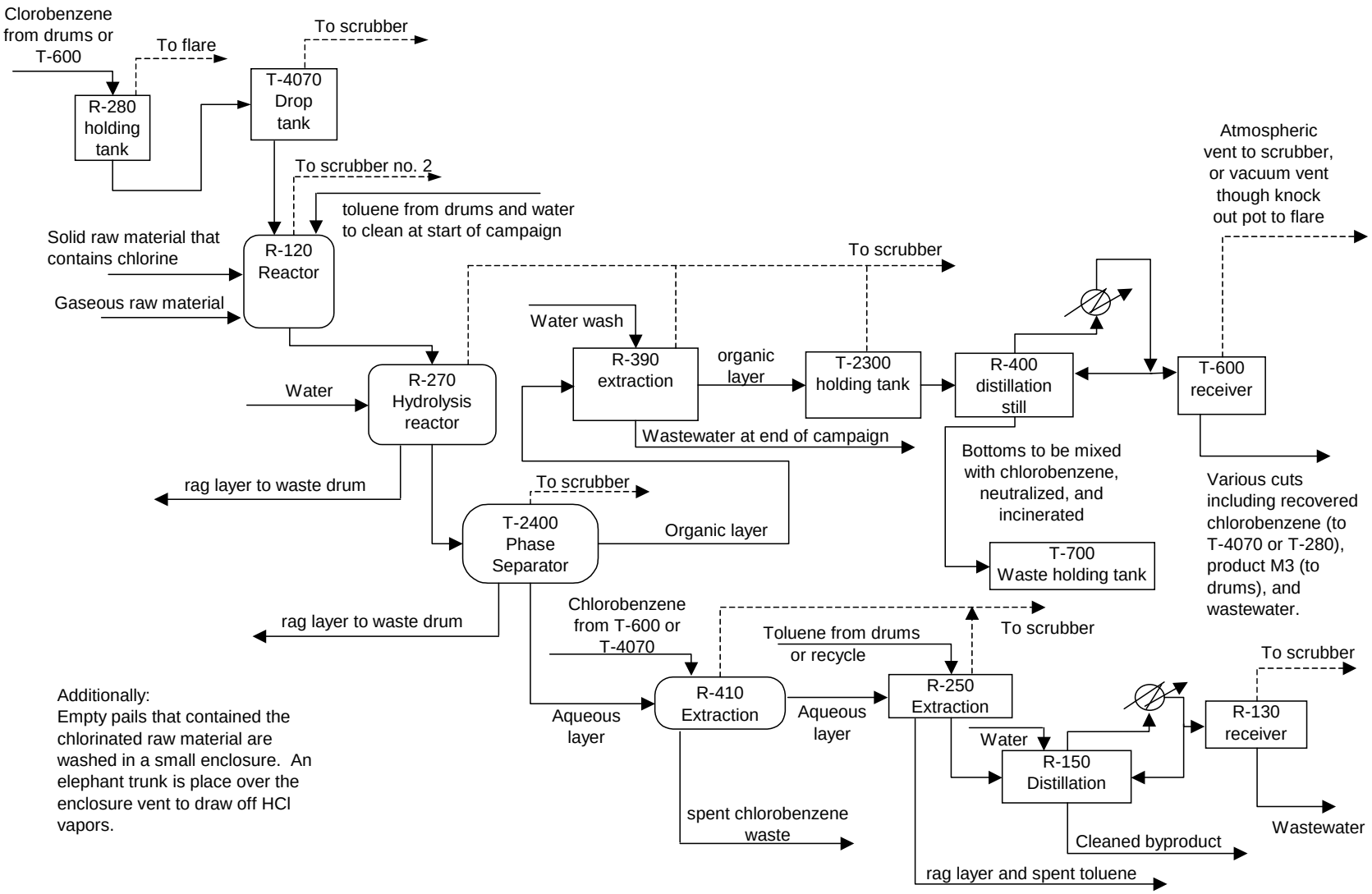


**Figure A-3. Process flow diagram for production of Product M3.**

US EPA ARCHIVE DOCUMENT

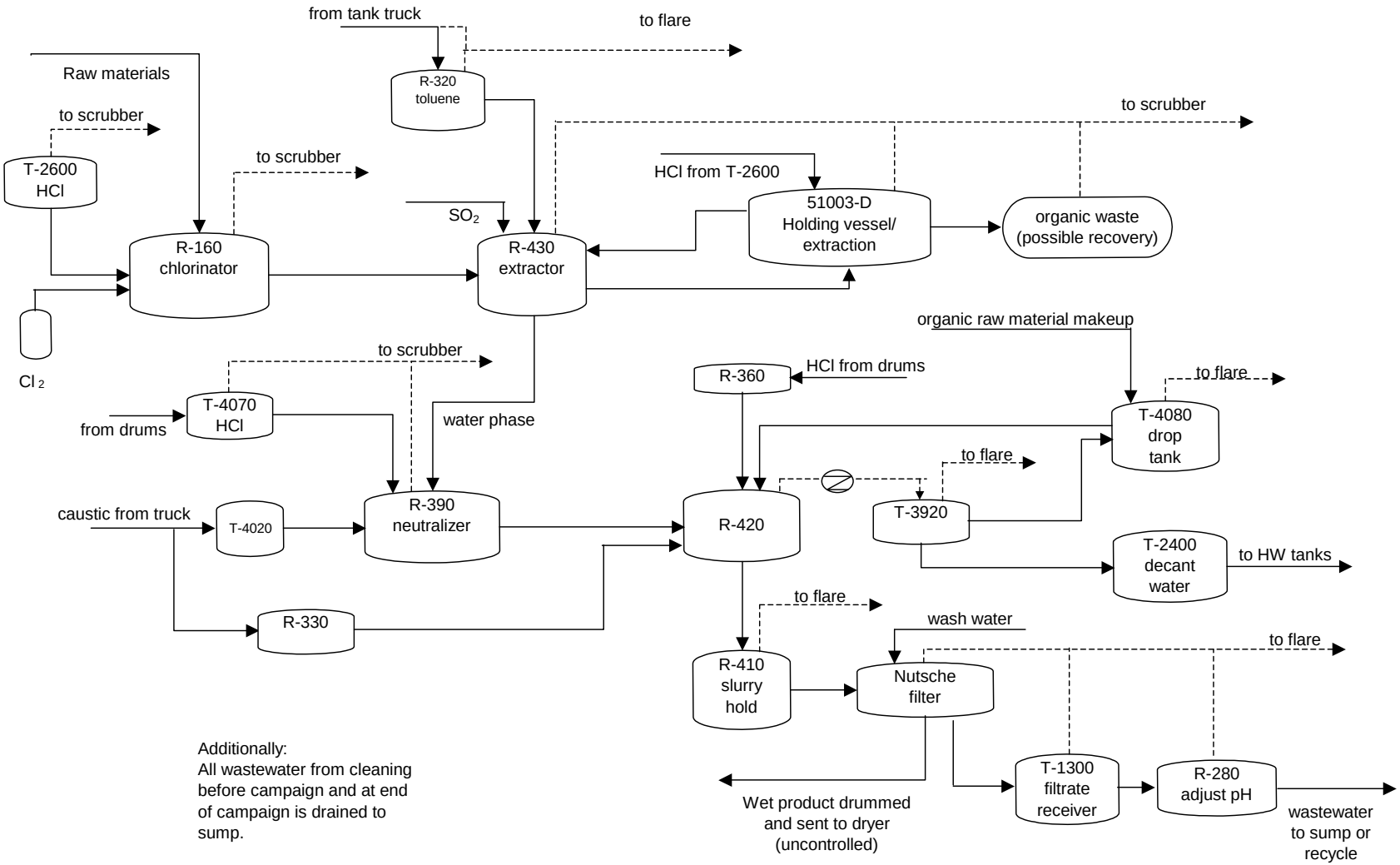


**Figure A-4. Process flow diagram production of Product P.**

Overlapping Situations and Strategies for Minimizing Overlap

Numerous process vessels are used in the production of both Product P and one or more of the other products. For example, vessel R-390 is used in the production of products P, M2, and M3; vessel R-420 and the filter are used in the production of products P and M1; and vessel T-4070 is used in production of products P, M1, and M3. Therefore, the process vent standards in both subpart MMM and subpart FFFF apply to these vessels (and others) at different times, and the monitoring requirements in both rules apply to the control devices used for the emission streams. Similarly, various equipment components are subject to the LDAR requirements in both rules. Finally, the wastewater management and treatment requirements in both rules and the Resource Conservation and Recovery Act (RCRA) apply to the piping, tanks, and incinerator used by all of the processes. The rules include options, however, for dealing with each of these overlapping situations.

Since processing equipment used for Product P is shared with each of the other three processes, a PUG may be developed that encompasses all four process units. In this example, the primary product is material subject to subpart FFFF (i.e., the sum of the operating time for products M1, M2, and M3 is greater than the operating time for Product P over the 5-year period), so the facility could elect to comply with subpart FFFF for all four process units. (Alternatively, if Product P were the primary product for the PUG, then the owner or operator could elect to comply with subpart MMM for all four process units.) The hazardous waste incinerator is not subject to any provisions in subparts MMM and FFFF because both subparts exempt RCRA hazardous waste incinerators from initial and ongoing compliance requirements as well as recordkeeping and reporting requirements. Subparts MMM and FFFF also state that an owner or operator may determine which rule (RCRA or the MACT) contains the more stringent control requirements (e.g., management requirements for wastewater tanks) and comply only with that rule. That determination is beyond the scope of this study.

If the owner or operator elects not to develop a PUG, then the process vent requirements in both rules would apply, including initial compliance, monitoring, recordkeeping, and reporting. Subpart FFFF specifies that an owner or operator with affected sources under subparts FFFF and MMM may elect to comply with the equipment leak provisions in either rule for all equipment components. Similarly, for affected sources under both subparts, an owner or operator may elect to comply with the wastewater provisions in subpart FFFF for all wastewater streams (although the HAP concentration and wastewater flow thresholds for control in subpart MMM still apply for Product P).

Effect of Other Operating Conditions on Overlap

1. What if Product M1 is a PAI? The two intermediates (M2 and M3) would not be integral intermediates under subpart MMM because they are stored. Thus, the intermediates would be subject to subpart FFFF, not subpart MMM. However, subpart MMM allows you to designate any intermediates for PAI process units to be PAI process units themselves, even if they are not integral intermediates. Thus, you could comply with subpart MMM for all four process units. Alternatively, you could try to develop a process unit group that would allow compliance with



US EPA ARCHIVE DOCUMENT

subpart FFFF; if the production of the two intermediates exceeds the production of the two end products, then the primary product for the PUG would be material subject to subpart FFFF, and you could comply with subpart FFFF for all four process units.

2. What if toluene were supplied from a 10,000 gal storage tank? Storage tanks must be assigned to the process with the predominant use for the tank. If the predominant use is for Product P (or a process unit group with PAI products as the primary product), then there would be no requirements because existing source storage tank standards in subpart MMM apply only to tanks with capacities of at least 20,000 gal. There also would be no requirements if the predominant use is for Product M1, M2, or M3 (or a PUG with material subject to subpart FFFF as the primary product) because subpart FFFF does not require control of storage tanks storing material with a maximum true vapor pressure (MTVP) of HAP less than 1 psia (toluene is about 0.5 psia).

3. What if Product P is an intermediate for a PAI process in a separate area of the plant? Assuming Product P is a liquid that is discharged to a storage vessel, Product P would not meet the definition of an integral intermediate because it is stored, and the production of Product P and the final PAI occur in separate processing areas. Thus, all four processes would be subject to subpart FFFF.



US EPA ARCHIVE DOCUMENT

## Case Study 2—Area 2

Overview

General Description

Area 2 houses the equipment used to manufacture a variety of products and is known as a multipurpose production facility. The permit application for the facility lists 15 products that the facility could make, including UV stabilizers for paints, an oil additive, a circuit board developer, a corrosion inhibitor, and several other pesticide intermediates and PAIs. Additionally, the application indicates that Area 2 is used in formulation and packaging of various herbicides (i.e., PAIs) and specialty chemicals. This case study is based on the production of three end products manufactured in the area: Products A, B, and C. The manufacturing processes for all three products are subject to 40 CFR part 63, subpart MMM (the PAI MACT) because the products are PAIs as defined in subpart MMM, and the processes use and emit HAP. Product C is actually manufactured at another site, sent to Area 2 for purification, and sent back to the originating facility. This purification step is subject to the PAI MACT because the definition of the term "process" in subpart MMM includes purification unit operations. For the purpose of this illustration, we assumed that the intermediate production steps associated with the manufacture of Product B are subject to subpart FFFF because they do not qualify as integral intermediates, as defined in subpart MMM, and they emit HAP. Therefore, equipment in this facility has the potential to be subject to both subpart MMM and subpart FFFF of 40 CFR part 63. Each of the three processes reviewed is discussed in greater detail below.

Product A is produced by several reactions involving HAP and non-HAP raw materials. HAP compounds associated with the process include HCl, hydrogen fluoride (HF), and trace levels of xylene associated with solvent. Vents from the process prior to the introduction of solvent into Reactor D-3208 are composed primarily of HCl, HF, and sulfur dioxide ($SO_2$) and are routed to the Area 2 caustic scrubber. Once the organic solvent is introduced, vents from remaining process vessels are directed to the facility's vent gas combustor. A simplified process flow diagram is presented as Figure A-5.



US EPA ARCHIVE DOCUMENT

US EPA ARCHIVE DOCUMENT

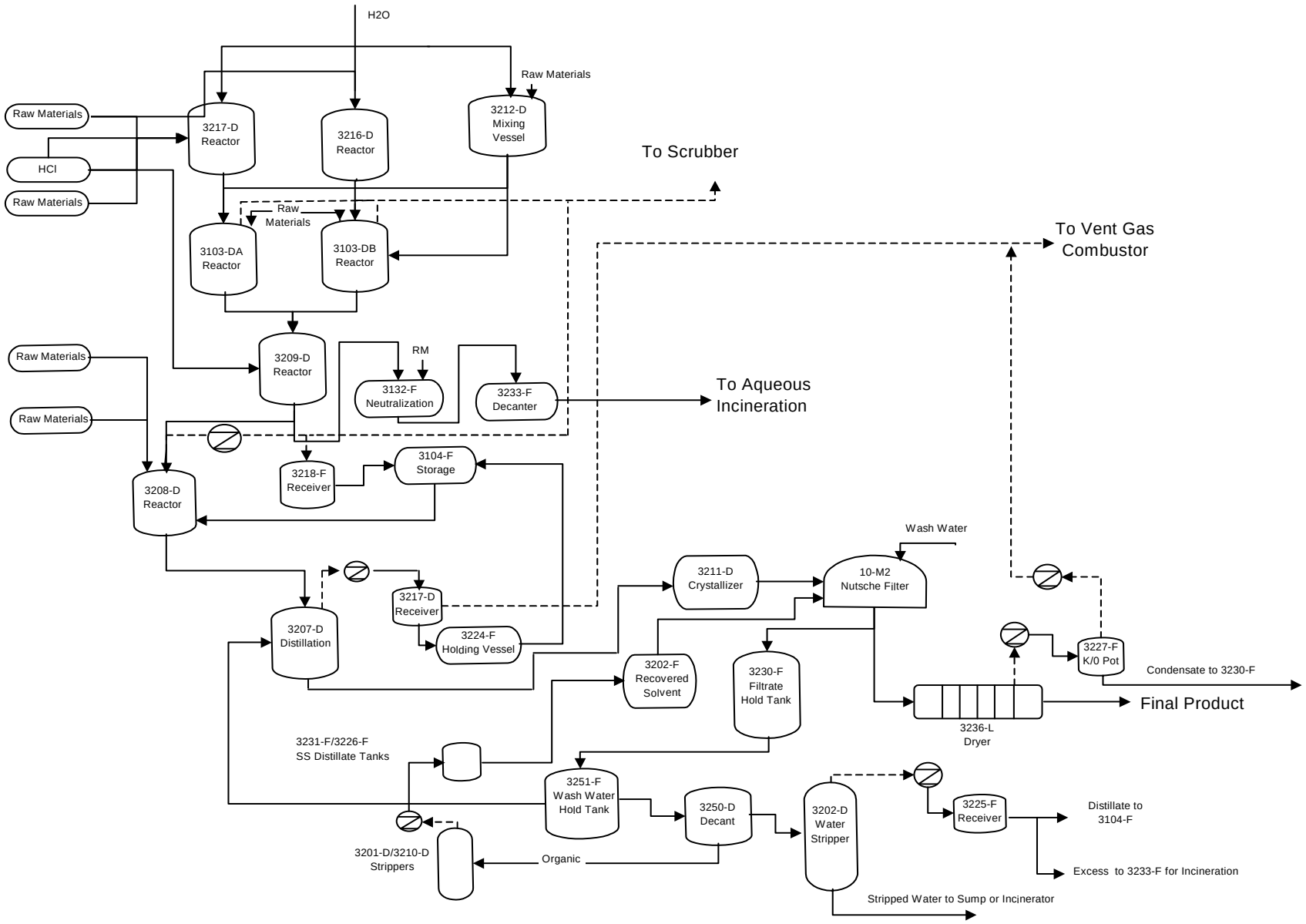


**Figure A-5. Process flow diagram for production of Product A.**

The production of Product B involves a three step reaction process that begins with the formation of an intermediate from raw materials. The HAP associated with the first product step include HCl, which is a reactant, and toluene, which is used as a solvent for the intermediate. The second processing step involves the hydrogenation of the intermediate to form a second intermediate. HAP associated with this step are the toluene solvent and methanol, which is used to wash the catalyst. Finally, the third step of the process involves the reaction of the second intermediate to form the PAI product. The HAP associated with the third step of this process is toluene. A simplified process flow diagram is presented in Figure A-6. Note that the facility's permit application indicates that intermediate products from Step 1 and Step 2 are "stored" prior to further processing. This storage step has implications for the applicability of the PAI MACT, as the intermediates produced in Steps 1 and 2 may not be considered integral intermediates and therefore not trigger applicability to the PAI MACT. However, as noted above, these steps would be covered by the MON if they do not qualify as integral intermediates. Product C is a purification process that uses the HAP acetonitrile. A simplified flow diagram is presented in Figure A-7. Processes A, B, and C cannot be operated at the same time, as the use of some of processing equipment is shared.

HAP Emissions Information

The facility's title V permit application provides uncontrolled emission rates of HCl into the scrubber of 94 lb/hr and provides a scrubber efficiency of 99.99 percent. Emissions of HF have not been quantified but are reported as trace. Although some organics are reported from the scrubber, none are HAP. HAP emissions reported from the facility's vent gas combustor include toluene, methanol, HCl, and HF. Destruction efficiency of organics in the vent gas combustor is reported to be 99.99 percent. During the hydrogenation step associated with Product B, emissions of toluene are vented through a condenser system and then directly to the atmosphere. Some equipment in Area 2 also has the capability of venting to the atmosphere from the facility vent system. HAP emissions of HCl and HF are reported from this system. Finally, there are several storage tanks containing toluene and methanol at the facility which appear to be capable of venting directly to the atmosphere via the facility's vent system, or to the vent gas combustor (the title V permit provides either scenario as an option). There are also several sources of wastewater.

General Discussion of MACT Requirements

Table A-2 presents a general description of requirements for the three products. Subpart MMM requires 90 percent control of all process vents within a PAI process unit if uncontrolled emissions exceed 330 lb/yr. Based on the emission rates described above, Processes A, B, and C will trigger applicability to process vent control requirements. Likewise, during the production of intermediates in Steps 1 and 2 in Process B, process vent control requirements in subpart FFFF also will be triggered. All three processes will trigger control requirements for equipment components, storage tanks, and wastewater.



US EPA ARCHIVE DOCUMENT

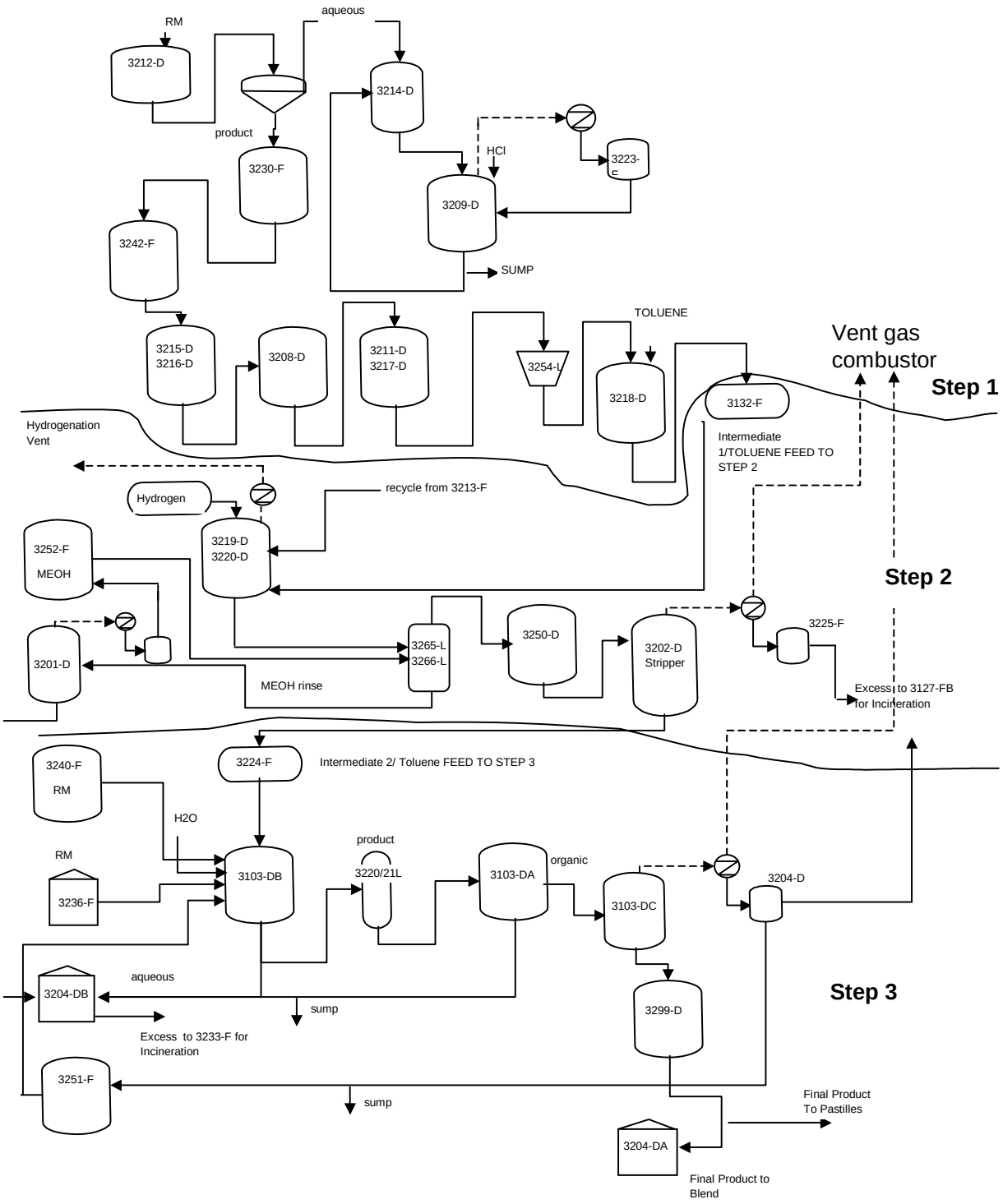


**Figure A-6. Process flow diagram for production of Product B.**



US EPA ARCHIVE DOCUMENT

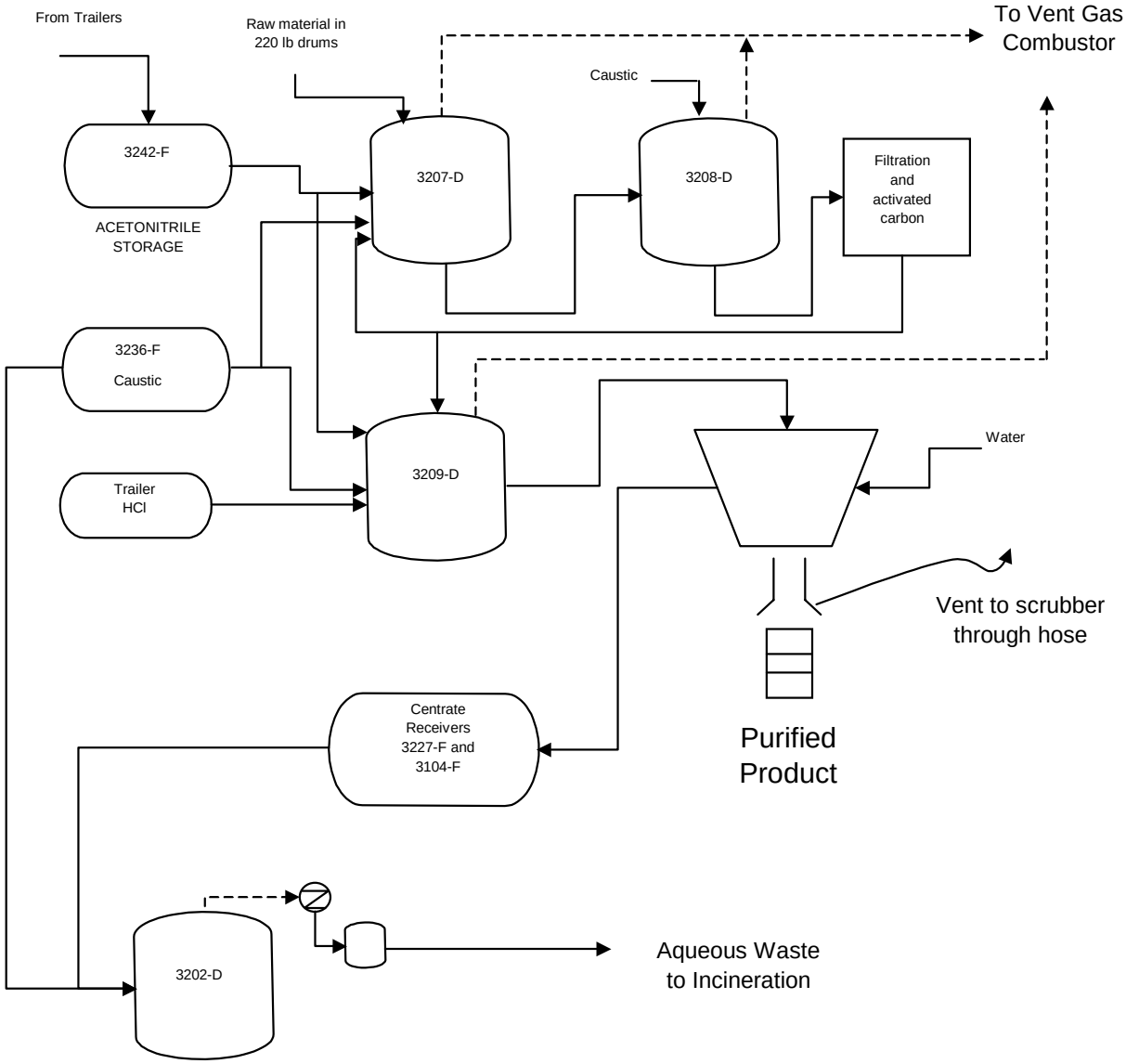


**Figure A-7. Process flow diagram for production of Product C.**



US EPA ARCHIVE DOCUMENT

**Table A-2. General MACT Requirements for Case Study 2**

| Product Process | Rule | Process vents | Storage tanks | Equipment leaks | Wastewater | Transfer operations |
|---|---|---|---|---|---|---|
| A | PAI | Yes. Sum of process vent HAP emissions exceeds 330 lb/yr. | No, although MTVP of toluene and methanol tanks exceed threshold, tanks are below 20,000 gallons. | Yes. Some equipment components will be in HAP service >300 hr/yr. | No points of determination (PODs) | Not applicable |
| B (step 3) | | | | | Yes. PODs with methanol identified. | |
| C | | | | | No PODs | |
| B (steps 1 and 2) | MON | Yes. Sum of process vent HAP emissions may exceed 10,000 lb/yr. | Yes. Toluene and methanol tanks are above 10,000 gal. | | No PODs | No. Loading thresholds will not be exceeded. |

Overlapping Situations and Strategies for Minimizing Overlap

Because the manufacture of Products A, B, and C share processing equipment, there will be an overlap in applicability between subparts MMM and FFFF, particularly for process vents and equipment leaks. The owner or operator could consolidate compliance with both rules using the PUG concept that is provided in subpart FFFF. The PUG approach is available for equipment that is used to manufacture more than one product, and termed "nondedicated." Using the PUG approach, the owner or operator would identify equipment that are part of a nondedicated MCPU. In Area 2, these equipment would be those reactors and processing equipment that could be used to make either PAI or MON products. The PUG would then include each processing unit that contains equipment that overlaps with any other processing equipment. After establishing the PUG, the owner or operator would then identify the primary product of the PUG and comply with the rule that applies to the primary product for all such equipment in the PUG. This approach would serve to consolidate MACT requirements and eliminate duplicative recordkeeping provisions.



US EPA ARCHIVE DOCUMENT

## Case Study 3—Area 3

Overview

General Description

Area 3 is primarily known as a formulations plant. The unit contains equipment used to manufacture three end products and to formulate these end products via blending with water, solvents, or surfactants and other products. The manufacturing process for one end product is subject to 40 CFR part 63, subpart MMM, because the product is a PAI as defined in subpart MMM, and the process uses HAP. The building houses one prereactor and four finishing reactors; a batch still; and numerous raw material, blend, and product storage tanks. Only one end product can be produced at a given time. A simplified diagram is presented as Figure A-8.

From the flow diagram, the prereactors and the finishing reactors are each equipped with their own condensers. There are no other devices that are used to control emissions for equipment in Area 3.

HAP Emissions Information

The only HAP emitted from Area 3 is 2-butoxyethanol, a glycol ether. Further, the Area 3 permit application lists emissions after control of 2-butoxyethanol of 396 lb/yr, with 362.3 lb/yr estimated from the vent header and the remaining 33.9 lb/yr from a raw material tank. No HAP are emitted from the formulation operations.

Identification of Process Units

The boundaries of the PAI process unit are shown on the process flow diagram as Product A. Note that per the definition of "PAI process unit" in subpart MMM, the formulation operations in Area 3 are not considered part of the PAI process unit.

General Discussion of MACT Requirements

Table A-3 presents a general description of requirements for the PAI process unit. Subpart MMM requires 90 percent control of all process vents within a PAI process unit if uncontrolled emissions exceed 330 lb/yr. Based on the reported emission rate from the vent header, Process A will meet this trigger for process vent control. Additionally, the components in 2-butoxyethanol service to be subject to the LDAR requirements. The MTVP (vapor pressure at maximum bulk storage temperature) of 2-butoxyethanol is below the applicability cutoff for control of storage tanks of 3.45 kPa (0.5 psi).



US EPA ARCHIVE DOCUMENT

US EPA ARCHIVE DOCUMENT

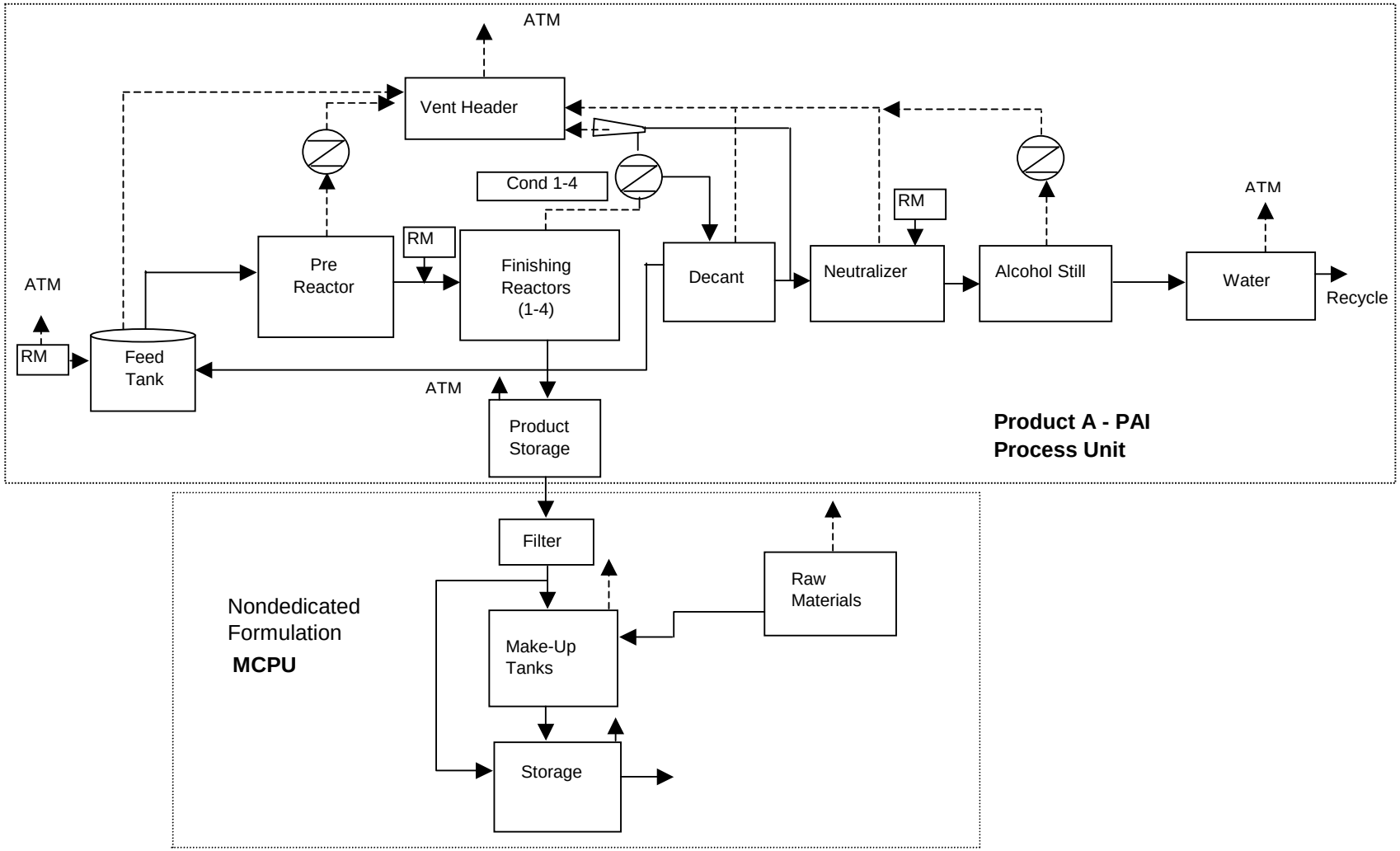


**Figure A-8. Process flow diagram for production in Area 3.**

**Table A-3. General MACT Requirements for Case Study 3**

| Process | Applicable rule | Process vents | Storage tanks | Equipment leaks | Wastewater |
|---|---|---|---|---|---|
| A | PAI MACT | Yes. Sum of process vents exceeds 330 lb/yr uncontrolled emissions. | No. MTVP of HAP is below 3.45 kPa. | Yes. Some equipment components will be in HAP service for >300 hr/yr. | No. There are no process wastewater streams from this unit. |

Overlapping Situations and Strategies for Minimizing Overlap

As currently configured, sources in Area 3 are not subject to more than one MACT because there are no instances of shared processing or control equipment.

Effect of Other Operating Conditions on Overlap

1. What if formulation products use HAP?

Subpart MMM specifically exempts formulation of pesticide end product. However, subpart FFFF covers the production of organic chemicals that use, produce, or process HAP that are not covered by other MACT standards. If HAP are used in formulation, subpart FFFF would apply to the formulation operations identified in Figure A-8 and these equipment would constitute an MCPU during the production of MON products. The processing equipment and control devices used in the PAI process unit and the MCPU would not overlap, unless the same HAP (2-butoxyethanol) was used in both process units. In this case, it is possible that the HAP storage tank and equipment components in supply lines such as pumps, valves, and connectors from the HAP storage tank to the process units would potentially be subject to two standards. Both subpart MMM and subpart FFFF require the owner or operator to assign storage tanks to a process unit based on throughput to each process unit. Therefore, there is essentially no potential for overlap from the storage tank. For LDAR, the MON specifically allows compliance with other programs, such as the program required by subpart MMM. Therefore, the facility could apply one consolidated LDAR program to components in Area 3.



US EPA ARCHIVE DOCUMENT

## Case Study 4—Area 4

Overview

General Description

Area 4 contains the equipment used to manufacture several different products, including an antimicrobial agent, a chemical intermediate, a biocide, a heat transfer fluid, and two pesticide active ingredients (Products A and B). No HAP are used, produced, or processed in the manufacturing processes for the antimicrobial agent, the chemical intermediate, the biocide, or the heat transfer fluid. However, HAP are used in the production of both PAIs. In the manufacture of Product A, 2-butoxy ethanol is used as a raw material. Triethylamine is used as a raw material in the manufacture of Product B. Processes A and B share the same equipment, so only one product can be produced at any given time. Because Products A and B are registered PAIs, both manufacturing processes would be covered by subpart MMM. The formulation of a pesticide end product using product A, however, would be covered by subpart FFFF since subpart MMM specifies that formulation is not covered, and the formulation process uses HAP (xylene is a component of the formulation solvent). We identified this formulated product as Product C.

A simplified process flow diagram for the manufacture of Products A , B, and C is provided in Figure A-9. From the process flow diagram, process vents from the reactor that is used to manufacture the PAI products, as well as the blend tank where Product A is formulated, are controlled by a water scrubber. Raw material storage vents for aromatic-200 (the solvent that contains xylene), triethylamine, and 2-butoxyethanol are uncontrolled.

HAP Emissions Information

Yearly HAP emissions composed of 2-butoxyethanol, triethylamine, and xylene from process vents and storage for both processes, after control, are reported to be approximately 1,000 lb/yr in the permit application.

Identification of Process Units

The boundaries of the PAI process units (Products A and B) and the MCPU (Product C) are identified in Figure A-9.



US EPA ARCHIVE DOCUMENT

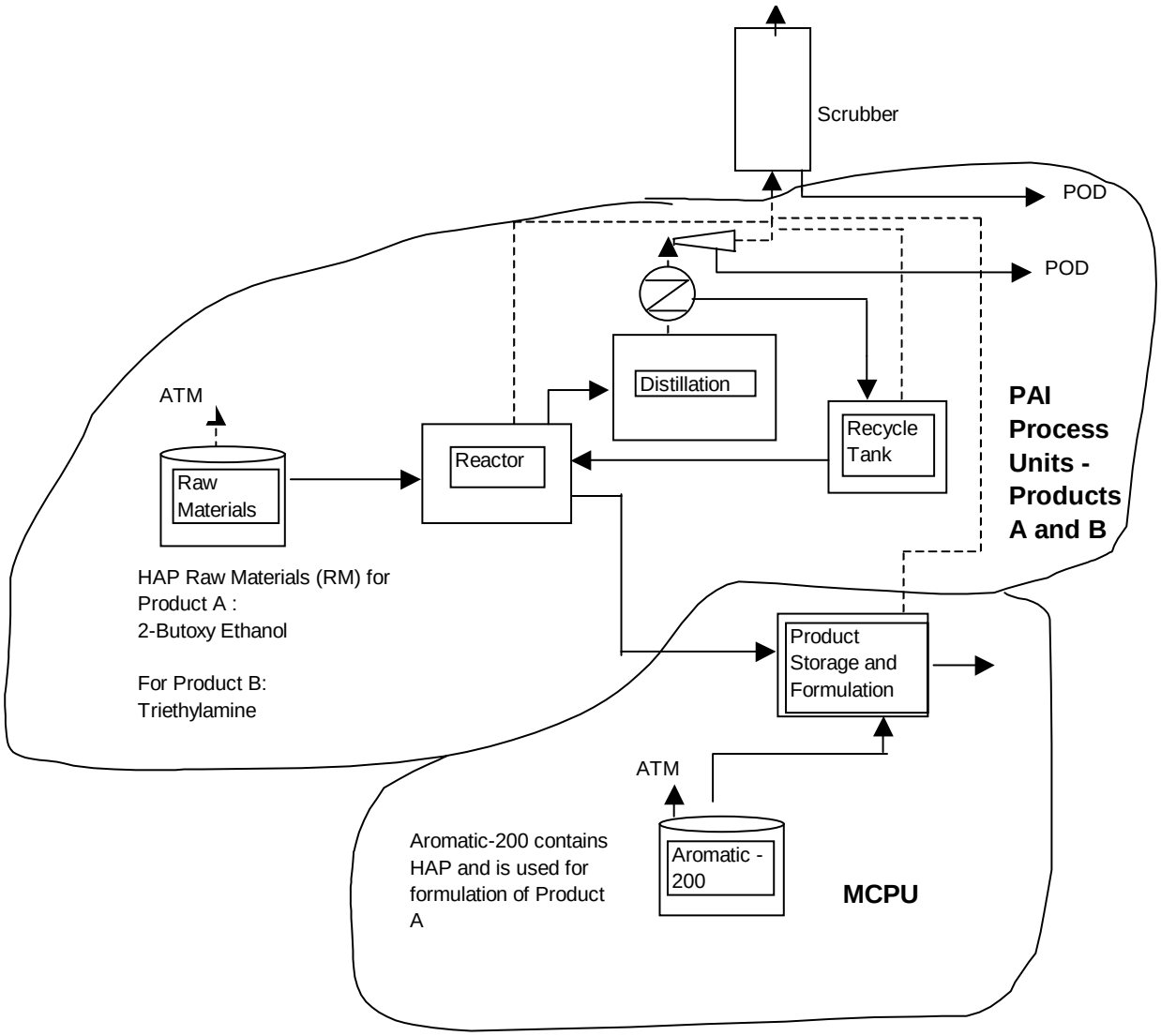


**Figure A-9. Process flow diagram for production in Area 4.**



US EPA ARCHIVE DOCUMENT

General Discussion of MACT Requirements

Table A-4 presents a general description of requirements for the PAI process units and the MCPU. Emissions data indicate that HAP emissions from process vents associated with Processes A and B would trigger control requirements for subpart MMM. However, because xylene process vent emissions, after control, are reported to be fairly low (49 lb/yr), and considering the fact that the water scrubber would not be effective for the control of xylene, the process vent emissions from the formulation process (Process C) would not trigger process vent control requirements for subpart FFFF. Storage of xylene-based aromatic solvent also would not trigger storage tank requirements under subpart FFFF because the MTVP of the xylene in the Aromatic-200 does not exceed depending on the actual composition of the solvent and the tank capacity. Some equipment components in all three processes are in organic HAP service; thus triggering the LDAR requirements under both subparts MMM and FFFF.

**Table A-4. General MACT Requirements for Case Study 4**

| Process | Rule | Process vents | Storage tanks | Equipment leaks | Wastewater | Transfer operations |
|---|---|---|---|---|---|---|
| A | PAI MACT | Yes. Sum of process vents exceed 330 lb/yr uncontrolled emissions. | No. MTVP of HAP is below 3.45 kPa. | Yes. Some equipment components are in organic HAP service for >300 hr/yr. | No. PODs contain <1,000 ppmw Table 9 HAP. | No. PAI MACT does not cover these operations |
| B | PAI MACT | | Yes. MTVP of HAP is >3.45 kPa and capacity is >20,000 gal | | | |
| C | MON | No. Sum of process vents do not exceed 10,000 lb/yr uncontrolled emissions. | No. The MTVP of HAP does not exceed 6.9 kPa. | | No. POD will likely not exceed cutoffs. | No. Loading thresholds are below cutoffs. |

Overlapping Situations and Strategies for Minimizing Overlap

As currently configured, sources in Area 4 are not subject to more than one MACT because there are no instances of shared processing or control equipment.

Effect of Other Operating Conditions on Overlap

1. What if HAP emissions from Process C exceed 10,000 lb/yr?

If HAP emissions of xylene from the formulation operations (Process C) were to exceed 10,000 lb/yr on an uncontrolled basis, the facility would have to install a control device that would be effective in controlling xylene emissions. However, there would still be no overlap in processing equipment, and since the existing scrubber system could still be used to control HAP from Processes A and B, there also would be no overlap in control equipment.



US EPA ARCHIVE DOCUMENT

## Case Study 5—Area 5

Overview

General Description

Area 5 contains the equipment necessary to manufacture a number of ion exchange resins. Most of the resins are MON products (subject to subpart FFFF); two are pharmaceutical products (subject to subpart GGG). Figure A-10 contains a simplified flow diagram describing the relevant equipment and processes in Building 3. From the figure, the initial starting point for the manufacture of all ion exchange resins is the manufacture of an intermediate ether compound, which we have named Product A. This is accomplished in reactor 1 using methanol, HCl, a non-HAP reactant, and recycled organics from the later stages of the resin manufacturing processes. The HAP emissions from reactor 1 are routed through a condenser system, and remaining gases are routed in series through two scrubbers and the "afterburner," or thermal oxidizer system, which is reported to achieve a control efficiency of 99.9 percent. The methanol storage tank is uncontrolled. Product A may be subsequently stored prior to further processing as a raw material for manufacturing the ion exchange resins. This means Product A is an isolated intermediate under both subpart GGG and subpart FFFF. Thus, the manufacture of Product A is conducted in a dedicated MCPU that is distinct from process units for the downstream resin process trains.

The production of ion exchange resins occurs simultaneously in three identical trains that follow the Product A production process (for simplicity, Figure A-10 shows only one of these trains). The process trains are operated in essentially the same manner, where the Product A is reacted with copolymer to make an intermediate resin that is heated, then cooled and washed with an organic liquid. The process trains are used to produce some resins that are MON products and other resins that are pharmaceutical products. In Figure A-10, the MON resins are identified as "Products B," and the pharmaceutical resins are identified as "Products C." The reactors in the process trains are vented through a condenser that is followed by a refrigerated absorber system and a scrubber. Organic compounds are recovered using several distillation systems. Noncondensables from the distillation system are routed to scrubber 1. A second reaction with amines is conducted to make final product anion resins. Vent gases from this reactor are sent to scrubber 3. Finally, the anion resin is transferred to a final reactor where it is washed with water. Vent gases from the final reactor are sent to scrubber 4.

The building also houses a group of smaller reactors that are used to make a certain class of specialty resins. All of these resins are MON products. In Figure A-10, these resins are identified as "Products D." Several of these resin products require ethylene dichloride (EDC), a HAP, as a raw material. Vents from the distillation operation are vented to the afterburner system without first passing through scrubbers. Once the EDC and other organic compounds have been removed from the resin in the distillation operation, vents from the second wash stage of this process are routed to scrubber 4.



US EPA ARCHIVE DOCUMENT

US EPA ARCHIVE DOCUMENT

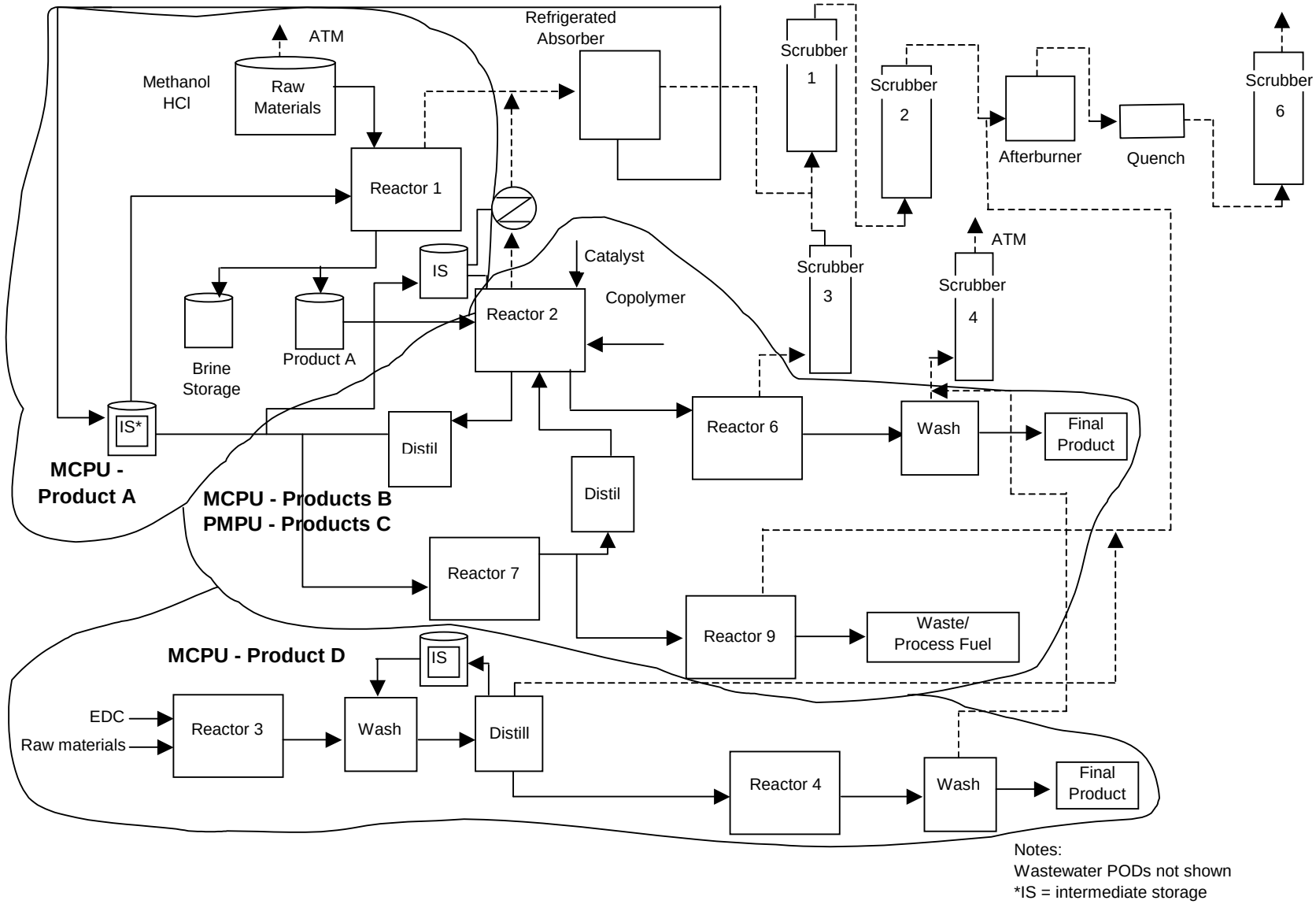


**Figure A-10. Process flow diagram for production in Area 5.**

HAP Emissions Information

Based on the permit application, numerous HAP are used, processed, and ultimately emitted from the equipment used for manufacturing Product A and ion exchange resins. Table A-5 presents the actual HAP emissions from process vents and storage (from the permit application).

**Table A-5. Summary of Emissions Information for Case Study 5**

| HAP compound | Annual emissions, lb/yr | | |
|---|---|---|---|
| | Afterburner | Scrubber 4 | Methanol storage |
| Methyl chloride | 1,119 | | |
| Dimethyl ether | 97 | 323 | |
| Formaldehyde | 2 | | |
| Methanol | 49 | 2 | 1,004 |
| Ethylene dichloride | 1,122 | | |
| Hydrogen chloride | 19,100 | 19 | |
| Chlorine | 8,385 | | |

In addition, six wastewater streams are discharged from the resin production processes, including the afterburner scrubber effluent. Five of the wastewater streams are Group 1 (and thus subject to control). The scrubber effluent, however, is Group 2 (and not subject to control) because the HAP concentration is less than 1,000 ppmw.

Identification of Process Units

The boundaries of the dedicated MCPU process unit and the remaining nondedicated units are presented in Figure A-10.

General Discussion of MACT Requirements

Table A-6 contains a general description of applicable requirements for sources in Area 5. Individual processes manufacturing MON products, such as Products A, B, and D (which include various ion exchange resins) would trigger MON MACT process vent requirements to control 98 percent of HAP emissions from each MCPU with greater than 10,000 lb/yr of uncontrolled HAP. Production of the pharmaceutical products would also trigger process vent control requirements of 93 percent. Other emission sources would also be subject to applicable requirements, including the methanol storage tank, wastewater management and treatment systems, and LDAR components.



US EPA ARCHIVE DOCUMENT

**Table A-6. General MACT Requirements for Case Study 5**

| Process | Applicable rule | Process vents | Storage tanks | Equipment leaks | Wastewater | Transfer operations |
|---|---|---|---|---|---|---|
| A | MON | Yes. Sum of process vents exceeds 10,000 lb/yr uncontrolled emissions. | Yes. Methanol storage tank has capacity ≥10,000 gal. | Yes. Components will be in HAP service >300 hrs/yr. | Yes. POD exceeds applicable limits. | No. Loading thresholds are below cutoffs. |
| B, D | MON | | | | | |
| C | PhRMA | Yes. Process vents must meet 2,000 lb/yr post control or 93%. | No. Methanol storage tank will be assigned to MCPU based on predominant use. | | | Not applicable |

Overlapping Situations and Strategies for Minimizing Overlap

Because the pharmaceutical products (identified as Products C in Figure A-10) and the MON products (Identified as Products B in Figure A-10) can potentially be made at the same time, the control devices, equipment components, and wastewater management and treatment systems could be subject to both the MON and the PhRMA MACT at the same time. Further, because the PhRMA products (Products C) and MON products (Products B) can be made in different process trains (e.g., using nondedicated equipment), the same processing equipment could be part of an MCPU some of the time and a pharmaceutical manufacturing process unit (PMPU) at other times. Area 5, therefore, provides an example of overlap stemming from shared equipment, shared control devices, and shared wastewater conveyance and treatment systems.

Because the processing equipment is shared, our first approach would be to use the PUG concept, which would not require a case-by-case consolidation approach; however, as an example, we have developed a consolidation approach that could also be used to illustrate how to consolidate requirements for shared control devices or waste management units. Both approaches are described below.

PUG Approach

The most straightforward approach available for this case study is to ensure compliance with both rules using the PUG concept that is provided in subpart FFFF. The PUG approach is available for equipment that is used to manufacture more than one product, and termed "nondedicated." Since the pharmaceutical products can be made in the same equipment as the other MON products, the owner or operator would have the option to comply using the PUG concept. Using the PUG approach, the owner or operator would identify equipment that are part of a nondedicated MCPU. In Area 5, these equipment would be those reactors and processing equipment that could be used to make either the pharmaceutical or the MON ion exchange resins



US EPA ARCHIVE DOCUMENT

(Processes B and C). The PUG would then include each processing unit that contains equipment that overlaps with any other processing equipment. Once the PUG is established, the owner or operator would make a primary product determination. The primary product of this process unit group would be the MON product, since the PhRMA products were estimated to make up only about 10 percent of the production of other ion exchange resins (thus the operating time for Process C is less than for Process B). Based on the determination that the primary product of the PUG would be MON materials, the owner or operator could comply with the MON for all equipment in the PUG. This approach would serve to consolidate MACT requirements and eliminate duplicative recordkeeping provisions. In the case of wastewater, using the PUG concept might also serve to eliminate conveyance and treatment requirements for methanol-containing wastewaters if the methanol concentration of wastewater generated by the PMPU were less than 30,000 ppmw applicability trigger for Group 1 streams provided in subpart FFFF.

Consolidation Approach

Table A-7 shows several possible strategies for consolidating requirements and minimizing the effect of these overlapping requirements. These strategies include using specific provisions in the subparts that address overlap. For example, after the compliance dates of subpart FFFF, if a facility has equipment subject to LDAR requirements in subpart FFFF and the facility also has equipment that is subject to the LDAR requirements in subpart I, GGG, or MMM, then subpart FFFF allows compliance with the LDAR provisions of any of the applicable subparts H, GGG, or MMM for all of the subject equipment. Therefore, it should always be possible to comply with only one LDAR program. Second, when a facility has wastewater streams subject to subpart FFFF and other streams that are subject to subparts GGG and/or MMM, subpart FFFF contains consolidation provisions that allow all of the streams to comply with the requirements of subpart FFFF. Note, however, that the HAP concentration thresholds for control in each rule still apply. Thus, if the methanol concentration in the wastewater from the PMPUs is between 5,200 ppmw and 30,000 ppmw, then control is required even if complying with the management and treatment requirements of subpart FFFF.

**Table A-7. Consolidation Approach for Case Study 5**

| Emission Source | Consolidation Strategy |
|---|---|
| Process Vents | See Table A-8 |
| Storage Tanks | Assign tank to subpart FFFF |
| Wastewater | Comply with subpart FFFF for all affected wastewaters; §63.2535(e) |
| Equipment Leaks | Comply with subpart GGG; §63.2535(d) |

For process vents, our approach requires a review of each applicable requirement. Our control strategy assumes that the incinerator alone will achieve the required control efficiency for organic HAP. For process vents that are subject to both subparts GGG and FFFF and controlled by one centralized combustion device, there are two basic options: (1) conduct an initial performance test and set appropriate monitoring parameters to demonstrate continuous



US EPA ARCHIVE DOCUMENT

compliance, or (2) equip the scrubber stack with a CEMS to continuously measure total organic compounds (TOC) and halogens and hydrogen halides (or, for halogens and hydrogen halides, demonstrate 95 percent removal from the scrubber). The initial compliance test under option 1 must show either (1) 98 percent removal of organic HAP from the combustion device and 99 percent removal of hydrogen halides and halogens from the scrubber following the combustion device or (2) outlet TOC concentrations less than 20 ppmv and outlet hydrogen halide and halogen concentrations less than 20 ppmv). To eliminate monitoring requirements under Option 1 on the scrubbers upstream of the incinerator, the performance demonstration should be conducted when the scrubbers are not operational.

Since the compliance date of subpart FFFF is later than that of subpart GGG, the owner or operator must comply with subpart GGG as written until the compliance date of subpart FFFF, at which time, the facility could report under the subpart FFFF notification of compliance report its intent and strategy to consolidate requirements, and make necessary permit modifications under Title V. The provision allowing consolidation is §63.1250(h)(1) in subpart GGG, which prompts the operator to comply with both regulations by implementing a strategy that will assure compliance under both regulations. Appropriate consolidated requirements for each compliance strategy are summarized in Table A-8.

**Table A-8. Specific Consolidation Approach for Case Study 5**

| Requirement | MACT subparts | | Option 1 | Option 2 |
|---|---|---|---|---|
| | GGG (PhRMA) | FFFF (MON) | | |
| Organic HAP Control Requirement | | ✓ | 98% or to ≤20 ppmv [Table 2 to subpart FFFF] | Alternative Standard: concentration standard of 20 ppmv HAP and 20 ppmv hydrogen halides and halogens [§63.2505] |
| Halogenated Stream Control Requirement | | ✓ | 99% control of hydrogen halides and halogens or to ≤20 ppmv [Tables 1 and 2 to subpart FFFF] | 95% reduction for scrubber control of hydrogen halides and halogens [§63.2505][a] |
| Initial Compliance Demonstration | | ✓ | Initial performance test to demonstrate 98% or 20 ppmv, 99% or 20 ppmv based on worst case | Initial performance test to demonstrate scrubber control efficiency [§63.2505] |
| Monitoring | | ✓ | Continuous monitoring of<br>• scrubber liquid flow<br>• pH or caustic strength<br>• inlet gas flow rate<br>• gas temperature exiting combustion temperature | Continuous monitoring of<br>• TOC concentration using CEMS (also comply with Appendix F procedure 1 of 40 CFR part 60)<br>• scrubber liquid flow<br>• pH or caustic strength<br>• inlet gas flow rate<br>• gas temperature exiting combustion temperature<br>Correct for supplemental gas to 3% $O_2$ [§63.2450(j)(5)] |



US EPA ARCHIVE DOCUMENT

**Table A-8. Specific Consolidation Approach for Case Study 5 (continued)**

| Requirement | MACT subparts | | Option 1 | Option 2 |
|---|---|---|---|---|
| | GGG (PhRMA) | FFFF (MON) | | |
| Calibration | ✓ | ✓ | Annual calibration of<br>• temperature monitoring device [§63.1258(b)(1)(vii)] and<br>• scrubber liquid flowrate [§63.1258(b)(1)(ii)], unless manufacturer's specifications are more stringent<br>For all other parametric monitors, calibrate according to manufacturer's specifications | |
| Recordkeeping | ✓ | | Keep 15-minute monitoring data, not daily or hourly averages [§63.1259(b)(1)] | |

[a] The 95% option is selected because it is a simpler alternative than using a CEMS.

As noted in Tables 1 through 8 in the main body of this document, there are some slight differences in requirements between the two standards; we have concluded that for this case, compliance with the requirements described above will ensure compliance with both standards. We note the following differences and our rationale for selection of the overlying option:

- If complying with the alternative standard for organic HAP, subpart FFFF requires a correction for supplemental gasses to correct outlet concentrations to 3 percent oxygen. Subpart GGG also requires this correction, but provides an alternative consisting of maintaining adequate temperature and residence time. Subpart FFFF provides no such alternative; therefore, compliance with the alternative standard will require the 3 percent correction.

- Subpart FFFF requires the use of appendix F procedure 1 of 40 CFR 60 for CEMS. Subpart GGG does not.

- Subpart FFFF requires continuous monitoring of scrubber pH or caustic strength, while subpart GGG allows daily monitoring

- Subpart FFFF requires calibration of parameter monitoring instruments according to manufacturer's specifications, while subpart GGG specifies monitoring frequency and calibration accuracy for some parameter monitors. In order to comply with both standards, an owner or operator would have to monitor at least as frequently and to the accuracy requirements required in subpart GGG and more frequently and to narrower accuracy if the manufacturer's specifications required it. For devices not specified in subpart GGG, the owner or operator would follow manufacturer's specifications as provided in subpart FFFF.



US EPA ARCHIVE DOCUMENT

- Subpart GGG requires keeping records of each measurement, not daily or hourly averages.

In addition, we note that subpart GGG allows the shutdown of a centralized combustion control device as long as upstream devices are operational; subpart FFFF does not. Therefore, the owner or operator could not shutdown a centralized control and comply with the requirements of subpart GGG if processes subject to subpart FFFF were operating.

US EPA ARCHIVE DOCUMENT

## Case Study 6—Area 6

Overview

General Description

Area 6 contains equipment used to manufacture Product A, a PAI, and 3 other compounds (Products B, C, and D), one of which is an intermediate in the production of Product A. The permit application indicates that generally all equipment is connected to the vent system which is in turn controlled with an incinerator. Figure A-11 contains a simplified flow diagram of the equipment and does not specifically indicate connections to the waste gas incinerator. From the diagram, the manufacture of intermediates is accomplished in reactor 5, while the PAI synthesis occurs in reactor 1. The intermediate used in the production of Product A is not considered a PAI integral intermediate because it is stored prior to further processing (although under subpart MMM you may elect to consider any intermediate process for a PAI as a PAI process unit; thus, Product B could be subject to subpart MMM). Therefore, Products B, C, and D are subject to subpart FFFF and Product A is subject to subpart MMM. Because the MON products are manufactured in different processing equipment, these products can be manufactured at the same time as the PAI product.

HAP Emissions Information

HAP emissions from processing equipment consist of chlorine, HCl, and methanol. Emissions of 234 lb/yr of methanol and 258 lb/yr of HCl are reported from the incinerator stack, based on information contained in the permit application for Building No. 4.

Identification of Process Units

The boundaries of the dedicated PAI process unit and the remaining nondedicated MCPUs are presented in Figure A-11.

General Discussion of MACT Requirements

Table A-9 contains a general description of applicable requirements for sources in Area 6. Individual processes manufacturing MON products, such as Products B, C, and D, would likely trigger MON process vent control requirements. Production of the PAI Product A would also trigger process vent control requirements. The methanol storage tank and equipment leaks would also be subject to applicable requirements. The methanol storage tank would be assigned to Process A because the predominant use is for this process.



US EPA ARCHIVE DOCUMENT

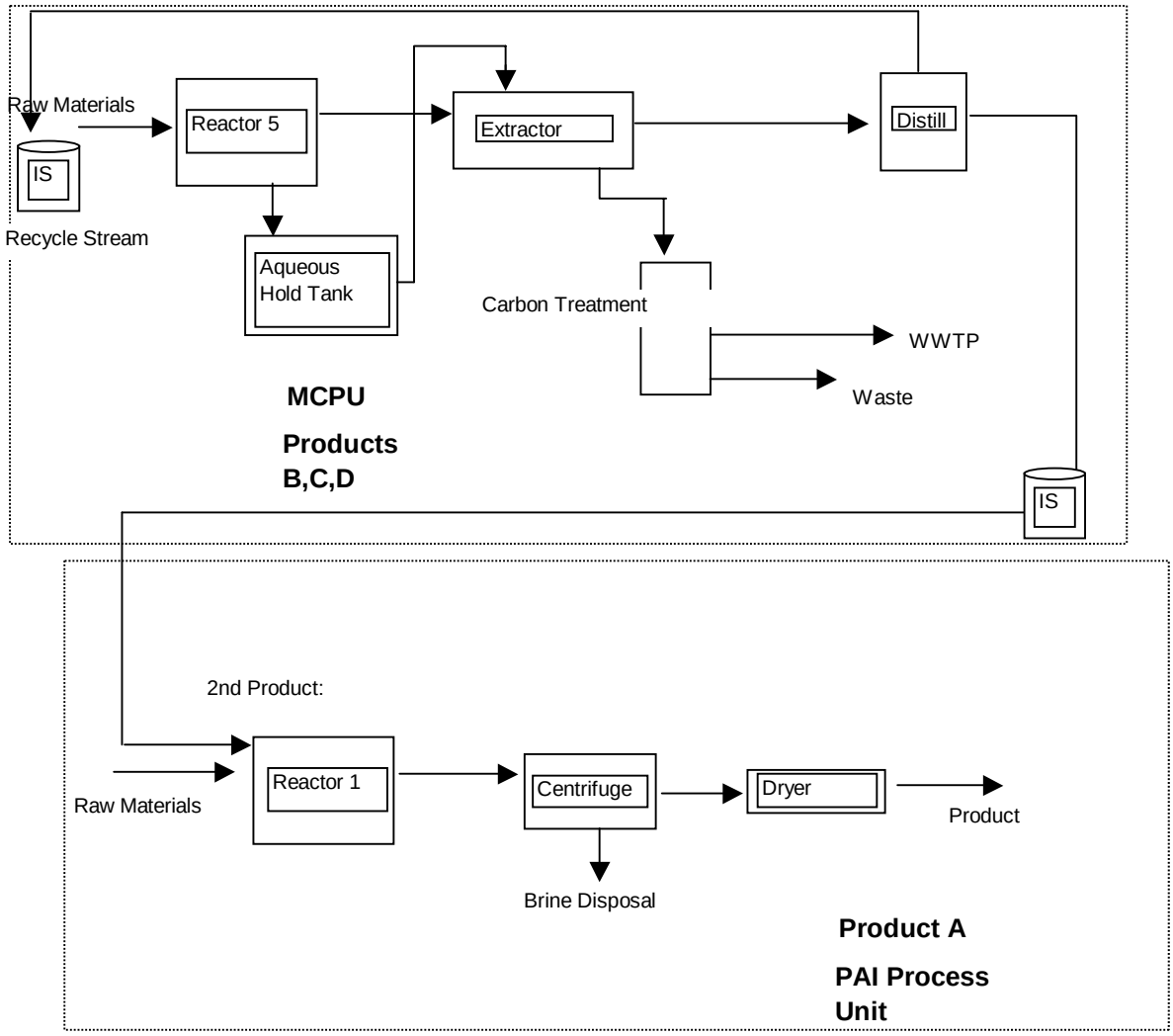


**Figure A-11. Process flow diagram for production in Area 6.**



US EPA ARCHIVE DOCUMENT

**Table A-9. General MACT Requirements for Case Study 6**

| Process | Rule | Process vents | Storage tanks | Equipment leaks | Wastewater | Transfer operations |
|---|---|---|---|---|---|---|
| A | PAI | Yes. Sum of uncontrolled emissions from process vents exceeds 330 lb/yr. | Yes. Methanol storage tank has capacity ≥10,000 gal. | Yes. Components are in HAP service >300 hr/yr. | None | Not applicable |
| B, C, D | MON | Yes. Sum of uncontrolled emissions from process vents exceeds 10,000 lb/yr. | Assigned to Process A | | | No. Loading thresholds are below cutoffs. |

Overlapping Situations and Strategies for Minimizing Overlap

Although there is no specific instance of overlap with respect to pieces of processing equipment, the afterburner system will be subject to two different MACT standards. Because the PAI process follows the production process of the intermediate, there is no overlap in MACT applicability for processing equipment, just the control device. It is unlikely that the PUG approach could be used. In order for the owner or operator to use the PUG concept, the production of the Product B intermediate would have to be designated as a PAI process unit. Then applying the PUG concept for Products B, C, and D might allow compliance with subpart MMM for all four process units in Area 6. This would only work, however, if products A and B could be considered the primary product of the PUG.

If the owner or operator could not take advantage of the PUG concept, a consolidation approach could also be used. Table A-10 illustrates how to consolidate requirements for shared control devices or waste management units in this case. We assume for the sake of this discussion that process vents contain halogenated compounds.

**Table A-10. Overall Consolidation Approach for Case Study 6**

| Emission Source | Consolidation Strategy |
|---|---|
| Process Vents | See detailed listing of consolidated requirements for centralized combustion device in Table A-11 |
| Storage Tanks | Assign tank to subpart FFFF |
| Wastewater | Comply with subpart FFFF; §63.2535(e) |
| Equipment Leaks | Comply with subpart MMM; §63.2535(d) |



US EPA ARCHIVE DOCUMENT

With the exception of process vents, other emission sources can easily be consolidated as presented above. For process vents that are subject to both subparts MMM and FFFF and controlled by one centralized combustion device, there are two basic options: (1) conduct an initial performance test and set appropriate monitoring parameters to demonstrate continuous compliance, or (2) equip the scrubber stack with a CEMS to continuously measure TOC and halogens and hydrogen halides (or, for halogens and hydrogen halides, demonstrate 95 percent removal from the scrubber). The initial compliance test under option 1 must show either (1) 98 percent removal of organic HAP from the combustion device and 99 percent removal of hydrogen halides and halogens from the scrubber following the combustion device or (2) outlet TOC concentrations less than 20 ppmv and outlet hydrogen halide and halogen concentrations less than 20 ppmv). To eliminate monitoring requirements under Option 1 on the scrubbers upstream of the incinerator, the performance demonstration should be conducted when the scrubbers are not operational.

Since the compliance date of subpart FFFF is later than that of subpart MMM, the owner or operator must comply with subpart MMM as written until the compliance date of subpart FFFF, at which time, the facility could report under the subpart FFFF notification of compliance report its intent and strategy to consolidate requirements, and make necessary permit modifications under title V. The provision allowing consolidation is §63.1360(i)(4) in subpart MMM, which prompts the operator to comply with both regulations by implementing a strategy that will assure compliance under both regulations. Appropriate consolidated requirements for each compliance strategy are summarized in Table A-11.

As noted in Tables 1 through 8 in the main body of this document, there are some slight differences in requirements between the two standards; we have concluded that for this case, compliance with the requirements described above will ensure compliance with both standards. We note the following differences and our rationale for selection of the overlying option:

- If complying with the alternative standard for a combustion device controlling halogenated streams, subpart FFFF allows an option for continuous compliance through the monitoring of scrubber operating parameters in lieu of a CEMS; subpart MMM does not. Therefore, consolidation would requires a CEMS for HCl and chlorine.

- If complying with the alternative standard for organic HAP, subpart FFFF requires a correction for supplemental gases to correct outlet concentration to 3 percent $O_2$. Subpart MMM also requires this correction, but provides an alternative consisting of maintaining adequate temperature and residence time. Subpart FFFF provides no such alternative; therefore, compliance with the alternative standard will require the 3 percent correction.

- Subpart FFFF requires the use of appendix F procedure 1 of 40 CFR 60 for CEMS. Subpart MMM does not.

- Subpart FFFF requires continuous monitoring of scrubber pH or caustic strength, while subpart MMM allows daily monitoring.



US EPA ARCHIVE DOCUMENT

- Subpart FFFF requires calibration of parameter monitoring instruments according to manufacturer's specifications, while subpart MMM specifies monitoring frequency and calibration accuracy for some parameter monitors. In order to comply with both standards, an owner or operator would have to monitor at least as frequently and to the accuracy requirements required in subpart MMM and more frequently and to narrower accuracy if the manufacturer's specifications required it. For devices not specified in subpart MMM, the owner or operator would follow manufacturer's specifications as provided in subpart FFFF.

- Subpart MMM requires keeping records of each measurement, not daily or hourly averages.

**Table A-11. Specific Consolidation Approach for Case Study 6**

| Requirement | MACT subparts | | Option 1 | Option 2S |
|---|---|---|---|---|
| | MMM (PhRMA) | FFFF (MON) | | |
| Organic HAP Control Requirement | | ✓ | 98% or to ≤20 ppmv [Table 2 to subpart FFFF] | Alternative Standard: concentration standard of 20 ppmv HAP and 20 ppmv hydrogen halides and halogens [§63.2505] |
| Halogenated Stream Control Requirement | ✓ | | 99% control or hydrogen halides and halogens or to ≤20 ppmv [Tables 1 and 2 to subpart FFFF] | CEMS for $HCl/Cl_2$ monitoring |
| Initial Compliance Demonstration | | ✓ | Initial performance test to demonstrate 98% or 20 ppmv, 99% or 20 ppmv based on worst case | |
| Monitoring | | ✓ | Continuous monitoring of<br>• scrubber liquid flow,<br>• pH or caustic strength<br>• inlet gas flow rate<br>• gas temperature exiting combustion temperature | Continuous monitoring of<br>• TOC concentration using CEMS (also comply with appendix F procedure 1 of 40 CFR part 60)<br>• $HCl/Cl_2$<br>Correct for supplemental gas to 3% $O_2$. [§63.2450(j)(5)] |
| Calibration | ✓ | ✓ | Annual calibration of<br>• temperature monitoring device [§63.1366(b)(1)(vii)] and<br>• scrubber liquid flowrate [§63.1366(b)(1)(ii)], unless manufacturer's specifications are more stringent<br>For all other parametric monitors, calibrate according to manufacturer's specifications. [§63.996(c)(1)] | |
| Recordkeeping | ✓ | | Keep 15-minute monitoring data, not daily or hourly averages [§63.1259(b)(1)] | |



US EPA ARCHIVE DOCUMENT