US EPA ARCHIVE DOCUMENT
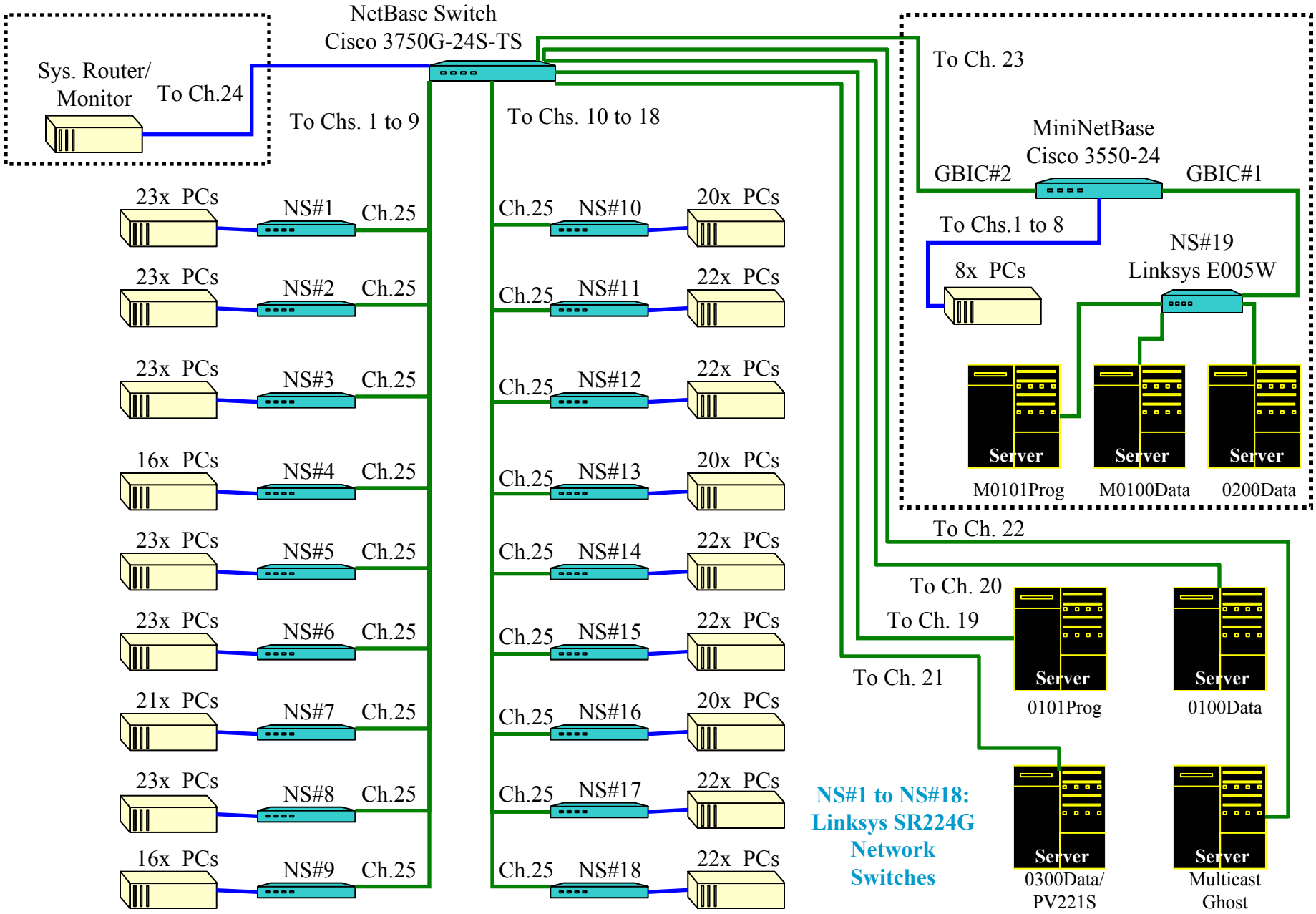
Figure 3A: SuperMUSE Master Network Switch Wiring Details